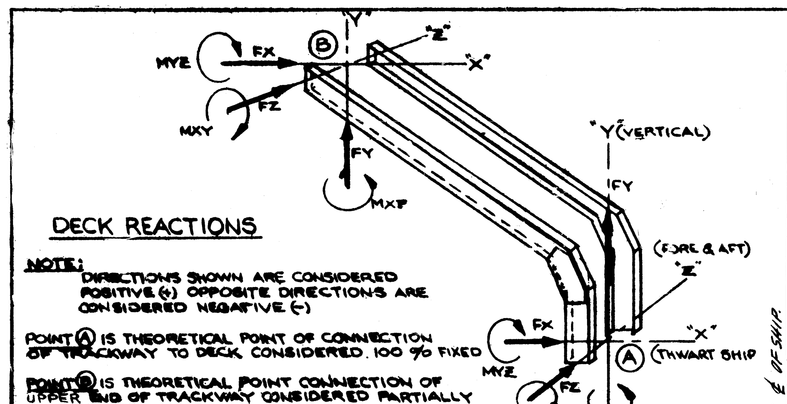

DECK REACTIONS

NOTE: DIRECTIONS SHOWN ARE CONSIDERED POSITIVE (+) OPPOSITE DIRECTIONS ARE CONSIDERED NEGATIVE (-)

POINT (A) IS THEORETICAL POINT OF CONNECTION OF TRACKWAY TO DECK, CONSIDERED 100 % FIXED

POINT (B) IS THEORETICAL POINT CONNECTION OF UPPER END OF TRACKWAY CONSIDERED PARTIALLY FIXED (20 %)

CONDITION I - DAVIT STOWED, FALLS TIGHT, 50 % LOAD (7500 # PER DAVIT SET - 3750 # PER TRACKWAY

CONDITION II - DAVIT OUTBOARD WITH 15° ADVERSE LIST, MAX. LOAD (15000 # PER DAVIT SET 7500 # PER TRACKWAY)

FORCES ARE BASED ON DAVIT TRACKWAY NEAREST WINCH, FORCES ON FAR TRACKWAY ARE SLIGHTLY LESS.

POINT	FORCE IDE.	CONDITION I	CONDITION II	MOMENT IN LBS	CONDITION I	CONDITION II
(A)	Fx	-2519	-7895	Mxy	-69530	-50095
	Fy	+4893	+16461	Myz	NEG.	+105,462 ②
	Fz	—	1302 ①	Mxz	NEG.	+103,368 ②
(B)	Fx	+233	-459	Mxy	-29304	-54987
	Fy	+2460	+3041	Myz	NEG.	NEG.
	Fz	+3750	+3750 ①	Mxz	NEG.	NEG.

① FORCE DUE TO FAIRLEAD OF FALL TO FAR TRACKWAY.
② FORCE & MOMENT DUE TO POSSIBLE 10° TRIM OF VESSEL.

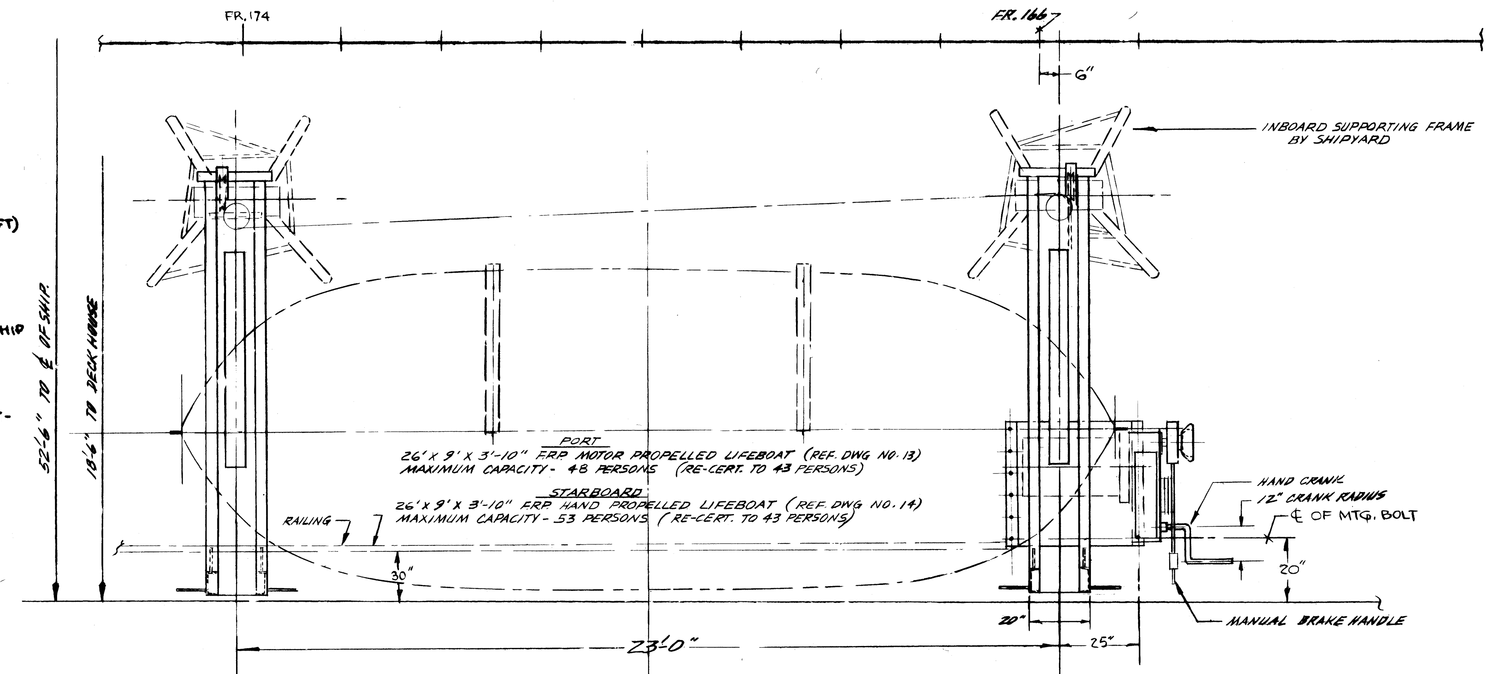

PLAN - STARBOARD SIDE AT BOAT DECK

FORWARD

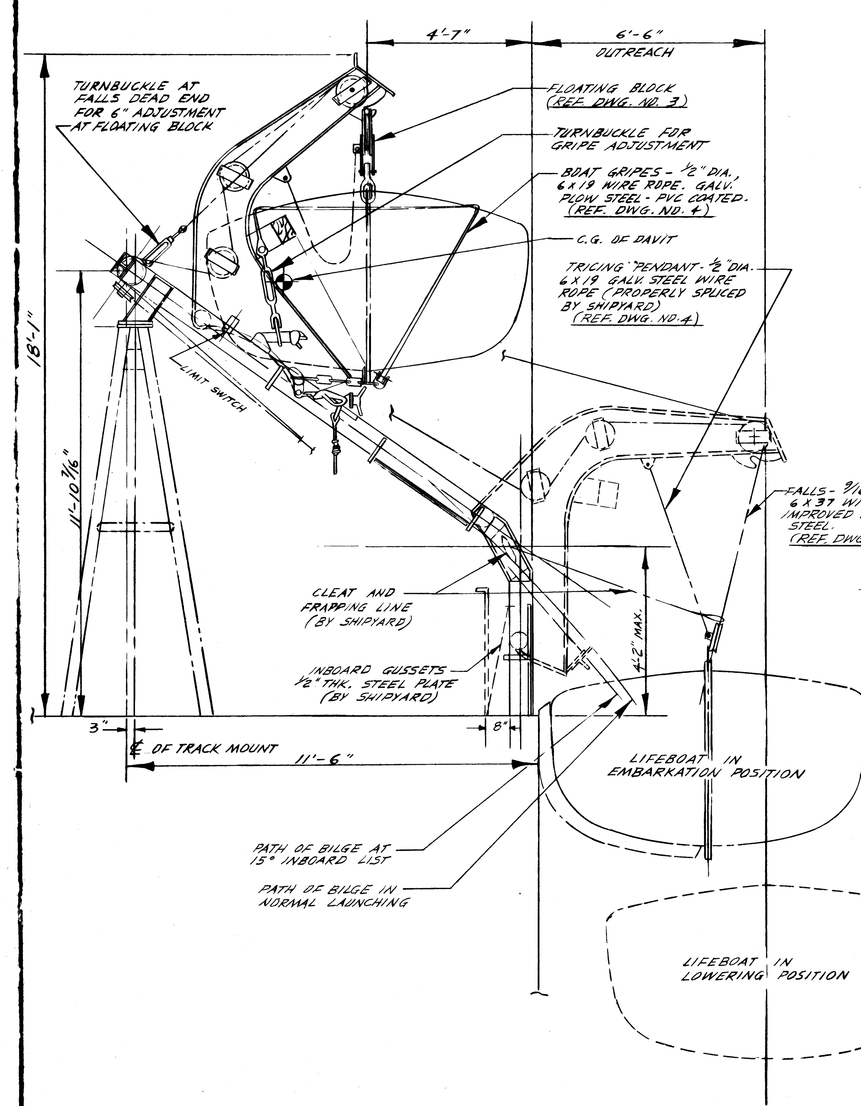

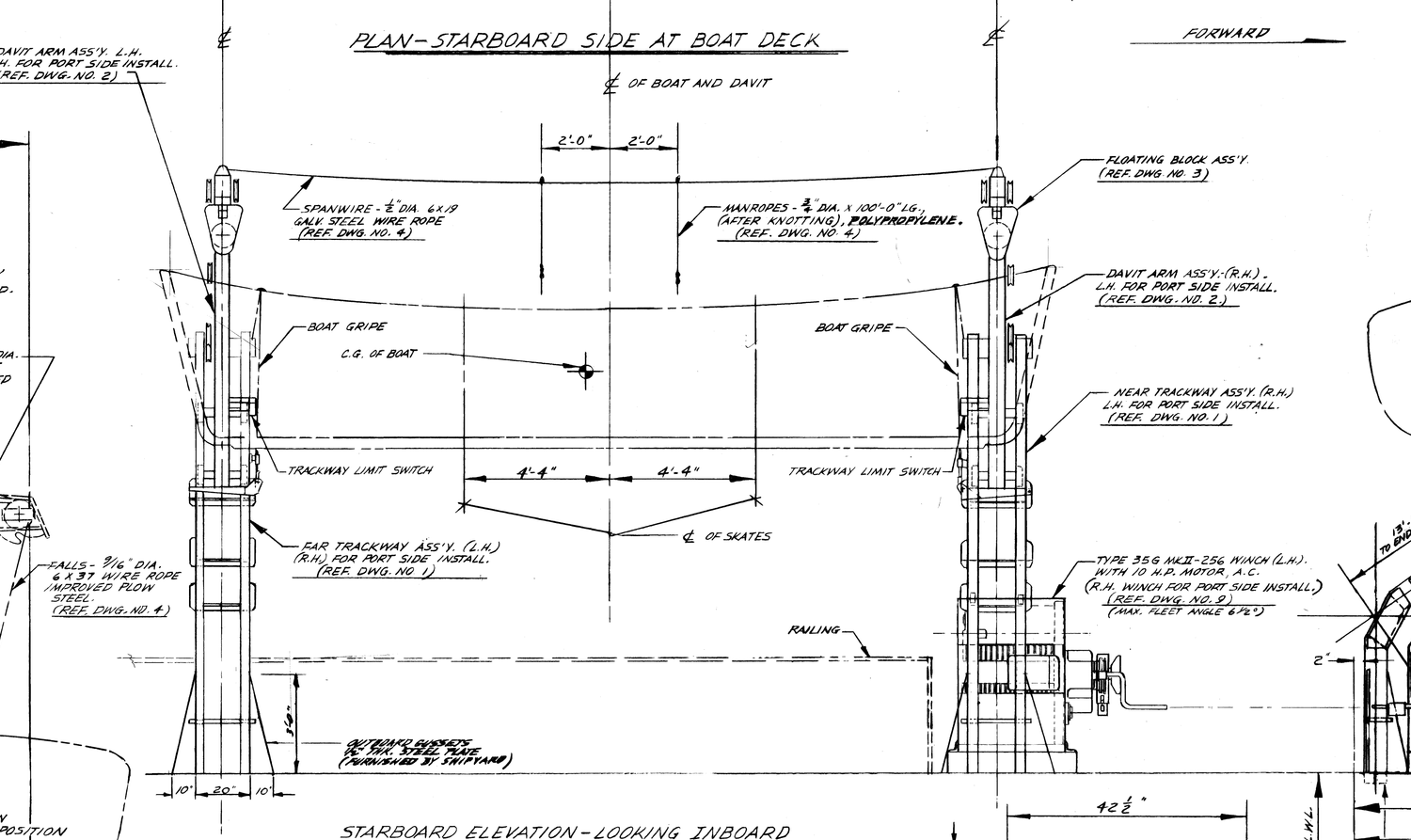

STARBOARD ELEVATION - LOOKING INBOARD

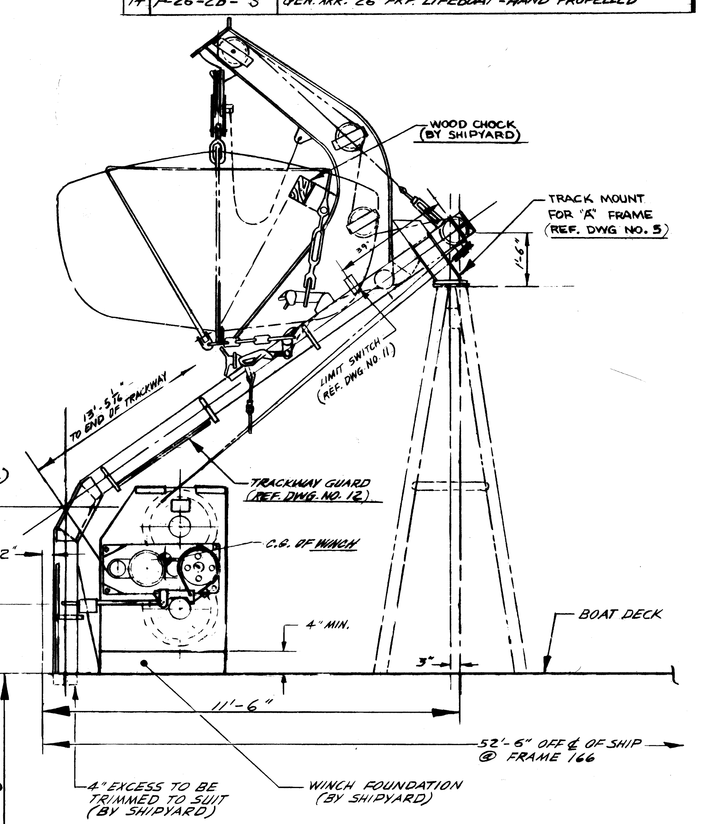

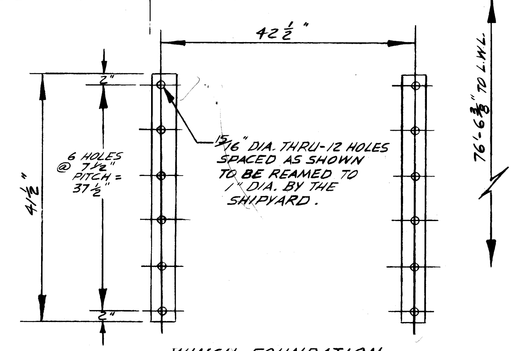

WINCH FOUNDATION
SCALE : 1" = 1'-0"

TABLE OF WEIGHTS			
DESCRIPTION	WEIGHT IN LBS.		
35G MK.II WINCH W/ MOTOR	3,530		
TRACKWAY ASSEMBLY	1,300		
DAVIT ARM ASSEMBLY	1,300		
26 FT. (FRP) LIFEBOAT - DIESEL	COND. A - 4,545	COND. B - 12,741	LBS
26 FT. (FRP) LIFEBOAT - HAND	COND. A - 3,807	COND. B - 11,767	LBS

REVISIONS			
SYM.	DESCRIPTION	DATE	APPROVAL
A	TABLE OF WEIGHTS - DIESEL & HAND PROP. LIFEBOATS COND. "B" CORRECTED.	9-11-74	JMR
B	REF. TO HULL 673 ADDED TO P.O. TABLE REF. DWG. NO. 4 WAS D3-B-8994	10-3-74	JMR
C	REF. TO HULL 674 ADDED TO TABLE	4-7-75	
D	CERTIFICATION DATES APPLICABLE TO HULLS 670, 673 & 674 ADDED.	9-5-75	LEO
E	MANROPES REVISED FROM MANILA TO POLYPROPYLENE TO COMPLY WITH SUN/SHIP LTR. DTD. 6-27-75 RULE 874, 78-2, N-10, P.	11-3-75	TEB.
F	HULL Nº 675 ADDED TO TABLE TO COMPLY WITH SUN/SHIP AMEND Nº 3 DATED 7-15-76 TO P.O. Nº J-55343 N (SHEET Nº 17) 675-790-101.	8-25-76	LEO.

U.S. COAST GUARD CERTIFICATES OF APPROVAL		HULL 670	HULL 673	HULL 674	HULL 675
DESCRIPTION	APPROVAL NO.	DATE	DATE	DATE	DATE
TYPE 26-15 GRAVITY DAVIT	160.032/173/0	3/2/72	3/2/72	3-2-72	3-2-72
TYPE 35G-MK.II WINCH	160.015/93/1	6/8/71	6/8/71	6-8-71	6-8-71
26 (F.R.P.) DIESEL PROP. LIFEBOAT	160.035/460/0	3/26/70	3/26/70	0-5-75	0-5-75
26 (F.R.P.) HAND PROP. LIFEBOAT	160.035/461/0	3/26/70	3/26/70	0-5-75	9-5-75

REFERENCE DRAWINGS		
NO.	DRAWING NO.	DESCRIPTION
1.	D3-F-053-ST	TYPE 26-15 TRACKWAY ASSEMBLY
2.	D3-F-052-S	TYPE 26-15 DAVIT ARM ASSEMBLY
3.	D3-C-093-S	FLOATING BLOCK ASSEMBLY
4.	D3-B-9280	RIGGING, TYPE 26-15 GRAVITY DAVIT
5	D3-D-099-S	TRACK MOUNT FOR "A" FRAME
6	W9-C-010-S	LUBRICATION DIAGRAM - 35G MK.II WINCH
7	D9-B-009-S	LUBRICATION DIAGRAM - 26-15 GRAVITY DAVIT
8	D9-B-008	DESIGN CALCULATIONS - " " "
9	W1-F-003-S	WINCH ARRANGEMENT - 35G MK.II MODEL 256
10	W9-D-005	DESIGN CALCULATIONS - " " " "
11	D3-D-399-S	TYPE CRX LIMIT SWITCH INSTALLATION (CUTLER-HAMMER)
12	D3-C-112-S	TRACKWAY GUARD
13	P-26-2D-S	GEN. ARR. 26' FRP LIFEBOAT - MOTOR PROPELLED
14	P-26-2B-S	GEN. ARR. 26' FRP LIFEBOAT - HAND PROPELLED

GENERAL NOTES

1. WORKING LOAD OF DAVIT IS 7,500 LBS. PER ARM AND 15,000 LBS. PER SET
2. ALL DAVIT AND WINCH FOUNDATIONS BY SHIPYARD.
3. PROTECTION OF WIRE ROPE LEADS AND DRIP GUARDS BY SHIPYARD.
4. TRACKWAY VERTICAL CHANNELS (8" x 21.4#) ARE SUPPLIED 51 7/16 LG., TO BE TRIMMED AND FITTED BY SHIPYARD. (SEE REF. DWG. NO. 1).
5. PAINTING OF LIFEBOATS:
   (a) EXTERIOR TO BE PIGMENTED WHITE
   (b) INTERIOR TO BE PIGMENTED INTERNATIONAL ORANGE.
6. PAINTING OF DAVITS AND WINCHES - ALL EXTERIOR SURFACES WHICH ARE NOT GALVANIZED OR STAINLESS STEEL ARE TO BE:
   (a) SANDBLASTED TO WHITE METAL IMMEDIATELY PRIOR TO COATING OPERATION, THEN APPLY ONE (1) COAT OF AMERCOTE # 6, APPROXIMATELY 3 MIL THICKNESS AND ONE (1) COAT OF AMERCOAT PRIMER NO. 86 OF APPROXIMATELY 1 MIL THICKNESS.
   (b) GALVANIZED SURFACES SHALL BE WASHED WITH LITHIUM HYDROXIDE AND NEUTRALIZED WITH FRESH WATER BEFORE PAINTING WITH ONE (1) COAT OF VINYL ZINC CHROMATE.
   (c) GEARS ON THE WINCH ARE TO BE FLUSHED WITH A SUITABLE RUST PREVENTATIVE.
   (d) ALL OTHER COATS OF PAINT TO BE DONE BY THE SHIPYARD AFTER INSTALLATION.

SUN SHIP PURCHASE ORDER DATA		
SUN P.O. NO.	SUN HULL NO.	MASECO S/O
J-44589-7	670	8992-9000
J-51497-J	673	9278-9286
J-50081-J	674	9247-9255
J-55343-J	675	0414

674 - 675

MATERIAL		FINISH	HEAT TREAT. ——— WEIGHT
DIMENSIONAL TOLERANCES UNLESS OTHERWISE SPECIFIED: FRACT. ± 1/64; DEC. ± .008; ANG. ± 30'	TITLE: DECK LAYOUT FOR TYPE 26-15 GRAVITY DAVIT TYPE 35G-MK.II WINCH 26 FT. FIBERGLASS LIFEBOATS		MARINE SAFETY EQUIPMENT CORP. FARMINGDALE, N.J.
SCALE 1/2" = 1'-0"	DRAWN J.M. ROBINSON DATE 6/6/76	SIZE F	DRAWING NUMBER D1-F-0645 ISSUE F
NEXT ASSY.	CHECKED DATE		
	APPROVED DATE		

FR1 DRB