Bridge Factors Factual Report Attachment 70 – FIU Superstructure – Longitudinal & Transverse RFC Design Calculations

Miami, FL

HWY18MH009

(1,457 pages)

SUPERSTRUCTURE - LONGITUDINAL & TRANSVERSE RFC DESIGN CALCULATIONS

UniversityCity Prosperity Project
Pedestrian Bridge

FIGG Project No: 2262.03
FPID No: 434688.1.58.01

April 2017

Signature Bridge for
FIU & Sweetwater (Rendering)

CALCULATION COVER SHEET

Calculation Title: Superstructure – Longitudinal & Transverse

Calculation Number: 1

Total Number of Pages (including cover sheet): 1455

Total Number of Computer Runs: 1

Prepared by: EDL Date: 4/11/2017

Checked by: MF Date: 4/11/2017

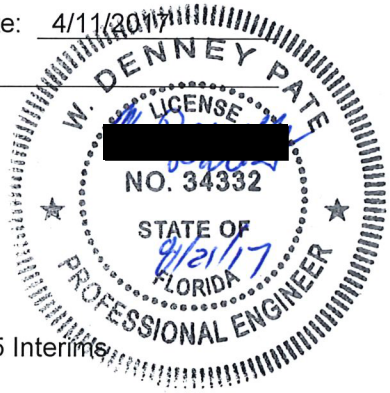

Description and Purpose:

RFC design calculations for the superstructure.

Design Basis/References/Assumptions

- AASHTO LRFD Bridge Design Specifications, 7th Edition (2014) with 2015 Interims
- FDOT Structures Design Guidelines, January 2015
- AASHTO LRFD Guide Specifications for the Design of Pedestrian Bridges, 2nd Edition (2009)
- RFC Foundation Plans General Notes 1 (Sheet B-2)

Remarks/Conclusions/Results:

The superstructure was found to be adequate according to the project design criteria.

Calculation Approved by: [redacted] 9/21/17

Design Task Manager Date

Revision No.:	Description of Revision:	Approved by: Design Manager	Date:

Written by: ADH	Revised by:	Approved by:
Date: 04.21.16	Date:	Date:

TABLE OF CONTENTS

I. DESIGN SUMMARY

II. GENERAL NOTES

III. LARSA MODELS

- LONGITUDINAL MODEL
- MAIN SPAN ERECTION

IV. CONSTRUCTION CHECK

- DECK & CANOPY STRESSES

V. LONGITUDINAL DESIGN

- DECK & CANOPY STRESSES
- CANOPY BUCKLING CHECK
- TRUSS DESIGN
- DIAGONALS BUCKLING CHECK
- ULTIMATE MOMENT CALCULATIONS

VI. TRANSVERSE DESIGN

- DECK & CANOPY

VII. NODAL ZONES DESIGN

VIII. NORTH LANDING OVERLOOK DESIGN

IX. FREQUENCY ANALYSIS

X. FINITE ELEMENT ANALYSIS

XI. DRAWINGS

I. DESIGN SUMMARY

I. DESIGN SUMMARY

FIGG

Design Summary

Project: FIU Pedestrian Bridge

Project No. : 2262.03

Design Task: Superstructure Design

Designer: Eddy D. Leon

Design Summary:

This section contains the calculations performed for the longitudinal and transverse design of the superstructure for the FIU Pedestrian Bridge. The calculations were prepared in accordance with the project design criteria, AASHTO LRFD Bridge Design Specifications 7th Edition with 2015 Interim Revisions, AASHTO LRFD Guide Specifications for the Design of Pedestrian Bridges, 2nd edition (2009), and FDOT Structures Design Guidelines (January 2015).

The superstructure was analyzed with the LARSA 4D (V7.08.r05) program to include the effects of staged construction and time dependent material properties (creep, shrinkage, and PT losses). The model includes construction activities that coincide with each stage of the erection process. Externally applied loads were calculated by hand and applied to the model at the appropriate stages. In addition to this, a finite element model was developed with the LUSAS program in order to verify the results from LARSA.

Service I (compressive) and Service III (tensile) stresses were computed at the extreme points of the deck and canopy (top fiber and bottom fiber) and checked against the allowable stresses. Stresses were checked at two stages, end of construction (EOC) and long term (LT, day 10,000). A construction LARSA model was also developed to analyze the stresses during the erection of the main span. The number of longitudinal tendons was determined by keeping stresses within the allowable limit of three times the square root of the concrete compressive stress for the Service III limit state (see Summary Table 1).

Summary Table 1						
	Main Span			Back Span		Full Bridge Length
	Deck		Canopy	Deck	Canopy	Canopy
Size of Tendon	12k6	19k6	12k6	19k6	12k6	12k6
Total # Tendons	2	10	4	6	2	4

Service III stresses were also computed for the truss diagonal members and used to determine the required amount of post-tensioning (PT bars) in these members. Tension stresses were kept below three times the square root of the concrete compressive stress. Service I stresses were then calculated including the effect of the PT bars and checked against the allowable compressive stress of 0.45 times the concrete compressive stress. See Summary Table 2 for a summary of the number and size of PT bars provided in each diagonal member.

Summary Table 2		
Member No.	**SIZE OF PT BAR (in)**	**No. PT BARS PROVIDED**
2	1-3/4	2
3	1-3/4	4
5	1-3/8	2
6	1-3/4	2
7	1-3/4	1
8	1-3/4	4
10	2-1/2	4
11	1-3/4	2
15	1-3/4	4
16	1-3/8	1
17	1-3/8	4
18	1-3/8	1
19	1-3/8	2
20	1-3/8	1
21	1-3/8	2
22	1-3/8	2
23	1-3/8	2

Ultimate moment capacity calculations were performed for the diagonal members in compression using the in-house program of PT Column. Strength and Service Limit States load combinations were considered. Shear calculations were also performed for the truss members per AASHTO LRFD 5.8.3.3.

Buckling of the canopy and diagonal members was checked per AASHTO LRFD 4.5.3.2.2b-5.

The transverse design of the deck was performed by hand calculations taking the deck as a cantilever beam fixed at the face of the truss member towards the center of the deck. All loads were calculated on a per foot basis to determine the amount of transverse post-tensioning in a foot. Stresses on bottom and top of deck were checked against allowable stresses. The transverse design of the

canopy was performed in a similar way. Flexure capacity calculations were performed in order to determine the required transverse tension steel on the top of the canopy. Temperature and shrinkage reinforcement was calculated per AASHTO LRFD 5.10.8 for the reinforcement provided in all other faces.

The nodal zones of the superstructure were designed for interface shear transfer between the interface of the diagonals with the deck and canopy. AASHTO LRFD 5.8.4 was used. Shear forces at the nodal regions were extracted from the LUSAS finite element model. The required size of the interface shear reinforcement was calculated for the critical region and provided conservatively to all regions.

The design of the north landing overlook was performed by hand calculations where the ultimate moment was calculated to determine the amount of flexural steel on the top of the beam. The amount of shear reinforcement throughout the beam was also calculated. Torsional effects were investigated for the case where the pedestrian live load would be only on one side of the bridge deck.

LARSA was also used to investigate the vibrations of the pedestrian bridge. Per ASSHTO LRFD Guide Specifications for the Design of Pedestrian Bridges, the fundamental frequency in a vertical mode of a pedestrian bridge without live load shall be greater than 3.0 hertz to avoid the first harmonic. In the lateral direction, the fundamental frequency shall be greater than 1.3 hertz. Our results show a vertical frequency of 3.07 hertz and lateral frequency of 2.22 hertz for the structure.

II. GENERAL NOTES

II. GENERAL NOTES

GENERAL NOTES

CONSTRUCTION SPECIFICATIONS:

1. FLORIDA DEPARTMENT OF TRANSPORTATION STANDARD SPECIFICATIONS FOR ROAD AND BRIDGE CONSTRUCTION 2015.
2. AMERICAN ASSOCIATION OF STATE HIGHWAY AND TRANSPORTATION OFFICIALS (AASHTO) LRFD BRIDGE CONSTRUCTION SPECIFICATIONS, SECOND EDITION, 2004 WITH INTERIMS THROUGH 2006.

DESIGN SPECIFICATIONS:

1. AMERICAN ASSOCIATION OF STATE HIGHWAY AND TRANSPORTATION OFFICIALS (AASHTO) LRFD BRIDGE DESIGN SPECIFICATIONS SEVENTH EDITION WITH 2015 INTERIMS.
2. FDOT STRUCTURES DESIGN MANUAL, JANUARY 2015.
3. AASHTO LRFD GUIDE SPECIFICATIONS FOR DESIGN OF PEDESTRIAN BRIDGES, SECOND EDITION (2009).
4. CEB-FIP MODEL CODE, FIRST EDITION, 1990, TIME DEPENDENT BEHAVIOR OF CONCRETE, CREEP AND SHRINKAGE.
5. AASHTO/AMERICAN WELDING SOCIETY (AWS) D1.5 BRIDGE WELDING CODE (2005).
6. 28 CODE OF FEDERAL REGULATIONS PART 36, 2010 AMERICANS WITH DISABILITIES ACT (ADA) STANDARDS FOR ACCESSIBLE DESIGN.
7. AASHTO GUIDE FOR THE DEVELOPMENT OF BICYCLE FACILITIES, 1999.
8. BUILDING CODE REQUIREMENTS FOR STRUCTURAL CONCRETE, ACI 318-14.
9. BUILDING CODE REQUIREMENTS FOR MASONRY STRUCTURES, TMS 402-13 CODE.

DESIGN METHODS:

LOAD AND RESISTANCE FACTOR DESIGN METHOD (LRFD).

DESIGN LOADINGS:

1. DEAD LOAD

UNIT WEIGHT OF REINFORCED/PRESTRESSED CONCRETE	150 PCF
UNIT WEIGHT OF STRUCTURAL STEEL	490 PCF
PEDESTRIAN FENCE ALLOWANCE (EACH SIDE)	200 PLF
OVERLAY ALLOWANCE	6.25 PSF
UTILITIES ALLOWANCE	350 PLF

2. LIVE LOAD

PEDESTRIAN LOADING 90 PSF

3. FUTURE WEARING SURFACE

ALLOWANCE FOR FUTURE WEARING SURFACE IS NOT PROVIDED.

4. STAY-IN-PLACE FORMS

THE USE OF STAY-IN-PLACE FORMS IS NOT PERMITTED.

5. WIND LOADS

WIND LOAD FOR STRUCTURAL MEMBERS WAS COMPUTED IN ACCORDANCE WITH FDOT STRUCTURES DESIGN GUIDELINES. THE GUST FACTOR FOR THE PYLON IS EQUAL TO 0.86.

6. THERMAL LOADS

NORMAL MEAN TEMPERATURE:	70° F
THERMAL COEFFICIENT:	6.0x10 $^{-6}$/°F (CONCRETE)
TEMPERATURE RANGE FOR DESIGN OF STRUCTURES:	
RISE: 35° F (CONCRETE)	
FALL: 35° F (CONCRETE)	

7. EARTHQUAKE EFFECTS

BRIDGE IS DESIGNED TO MEET THE MINIMUM BEARING SUPPORT. EARTHQUAKE EFFECT WAS COMPUTED IN ACCORDANCE WITH SECTION 2.3 OF THE STRUCTURE DESIGN GUIDELINES.

8. VEHICULAR COLLISION

THE PYLON BASE SUPPORTING THE BRIDGE IS DESIGNED TO RESIST A 600K IMPACT LOAD PER FDOT 2015 STRUCTURE DESIGN GUIDELINES.

9. VIBRATION

THE STRUCTURE SATISFIES THE HORIZONTAL AND VERTICAL VIBRATION CRITERIA SPECIFIED IN CHAPTER 6 OF THE AASHTO LRFD PEDESTRIAN BRIDGE SPECIFICATIONS.

SCREEDING DECK SLABS:

THE DECK SHALL BE SCREEDED TO CREATE THE TRANSVERSE SLOPE SHOWN IN THE PLANS. APPLY A CLASS 4 DECK FINISH TO ALL WALKING SURFACES IN ACCORDANCE WITH SECTION 400-15.2.5.2 OF THE SPECIFICATIONS. GRIND UP TO ¼" TO ENSURE A UNIFORM TEXTURE OF THE FINAL COMPLETED STRUCTURE.

DECK FINISH:

PROFILING OF BRIDGE DECK SURFACE SHALL NOT BE REQUIRED. GRIND ALL SURFACE IRREGULARITIES IN ACCORDANCE WITH SECTION 400-15.2.5.4 OF THE SPECIFICATIONS.

SCOUR:

SCOUR WILL BE CONSIDERED IN THE DESIGN OF THE SUBSTRUCTURE WITH SCOUR ELEVATION BASED ON THE 100 AND 500 YEAR FLOOD EVENT.

UTILITIES:

UTILITIES ON THE BRIDGE ARE LIMITED TO ELECTRICAL SYSTEMS TO SUPPORT THE LIGHTING.

CONCRETE:

1. ALL CONCRETE SHALL BE IN ACCORDANCE WITH SECTION 346 OF THE STANDARD SPECIFICATIONS, OR AS MODIFIED BY THE ENGINEER.

CLASS	MINIMUM 28 DAY COMPRESSIVE STRENGTH	LOCATION
VI	8500 PSI	SUPERSTRUCTURE, PYLON
V (SPECIAL)	6000 PSI	PRECAST PILE
IV	5500 PSI	FOOTINGS, PIERS, PIER PROTECTION BARRIER

2. PROVIDE ¾" X ¾" CHAMFER ON ALL EXPOSED EDGES, UNLESS NOTED OTHERWISE.
3. CONSTRUCTION JOINTS WILL BE PERMITTED ONLY AT LOCATIONS INDICATED ON THE PLANS. ADDITIONAL CONSTRUCTION JOINTS OR ALTERATIONS TO THOSE SHOWN SHALL REQUIRE WRITTEN APPROVAL OF THE ENGINEER.
4. FINISH COATING: A CLASS 1 SURFACE FINISH SHALL BE APPLIED TO THE SUPERSTRUCTURE (EXCEPT THE TOP DECK) AND A CLASS 3 SURFACE FINISH SHALL BE APPLIED TO THE PIERS AND PYLON FACES.

PRESTRESSING STRANDS:

STRANDS - ASTM A416, GRADE 270, LOW RELAXATION

STRAND DIAMETER	0.6 INCH
MODULUS OF ELASTICITY	28,500 KSI
MAXIMUM JACKING STRESS	218.7 KSI
MAXIMUM ANCHORING STRESS	
AWAY FROM ANCHORAGES	199.8 KSI
AFTER ANCHOR SET AT ANCHOR	189.0 KSI
ANCHOR SET	0.375 INCH
FRICTION COEFFICIENT	0.23 (PLASTIC DUCT)
WOBBLE COEFFICIENT	0.00020 PER FT. (INTERNAL)

PRESTRESSING BARS:

BARS - ASTM A722, GRADE 150

APPARENT MODULUS:	29,000 KSI
MAXIMUM JACKING STRESS:	120 KSI (80% GUTS)
MAXIMUM ANCHORING STRESS:	105 KSI (70% GUTS)
AFTER ANCHOR SET	105 KSI (70% GUTS)
ANCHOR SET	0

POST-TENSIONING DUCTS:

THE TYPE AND MATERIAL OF DUCT SHALL COMPLY WITH SECTION 462 OF THE FDOT SPECIFICATIONS.

STRUCTURAL STEEL:

1. MATERIAL PROPERTIES FOR STRUCTURAL STEEL SHALL BE DETERMINED IN ACCORDANCE WITH THE SPECIFICATIONS SECTION 962.
2. ALL STEEL ELEMENTS SHALL BE FURNISHED AND INSTALLED IN ACCORDANCE WITH SPECIFICATIONS SECTION 460.
3. FOR ALL MISCELLANEOUS STEEL ITEMS PERMANENTLY CAST IN THE DECK, USE GALVANIZED STEEL, STAINLESS STEEL, OR APPROVED COATING SYSTEM.

REINFORCING STEEL:

ALL REINFORCING STEEL SHALL BE ASTM A615, GRADE 60.

ENVIRONMENT:

SUPERSTRUCTURE:	MODERATELY AGGRESSIVE
SUBSTRUCTURE:	MODERATELY AGGRESSIVE (CONCRETE)
	EXTREMELY AGGRESSIVE (STEEL)
LOCATION:	URBAN

CONCRETE COVER:

CONCRETE COVER SHOWN IN THE PLANS DOES NOT INCLUDE REINFORCEMENT PLACEMENT AND FABRICATION TOLERANCES UNLESS SHOWN AS "MINIMUM COVER". SEE FDOT STANDARD SPECIFICATIONS FOR ALLOWABLE REINFORCEMENT PLACEMENT TOLERANCES. UNLESS OTHERWISE NOTED, MINIMUM COVER SHALL BE AS FOLLOWS:

LOCATION	COVER
CANOPY (TOP)	2¼"
CANOPY (OTHER)	2"
DECK (TOP)	2¼"
DECK (OTHER)	2"
DIAGONALS	2"
BEARING PEDESTALS	2"
LANDING PIERS	3"
PYLON BASE	3"
UPPER PYLON	2"

FOOTINGS	
LOCATION	COVER
CAST AGAINST EARTH (BRIDGE)	4"
CAST AGAINST EARTH (BUILDING)	3"
CAST AGAINST FORMED SURFACES	3"

DIMENSIONS AND ELEVATIONS:

1. ALL DIMENSIONS ARE IN FEET AND INCHES EXCEPT AS NOTED.
2. ALL DIMENSIONS ARE MEASURED HORIZONTALLY AND VERTICALLY UNLESS NOTED OTHERWISE.
3. ALL ELEVATIONS ARE IN FEET AND ARE BASED ON 1929 NATIONAL GEODETIC VERTICAL DATUM (NGVD29).

FUTURE BEARING REPLACEMENT:

1. JACK LOCATIONS AND ESTIMATED LOADS ARE FOR USE IN THE EVENT THAT IT BECOMES NECESSARY TO REPLACE THE BEARING PADS.
2. THE JACKING OPERATION SHALL BE PERFORMED SUCH THAT THE DECK AT A PIER IS LIFTED SIMULTANEOUSLY. JACKING SHALL CONTINUE UNTIL THE BEARING PADS CAN BE FREED BUT IN NO CASE SHALL THE CLEAR SPACE BETWEEN THE DECK AND THE BEARING EXCEED ½".
3. JACKS SHALL BE EQUIPPED WITH LOCKING RINGS THAT WILL PREVENT MOVEMENT IN THE EVENT HYDRAULIC PRESSURE IS LOST. JACKS SHALL BE LOCKED OFF PRIOR TO REMOVAL OF THE BEARING PADS.
4. SHIM PLATES SHALL BE PROPERLY SIZED TO LIMIT THE ULTIMATE BEARING STRESS ON CONCRETE ACCORDING TO ARTICLE 5.7.5 OF THE AASHTO LRFD SPECIFICATIONS.
5. DURING PAD REPLACEMENT, BRIDGE SHALL BE KEPT OPEN WITH REDUCED LIVE LOAD.

ENVIRONMENTAL:

1. THIS PROJECT CROSSES THE SFWMD TAMIAMI (C-4) CANAL. TURBIDITY LEVELS BEYOND THE CONTROL MECHANISMS ARE NOT ALLOWED TO EXCEED 29 (NTU'S) ABOUT NATURAL BACKGROUND LEVELS. THE DISCHARGE OF ANY FOREIGN MATERIAL INTO THE WATER SHALL NOT BE PERMITTED.
2. THE CONTRACTOR SHALL COMPLY WITH ALL CONDITIONS OF THE ENVIRONMENTAL AND RIGHT OF WAY PERMITS WHICH ARE PART OF THIS PROJECT.
3. ANY MATERIAL STOCKPILED FOR PERIODS GREATER THAN 24 HOURS SHALL BE PROTECTED BY APPROPRIATE EROSION CONTROL DEVICES.
4. THE CONTRACTOR SHALL REVIEW ENVIRONMENTAL REQUIREMENTS OF ANY PROPOSED STAGING AREAS WITH THE FIU ENGINEER (JOSE E. MORALES, BOLTON PEREZ & ASSOCIATES, 786-539-9629) AT LEAST SEVENTY-TWO (72) HOURS PRIOR TO USE.
5. NO STAGING OR OTHER ACTIVITIES FOR THIS PROJECT WILL BE ALLOWED WITHIN OR ADJACENT TO THE BROTHER'S TO THE RESCUE MEMORIAL PLAZA, JAMES M. BEASLEY LINEAR PARK EAST OF SW 109TH AVE, THE TAMIAMI CANAL EAST OF SW 109TH AVENUE, OR THE HISTORIC SWEETWATER BRIDGE.
6. NO STAGING OR OTHER ACTIVITIES FOR THIS PROJECT WILL BE ALLOWED WITHIN OR ADJACENT TO JAMES M. BEASLEY LINEAR PARK WEST OF SW 109TH AVE OR THE TAMIAMI CANAL WEST OF SW 109TH AVENUE, EXCEPT AS SPECIFICALLY SHOWN IN THE PLANS AND APPROVED BY THE REGULATORY AGENCIES.

W. DENNEY PATE LICENSE [redacted] NO. 34332 STATE OF FLORIDA 11/9/16 PROFESSIONAL ENGINEER

REVISIONS

DATE	BY	DESCRIPTION	DATE	BY	DESCRIPTION

ENGINEER OF RECORD:
FIGG
424 North Calhoun Street
Tallahassee, Florida 32301
FLORIDA CERTIFICATE OF AUTHORIZATION NO. 5618
W. DENNEY PATE, P.E. - P.E. NO. 34332

DRAWN BY:	CHECKED BY:	DESIGNED BY:	CHECKED BY:
DCB	MF	MF	WDP

FIU FLORIDA INTERNATIONAL UNIVERSITY

ROAD NO.	COUNTY	PROJECT ID
	MIAMI-DADE	434688-1-58-01

SHEET TITLE: GENERAL NOTES (1 OF 2)

PROJECT NAME: UNIVERSITYCITY PROSPERITY PROJECT

SHEET NO. B-2

III. LARSA MODELS

- LONGITUDINAL MODEL
- MAIN SPAN ERECTION

FIGG

Superstructure Longitudinal Model

424 North Calhoun Street
Tallahassee, Florida 32301
Tel: 850.224.7400

TABLE OF CONTENTS

INPUTS	Page#	Results	Page#
- INPUT : Material Properties	Page 4		
- INPUT : Spring Properties	Page 4		
- INPUT : Pylon Stiffness Matrix	Page 4		
- INPUT : Sections	Page 4		
- INPUT : Section Stress Points	Page 5		
- INPUT : Section Dimensions	Page 6		
- INPUT : Joints	Page 7		
- INPUT : Members	Page 14		
- INPUT : Springs	Page 22		
- INPUT : Slave/Masters	Page 23		
- INPUT : Tendons	Page 23		
- INPUT : CEB-FIP 78	Page 24		
- INPUT : More Material Properties	Page 24		
- STRUCTURE GROUP SUMMARY	Page 209		
- Load Cases	Page 213		
- Stage Summary	Page 515		

Graphics View 1

Zoom 2.441X

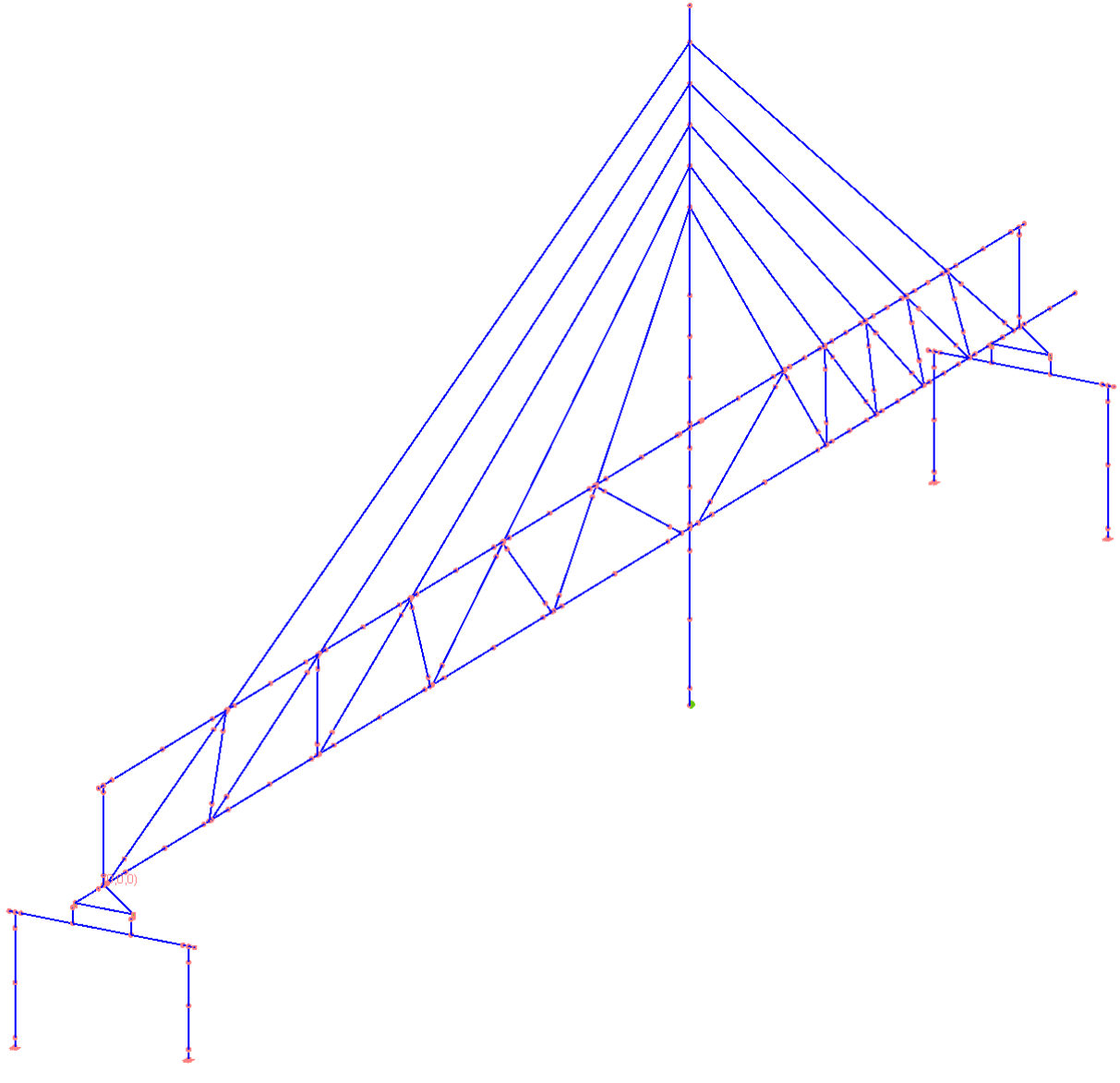

INPUT : Material Properties

Name	Modulus of Elasticity (kips/ft²)	Poisson Ratio	Shear Modulus (kips/ft²)	Unit Weight (kips/ft³)	Thermal Expansion (1/ °F *10^-6)	Assigned
Rigid	688,462.70	0.2000	286,859.46	0.0000	0.000000	Yes
Steel Pipe	4,176,000.00	0.3000	1,606,153.85	0.4900	6.500000	Yes
Steel PT	4,104,000.00	0.3000	1,578,461.54	0.4900	0.000000	Yes
f'c_5.5	553,799.20	0.2000	230,749.67	0.1500	6.000000	Yes
f'c_8.5ksi	688,462.70	0.2000	286,859.46	0.1500	6.000000	Yes

INPUT : Spring Properties

Name	Type	Backbone	Polygonal Hysteretic Model	Alpha	Beta 1	Beta 2	Gamma	Mu	Assigned	Number of Points
Pylon	6x6 Stiffness Matrix	n/a	n/a	n/a	n/a	n/a	n/a	n/a	Yes	n/a

INPUT : Pylon Stiffness Matrix

Translation X	Translation Y	Translation Z	Rotation X	Rotation Y	Rotation Z
24,595.0000	-12.0000	34.0000	1,319.0000	-2.0810e5	4,845.0000
	31,543.0000	593.0000	28,914.0000	-106.0000	-3,512.0000
		82,627.0000	-42,197.0000	41,446.0000	-1,472.0000
			3.3675e8	1.2731e5	-2,393.0000
				2.7685e8	-2.9056e5
					2.2895e8

INPUT : Sections

Name	Section Area (ft²)	Shear Area in yy (ft²)	Shear Area in zz (ft²)	Torsion Constant (ft^4)	Inertia Izz (ft^4)	Inertia Iyy (ft^4)	Plastic Modulus Zyy (ft³)	Plastic Modulus Zzz (ft³)	Perimeter (ft)	Material Time-Effect	Ductility	Residual Strength (%)	Assigned
Rigid Link	3,000.0000	3,000.0000	3,000.0000	20,000.0000	70,000.0000	70,000.0000	0.0000	0.0000	0.0000	(NONE)	50.	0.	Yes
Rigid Link 2	3.0000e5	3.0000e5	3.0000e5	2.0000e6	7.0000e6	7.0000e6	0.0000	0.0000	0.0000	(NONE)	50.	0.	No
Stay Pipe	0.4568	0.4117	0.4117	0.1698	0.0849	0.0849	0.0000	0.0000	4.1888	(NONE)	50.	0.	Yes
Concrete Truss_diagonal	3.5000	2.9167	2.9167	1.6798	0.8932	1.1667	0.0000	0.0000	7.5000	(NONE)	50.	0.	Yes
Concrete Truss_diagonal 2	6.1250	5.1042	5.1042	4.2955	1.5632	6.2526	0.0000	0.0000	10.5000	(NONE)	50.	0.	No
End Diagonal	5.2500	4.3750	4.3750	3.3994	1.3398	3.9375	0.0000	0.0000	9.5000	(NONE)	50.	0.	Yes

INPUT : Sections

Name	Section Area (ft²)	Shear Area in yy (ft²)	Shear Area in zz (ft²)	Torsion Constant (ft^4)	Inertia Izz (ft^4)	Inertia Iyy (ft^4)	Plastic Modulus Zyy (ft³)	Plastic Modulus Zzz (ft³)	Perimeter (ft)	Material Time-Effect	Ductility	Residual Strength (%)	Assigned
Pier 2 Base	60.0000	50.0000	50.0000	449.2800	500.0000	180.0000	0.0000	0.0000	32.0000	(NONE)	50.	0.	Yes
Pier 2 Base Middle	84.5000	70.4167	70.4167	738.8680	1,396.6461	253.5000	0.0000	0.0000	40.1667	(NONE)	50.	0.	Yes
Pier 2 Top	109.0000	90.8333	90.8333	1,033.9740	2,997.7523	327.0000	0.0000	0.0000	48.3333	(NONE)	50.	0.	Yes
End Piers Cap	25.0000	20.8333	20.8333	88.1250	52.0833	52.0833	0.0000	0.0000	20.0000	(NONE)	50.	0.	Yes
End Piers Colum	10.0000	8.3333	8.3333	9.9600	3.3333	20.8333	0.0000	0.0000	14.0000	(NONE)	50.	0.	Yes
Truss Top Chord-16ft wide	16.4607	16.4607	16.4607	5.3100	352.4200	2.6925	0.0000	0.0000	34.8773	(NONE)	0.	0.	Yes
Truss Bottom Chord-31ft 8in_wide	45.6753	45.6753	45.6753	36.1683	2,995.0267	12.4210	0.0000	0.0000	65.7188	(NONE)	0.	0.	Yes
Truss Top Chord - Anchor	20.9746	20.9746	20.9746	13.4192	357.7462	10.0557	0.0000	0.0000	37.0629	(NONE)	0.	0.	No
Pylon Base	28.0000	28.0000	28.0000	117.0724	53.0000	75.6667	0.0000	0.0000	19.6569	(NONE)	0.	0.	Yes
Pylon 1	26.6980	26.6980	26.6980	107.3589	50.2875	65.8047	0.0000	0.0000	19.1361	(NONE)	0.	0.	Yes
Pylon 2	25.4480	25.4480	25.4480	98.2089	47.6833	57.1889	0.0000	0.0000	18.6361	(NONE)	0.	0.	Yes
Pylon 3	24.1980	24.1980	24.1980	89.2593	45.0791	49.3684	0.0000	0.0000	18.1361	(NONE)	0.	0.	Yes
Pylon 4	21.4900	21.4900	21.4900	70.6922	39.4374	34.9674	0.0000	0.0000	17.0528	(NONE)	0.	0.	Yes
Pylon 5	20.2400	20.2400	20.2400	62.5759	36.8332	29.4072	0.0000	0.0000	16.5528	(NONE)	0.	0.	Yes
Pylon 6	18.9900	18.9900	18.9900	54.7958	34.2291	24.4796	0.0000	0.0000	16.0528	(NONE)	0.	0.	Yes
Pylon 7	17.7400	17.7400	17.7400	47.3970	31.6249	20.1454	0.0000	0.0000	15.5528	(NONE)	0.	0.	Yes
Pylon 8	16.4900	16.4900	16.4900	40.4198	29.0207	16.3656	0.0000	0.0000	15.0528	(NONE)	0.	0.	Yes
Pylon Top	15.5000	15.5000	15.5000	35.2216	26.9583	13.7396	0.0000	0.0000	14.6569	(NONE)	0.	0.	Yes

INPUT : Section Stress Points

Name	Point 1 Y (ft)	Point 1 Z (ft)	Point 2 Y (ft)	Point 2 Z (ft)	Point 3 Y (ft)	Point 3 Z (ft)	Point 4 Y (ft)	Point 4 Z (ft)	Point 5 Y (ft)	Point 5 Z (ft)	Point 6 Y (ft)	Point 6 Z (ft)
Rigid Link	(NONE)	(NONE)	(NONE)	(NONE)	(NONE)	(NONE)	(NONE)	(NONE)	(NONE)	(NONE)	(NONE)	(NONE)
Rigid Link 2	(NONE)	(NONE)	(NONE)	(NONE)	(NONE)	(NONE)	(NONE)	(NONE)	(NONE)	(NONE)	(NONE)	(NONE)
Stay Pipe	0.6667	0.6667	0.6667	-0.6667	-0.6667	-0.6667	-0.6667	0.6667	(NONE)	(NONE)	(NONE)	(NONE)
Concrete Truss_diagonal	0.8750	1.0000	0.8750	-1.0000	-0.8750	-1.0000	-0.8750	1.0000	(NONE)	(NONE)	(NONE)	(NONE)
Concrete Truss_diagonal 2	0.8750	1.7500	0.8750	-1.7500	-0.8750	-1.7500	-0.8750	1.7500	(NONE)	(NONE)	(NONE)	(NONE)
End Diagonal	0.8750	1.5000	0.8750	-1.5000	-0.8750	-1.5000	-0.8750	1.5000	(NONE)	(NONE)	(NONE)	(NONE)
Pier 2 Base	5.0000	3.0000	5.0000	-3.0000	-5.0000	-3.0000	-5.0000	3.0000	(NONE)	(NONE)	(NONE)	(NONE)
Pier 2 Base Middle	7.0417	3.0000	7.0417	-3.0000	-7.0417	-3.0000	-7.0417	3.0000	(NONE)	(NONE)	(NONE)	(NONE)
Pier 2 Top	9.0833	3.0000	9.0833	-3.0000	-9.0833	-3.0000	-9.0833	3.0000	(NONE)	(NONE)	(NONE)	(NONE)
End Piers Cap	2.5000	2.5000	2.5000	-2.5000	-2.5000	-2.5000	-2.5000	2.5000	(NONE)	(NONE)	(NONE)	(NONE)
End Piers Colum	1.0000	2.5000	1.0000	-2.5000	-1.0000	-2.5000	-1.0000	2.5000	(NONE)	(NONE)	(NONE)	(NONE)

INPUT : Section Stress Points

Name	Point 1 Y (ft)	Point 1 Z (ft)	Point 2 Y (ft)	Point 2 Z (ft)	Point 3 Y (ft)	Point 3 Z (ft)	Point 4 Y (ft)	Point 4 Z (ft)	Point 5 Y (ft)	Point 5 Z (ft)	Point 6 Y (ft)	Point 6 Z (ft)
Truss Top Chord-16ft wide	-7.3046	1.0173	7.3046	1.0173	6.5372	-1.1169	-6.5372	-1.1169	0.0000	0.7906	0.0000	-0.2094
Truss Bottom Chord-31ft 8in_wide	-15.8333	0.9295	15.8333	0.9295	15.8333	0.1359	-15.8333	0.1359	0.0000	0.6470	-0.5000	-1.3973
Truss Top Chord - Anchor	-7.3046	0.7210	7.3046	0.7210	6.5372	-1.4132	-6.5372	-1.4132	0.0000	1.7443	0.0000	-0.5057
Pylon Base	2.5000	2.0000	-2.5000	2.0000	-2.5000	-2.0000	2.5000	-2.0000	(NONE)	(NONE)	(NONE)	(NONE)
Pylon 1	2.5000	1.8698	-2.5000	1.8698	-2.5000	-1.8698	2.5000	-1.8698	(NONE)	(NONE)	(NONE)	(NONE)
Pylon 2	2.5000	1.7448	-2.5000	1.7448	-2.5000	-1.7448	2.5000	-1.7448	(NONE)	(NONE)	(NONE)	(NONE)
Pylon 3	2.5000	1.6198	-2.5000	1.6198	-2.5000	-1.6198	2.5000	-1.6198	(NONE)	(NONE)	(NONE)	(NONE)
Pylon 4	2.5000	1.3490	-2.5000	1.3490	-2.5000	-1.3490	2.5000	-1.3490	(NONE)	(NONE)	(NONE)	(NONE)
Pylon 5	2.5000	1.2240	-2.5000	1.2240	-2.5000	-1.2240	2.5000	-1.2240	(NONE)	(NONE)	(NONE)	(NONE)
Pylon 6	2.5000	1.0990	-2.5000	1.0990	-2.5000	-1.0990	2.5000	-1.0990	(NONE)	(NONE)	(NONE)	(NONE)
Pylon 7	2.5000	0.9740	-2.5000	0.9740	-2.5000	-0.9740	2.5000	-0.9740	(NONE)	(NONE)	(NONE)	(NONE)
Pylon 8	2.5000	0.8490	-2.5000	0.8490	-2.5000	-0.8490	2.5000	-0.8490	(NONE)	(NONE)	(NONE)	(NONE)
Pylon Top	2.5000	0.7500	-2.5000	0.7500	-2.5000	-0.7500	2.5000	-0.7500	(NONE)	(NONE)	(NONE)	(NONE)

INPUT : Section Dimensions

Name	Shape	Dimension D1	Dimension D2	Dimension D3	Dimension D4	Dimension D5	Dimension D6
Rigid Link	Unspecified						
Rigid Link 2	Unspecified						
Stay Pipe	Hollow Circle	1.3333	0.1198				
Concrete Truss_diagonal	Rectangle	1.7500	2.0000				
Concrete Truss_diagonal 2	Rectangle	1.7500	3.5000				
End Diagonal	Rectangle	1.7500	3.0000				
Pier 2 Base	Rectangle	10.0000	6.0000				
Pier 2 Base Middle	Rectangle	14.0833	6.0000				
Pier 2 Top	Rectangle	18.1667	6.0000				
End Piers Cap	Rectangle	5.0000	5.0000				
End Piers Colum	Rectangle	2.0000	5.0000				
Truss Top Chord-16ft wide	Parametric						
Truss Bottom Chord-31ft 8in_wide	Parametric						
Truss Top Chord - Anchor	Parametric						
Pylon Base	Parametric						
Pylon 1	Parametric						

INPUT : Section Dimensions

Name	Shape	Dimension D1	Dimension D2	Dimension D3	Dimension D4	Dimension D5	Dimension D6
Pylon 2	Parametric						
Pylon 3	Parametric						
Pylon 4	Parametric						
Pylon 5	Parametric						
Pylon 6	Parametric						
Pylon 7	Parametric						
Pylon 8	Parametric						
Pylon Top	Parametric						

INPUT : Joints

ID	X (ft)	Y (ft)	Z (ft)	Translation DOF	Rotation DOF	Displacement UCS	Assignment
1	0.0000	0.0000	-1.7350	all free	all free	Global	Yes
2	0.2500	0.0000	-1.7325	all free	all free	Global	Yes
3	1.1250	0.0000	-1.7239	all free	all free	Global	Yes
4	6.5400	0.0000	-1.6696	all free	all free	Global	Yes
5	18.1400	0.0000	-1.5536	all free	all free	Global	Yes
6	29.7300	0.0000	-1.4377	all free	all free	Global	Yes
7	31.2800	0.0000	-1.4222	all free	all free	Global	Yes
8	31.9600	0.0000	-1.4154	all free	all free	Global	Yes
9	36.8800	0.0000	-1.3663	all free	all free	Global	Yes
10	49.2000	0.0000	-1.2430	all free	all free	Global	Yes
11	61.5300	0.0000	-1.1197	all free	all free	Global	Yes
12	63.1900	0.0000	-1.1031	all free	all free	Global	Yes
13	63.8600	0.0000	-1.0964	all free	all free	Global	Yes
14	68.1400	0.0000	-1.0536	all free	all free	Global	Yes
15	81.6300	0.0000	-0.9188	all free	all free	Global	Yes
16	95.1100	0.0000	-0.7839	all free	all free	Global	Yes
17	96.6800	0.0000	-0.7682	all free	all free	Global	Yes
18	97.3500	0.0000	-0.7615	all free	all free	Global	Yes
19	100.7800	0.0000	-0.7272	all free	all free	Global	Yes
20	115.4200	0.0000	-0.5808	all free	all free	Global	Yes
21	130.0600	0.0000	-0.4344	all free	all free	Global	Yes

INPUT : Joints

ID	X (ft)	Y (ft)	Z (ft)	Translation DOF	Rotation DOF	Displacement UCS	Assignment
22	132.6400	0.0000	-0.4086	all free	all free	Global	Yes
23	133.3100	0.0000	-0.4019	all free	all free	Global	Yes
24	135.6500	0.0000	-0.3785	all free	all free	Global	Yes
25	151.3200	0.0000	-0.2218	all free	all free	Global	Yes
26	167.0000	0.0000	-0.0650	all free	all free	Global	Yes
27	171.0200	0.0000	-0.0248	all free	all free	Global	Yes
28	173.5000	0.0000	0.0000	all free	all free	Global	Yes
29	175.9800	0.0000	0.0248	all free	all free	Global	Yes
30	180.0300	0.0000	0.0653	all free	all free	Global	Yes
31	195.7100	0.0000	0.2221	all free	all free	Global	Yes
32	211.3900	0.0000	0.3789	all free	all free	Global	Yes
33	213.6900	0.0000	0.4019	all free	all free	Global	Yes
34	213.9900	0.0000	0.4049	all free	all free	Global	Yes
35	215.6400	0.0000	0.4214	all free	all free	Global	Yes
36	220.7400	0.0000	0.4724	all free	all free	Global	Yes
37	225.8500	0.0000	0.5235	all free	all free	Global	Yes
38	228.4900	0.0000	0.5499	all free	all free	Global	Yes
39	228.7900	0.0000	0.5529	all free	all free	Global	Yes
40	230.3500	0.0000	0.5685	all free	all free	Global	Yes
41	234.9900	0.0000	0.6149	all free	all free	Global	Yes
42	239.6400	0.0000	0.6614	all free	all free	Global	Yes
43	242.5200	0.0000	0.6902	all free	all free	Global	Yes
44	242.8200	0.0000	0.6932	all free	all free	Global	Yes
45	244.3600	0.0000	0.7086	all free	all free	Global	Yes
46	248.6800	0.0000	0.7518	all free	all free	Global	Yes
47	252.9900	0.0000	0.7949	all free	all free	Global	Yes
48	256.0600	0.0000	0.8256	all free	all free	Global	Yes
49	256.3600	0.0000	0.8286	all free	all free	Global	Yes
50	257.9000	0.0000	0.8440	all free	all free	Global	Yes
51	261.9700	0.0000	0.8847	all free	all free	Global	Yes
52	266.0400	0.0000	0.9254	all free	all free	Global	Yes
53	269.2700	0.0000	0.9577	all free	all free	Global	Yes
54	271.0000	0.0000	0.9750	all free	all free	Global	Yes
55	271.5000	0.0000	0.9800	all free	all free	Global	Yes

INPUT : Joints

ID	X (ft)	Y (ft)	Z (ft)	Translation DOF	Rotation DOF	Displacement UCS	Assignment
56	272.5000	0.0000	0.9900	all free	all free	Global	Yes
57	280.0000	0.0000	1.0650	all free	all free	Global	Yes
58	287.5000	0.0000	1.1400	all free	all free	Global	Yes
60	-1.5000	0.0000	-1.7500	all free	all free	Global	Yes
101	0.0000	0.0000	14.0879	all free	all free	Global	Yes
102	2.5000	0.0000	14.1129	all free	all free	Global	Yes
103	17.4500	0.0000	14.2624	all free	all free	Global	Yes
104	32.2083	0.0000	14.4119	all free	all free	Global	Yes
105	36.2900	0.0000	14.4508	all free	all free	Global	Yes
106	36.7200	0.0000	14.4551	all free	all free	Global	Yes
107	38.6563	0.0000	14.4764	all free	all free	Global	Yes
108	49.4100	0.0000	14.5820	all free	all free	Global	Yes
109	59.8125	0.0000	14.6877	all free	all free	Global	Yes
110	63.4600	0.0000	14.7225	all free	all free	Global	Yes
111	63.9000	0.0000	14.7269	all free	all free	Global	Yes
112	65.6875	0.0000	14.7465	all free	all free	Global	Yes
113	76.7900	0.0000	14.8558	all free	all free	Global	Yes
114	87.5729	0.0000	14.9651	all free	all free	Global	Yes
115	90.6800	0.0000	14.9947	all free	all free	Global	Yes
116	91.1400	0.0000	14.9993	all free	all free	Global	Yes
117	92.7292	0.0000	15.0167	all free	all free	Global	Yes
118	104.2800	0.0000	15.1307	all free	all free	Global	Yes
119	115.5625	0.0000	15.2447	all free	all free	Global	Yes
120	117.9500	0.0000	15.2674	all free	all free	Global	Yes
121	118.4500	0.0000	15.2724	all free	all free	Global	Yes
122	120.1354	0.0000	15.2885	all free	all free	Global	Yes
123	132.0000	0.0000	15.4079	all free	all free	Global	Yes
124	143.8646	0.0000	15.5273	all free	all free	Global	Yes
125	145.3400	0.0000	15.5414	all free	all free	Global	Yes
126	145.8800	0.0000	15.5467	all free	all free	Global	Yes
127	148.6875	0.0000	15.5735	all free	all free	Global	Yes
128	159.2000	0.0000	15.6799	all free	all free	Global	Yes
129	169.8300	0.0000	15.7863	all free	all free	Global	Yes
130	170.5000	0.0000	15.7929	all free	all free	Global	Yes

INPUT : Joints

ID	X (ft)	Y (ft)	Z (ft)	Translation DOF	Rotation DOF	Displacement UCS	Assignment
131	173.5000	0.0000	15.8229	all free	all free	Global	Yes
132	176.5000	0.0000	15.8529	all free	all free	Global	Yes
133	177.1700	0.0000	15.8596	all free	all free	Global	Yes
134	187.7900	0.0000	15.9658	all free	all free	Global	Yes
135	198.2708	0.0000	16.0721	all free	all free	Global	Yes
136	201.1300	0.0000	16.0992	all free	all free	Global	Yes
137	201.6600	0.0000	16.1045	all free	all free	Global	Yes
138	203.1042	0.0000	16.1182	all free	all free	Global	Yes
139	207.4200	0.0000	16.1621	all free	all free	Global	Yes
140	212.0313	0.0000	16.2059	all free	all free	Global	Yes
141	213.2600	0.0000	16.2205	all free	all free	Global	Yes
142	213.4700	0.0000	16.2226	all free	all free	Global	Yes
143	215.5104	0.0000	16.2421	all free	all free	Global	Yes
144	219.6500	0.0000	16.2844	all free	all free	Global	Yes
145	224.1458	0.0000	16.3268	all free	all free	Global	Yes
146	225.3600	0.0000	16.3416	all free	all free	Global	Yes
147	225.5600	0.0000	16.3435	all free	all free	Global	Yes
148	227.8021	0.0000	16.3650	all free	all free	Global	Yes
149	231.8200	0.0000	16.4061	all free	all free	Global	Yes
150	236.1771	0.0000	16.4472	all free	all free	Global	Yes
151	237.4400	0.0000	16.4623	all free	all free	Global	Yes
152	237.6300	0.0000	16.4642	all free	all free	Global	Yes
153	240.0313	0.0000	16.4872	all free	all free	Global	Yes
154	243.9300	0.0000	16.5272	all free	all free	Global	Yes
155	248.1979	0.0000	16.5673	all free	all free	Global	Yes
156	249.5000	0.0000	16.5829	all free	all free	Global	Yes
157	249.6800	0.0000	16.5847	all free	all free	Global	Yes
158	252.2083	0.0000	16.6089	all free	all free	Global	Yes
159	260.2969	0.0000	16.6909	all free	all free	Global	Yes
160	268.5000	0.0000	16.7729	all free	all free	Global	Yes
161	271.0000	0.0000	16.7979	all free	all free	Global	Yes
162	272.5000	0.0000	16.8129	all free	all free	Global	Yes
163	-1.5000	0.0000	14.0729	all free	all free	Global	Yes
1001	0.2500	5.0000	-5.4654	all free	all free	Global	Yes

INPUT : Joints

ID	X (ft)	Y (ft)	Z (ft)	Translation DOF	Rotation DOF	Displacement UCS	Assignment
1002	0.2500	5.0000	-5.9654	all free	all free	Global	Yes
1003	-0.5000	5.0000	-8.4654	all free	all free	Global	Yes
1004	-0.5000	13.8333	-8.4654	all free	all free	Global	Yes
1005	-0.5000	14.8333	-8.4654	all free	all free	Global	Yes
1006	-0.5000	15.8333	-8.4654	all free	all free	Global	Yes
1007	-0.5000	14.8333	-10.9654	all free	all free	Global	Yes
1008	-0.5000	14.8333	-19.6113	all free	all free	Global	Yes
1009	-0.5000	14.8333	-28.2571	all free	all free	Global	Yes
1010	-0.5000	14.8333	-29.7571	all fixed	all fixed	Global	Yes
1011	0.2500	-5.0000	-5.4654	all free	all free	Global	Yes
1012	0.2500	-5.0000	-5.9654	all free	all free	Global	Yes
1013	-0.5000	-5.0000	-8.4654	all free	all free	Global	Yes
1014	-0.5000	-13.8333	-8.4654	all free	all free	Global	Yes
1015	-0.5000	-14.8333	-8.4654	all free	all free	Global	Yes
1016	-0.5000	-15.8333	-8.4654	all free	all free	Global	Yes
1017	-0.5000	-14.8333	-10.9654	all free	all free	Global	Yes
1018	-0.5000	-14.8333	-17.8613	all free	all free	Global	Yes
1019	-0.5000	-14.8333	-24.7571	all free	all free	Global	Yes
1020	-0.5000	-14.8333	-26.2571	all fixed	all fixed	Global	Yes
1021	-0.5000	5.0000	-5.9654	all free	all free	Global	Yes
1022	-0.5000	-5.0000	-5.9654	all free	all free	Global	Yes
2001	173.5000	0.0000	-3.5729	all free	all free	Global	Yes
2002	173.5000	0.0000	-14.4167	all free	all free	Global	Yes
2003	173.5000	0.0000	-25.2604	all free	all free	Global	Yes
2004	173.5000	0.0000	-28.0104	all free	all free	Global	Yes
3001	271.5000	5.0000	-2.7304	all free	all free	Global	Yes
3002	271.5000	5.0000	-3.2304	all free	all free	Global	Yes
3003	271.5000	5.0000	-5.7304	all free	all free	Global	Yes
3004	271.5000	13.8333	-5.7304	all free	all free	Global	Yes
3005	271.5000	14.8333	-5.7304	all free	all free	Global	Yes
3006	271.5000	15.8333	-5.7304	all free	all free	Global	Yes
3007	271.5000	14.8333	-8.2304	all free	all free	Global	Yes
3008	271.5000	14.8333	-16.5013	all free	all free	Global	Yes
3009	271.5000	14.8333	-24.7721	all free	all free	Global	Yes

INPUT : Joints

ID	X (ft)	Y (ft)	Z (ft)	Translation DOF	Rotation DOF	Displacement UCS	Assignment
3010	271.5000	14.8333	-26.2721	all fixed	all fixed	Global	Yes
3011	271.5000	-5.0000	-2.7304	all free	all free	Global	Yes
3012	271.5000	-5.0000	-3.2304	all free	all free	Global	Yes
3013	271.5000	-5.0000	-5.7304	all free	all free	Global	Yes
3014	271.5000	-13.8333	-5.7304	all free	all free	Global	Yes
3015	271.5000	-14.8333	-5.7304	all free	all free	Global	Yes
3016	271.5000	-15.8333	-5.7304	all free	all free	Global	Yes
3017	271.5000	-14.8333	-8.2304	all free	all free	Global	Yes
3018	271.5000	-14.8333	-18.2513	all free	all free	Global	Yes
3019	271.5000	-14.8333	-28.2721	all free	all free	Global	Yes
3020	271.5000	-14.8333	-29.7721	all fixed	all fixed	Global	Yes
400	173.5000	0.0000	0.6771	all free	all free	Global	Yes
401	173.5000	0.0000	6.5000	all free	all free	Global	Yes
402	173.5000	0.0000	12.6250	all free	all free	Global	Yes
403	173.5000	0.0000	16.5938	all free	all free	Global	Yes
404	173.5000	0.0000	23.7083	all free	all free	Global	Yes
405	173.5000	0.0000	30.2083	all free	all free	Global	Yes
406	173.5000	0.0000	36.7083	all free	all free	Global	Yes
407	173.5000	0.0000	50.6458	all free	all free	Global	Yes
408	173.5000	0.0000	57.1458	all free	all free	Global	Yes
409	173.5000	0.0000	63.6458	all free	all free	Global	Yes
410	173.5000	0.0000	70.1458	all free	all free	Global	Yes
411	173.5000	0.0000	76.6458	all free	all free	Global	Yes
412	173.5000	0.0000	82.4375	all free	all free	Global	Yes
701	0.0000	0.0000	-0.1517	all free	all free	Global	Yes
702	0.0000	0.0000	12.9525	all free	all free	Global	Yes
703	6.1354	0.0000	0.5463	all free	all free	Global	Yes
704	32.6250	0.0000	12.5983	all free	all free	Global	Yes
705	32.0729	0.0000	1.0567	all free	all free	Global	Yes
706	35.3646	0.0000	11.5150	all free	all free	Global	Yes
707	36.4271	0.0000	0.8379	all free	all free	Global	Yes
708	60.2708	0.0000	12.8900	all free	all free	Global	Yes
709	63.2292	0.0000	0.6782	all free	all free	Global	Yes
710	63.4167	0.0000	12.5011	all free	all free	Global	Yes

INPUT : Joints

ID	X (ft)	Y (ft)	Z (ft)	Translation DOF	Rotation DOF	Displacement UCS	Assignment
711	67.6250	0.0000	1.1192	all free	all free	Global	Yes
712	88.0833	0.0000	13.2025	all free	all free	Global	Yes
713	96.0521	0.0000	0.8796	all free	all free	Global	Yes
714	91.3021	0.0000	13.3379	all free	all free	Global	Yes
715	100.1771	0.0000	1.4108	all free	all free	Global	Yes
716	116.1667	0.0000	13.5775	all free	all free	Global	Yes
717	130.7813	0.0000	1.5567	all free	all free	Global	Yes
718	119.4063	0.0000	13.7025	all free	all free	Global	Yes
719	134.8542	0.0000	1.5463	all free	all free	Global	Yes
720	144.6563	0.0000	14.0046	all free	all free	Global	Yes
721	167.5104	0.0000	2.0879	all free	all free	Global	Yes
722	148.1771	0.0000	13.8067	all free	all free	Global	Yes
727	179.4896	0.0000	2.2292	all free	all free	Global	Yes
728	198.8125	0.0000	14.3229	all free	all free	Global	Yes
729	211.4271	0.0000	3.2292	all free	all free	Global	Yes
730	202.3333	0.0000	14.5938	all free	all free	Global	Yes
731	213.8750	0.0000	3.9063	all free	all free	Global	Yes
732	213.5938	0.0000	12.4375	all free	all free	Global	Yes
733	225.6250	0.0000	3.5000	all free	all free	Global	Yes
734	215.7813	0.0000	13.6250	all free	all free	Global	Yes
735	227.9792	0.0000	4.5313	all free	all free	Global	Yes
736	226.4479	0.0000	12.0104	all free	all free	Global	Yes
737	239.1250	0.0000	3.7813	all free	all free	Global	Yes
738	228.5417	0.0000	13.4375	all free	all free	Global	Yes
739	241.3854	0.0000	5.0417	all free	all free	Global	Yes
740	239.1875	0.0000	11.6979	all free	all free	Global	Yes
741	252.2083	0.0000	4.0521	all free	all free	Global	Yes
742	241.2083	0.0000	13.2813	all free	all free	Global	Yes
743	254.3854	0.0000	5.4688	all free	all free	Global	Yes
744	251.8333	0.0000	11.4792	all free	all free	Global	Yes
745	266.6563	0.0000	3.0208	all free	all free	Global	Yes
746	253.7917	0.0000	13.1875	all free	all free	Global	Yes
747	271.0000	0.0000	2.5792	all free	all free	Global	Yes
748	271.0000	0.0000	15.5479	all free	all free	Global	Yes

INPUT : Joints

ID	X (ft)	Y (ft)	Z (ft)	Translation DOF	Rotation DOF	Displacement UCS	Assignment
801	36.2185	0.0000	14.2233	all free	all free	Global	Yes
802	63.4479	0.0000	14.5046	all free	all free	Global	Yes
803	90.7500	0.0000	14.7650	all free	all free	Global	Yes
804	118.1458	0.0000	15.0463	all free	all free	Global	Yes
805	145.6979	0.0000	15.3171	all free	all free	Global	Yes
806	201.3021	0.0000	15.8854	all free	all free	Global	Yes
807	213.4792	0.0000	16.0000	all free	all free	Global	Yes
808	225.6042	0.0000	16.1250	all free	all free	Global	Yes
809	237.6979	0.0000	16.2396	all free	all free	Global	Yes
810	249.7708	0.0000	16.3646	all free	all free	Global	Yes
2000	173.5000	0.0000	-0.0833	all free	all free	Global	Yes
5000	0.0000	0.0000	-1.6517	all free	all free	Global	Yes
5001	0.0000	0.0000	14.0046	all free	all free	Global	Yes

INPUT : Members

ID	I-Joint	J-Joint	Span	Type	Section at Start	Section at End	Material	Prestress Force (kips)	Length (ft)	Rigid Zone from Start (x/L)	Rigid Zone from End (x/L)	Orientation Angle (deg)	Castin g (day)	Structure Group
1	1	2	-	Beam	Truss Bottom Chord-31ft 8in_wide	(same as start)	f'c_8.5ksi	0.0000	.25	0.0000	0.0000	0.0000	0	Main Span
2	2	3	-	Beam	Truss Bottom Chord-31ft 8in_wide	(same as start)	f'c_8.5ksi	0.0000	.875	0.0000	0.0000	0.0000	0	Main Span
3	3	4	-	Beam	Truss Bottom Chord-31ft 8in_wide	(same as start)	f'c_8.5ksi	0.0000	5.4153	0.0000	0.0000	0.0000	0	Main Span
4	4	5	-	Beam	Truss Bottom Chord-31ft 8in_wide	(same as start)	f'c_8.5ksi	0.0000	11.6006	0.0000	0.0000	0.0000	0	Main Span
5	5	6	-	Beam	Truss Bottom Chord-31ft 8in_wide	(same as start)	f'c_8.5ksi	0.0000	11.5906	0.0000	0.0000	0.0000	0	Main Span
6	6	7	-	Beam	Truss Bottom Chord-31ft 8in_wide	(same as start)	f'c_8.5ksi	0.0000	1.5501	0.0000	0.0000	0.0000	0	Main Span
7	7	8	-	Beam	Truss Bottom Chord-31ft 8in_wide	(same as start)	f'c_8.5ksi	0.0000	.68	0.0000	0.0000	0.0000	0	Main Span
8	8	9	-	Beam	Truss Bottom Chord-31ft 8in_wide	(same as start)	f'c_8.5ksi	0.0000	4.9202	0.0000	0.0000	0.0000	0	Main Span
9	9	10	-	Beam	Truss Bottom Chord-31ft 8in_wide	(same as start)	f'c_8.5ksi	0.0000	12.3206	0.0000	0.0000	0.0000	0	Main Span
10	10	11	-	Beam	Truss Bottom Chord-31ft 8in_wide	(same as start)	f'c_8.5ksi	0.0000	12.3306	0.0000	0.0000	0.0000	0	Main Span
11	11	12	-	Beam	Truss Bottom Chord-31ft 8in_wide	(same as start)	f'c_8.5ksi	0.0000	1.6601	0.0000	0.0000	0.0000	0	Main Span
12	12	13	-	Beam	Truss Bottom Chord-31ft 8in_wide	(same as start)	f'c_8.5ksi	0.0000	.67	0.0000	0.0000	0.0000	0	Main Span
13	13	14	-	Beam	Truss Bottom Chord-31ft 8in_wide	(same as start)	f'c_8.5ksi	0.0000	4.2802	0.0000	0.0000	0.0000	0	Main Span
14	14	15	-	Beam	Truss Bottom Chord-31ft 8in_wide	(same as start)	f'c_8.5ksi	0.0000	13.4907	0.0000	0.0000	0.0000	0	Main Span
15	15	16	-	Beam	Truss Bottom Chord-31ft 8in_wide	(same as start)	f'c_8.5ksi	0.0000	13.4807	0.0000	0.0000	0.0000	0	Main Span
16	16	17	-	Beam	Truss Bottom Chord-31ft 8in_wide	(same as start)	f'c_8.5ksi	0.0000	1.5701	0.0000	0.0000	0.0000	0	Main Span

INPUT : Members

ID	I-Joint	J-Joint	Span	Type	Section at Start	Section at End	Material	Prestress Force (kips)	Length (ft)	Rigid Zone from Start (x/L)	Rigid Zone from End (x/L)	Orientation Angle (deg)	Castin g (day)	Structure Group
17	17	18	-	Beam	Truss Bottom Chord-31ft 8in_wide	(same as start)	f'c_8.5ksi	0.0000	.67	0.0000	0.0000	0.0000	0	Main Span
18	18	19	-	Beam	Truss Bottom Chord-31ft 8in_wide	(same as start)	f'c_8.5ksi	0.0000	3.4302	0.0000	0.0000	0.0000	0	Main Span
19	19	20	-	Beam	Truss Bottom Chord-31ft 8in_wide	(same as start)	f'c_8.5ksi	0.0000	14.6407	0.0000	0.0000	0.0000	0	Main Span
20	20	21	-	Beam	Truss Bottom Chord-31ft 8in_wide	(same as start)	f'c_8.5ksi	0.0000	14.6407	0.0000	0.0000	0.0000	0	Main Span
21	21	22	-	Beam	Truss Bottom Chord-31ft 8in_wide	(same as start)	f'c_8.5ksi	0.0000	2.5801	0.0000	0.0000	0.0000	0	Main Span
22	22	23	-	Beam	Truss Bottom Chord-31ft 8in_wide	(same as start)	f'c_8.5ksi	0.0000	.67	0.0000	0.0000	0.0000	0	Main Span
23	23	24	-	Beam	Truss Bottom Chord-31ft 8in_wide	(same as start)	f'c_8.5ksi	0.0000	2.3401	0.0000	0.0000	0.0000	0	Main Span
24	24	25	-	Beam	Truss Bottom Chord-31ft 8in_wide	(same as start)	f'c_8.5ksi	0.0000	15.6708	0.0000	0.0000	0.0000	0	Main Span
25	25	26	-	Beam	Truss Bottom Chord-31ft 8in_wide	(same as start)	f'c_8.5ksi	0.0000	15.6808	0.0000	0.0000	0.0000	0	Main Span
26	26	27	-	Beam	Truss Bottom Chord-31ft 8in_wide	(same as start)	f'c_8.5ksi	0.0000	4.0202	0.0000	0.0000	0.0000	0	Main Span
27	27	28	-	Beam	Truss Bottom Chord-31ft 8in_wide	(same as start)	f'c_8.5ksi	0.0000	2.4801	0.0000	0.0000	0.0000	0	Main Span
28	28	29	-	Beam	Truss Bottom Chord-31ft 8in_wide	(same as start)	f'c_8.5ksi	0.0000	2.4801	0.0000	0.0000	0.0000	90	Back Span
29	29	30	-	Beam	Truss Bottom Chord-31ft 8in_wide	(same as start)	f'c_8.5ksi	0.0000	4.0502	0.0000	0.0000	0.0000	90	Back Span
30	30	31	-	Beam	Truss Bottom Chord-31ft 8in_wide	(same as start)	f'c_8.5ksi	0.0000	15.6808	0.0000	0.0000	0.0000	90	Back Span
31	31	32	-	Beam	Truss Bottom Chord-31ft 8in_wide	(same as start)	f'c_8.5ksi	0.0000	15.6808	0.0000	0.0000	0.0000	90	Back Span
32	32	33	-	Beam	Truss Bottom Chord-31ft 8in_wide	(same as start)	f'c_8.5ksi	0.0000	2.3001	0.0000	0.0000	0.0000	90	Back Span
33	33	34	-	Beam	Truss Bottom Chord-31ft 8in_wide	(same as start)	f'c_8.5ksi	0.0000	.3	0.0000	0.0000	0.0000	90	Back Span
34	34	35	-	Beam	Truss Bottom Chord-31ft 8in_wide	(same as start)	f'c_8.5ksi	0.0000	1.6501	0.0000	0.0000	0.0000	90	Back Span
35	35	36	-	Beam	Truss Bottom Chord-31ft 8in_wide	(same as start)	f'c_8.5ksi	0.0000	5.1003	0.0000	0.0000	0.0000	90	Back Span
36	36	37	-	Beam	Truss Bottom Chord-31ft 8in_wide	(same as start)	f'c_8.5ksi	0.0000	5.1103	0.0000	0.0000	0.0000	90	Back Span
37	37	38	-	Beam	Truss Bottom Chord-31ft 8in_wide	(same as start)	f'c_8.5ksi	0.0000	2.6401	0.0000	0.0000	0.0000	90	Back Span
38	38	39	-	Beam	Truss Bottom Chord-31ft 8in_wide	(same as start)	f'c_8.5ksi	0.0000	.3	0.0000	0.0000	0.0000	90	Back Span
39	39	40	-	Beam	Truss Bottom Chord-31ft 8in_wide	(same as start)	f'c_8.5ksi	0.0000	1.5601	0.0000	0.0000	0.0000	90	Back Span
40	40	41	-	Beam	Truss Bottom Chord-31ft 8in_wide	(same as start)	f'c_8.5ksi	0.0000	4.6402	0.0000	0.0000	0.0000	90	Back Span
41	41	42	-	Beam	Truss Bottom Chord-31ft 8in_wide	(same as start)	f'c_8.5ksi	0.0000	4.6502	0.0000	0.0000	0.0000	90	Back Span
42	42	43	-	Beam	Truss Bottom Chord-31ft 8in_wide	(same as start)	f'c_8.5ksi	0.0000	2.8801	0.0000	0.0000	0.0000	90	Back Span
43	43	44	-	Beam	Truss Bottom Chord-31ft 8in_wide	(same as start)	f'c_8.5ksi	0.0000	.3	0.0000	0.0000	0.0000	90	Back Span
44	44	45	-	Beam	Truss Bottom Chord-31ft 8in_wide	(same as start)	f'c_8.5ksi	0.0000	1.5401	0.0000	0.0000	0.0000	90	Back Span
45	45	46	-	Beam	Truss Bottom Chord-31ft 8in_wide	(same as start)	f'c_8.5ksi	0.0000	4.3202	0.0000	0.0000	0.0000	90	Back Span
46	46	47	-	Beam	Truss Bottom Chord-31ft 8in_wide	(same as start)	f'c_8.5ksi	0.0000	4.3102	0.0000	0.0000	0.0000	90	Back Span
47	47	48	-	Beam	Truss Bottom Chord-31ft 8in_wide	(same as start)	f'c_8.5ksi	0.0000	3.0702	0.0000	0.0000	0.0000	90	Back Span
48	48	49	-	Beam	Truss Bottom Chord-31ft 8in_wide	(same as start)	f'c_8.5ksi	0.0000	.3	0.0000	0.0000	0.0000	90	Back Span
49	49	50	-	Beam	Truss Bottom Chord-31ft 8in_wide	(same as start)	f'c_8.5ksi	0.0000	1.5401	0.0000	0.0000	0.0000	90	Back Span
50	50	51	-	Beam	Truss Bottom Chord-31ft 8in_wide	(same as start)	f'c_8.5ksi	0.0000	4.0702	0.0000	0.0000	0.0000	90	Back Span

INPUT : Members

ID	I-Joint	J-Joint	Span	Type	Section at Start	Section at End	Material	Prestress Force (kips)	Length (ft)	Rigid Zone from Start (x/L)	Rigid Zone from End (x/L)	Orientation Angle (deg)	Castin g (day)	Structure Group
51	51	52	-	Beam	Truss Bottom Chord-31ft 8in_wide	(same as start)	f'c_8.5ksi	0.0000	4.0702	0.0000	0.0000	0.0000	90	Back Span
52	52	53	-	Beam	Truss Bottom Chord-31ft 8in_wide	(same as start)	f'c_8.5ksi	0.0000	3.2302	0.0000	0.0000	0.0000	90	Back Span
53	53	54	-	Beam	Truss Bottom Chord-31ft 8in_wide	(same as start)	f'c_8.5ksi	0.0000	1.7301	0.0000	0.0000	0.0000	90	Back Span
54	54	55	-	Beam	Truss Bottom Chord-31ft 8in_wide	(same as start)	f'c_8.5ksi	0.0000	.5	0.0000	0.0000	0.0000	90	Back Span
55	55	56	-	Beam	Truss Bottom Chord-31ft 8in_wide	(same as start)	f'c_8.5ksi	0.0000	1.	0.0000	0.0000	0.0000	90	Back Span
56	56	57	-	Beam	Truss Bottom Chord-31ft 8in_wide	(same as start)	f'c_8.5ksi	0.0000	7.5004	0.0000	0.0000	0.0000	90	Back Span
57	57	58	-	Beam	Truss Bottom Chord-31ft 8in_wide	(same as start)	f'c_8.5ksi	0.0000	7.5004	0.0000	0.0000	0.0000	90	Back Span
60	60	1	-	Beam	Truss Bottom Chord-31ft 8in_wide	(same as start)	f'c_8.5ksi	0.0000	1.5001	0.0000	0.0000	0.0000	0	Main Span
101	101	102	-	Beam	Truss Top Chord-16ft wide	(same as start)	f'c_8.5ksi	0.0000	2.5001	0.0000	0.0000	0.0000	0	Main Span
102	102	103	-	Beam	Truss Top Chord-16ft wide	(same as start)	f'c_8.5ksi	0.0000	14.9507	0.0000	0.0000	0.0000	0	Main Span
103	103	104	-	Beam	Truss Top Chord-16ft wide	(same as start)	f'c_8.5ksi	0.0000	14.7591	0.0000	0.0000	0.0000	0	Main Span
104	104	105	-	Beam	Truss Top Chord-16ft wide	(same as start)	f'c_8.5ksi	0.0000	4.0819	0.0000	0.0000	0.0000	0	Main Span
105	105	106	-	Beam	Truss Top Chord-16ft wide	(same as start)	f'c_8.5ksi	0.0000	.43	0.0000	0.0000	0.0000	0	Main Span
106	106	107	-	Beam	Truss Top Chord-16ft wide	(same as start)	f'c_8.5ksi	0.0000	1.9364	0.0000	0.0000	0.0000	0	Main Span
107	107	108	-	Beam	Truss Top Chord-16ft wide	(same as start)	f'c_8.5ksi	0.0000	10.7543	0.0000	0.0000	0.0000	0	Main Span
108	108	109	-	Beam	Truss Top Chord-16ft wide	(same as start)	f'c_8.5ksi	0.0000	10.403	0.0000	0.0000	0.0000	0	Main Span
109	109	110	-	Beam	Truss Top Chord-16ft wide	(same as start)	f'c_8.5ksi	0.0000	3.6477	0.0000	0.0000	0.0000	0	Main Span
110	110	111	-	Beam	Truss Top Chord-16ft wide	(same as start)	f'c_8.5ksi	0.0000	.44	0.0000	0.0000	0.0000	0	Main Span
111	111	112	-	Beam	Truss Top Chord-16ft wide	(same as start)	f'c_8.5ksi	0.0000	1.7876	0.0000	0.0000	0.0000	0	Main Span
112	112	113	-	Beam	Truss Top Chord-16ft wide	(same as start)	f'c_8.5ksi	0.0000	11.103	0.0000	0.0000	0.0000	0	Main Span
113	113	114	-	Beam	Truss Top Chord-16ft wide	(same as start)	f'c_8.5ksi	0.0000	10.7835	0.0000	0.0000	0.0000	0	Main Span
114	114	115	-	Beam	Truss Top Chord-16ft wide	(same as start)	f'c_8.5ksi	0.0000	3.1072	0.0000	0.0000	0.0000	0	Main Span
115	115	116	-	Beam	Truss Top Chord-16ft wide	(same as start)	f'c_8.5ksi	0.0000	.46	0.0000	0.0000	0.0000	0	Main Span
116	116	117	-	Beam	Truss Top Chord-16ft wide	(same as start)	f'c_8.5ksi	0.0000	1.5893	0.0000	0.0000	0.0000	0	Main Span
117	117	118	-	Beam	Truss Top Chord-16ft wide	(same as start)	f'c_8.5ksi	0.0000	11.5514	0.0000	0.0000	0.0000	0	Main Span
118	118	119	-	Beam	Truss Top Chord-16ft wide	(same as start)	f'c_8.5ksi	0.0000	11.2831	0.0000	0.0000	0.0000	0	Main Span
119	119	120	-	Beam	Truss Top Chord-16ft wide	(same as start)	f'c_8.5ksi	0.0000	2.3876	0.0000	0.0000	0.0000	0	Main Span
120	120	121	-	Beam	Truss Top Chord-16ft wide	(same as start)	f'c_8.5ksi	0.0000	.5	0.0000	0.0000	0.0000	0	Main Span
121	121	122	-	Beam	Truss Top Chord-16ft wide	(same as start)	f'c_8.5ksi	0.0000	1.6855	0.0000	0.0000	0.0000	0	Main Span
122	122	123	-	Beam	Truss Top Chord-16ft wide	(same as start)	f'c_8.5ksi	0.0000	11.8652	0.0000	0.0000	0.0000	0	Main Span
123	123	124	-	Beam	Truss Top Chord-16ft wide	(same as start)	f'c_8.5ksi	0.0000	11.8652	0.0000	0.0000	0.0000	0	Main Span
124	124	125	-	Beam	Truss Top Chord-16ft wide	(same as start)	f'c_8.5ksi	0.0000	1.4755	0.0000	0.0000	0.0000	0	Main Span
125	125	126	-	Beam	Truss Top Chord-16ft wide	(same as start)	f'c_8.5ksi	0.0000	.54	0.0000	0.0000	0.0000	0	Main Span
126	126	127	-	Beam	Truss Top Chord-16ft wide	(same as start)	f'c_8.5ksi	0.0000	2.8076	0.0000	0.0000	0.0000	0	Main Span

INPUT : Members

ID	I-Joint	J-Joint	Span	Type	Section at Start	Section at End	Material	Prestress Force (kips)	Length (ft)	Rigid Zone from Start (x/L)	Rigid Zone from End (x/L)	Orientation Angle (deg)	Castin g (day)	Structure Group
127	127	128	-	Beam	Truss Top Chord-16ft wide	(same as start)	f'c_8.5ksi	0.0000	10.513	0.0000	0.0000	0.0000	0	Main Span
128	128	129	-	Beam	Truss Top Chord-16ft wide	(same as start)	f'c_8.5ksi	0.0000	10.6305	0.0000	0.0000	0.0000	0	Main Span
129	129	130	-	Beam	Truss Top Chord-16ft wide	(same as start)	f'c_8.5ksi	0.0000	.67	0.0000	0.0000	0.0000	0	Main Span
130	130	131	-	Beam	Truss Top Chord-16ft wide	(same as start)	f'c_8.5ksi	0.0000	3.0001	0.0000	0.0000	0.0000	0	Main Span
131	131	132	-	Beam	Truss Top Chord-16ft wide	(same as start)	f'c_8.5ksi	0.0000	3.0001	0.0000	0.0000	0.0000	90	Back Span
132	132	133	-	Beam	Truss Top Chord-16ft wide	(same as start)	f'c_8.5ksi	0.0000	.67	0.0000	0.0000	0.0000	90	Back Span
133	133	134	-	Beam	Truss Top Chord-16ft wide	(same as start)	f'c_8.5ksi	0.0000	10.6205	0.0000	0.0000	0.0000	90	Back Span
134	134	135	-	Beam	Truss Top Chord-16ft wide	(same as start)	f'c_8.5ksi	0.0000	10.4814	0.0000	0.0000	0.0000	90	Back Span
135	135	136	-	Beam	Truss Top Chord-16ft wide	(same as start)	f'c_8.5ksi	0.0000	2.8593	0.0000	0.0000	0.0000	90	Back Span
136	136	137	-	Beam	Truss Top Chord-16ft wide	(same as start)	f'c_8.5ksi	0.0000	.53	0.0000	0.0000	0.0000	90	Back Span
137	137	138	-	Beam	Truss Top Chord-16ft wide	(same as start)	f'c_8.5ksi	0.0000	1.4442	0.0000	0.0000	0.0000	90	Back Span
138	138	139	-	Beam	Truss Top Chord-16ft wide	(same as start)	f'c_8.5ksi	0.0000	4.3161	0.0000	0.0000	0.0000	90	Back Span
139	139	140	-	Beam	Truss Top Chord-16ft wide	(same as start)	f'c_8.5ksi	0.0000	4.6115	0.0000	0.0000	0.0000	90	Back Span
140	140	141	-	Beam	Truss Top Chord-16ft wide	(same as start)	f'c_8.5ksi	0.0000	1.2288	0.0000	0.0000	0.0000	90	Back Span
141	141	142	-	Beam	Truss Top Chord-16ft wide	(same as start)	f'c_8.5ksi	0.0000	.21	0.0000	0.0000	0.0000	90	Back Span
142	142	143	-	Beam	Truss Top Chord-16ft wide	(same as start)	f'c_8.5ksi	0.0000	2.0405	0.0000	0.0000	0.0000	90	Back Span
143	143	144	-	Beam	Truss Top Chord-16ft wide	(same as start)	f'c_8.5ksi	0.0000	4.1398	0.0000	0.0000	0.0000	90	Back Span
144	144	145	-	Beam	Truss Top Chord-16ft wide	(same as start)	f'c_8.5ksi	0.0000	4.496	0.0000	0.0000	0.0000	90	Back Span
145	145	146	-	Beam	Truss Top Chord-16ft wide	(same as start)	f'c_8.5ksi	0.0000	1.2143	0.0000	0.0000	0.0000	90	Back Span
146	146	147	-	Beam	Truss Top Chord-16ft wide	(same as start)	f'c_8.5ksi	0.0000	.2	0.0000	0.0000	0.0000	90	Back Span
147	147	148	-	Beam	Truss Top Chord-16ft wide	(same as start)	f'c_8.5ksi	0.0000	2.2422	0.0000	0.0000	0.0000	90	Back Span
148	148	149	-	Beam	Truss Top Chord-16ft wide	(same as start)	f'c_8.5ksi	0.0000	4.0181	0.0000	0.0000	0.0000	90	Back Span
149	149	150	-	Beam	Truss Top Chord-16ft wide	(same as start)	f'c_8.5ksi	0.0000	4.3573	0.0000	0.0000	0.0000	90	Back Span
150	150	151	-	Beam	Truss Top Chord-16ft wide	(same as start)	f'c_8.5ksi	0.0000	1.263	0.0000	0.0000	0.0000	90	Back Span
151	151	152	-	Beam	Truss Top Chord-16ft wide	(same as start)	f'c_8.5ksi	0.0000	.19	0.0000	0.0000	0.0000	90	Back Span
152	152	153	-	Beam	Truss Top Chord-16ft wide	(same as start)	f'c_8.5ksi	0.0000	2.4014	0.0000	0.0000	0.0000	90	Back Span
153	153	154	-	Beam	Truss Top Chord-16ft wide	(same as start)	f'c_8.5ksi	0.0000	3.899	0.0000	0.0000	0.0000	90	Back Span
154	154	155	-	Beam	Truss Top Chord-16ft wide	(same as start)	f'c_8.5ksi	0.0000	4.2681	0.0000	0.0000	0.0000	90	Back Span
155	155	156	-	Beam	Truss Top Chord-16ft wide	(same as start)	f'c_8.5ksi	0.0000	1.3022	0.0000	0.0000	0.0000	90	Back Span
156	156	157	-	Beam	Truss Top Chord-16ft wide	(same as start)	f'c_8.5ksi	0.0000	.18	0.0000	0.0000	0.0000	90	Back Span
157	157	158	-	Beam	Truss Top Chord-16ft wide	(same as start)	f'c_8.5ksi	0.0000	2.5284	0.0000	0.0000	0.0000	90	Back Span
158	158	159	-	Beam	Truss Top Chord-16ft wide	(same as start)	f'c_8.5ksi	0.0000	8.089	0.0000	0.0000	0.0000	90	Back Span
159	159	160	-	Beam	Truss Top Chord-16ft wide	(same as start)	f'c_8.5ksi	0.0000	8.2035	0.0000	0.0000	0.0000	90	Back Span
160	160	161	-	Beam	Truss Top Chord-16ft wide	(same as start)	f'c_8.5ksi	0.0000	2.5001	0.0000	0.0000	0.0000	90	Back Span

INPUT : Members

ID	I-Joint	J-Joint	Span	Type	Section at Start	Section at End	Material	Prestress Force (kips)	Length (ft)	Rigid Zone from Start (x/L)	Rigid Zone from End (x/L)	Orientation Angle (deg)	Castin g (day)	Structure Group
161	161	162	-	Beam	Truss Top Chord-16ft wide	(same as start)	f'c_8.5ksi	0.0000	1.5001	0.0000	0.0000	0.0000	90	Back Span
162	163	101	-	Beam	Truss Top Chord-16ft wide	(same as start)	f'c_8.5ksi	0.0000	1.5001	0.0000	0.0000	0.0000	0	Main Span
1001	2	1001	-	Beam	Rigid Link	(same as start)	Rigid	0.0000	6.2398	0.0000	0.0000	0.0000	0	Piers
1002	2	1011	-	Beam	Rigid Link	(same as start)	Rigid	0.0000	6.2398	0.0000	0.0000	0.0000	0	Piers
1003	1001	1011	-	Beam	Rigid Link	(same as start)	Rigid	0.0000	10	0.0000	0.0000	0.0000	0	Piers
1004	1021	1003	-	Beam	Rigid Link	(same as start)	Rigid	0.0000	2.5	0.0000	0.0000	0.0000	0	Piers
1005	1022	1013	-	Beam	Rigid Link	(same as start)	Rigid	0.0000	2.5	0.0000	0.0000	0.0000	0	Piers
1006	1006	1005	-	Beam	End Piers Cap	(same as start)	f'c_5.5	0.0000	1	0.0000	0.0000	0.0000	0	Piers
1007	1005	1004	-	Beam	End Piers Cap	(same as start)	f'c_5.5	0.0000	1	0.0000	0.0000	0.0000	0	Piers
1008	1004	1003	-	Beam	End Piers Cap	(same as start)	f'c_5.5	0.0000	8.8333	0.0000	0.0000	0.0000	0	Piers
1009	1003	1013	-	Beam	End Piers Cap	(same as start)	f'c_5.5	0.0000	10	0.0000	0.0000	0.0000	0	Piers
1010	1013	1014	-	Beam	End Piers Cap	(same as start)	f'c_5.5	0.0000	8.8333	0.0000	0.0000	0.0000	0	Piers
1011	1014	1015	-	Beam	End Piers Cap	(same as start)	f'c_5.5	0.0000	1	0.0000	0.0000	0.0000	0	Piers
1012	1015	1016	-	Beam	End Piers Cap	(same as start)	f'c_5.5	0.0000	1	0.0000	0.0000	0.0000	0	Piers
1013	1005	1007	-	Beam	Rigid Link	(same as start)	Rigid	0.0000	2.5	0.0000	0.0000	0.0000	0	Piers
1014	1007	1008	-	Beam	End Piers Colum	(same as start)	f'c_5.5	0.0000	8.6458	0.0000	0.0000	0.0000	0	Piers
1015	1008	1009	-	Beam	End Piers Colum	(same as start)	f'c_5.5	0.0000	8.6458	0.0000	0.0000	0.0000	0	Piers
1016	1009	1010	-	Beam	Rigid Link	(same as start)	Rigid	0.0000	1.5	0.0000	0.0000	0.0000	0	Piers
1017	1015	1017	-	Beam	Rigid Link	(same as start)	Rigid	0.0000	2.5	0.0000	0.0000	0.0000	0	Piers
1018	1017	1018	-	Beam	End Piers Colum	(same as start)	f'c_5.5	0.0000	6.8958	0.0000	0.0000	0.0000	0	Piers
1019	1018	1019	-	Beam	End Piers Colum	(same as start)	f'c_5.5	0.0000	6.8958	0.0000	0.0000	0.0000	0	Piers
1020	1019	1020	-	Beam	Rigid Link	(same as start)	Rigid	0.0000	1.5	0.0000	0.0000	0.0000	0	Piers
1021	1002	1021	-	Beam	Rigid Link	(same as start)	Rigid	0.0000	.75	0.0000	0.0000	0.0000	0	Piers
1022	1012	1022	-	Beam	Rigid Link	(same as start)	Rigid	0.0000	.75	0.0000	0.0000	0.0000	0	Piers
2001	2000	2001	-	Beam	Rigid Link	(same as start)	Rigid	0.0000	3.4896	0.0000	0.0000	0.0000	0	Piers
2002	2001	2002	-	Beam	Pier 2 Top	Pier 2 Base	f'c_5.5	0.0000	10.8438	0.0000	0.0000	0.0000	0	Piers
2003	2002	2003	-	Beam	Pier 2 Base Middle	Pier 2 Base	f'c_5.5	0.0000	10.8438	0.0000	0.0000	0.0000	0	Piers
2004	2003	2004	-	Beam	Rigid Link	(same as start)	Rigid	0.0000	2.75	0.0000	0.0000	0.0000	0	Piers
3001	55	3001	-	Beam	Rigid Link	(same as start)	Rigid	0.0000	6.2263	0.0000	0.0000	0.0000	0	Piers
3002	55	3011	-	Beam	Rigid Link	(same as start)	Rigid	0.0000	6.2263	0.0000	0.0000	0.0000	0	Piers
3003	3001	3011	-	Beam	Rigid Link	(same as start)	Rigid	0.0000	10	0.0000	0.0000	0.0000	0	Piers
3004	3002	3003	-	Beam	Rigid Link	(same as start)	Rigid	0.0000	2.5	0.0000	0.0000	0.0000	0	Piers
3005	3012	3013	-	Beam	Rigid Link	(same as start)	Rigid	0.0000	2.5	0.0000	0.0000	0.0000	0	Piers
3006	3006	3005	-	Beam	End Piers Cap	(same as start)	f'c_5.5	0.0000	1	0.0000	0.0000	0.0000	0	Piers

INPUT : Members

ID	I-Joint	J-Joint	Span	Type	Section at Start	Section at End	Material	Prestress Force (kips)	Length (ft)	Rigid Zone from Start (x/L)	Rigid Zone from End (x/L)	Orientation Angle (deg)	Castin g (day)	Structure Group
3007	3005	3004	-	Beam	End Piers Cap	(same as start)	f'c_5.5	0.0000	1	0.0000	0.0000	0.0000	0	Piers
3008	3004	3003	-	Beam	End Piers Cap	(same as start)	f'c_5.5	0.0000	8.8333	0.0000	0.0000	0.0000	0	Piers
3009	3003	3013	-	Beam	End Piers Cap	(same as start)	f'c_5.5	0.0000	10	0.0000	0.0000	0.0000	0	Piers
3010	3013	3014	-	Beam	End Piers Cap	(same as start)	f'c_5.5	0.0000	8.8333	0.0000	0.0000	0.0000	0	Piers
3011	3014	3015	-	Beam	End Piers Cap	(same as start)	f'c_5.5	0.0000	1.	0.0000	0.0000	0.0000	0	Piers
3012	3015	3016	-	Beam	End Piers Cap	(same as start)	f'c_5.5	0.0000	1	0.0000	0.0000	0.0000	0	Piers
3013	3005	3007	-	Beam	Rigid Link	(same as start)	Rigid	0.0000	2.5	0.0000	0.0000	0.0000	0	Piers
3014	3007	3008	-	Beam	End Piers Colum	(same as start)	f'c_5.5	0.0000	8.2708	0.0000	0.0000	0.0000	0	Piers
3015	3008	3009	-	Beam	End Piers Colum	(same as start)	f'c_5.5	0.0000	8.2708	0.0000	0.0000	0.0000	0	Piers
3016	3009	3010	-	Beam	Rigid Link	(same as start)	Rigid	0.0000	1.5	0.0000	0.0000	0.0000	0	Piers
3017	3015	3017	-	Beam	Rigid Link	(same as start)	Rigid	0.0000	2.5	0.0000	0.0000	0.0000	0	Piers
3018	3017	3018	-	Beam	End Piers Colum	(same as start)	f'c_5.5	0.0000	10.0208	0.0000	0.0000	0.0000	0	Piers
3019	3018	3019	-	Beam	End Piers Colum	(same as start)	f'c_5.5	0.0000	10.0208	0.0000	0.0000	0.0000	0	Piers
3020	3019	3020	-	Beam	Rigid Link	(same as start)	Rigid	0.0000	1.5	0.0000	0.0000	0.0000	0	Piers
400	28	400	-	Beam	Rigid Link	(same as start)	Rigid	0.0000	.6771	0.0000	0.0000	0.0000	0	Main Span
401	400	401	-	Beam	Pylon Base	(same as start)	f'c_8.5ksi	0.0000	5.8229	0.0000	0.0000	0.0000	0	Main Span
402	401	402	-	Beam	Pylon Base	(same as start)	f'c_8.5ksi	0.0000	6.125	0.0000	0.0000	0.0000	0	Main Span
403	402	131	-	Beam	Pylon Base	(same as start)	f'c_8.5ksi	0.0000	3.1979	0.0000	0.0000	0.0000	0	Main Span
404	131	403	-	Beam	Rigid Link	Rigid Link	Rigid	0.0000	.7708	0.0000	0.0000	0.0000	97	Pylon
405	403	404	-	Beam	Pylon Base	Pylon 1	f'c_8.5ksi	0.0000	7.1146	0.0000	0.0000	0.0000	97	Pylon
406	404	405	-	Beam	Pylon 1	Pylon 2	f'c_8.5ksi	0.0000	6.5	0.0000	0.0000	0.0000	97	Pylon
407	405	406	-	Beam	Pylon 2	Pylon 3	f'c_8.5ksi	0.0000	6.5	0.0000	0.0000	0.0000	97	Pylon
408	406	407	-	Beam	Pylon 3	Pylon 4	f'c_8.5ksi	0.0000	13.9375	0.0000	0.0000	0.0000	97	Pylon
409	407	408	-	Beam	Pylon 4	Pylon 5	f'c_8.5ksi	0.0000	6.5	0.0000	0.0000	0.0000	97	Pylon
410	408	409	-	Beam	Pylon 5	Pylon 6	f'c_8.5ksi	0.0000	6.5	0.0000	0.0000	0.0000	97	Pylon
411	409	410	-	Beam	Pylon 6	Pylon 7	f'c_8.5ksi	0.0000	6.5	0.0000	0.0000	0.0000	97	Pylon
412	410	411	-	Beam	Pylon 7	Pylon 8	f'c_8.5ksi	0.0000	6.5	0.0000	0.0000	0.0000	97	Pylon
413	411	412	-	Beam	Pylon 8	Pylon Top	f'c_8.5ksi	0.0000	5.7917	0.0000	0.0000	0.0000	97	Pylon
501	106	411	-	Beam	Stay Pipe	(same as start)	Steel Pipe	0.0000	150.2546	0.0000	0.0000	0.0000	0	Stay 5
502	111	410	-	Beam	Stay Pipe	(same as start)	Steel Pipe	0.0000	122.8146	0.0000	0.0000	0.0000	0	Stay 4
503	116	409	-	Beam	Stay Pipe	(same as start)	Steel Pipe	0.0000	95.6538	0.0000	0.0000	0.0000	0	Stay 3
504	121	408	-	Beam	Stay Pipe	(same as start)	Steel Pipe	0.0000	69.1656	0.0000	0.0000	0.0000	0	Stay 2
505	126	407	-	Beam	Stay Pipe	(same as start)	Steel Pipe	0.0000	44.6633	0.0000	0.0000	0.0000	0	Stay 1
601	156	411	-	Beam	Stay Pipe	(same as start)	Steel Pipe	0.0000	96.8688	0.0000	0.0000	0.0000	0	Stay 5

INPUT : Members

ID	I-Joint	J-Joint	Span	Type	Section at Start	Section at End	Material	Prestress Force (kips)	Length (ft)	Rigid Zone from Start (x/L)	Rigid Zone from End (x/L)	Orientation Angle (deg)	Castin g (day)	Structure Group
602	151	410	-	Beam	Stay Pipe	(same as start)	Steel Pipe	0.0000	83.488	0.0000	0.0000	0.0000	0	Stay 4
603	146	409	-	Beam	Stay Pipe	(same as start)	Steel Pipe	0.0000	70.1937	0.0000	0.0000	0.0000	0	Stay 3
604	141	408	-	Beam	Stay Pipe	(same as start)	Steel Pipe	0.0000	57.0591	0.0000	0.0000	0.0000	0	Stay 2
605	136	407	-	Beam	Stay Pipe	(same as start)	Steel Pipe	0.0000	44.2367	0.0000	0.0000	0.0000	0	Stay 1
701	5000	701	-	Beam	End Diagonal	(same as start)	f'c_8.5ksi	0.0000	1.5	0.0000	0.0000	0.0000	0	Main Span
702	701	702	-	Beam	End Diagonal	(same as start)	f'c_8.5ksi	0.0000	13.1042	0.0000	0.0000	0.0000	0	Main Span
703	702	5001	-	Beam	End Diagonal	(same as start)	f'c_8.5ksi	0.0000	1.0521	0.0000	0.0000	0.0000	0	Main Span
704	3	703	-	Beam	End Diagonal	(same as start)	f'c_8.5ksi	0.0000	5.5007	0.0000	0.0000	0.0000	0	Main Span
705	703	704	-	Beam	End Diagonal	(same as start)	f'c_8.5ksi	0.0000	29.1024	0.0000	0.0000	0.0000	0	Main Span
706	704	801	-	Beam	End Diagonal	(same as start)	f'c_8.5ksi	0.0000	3.9439	0.0000	0.0000	0.0000	0	Main Span
707	7	705	-	Beam	Concrete Truss_diagonal	(same as start)	f'c_8.5ksi	0.0000	2.6026	0.0000	0.0000	0.0000	0	Main Span
708	705	706	-	Beam	Concrete Truss_diagonal	(same as start)	f'c_8.5ksi	0.0000	10.9641	0.0000	0.0000	0.0000	0	Main Span
709	706	801	-	Beam	Concrete Truss_diagonal	(same as start)	f'c_8.5ksi	0.0000	2.8398	0.0000	0.0000	0.0000	0	Main Span
710	8	707	-	Beam	Concrete Truss_diagonal	(same as start)	f'c_8.5ksi	0.0000	5.0032	0.0000	0.0000	0.0000	0	Main Span
711	707	708	-	Beam	Concrete Truss_diagonal	(same as start)	f'c_8.5ksi	0.0000	26.7166	0.0000	0.0000	0.0000	0	Main Span
712	708	802	-	Beam	Concrete Truss_diagonal	(same as start)	f'c_8.5ksi	0.0000	3.5638	0.0000	0.0000	0.0000	0	Main Span
713	12	709	-	Beam	Concrete Truss_diagonal	(same as start)	f'c_8.5ksi	0.0000	1.7817	0.0000	0.0000	0.0000	0	Main Span
714	709	710	-	Beam	Concrete Truss_diagonal	(same as start)	f'c_8.5ksi	0.0000	11.8244	0.0000	0.0000	0.0000	0	Main Span
715	710	802	-	Beam	Concrete Truss_diagonal	(same as start)	f'c_8.5ksi	0.0000	2.0038	0.0000	0.0000	0.0000	0	Main Span
716	13	711	-	Beam	Concrete Truss_diagonal	(same as start)	f'c_8.5ksi	0.0000	4.3685	0.0000	0.0000	0.0000	0	Main Span
717	711	712	-	Beam	Concrete Truss_diagonal	(same as start)	f'c_8.5ksi	0.0000	23.7603	0.0000	0.0000	0.0000	0	Main Span
718	712	803	-	Beam	Concrete Truss_diagonal	(same as start)	f'c_8.5ksi	0.0000	3.0907	0.0000	0.0000	0.0000	0	Main Span
719	17	713	-	Beam	Concrete Truss_diagonal	(same as start)	f'c_8.5ksi	0.0000	1.7634	0.0000	0.0000	0.0000	0	Main Span
720	713	714	-	Beam	Concrete Truss_diagonal	(same as start)	f'c_8.5ksi	0.0000	13.3331	0.0000	0.0000	0.0000	0	Main Span
721	714	803	-	Beam	Concrete Truss_diagonal	(same as start)	f'c_8.5ksi	0.0000	1.5302	0.0000	0.0000	0.0000	0	Main Span
722	18	715	-	Beam	Concrete Truss_diagonal	(same as start)	f'c_8.5ksi	0.0000	3.5653	0.0000	0.0000	0.0000	0	Main Span
723	715	716	-	Beam	Concrete Truss_diagonal	(same as start)	f'c_8.5ksi	0.0000	20.0922	0.0000	0.0000	0.0000	0	Main Span
724	716	804	-	Beam	Concrete Truss_diagonal	(same as start)	f'c_8.5ksi	0.0000	2.4646	0.0000	0.0000	0.0000	0	Main Span
725	22	717	-	Beam	Concrete Truss_diagonal	(same as start)	f'c_8.5ksi	0.0000	2.705	0.0000	0.0000	0.0000	0	Main Span
726	717	718	-	Beam	Concrete Truss_diagonal	(same as start)	f'c_8.5ksi	0.0000	16.6407	0.0000	0.0000	0.0000	0	Main Span
727	718	804	-	Beam	Concrete Truss_diagonal	(same as start)	f'c_8.5ksi	0.0000	1.8424	0.0000	0.0000	0.0000	0	Main Span
728	23	719	-	Beam	Concrete Truss_diagonal	(same as start)	f'c_8.5ksi	0.0000	2.4859	0.0000	0.0000	0.0000	0	Main Span
729	719	720	-	Beam	Concrete Truss_diagonal	(same as start)	f'c_8.5ksi	0.0000	15.8522	0.0000	0.0000	0.0000	0	Main Span
730	720	805	-	Beam	Concrete Truss_diagonal	(same as start)	f'c_8.5ksi	0.0000	1.6756	0.0000	0.0000	0.0000	0	Main Span

INPUT : Members

ID	I-Joint	J-Joint	Span	Type	Section at Start	Section at End	Material	Prestress Force (kips)	Length (ft)	Rigid Zone from Start (x/L)	Rigid Zone from End (x/L)	Orientation Angle (deg)	Castin g (day)	Structure Group
731	27	721	-	Beam	Concrete Truss_diagonal	(same as start)	f'c_8.5ksi	0.0000	4.0964	0.0000	0.0000	0.0000	0	Main Span
732	721	722	-	Beam	Concrete Truss_diagonal	(same as start)	f'c_8.5ksi	0.0000	22.6077	0.0000	0.0000	0.0000	0	Main Span
733	722	805	-	Beam	Concrete Truss_diagonal	(same as start)	f'c_8.5ksi	0.0000	2.903	0.0000	0.0000	0.0000	0	Main Span
740	29	727	-	Beam	Concrete Truss_diagonal	(same as start)	f'c_8.5ksi	0.0000	4.1444	0.0000	0.0000	0.0000	90	Back Span
741	727	728	-	Beam	Concrete Truss_diagonal	(same as start)	f'c_8.5ksi	0.0000	22.7955	0.0000	0.0000	0.0000	90	Back Span
742	728	806	-	Beam	Concrete Truss_diagonal	(same as start)	f'c_8.5ksi	0.0000	2.9393	0.0000	0.0000	0.0000	90	Back Span
743	33	729	-	Beam	Concrete Truss_diagonal	(same as start)	f'c_8.5ksi	0.0000	3.6214	0.0000	0.0000	0.0000	90	Back Span
744	729	730	-	Beam	Concrete Truss_diagonal	(same as start)	f'c_8.5ksi	0.0000	14.5551	0.0000	0.0000	0.0000	90	Back Span
745	730	806	-	Beam	Concrete Truss_diagonal	(same as start)	f'c_8.5ksi	0.0000	1.6528	0.0000	0.0000	0.0000	90	Back Span
746	34	731	-	Beam	Concrete Truss_diagonal	(same as start)	f'c_8.5ksi	0.0000	3.5032	0.0000	0.0000	0.0000	90	Back Span
747	731	732	-	Beam	Concrete Truss_diagonal	(same as start)	f'c_8.5ksi	0.0000	8.5359	0.0000	0.0000	0.0000	90	Back Span
748	732	807	-	Beam	Concrete Truss_diagonal	(same as start)	f'c_8.5ksi	0.0000	3.5643	0.0000	0.0000	0.0000	90	Back Span
749	38	733	-	Beam	Concrete Truss_diagonal	(same as start)	f'c_8.5ksi	0.0000	4.1123	0.0000	0.0000	0.0000	90	Back Span
750	733	734	-	Beam	Concrete Truss_diagonal	(same as start)	f'c_8.5ksi	0.0000	14.1214	0.0000	0.0000	0.0000	90	Back Span
751	734	807	-	Beam	Concrete Truss_diagonal	(same as start)	f'c_8.5ksi	0.0000	3.3076	0.0000	0.0000	0.0000	90	Back Span
752	39	735	-	Beam	Concrete Truss_diagonal	(same as start)	f'c_8.5ksi	0.0000	4.0601	0.0000	0.0000	0.0000	90	Back Span
753	735	736	-	Beam	Concrete Truss_diagonal	(same as start)	f'c_8.5ksi	0.0000	7.6343	0.0000	0.0000	0.0000	90	Back Span
754	736	808	-	Beam	Concrete Truss_diagonal	(same as start)	f'c_8.5ksi	0.0000	4.2002	0.0000	0.0000	0.0000	90	Back Span
755	43	737	-	Beam	Concrete Truss_diagonal	(same as start)	f'c_8.5ksi	0.0000	4.5914	0.0000	0.0000	0.0000	90	Back Span
756	737	738	-	Beam	Concrete Truss_diagonal	(same as start)	f'c_8.5ksi	0.0000	14.3266	0.0000	0.0000	0.0000	90	Back Span
757	738	808	-	Beam	Concrete Truss_diagonal	(same as start)	f'c_8.5ksi	0.0000	3.9814	0.0000	0.0000	0.0000	90	Back Span
758	44	739	-	Beam	Concrete Truss_diagonal	(same as start)	f'c_8.5ksi	0.0000	4.579	0.0000	0.0000	0.0000	90	Back Span
759	739	740	-	Beam	Concrete Truss_diagonal	(same as start)	f'c_8.5ksi	0.0000	7.0097	0.0000	0.0000	0.0000	90	Back Span
760	740	809	-	Beam	Concrete Truss_diagonal	(same as start)	f'c_8.5ksi	0.0000	4.7797	0.0000	0.0000	0.0000	90	Back Span
761	48	741	-	Beam	Concrete Truss_diagonal	(same as start)	f'c_8.5ksi	0.0000	5.0245	0.0000	0.0000	0.0000	90	Back Span
762	741	742	-	Beam	Concrete Truss_diagonal	(same as start)	f'c_8.5ksi	0.0000	14.3589	0.0000	0.0000	0.0000	90	Back Span
763	742	809	-	Beam	Concrete Truss_diagonal	(same as start)	f'c_8.5ksi	0.0000	4.5907	0.0000	0.0000	0.0000	90	Back Span
764	49	743	-	Beam	Concrete Truss_diagonal	(same as start)	f'c_8.5ksi	0.0000	5.0428	0.0000	0.0000	0.0000	90	Back Span
765	743	744	-	Beam	Concrete Truss_diagonal	(same as start)	f'c_8.5ksi	0.0000	6.5298	0.0000	0.0000	0.0000	90	Back Span
766	744	810	-	Beam	Concrete Truss_diagonal	(same as start)	f'c_8.5ksi	0.0000	5.3029	0.0000	0.0000	0.0000	90	Back Span
767	53	745	-	Beam	Concrete Truss_diagonal	(same as start)	f'c_8.5ksi	0.0000	3.3299	0.0000	0.0000	0.0000	90	Back Span
768	745	746	-	Beam	Concrete Truss_diagonal	(same as start)	f'c_8.5ksi	0.0000	16.3969	0.0000	0.0000	0.0000	90	Back Span
769	746	810	-	Beam	Concrete Truss_diagonal	(same as start)	f'c_8.5ksi	0.0000	5.1245	0.0000	0.0000	0.0000	90	Back Span
770	54	747	-	Beam	End Diagonal	(same as start)	f'c_8.5ksi	0.0000	1.6042	0.0000	0.0000	0.0000	90	Back Span

INPUT : Members

ID	I-Joint	J-Joint	Span	Type	Section at Start	Section at End	Material	Prestress Force (kips)	Length (ft)	Rigid Zone from Start (x/L)	Rigid Zone from End (x/L)	Orientation Angle (deg)	Castin g (day)	Structure Group
771	747	748	-	Beam	End Diagonal	(same as start)	f'c_8.5ksi	0.0000	12.9688	0.0000	0.0000	0.0000	90	Back Span
772	748	161	-	Beam	End Diagonal	(same as start)	f'c_8.5ksi	0.0000	1.25	0.0000	0.0000	0.0000	90	Back Span
800	801	106	-	Beam	Rigid Link	(same as start)	Rigid	0.0000	.5524	0.0000	0.0000	0.0000	0	Main Span
801	802	111	-	Beam	Rigid Link	(same as start)	Rigid	0.0000	.5038	0.0000	0.0000	0.0000	0	Main Span
802	803	116	-	Beam	Rigid Link	(same as start)	Rigid	0.0000	.455	0.0000	0.0000	0.0000	0	Main Span
803	804	121	-	Beam	Rigid Link	(same as start)	Rigid	0.0000	.379	0.0000	0.0000	0.0000	0	Main Span
804	805	126	-	Beam	Rigid Link	(same as start)	Rigid	0.0000	.293	0.0000	0.0000	0.0000	90	Back Span
805	806	136	-	Beam	Rigid Link	(same as start)	Rigid	0.0000	.2744	0.0000	0.0000	0.0000	90	Back Span
806	807	141	-	Beam	Rigid Link	(same as start)	Rigid	0.0000	.3109	0.0000	0.0000	0.0000	90	Back Span
807	808	146	-	Beam	Rigid Link	(same as start)	Rigid	0.0000	.3264	0.0000	0.0000	0.0000	90	Back Span
808	809	151	-	Beam	Rigid Link	(same as start)	Rigid	0.0000	.3408	0.0000	0.0000	0.0000	90	Back Span
809	810	156	-	Beam	Rigid Link	(same as start)	Rigid	0.0000	.3479	0.0000	0.0000	0.0000	90	Back Span
810	801	105	-	Beam	Rigid Link	(same as start)	Rigid	0.0000	.2384	0.0000	0.0000	0.0000	0	Main Span
811	802	110	-	Beam	Rigid Link	(same as start)	Rigid	0.0000	.2183	0.0000	0.0000	0.0000	0	Main Span
812	803	115	-	Beam	Rigid Link	(same as start)	Rigid	0.0000	.2401	0.0000	0.0000	0.0000	0	Main Span
813	804	120	-	Beam	Rigid Link	(same as start)	Rigid	0.0000	.2954	0.0000	0.0000	0.0000	0	Main Span
814	805	125	-	Beam	Rigid Link	(same as start)	Rigid	0.0000	.4224	0.0000	0.0000	0.0000	0	Main Span
815	806	137	-	Beam	Rigid Link	(same as start)	Rigid	0.0000	.4196	0.0000	0.0000	0.0000	90	Back Span
816	807	142	-	Beam	Rigid Link	(same as start)	Rigid	0.0000	.2228	0.0000	0.0000	0.0000	90	Back Span
817	808	147	-	Beam	Rigid Link	(same as start)	Rigid	0.0000	.2229	0.0000	0.0000	0.0000	90	Back Span
818	809	152	-	Beam	Rigid Link	(same as start)	Rigid	0.0000	.2347	0.0000	0.0000	0.0000	90	Back Span
819	810	157	-	Beam	Rigid Link	(same as start)	Rigid	0.0000	.2381	0.0000	0.0000	0.0000	90	Back Span

INPUT : Springs

ID	I-Joint	J-Joint	Type	Direction	K Tension (kips/in)	K Compression (kips/in)	Maximum Tension (kips or kips-in)	Maximum Compression (kips or kips-in)	Hook (in)	Gap (in)	Properties Definition	Structure / Construction Group
1	1001	1002	Linear	Trans. Z	12,037.2000	12,037.2000					(none)	Piers
2	1001	1002	Linear	Trans. X	24.0000	24.0000					(none)	Piers
3	1001	1002	Linear	Trans. Y	24.0000	24.0000					(none)	Piers
4	1011	1012	Linear	Trans. Z	12,037.2000	12,037.2000					(none)	Piers
5	1011	1012	Linear	Trans. X	24.0000	24.0000					(none)	Piers
6	1011	1012	Linear	Trans. Y	24.0000	24.0000					(none)	Piers
7	3001	3002	Linear	Trans. Z	12,037.2000	12,037.2000					(none)	Piers

INPUT : Springs

ID	I-Joint	J-Joint	Type	Direction	K Tension (kips/in)	K Compression (kips/in)	Maximum Tension (kips or kips-in)	Maximum Compression (kips or kips-in)	Hook (in)	Gap (in)	Properties Definition	Structure / Construction Group
8	3001	3002	Linear	Trans. X	24.0000	24.0000					(none)	Piers
9	3001	3002	Linear	Trans. Y	24.0000	24.0000					(none)	Piers
10	3011	3012	Linear	Trans. Z	12,037.2000	12,037.2000					(none)	Piers
11	3011	3012	Linear	Trans. X	24.0000	24.0000					(none)	Piers
12	3011	3012	Linear	Trans. Y	24.0000	24.0000					(none)	Piers
13	2004	(none)	Linear	K(6x6)	0.0000	0.0000					Pylon	Piers

INPUT : Slave/Masters

Slave Joint	Master Joint X-Tran	Master Joint Y-Tran	Master Joint Z-Tran	Master Joint X-Rot	Master Joint Y-Rot	Master Joint Z-Rot
2000	28	28	28	28	28	28

INPUT : Tendons

Tendon Name	Design Grou	Material	Exposure	Strand Area (per strand)	# of Strands	Jacking Force @ Start	Jacking Force @ End (kips)	Jacking End	Anchor Set (ft)	Wobble Coefficient	Curvature Friction Coefficien	Peak Stress Ratio -	Peak Stress Ratio -	Elongation After	Elongation After	Elongation @ Left of	Elongation @ Right of
Main Deck D1-L	(none	Steel PT	Post-	0.0015	12	527.2929	0	Start	0.0313	0.0002	0.2500	0.7000	0.7400	1.1835	0	0	0
Main Deck D1-R	(none	Steel PT	Post-	0.0015	12	527.2929	0	Start	0.0313	0.0002	0.2500	0.7000	0.7400	1.1835	0	0	0
Main Deck D2-L	(none	Steel PT	Post-	0.0015	19	834.8804	0	Start	0.0313	0.0002	0.2500	0.7000	0.7400	1.1835	0	0	0
Main Deck D2-R	(none	Steel PT	Post-	0.0015	19	834.8804	0	Start	0.0313	0.0002	0.2500	0.7000	0.7400	1.1835	0	0	0
Main Deck D3-L	(none	Steel PT	Post-	0.0015	19	834.8804	0	Start	0.0313	0.0002	0.2500	0.7000	0.7400	1.1835	0	0	0
Main Deck D3-R	(none	Steel PT	Post-	0.0015	19	834.8804	0	Start	0.0313	0.0002	0.2500	0.7000	0.7400	1.1835	0	0	0
Main Deck D4-L	(none	Steel PT	Post-	0.0015	19	834.8804	0	Start	0.0313	0.0002	0.2500	0.7000	0.7400	1.1835	0	0	0
Main Deck D4-R	(none	Steel PT	Post-	0.0015	19	834.8804	0	Start	0.0313	0.0002	0.2500	0.7000	0.7400	1.1835	0	0	0
Main Deck D5-L	(none	Steel PT	Post-	0.0015	19	834.8804	0	Start	0.0313	0.0002	0.2500	0.7000	0.7400	1.1835	0	0	0
Main Deck D5-R	(none	Steel PT	Post-	0.0015	19	834.8804	0	Start	0.0313	0.0002	0.2500	0.7000	0.7400	1.1835	0	0	0
Main Deck D6-L	(none	Steel PT	Post-	0.0015	19	834.8804	0	Start	0.0313	0.0002	0.2500	0.7000	0.7400	1.1835	0	0	0
Main Deck D6-R	(none	Steel PT	Post-	0.0015	19	834.8804	0	Start	0.0313	0.0002	0.2500	0.7000	0.7400	1.1835	0	0	0
Main Canopy C2-L	(none	Steel PT	Post-	0.0015	12	530.6343	0	Start	0.0313	0.0002	0.2500	0.7000	0.7400	1.1288	0	0	0
Main Canopy C2-R	(none	Steel PT	Post-	0.0015	12	530.6343	0	Start	0.0313	0.0002	0.2500	0.7000	0.7400	1.1288	0	0	0
Main Canopy C3-L	(none	Steel PT	Post-	0.0015	12	533.8417	0	Start	0.0313	0.0002	0.2500	0.7000	0.7400	1.1366	0	0	0
Main Canopy C3-R	(none	Steel PT	Post-	0.0015	12	533.8417	0	Start	0.0313	0.0002	0.2500	0.7000	0.7400	1.1366	0	0	0
Back Deck D7-L	(none	Steel PT	Post-	0.0015	19	0	828.2799	End	0.0313	0.0002	0.2500	0.7000	0.7400	.6643	0	0	0
Back Deck D7-R	(none	Steel PT	Post-	0.0015	19	0	828.2799	End	0.0313	0.0002	0.2500	0.7000	0.7400	.6643	0	0	0

INPUT : Tendons

Tendon Name	Design Grou	Material	Exposure	Strand Area (per strand)	# of Strands	Jacking Force @ Start	Jacking Force @ End (kips)	Jacking End	Anchor Set (ft)	Wobble Coefficient	Curvature Friction Coefficien	Peak Stress Ratio -	Peak Stress Ratio -	Elongation After	Elongation After	Elongation @ Left of	Elongation @ Right of
Back Deck D8-L	(none	Steel PT	Post-	0.0015	19	0	828.2799	End	0.0313	0.0002	0.2500	0.7000	0.7400	.6643	0	0	0
Back Deck D8-R	(none	Steel PT	Post-	0.0015	19	0	828.2799	End	0.0313	0.0002	0.2500	0.7000	0.7400	.6643	0	0	0
Back Deck D9-L	(none	Steel PT	Post-	0.0015	19	0	828.2799	End	0.0313	0.0002	0.2500	0.7000	0.7400	.6643	0	0	0
Back Deck D9-R	(none	Steel PT	Post-	0.0015	19	0	828.2799	End	0.0313	0.0002	0.2500	0.7000	0.7400	.6643	0	0	0
Back Canopy C5-L	(none	Steel PT	Post-	0.0015	12	0	518.7349	End	0.0313	0.0002	0.2500	0.7000	0.7400	.6288	0	0	0
Back Canopy C5-R	(none	Steel PT	Post-	0.0015	12	0	518.7349	End	0.0313	0.0002	0.2500	0.7000	0.7400	.6288	0	0	0
Full Length - Canopy	(none	Steel PT	Post-	0.0015	12	0	555.7080	End	0.0313	0.0002	0.2500	0.7000	0.7400	1.8674	0	0	0
Full Length - Canopy	(none	Steel PT	Post-	0.0015	12	0	555.7080	End	0.0313	0.0002	0.2500	0.7000	0.7400	1.8674	0	0	0
Full Length - Canopy	(none	Steel PT	Post-	0.0015	12	0	555.7080	End	0.0313	0.0002	0.2500	0.7000	0.7400	1.7959	0	0	0
Full Length - Canopy	(none	Steel PT	Post-	0.0015	12	0	555.7080	End	0.0313	0.0002	0.2500	0.7000	0.7400	1.7959	0	0	0

INPUT : CEB-FIP 78

Name	Notional Thickness Coefficient	Creep Coefficient (Environment)	Creep Coefficient (Notional Thickness)	Shrinkage Coef (Environment)	Shrinkage Coef (Notional Thickness)	Delayed Modulus of Elasticity Coef	Creep Factor	Shrinkage Factor	Relaxation Factor	Assigned
concrete	0.0000	0.0000	0.0000	0.0000	0.0000	0.0000	1.0000	1.0000	1.0000	Yes
steel	0.0000	0.0000	0.0000	0.0000	0.0000	0.0000	1.0000	1.0000	1.0000	Yes

INPUT : More Material Properties

Name	Yield Stress (kips/ft²)	Post-yield to Initial Slope Ratio	Concrete Strength Specimen	Concrete fc28 or Steel Fu (kips/ft²)	Concrete Cement Hardening Type	Tendon GUTS (kips/ft²)	Material Time-Effect	Assigned
Rigid	0.00	0.020	Cylinder	0.00	Not Concrete	0.00	(NONE)	Yes
Steel Pipe	19,440.00	0.020	Cylinder	0.00	Not Concrete	0.00	(NONE)	Yes
Steel PT	34,992.00	0.020	Cylinder	0.00	Not Concrete	38,880.00	steel	Yes
f'c_5.5	0.00	0.020	Cylinder	792.00	Not Concrete	0.00	(NONE)	Yes
f'c_8.5ksi	0.00	0.020	Cylinder	1,224.00	Normal	0.00	concrete	Yes

TENDON Main Deck D1-L

Point Type	Reference Object Type	Reference Object or Range	Offset X (ft)	Offset Y (ft)	Offset Z (ft)	X Reference	Y Reference	Z Reference	Curvature Type			Width
geometry	member	60	0.6667	1.8333	-0.3125	Start	Reference Line	Reference Line	No Curve			
path only	member	1-2										
geometry	member	3	0.8750	1.8333	0.0000	Start	Reference Line	Reference Line	Circular Radius	15.0000		

TENDON Main Deck D1-L

Point Type	Reference Object Type	Reference Object or Range	Offset X (ft)	Offset Y (ft)	Offset Z (ft)	X Reference	Y Reference	Z Reference	Curvature Type			Width
path only	member	4-25										
geometry	member	26	1.3542	1.8333	0.0000	End	Reference Line	Reference Line	Circular Radius	15.0000		
geometry	member	27	1.0000	1.8333	-0.1875	End	Reference Line	Reference Line	No Curve			

TENDON Main Deck D1-R

Point Type	Reference Object Type	Reference Object or Range	Offset X (ft)	Offset Y (ft)	Offset Z (ft)	X Reference	Y Reference	Z Reference	Curvature Type			Width
geometry	member	60	0.6667	-1.8333	-0.3125	Start	Reference Line	Reference Line	No Curve			
path only	member	1-2										
geometry	member	3	0.8750	-1.8333	0.0000	Start	Reference Line	Reference Line	Circular Radius	15.0000		
path only	member	4-25										
geometry	member	26	1.3542	-1.8333	0.0000	End	Reference Line	Reference Line	Circular Radius	15.0000		
geometry	member	27	1.0000	-1.8333	-0.1875	End	Reference Line	Reference Line	No Curve			

TENDON Main Deck D2-L

Point Type	Reference Object Type	Reference Object or Range	Offset X (ft)	Offset Y (ft)	Offset Z (ft)	X Reference	Y Reference	Z Reference	Curvature Type			Width
geometry	member	60	0.6667	3.1667	-0.3125	Start	Reference Line	Reference Line	No Curve			
path only	member	1-2										
geometry	member	3	0.8750	3.1667	0.0000	Start	Reference Line	Reference Line	Circular Radius	15.0000		
path only	member	4-25										
geometry	member	26	1.3542	3.1667	0.0000	End	Reference Line	Reference Line	Circular Radius	15.0000		
geometry	member	27	1.0000	3.1667	-0.1875	End	Reference Line	Reference Line	No Curve			

TENDON Main Deck D2-R

Point Type	Reference Object Type	Reference Object or Range	Offset X (ft)	Offset Y (ft)	Offset Z (ft)	X Reference	Y Reference	Z Reference	Curvature Type			Width
geometry	member	60	0.6667	-3.1667	-0.3125	Start	Reference Line	Reference Line	No Curve			
path only	member	1-2										
geometry	member	3	0.8750	-3.1667	0.0000	Start	Reference Line	Reference Line	Circular Radius	15.0000		
path only	member	4-25										
geometry	member	26	1.3542	-3.1667	0.0000	End	Reference Line	Reference Line	Circular Radius	15.0000		

TENDON Main Deck D2-R

Point Type	Reference Object Type	Reference Object or Range	Offset X (ft)	Offset Y (ft)	Offset Z (ft)	X Reference	Y Reference	Z Reference	Curvature Type			Width
geometry	member	27	1.0000	-3.1667	-0.1875	End	Reference Line	Reference Line	No Curve			

TENDON Main Deck D3-L

Point Type	Reference Object Type	Reference Object or Range	Offset X (ft)	Offset Y (ft)	Offset Z (ft)	X Reference	Y Reference	Z Reference	Curvature Type			Width
geometry	member	60	0.6667	4.6667	-0.3125	Start	Reference Line	Reference Line	No Curve			
path only	member	1-2										
geometry	member	3	0.8750	4.6667	0.0000	Start	Reference Line	Reference Line	Circular Radius	15.0000		
path only	member	4-25										
geometry	member	26	1.3542	4.6667	0.0000	End	Reference Line	Reference Line	Circular Radius	15.0000		
geometry	member	27	1.0000	4.6667	-0.1875	End	Reference Line	Reference Line	No Curve			

TENDON Main Deck D3-R

Point Type	Reference Object Type	Reference Object or Range	Offset X (ft)	Offset Y (ft)	Offset Z (ft)	X Reference	Y Reference	Z Reference	Curvature Type			Width
geometry	member	60	0.6667	-4.6667	-0.3125	Start	Reference Line	Reference Line	No Curve			
path only	member	1-2										
geometry	member	3	0.8750	-4.6667	0.0000	Start	Reference Line	Reference Line	Circular Radius	15.0000		
path only	member	4-25										
geometry	member	26	1.3542	-4.6667	0.0000	End	Reference Line	Reference Line	Circular Radius	15.0000		
geometry	member	27	1.0000	-4.6667	-0.1875	End	Reference Line	Reference Line	No Curve			

TENDON Main Deck D4-L

Point Type	Reference Object Type	Reference Object or Range	Offset X (ft)	Offset Y (ft)	Offset Z (ft)	X Reference	Y Reference	Z Reference	Curvature Type			Width
geometry	member	60	0.6667	6.1667	-0.3125	Start	Reference Line	Reference Line	No Curve			
path only	member	1-2										
geometry	member	3	0.8750	6.1667	0.0000	Start	Reference Line	Reference Line	Circular Radius	15.0000		
path only	member	4-25										
geometry	member	26	1.3542	6.1667	0.0000	End	Reference Line	Reference Line	Circular Radius	15.0000		
geometry	member	27	1.0000	6.1667	-0.1875	End	Reference Line	Reference Line	No Curve			

TENDON Main Deck D4-R

Point Type	Reference Object Type	Reference Object or Range	Offset X (ft)	Offset Y (ft)	Offset Z (ft)	X Reference	Y Reference	Z Reference	Curvature Type			Width
geometry	member	60	0.6667	-6.1667	-0.3125	Start	Reference Line	Reference Line	No Curve			
path only	member	1-2										
geometry	member	3	0.8750	-6.1667	0.0000	Start	Reference Line	Reference Line	Circular Radius	15.0000		
path only	member	4-25										
geometry	member	26	1.3542	-6.1667	0.0000	End	Reference Line	Reference Line	Circular Radius	15.0000		
geometry	member	27	1.0000	-6.1667	-0.1875	End	Reference Line	Reference Line	No Curve			

TENDON Main Deck D5-L

Point Type	Reference Object Type	Reference Object or Range	Offset X (ft)	Offset Y (ft)	Offset Z (ft)	X Reference	Y Reference	Z Reference	Curvature Type			Width
geometry	member	60	0.6667	7.6667	-0.3125	Start	Reference Line	Reference Line	No Curve			
path only	member	1-2										
geometry	member	3	0.8750	7.6667	0.0000	Start	Reference Line	Reference Line	Circular Radius	15.0000		
path only	member	4-25										
geometry	member	26	1.3542	7.6667	0.0000	End	Reference Line	Reference Line	Circular Radius	15.0000		
geometry	member	27	1.0000	7.6667	-0.1875	End	Reference Line	Reference Line	No Curve			

TENDON Main Deck D5-R

Point Type	Reference Object Type	Reference Object or Range	Offset X (ft)	Offset Y (ft)	Offset Z (ft)	X Reference	Y Reference	Z Reference	Curvature Type			Width
geometry	member	60	0.6667	-7.6667	-0.3125	Start	Reference Line	Reference Line	No Curve			
path only	member	1-2										
geometry	member	3	0.8750	-7.6667	0.0000	Start	Reference Line	Reference Line	Circular Radius	15.0000		
path only	member	4-25										
geometry	member	26	1.3542	-7.6667	0.0000	End	Reference Line	Reference Line	Circular Radius	15.0000		
geometry	member	27	1.0000	-7.6667	-0.1875	End	Reference Line	Reference Line	No Curve			

TENDON Main Deck D6-L

Point Type	Reference Object Type	Reference Object or Range	Offset X (ft)	Offset Y (ft)	Offset Z (ft)	X Reference	Y Reference	Z Reference	Curvature Type			Width
geometry	member	60	0.6667	9.1667	-0.3125	Start	Reference Line	Reference Line	No Curve			

TENDON Main Deck D6-L

Point Type	Reference Object Type	Reference Object or Range	Offset X (ft)	Offset Y (ft)	Offset Z (ft)	X Reference	Y Reference	Z Reference	Curvature Type			Width
path only	member	1-2										
geometry	member	3	0.8750	9.1667	0.0000	Start	Reference Line	Reference Line	Circular Radius	15.0000		
path only	member	4-25										
geometry	member	26	1.3542	9.1667	0.0000	End	Reference Line	Reference Line	Circular Radius	15.0000		
geometry	member	27	1.0000	9.1667	-0.1875	End	Reference Line	Reference Line	No Curve			

TENDON Main Deck D6-R

Point Type	Reference Object Type	Reference Object or Range	Offset X (ft)	Offset Y (ft)	Offset Z (ft)	X Reference	Y Reference	Z Reference	Curvature Type			Width
geometry	member	60	0.6667	-9.1667	-0.3125	Start	Reference Line	Reference Line	No Curve			
path only	member	1-2										
geometry	member	3	0.8750	-9.1667	0.0000	Start	Reference Line	Reference Line	Circular Radius	15.0000		
path only	member	4-25										
geometry	member	26	1.3542	-9.1667	0.0000	End	Reference Line	Reference Line	Circular Radius	15.0000		
geometry	member	27	1.0000	-9.1667	-0.1875	End	Reference Line	Reference Line	No Curve			

TENDON Main Canopy C2-L

Point Type	Reference Object Type	Reference Object or Range	Offset X (ft)	Offset Y (ft)	Offset Z (ft)	X Reference	Y Reference	Z Reference	Curvature Type			Width
geometry	member	162	0.6667	2.4167	0.3646	Start	Reference Line	Reference Line	No Curve			
geometry	member	101	1.5000	2.4167	0.0938	Start	Reference Line	Reference Line	Circular Radius	15.0000		
geometry	member	102	7.0000	2.4167	0.0938	Start	Reference Line	Reference Line	No Curve			
geometry	member	103	2.1458	3.5833	-0.0104	Start	Reference Line	Reference Line	No Curve			
path only	member	104-129										
geometry	member	130	0.0000	3.5833	-0.0104	Start	Reference Line	Reference Line	Circular Radius	10.0000		
geometry	member	130	1.0000	3.5833	0.2500	End	Reference Line	Reference Line	No Curve			

TENDON Main Canopy C2-R

Point Type	Reference Object Type	Reference Object or Range	Offset X (ft)	Offset Y (ft)	Offset Z (ft)	X Reference	Y Reference	Z Reference	Curvature Type			Width
geometry	member	162	0.6667	-2.4167	0.3646	Start	Reference Line	Reference Line	No Curve			
geometry	member	101	1.5000	-2.4167	0.0938	Start	Reference Line	Reference Line	Circular Radius	15.0000		

TENDON Main Canopy C2-R

Point Type	Reference Object Type	Reference Object or Range	Offset X (ft)	Offset Y (ft)	Offset Z (ft)	X Reference	Y Reference	Z Reference	Curvature Type			Width
geometry	member	102	7.0000	-2.4167	0.0938	Start	Reference Line	Reference Line	No Curve			
geometry	member	103	2.1458	-3.5833	-0.0104	Start	Reference Line	Reference Line	No Curve			
path only	member	104-129										
geometry	member	130	0.0000	-3.5833	-0.0104	Start	Reference Line	Reference Line	Circular Radius	10.0000		
geometry	member	130	1.0000	-3.5833	0.2500	End	Reference Line	Reference Line	No Curve			

TENDON Main Canopy C3-L

Point Type	Reference Object Type	Reference Object or Range	Offset X (ft)	Offset Y (ft)	Offset Z (ft)	X Reference	Y Reference	Z Reference	Curvature Type			Width
geometry	member	162	0.6667	3.6667	0.1458	Start	Reference Line	Reference Line	No Curve			
geometry	member	101	1.5000	3.6667	-0.1146	Start	Reference Line	Reference Line	Circular Radius	15.0000		
geometry	member	102	7.0000	3.6667	-0.1146	Start	Reference Line	Reference Line	No Curve			
geometry	member	103	2.1458	4.8333	-0.2604	Start	Reference Line	Reference Line	No Curve			
path only	member	104-129										
geometry	member	130	0.0000	4.8333	-0.2604	Start	Reference Line	Reference Line	Circular Radius	10.0000		
geometry	member	130	1.0000	4.8333	0.0000	End	Reference Line	Reference Line	No Curve			

TENDON Main Canopy C3-R

Point Type	Reference Object Type	Reference Object or Range	Offset X (ft)	Offset Y (ft)	Offset Z (ft)	X Reference	Y Reference	Z Reference	Curvature Type			Width
geometry	member	162	0.6667	-3.6667	0.1458	Start	Reference Line	Reference Line	No Curve			
geometry	member	101	1.5000	-3.6667	-0.1146	Start	Reference Line	Reference Line	Circular Radius	15.0000		
geometry	member	102	7.0000	-3.6667	-0.1146	Start	Reference Line	Reference Line	No Curve			
geometry	member	103	2.1458	-4.8333	-0.2604	Start	Reference Line	Reference Line	No Curve			
path only	member	104-129										
geometry	member	130	0.0000	-4.8333	-0.2604	Start	Reference Line	Reference Line	Circular Radius	10.0000		
geometry	member	130	1.0000	-4.8333	0.0000	End	Reference Line	Reference Line	No Curve			

TENDON Back Deck D7-L

Point Type	Reference Object Type	Reference Object or Range	Offset X (ft)	Offset Y (ft)	Offset Z (ft)	X Reference	Y Reference	Z Reference	Curvature Type			Width
geometry	member	28	1.0000	4.6667	-0.1875	Start	Reference Line	Reference Line	No Curve			

TENDON Back Deck D7-L

Point Type	Reference Object Type	Reference Object or Range	Offset X (ft)	Offset Y (ft)	Offset Z (ft)	X Reference	Y Reference	Z Reference	Curvature Type			Width
geometry	member	29	1.3542	4.6667	0.0000	Start	Reference Line	Reference Line	Circular Radius	15.0000		
path only	member	30-52										
geometry	member	53	0.9167	4.6667	0.0000	End	Reference Line	Reference Line	Circular Radius	10.0000		
path only	member	54-55										
geometry	member	56	0.8333	4.6667	-0.5729	Start	Reference Line	Reference Line	No Curve			

TENDON Back Deck D7-R

Point Type	Reference Object Type	Reference Object or Range	Offset X (ft)	Offset Y (ft)	Offset Z (ft)	X Reference	Y Reference	Z Reference	Curvature Type			Width
geometry	member	28	1.0000	-4.6667	-0.1875	Start	Reference Line	Reference Line	No Curve			
geometry	member	29	1.3542	-4.6667	0.0000	Start	Reference Line	Reference Line	Circular Radius	15.0000		
path only	member	30-52										
geometry	member	53	0.9167	-4.6667	0.0000	End	Reference Line	Reference Line	Circular Radius	10.0000		
path only	member	54-55										
geometry	member	56	0.8333	-4.6667	-0.5729	Start	Reference Line	Reference Line	No Curve			

TENDON Back Deck D8-L

Point Type	Reference Object Type	Reference Object or Range	Offset X (ft)	Offset Y (ft)	Offset Z (ft)	X Reference	Y Reference	Z Reference	Curvature Type			Width
geometry	member	28	1.0000	6.1667	-0.1875	Start	Reference Line	Reference Line	No Curve			
geometry	member	29	1.3542	6.1667	0.0000	Start	Reference Line	Reference Line	Circular Radius	15.0000		
path only	member	30-52										
geometry	member	53	0.9167	6.1667	0.0000	End	Reference Line	Reference Line	Circular Radius	10.0000		
path only	member	54-55										
geometry	member	56	0.8333	6.1667	-0.5729	Start	Reference Line	Reference Line	No Curve			

TENDON Back Deck D8-R

Point Type	Reference Object Type	Reference Object or Range	Offset X (ft)	Offset Y (ft)	Offset Z (ft)	X Reference	Y Reference	Z Reference	Curvature Type			Width
geometry	member	28	1.0000	-6.1667	-0.1875	Start	Reference Line	Reference Line	No Curve			
geometry	member	29	1.3542	-6.1667	0.0000	Start	Reference Line	Reference Line	Circular Radius	15.0000		
path only	member	30-52										

TENDON Back Deck D8-R

Point Type	Reference Object Type	Reference Object or Range	Offset X (ft)	Offset Y (ft)	Offset Z (ft)	X Reference	Y Reference	Z Reference	Curvature Type			Width
geometry	member	53	0.9167	-6.1667	0.0000	End	Reference Line	Reference Line	Circular Radius	10.0000		
path only	member	54-55										
geometry	member	56	0.8333	-6.1667	-0.5729	Start	Reference Line	Reference Line	No Curve			

TENDON Back Deck D9-L

Point Type	Reference Object Type	Reference Object or Range	Offset X (ft)	Offset Y (ft)	Offset Z (ft)	X Reference	Y Reference	Z Reference	Curvature Type			Width
geometry	member	28	1.0000	7.6667	-0.1875	Start	Reference Line	Reference Line	No Curve			
geometry	member	29	1.3542	7.6667	0.0000	Start	Reference Line	Reference Line	Circular Radius	15.0000		
path only	member	30-52										
geometry	member	53	0.9167	7.6667	0.0000	End	Reference Line	Reference Line	Circular Radius	10.0000		
path only	member	54-55										
geometry	member	56	0.8333	7.6667	-0.5729	Start	Reference Line	Reference Line	No Curve			

TENDON Back Deck D9-R

Point Type	Reference Object Type	Reference Object or Range	Offset X (ft)	Offset Y (ft)	Offset Z (ft)	X Reference	Y Reference	Z Reference	Curvature Type			Width
geometry	member	28	1.0000	-7.6667	-0.1875	Start	Reference Line	Reference Line	No Curve			
geometry	member	29	1.3542	-7.6667	0.0000	Start	Reference Line	Reference Line	Circular Radius	15.0000		
path only	member	30-52										
geometry	member	53	0.9167	-7.6667	0.0000	End	Reference Line	Reference Line	Circular Radius	10.0000		
path only	member	54-55										
geometry	member	56	0.8333	-7.6667	-0.5729	Start	Reference Line	Reference Line	No Curve			

TENDON Back Canopy C5-L

Point Type	Reference Object Type	Reference Object or Range	Offset X (ft)	Offset Y (ft)	Offset Z (ft)	X Reference	Y Reference	Z Reference	Curvature Type			Width
geometry	member	131	1.0000	3.6250	0.2500	Start	Reference Line	Reference Line	No Curve			
geometry	member	132	0.3333	3.6250	-0.0104	Start	Reference Line	Reference Line	Circular Radius	10.0000		
path only	member	133-157										
geometry	member	157	1.8229	3.6250	-0.0104	End	Reference Line	Reference Line	No Curve			
path only	member	158										

TENDON Back Canopy C5-L

Point Type	Reference Object Type	Reference Object or Range	Offset X (ft)	Offset Y (ft)	Offset Z (ft)	X Reference	Y Reference	Z Reference	Curvature Type			Width
geometry	member	159	1.1458	2.4167	0.0938	Start	Reference Line	Reference Line	No Curve			
geometry	member	160	1.5000	2.4167	0.0938	End	Reference Line	Reference Line	Circular Radius	15.0000		
geometry	member	161	0.6667	2.4167	0.3646	End	Reference Line	Reference Line	No Curve			

TENDON Back Canopy C5-R

Point Type	Reference Object Type	Reference Object or Range	Offset X (ft)	Offset Y (ft)	Offset Z (ft)	X Reference	Y Reference	Z Reference	Curvature Type			Width
geometry	member	131	1.0000	-3.6250	0.2500	Start	Reference Line	Reference Line	No Curve			
geometry	member	132	0.3333	-3.6250	-0.0104	Start	Reference Line	Reference Line	Circular Radius	10.0000		
path only	member	133-157										
geometry	member	157	1.8229	-3.6250	-0.0104	End	Reference Line	Reference Line	No Curve			
path only	member	158										
geometry	member	159	1.1458	-2.4167	0.0938	Start	Reference Line	Reference Line	No Curve			
geometry	member	160	1.5000	-2.4167	0.0938	End	Reference Line	Reference Line	Circular Radius	15.0000		
geometry	member	161	0.6667	-2.4167	0.3646	End	Reference Line	Reference Line	No Curve			

TENDON Full Length - Canopy C4-L

Point Type	Reference Object Type	Reference Object or Range	Offset X (ft)	Offset Y (ft)	Offset Z (ft)	X Reference	Y Reference	Z Reference	Curvature Type			Width
geometry	member	162	0.6667	4.9167	0.5208	Start	Reference Line	Reference Line	No Curve			
geometry	member	101	1.5000	4.9167	0.2500	Start	Reference Line	Reference Line	Circular Radius	15.0000		
geometry	member	102	7.0000	4.9167	0.2500	Start	Reference Line	Reference Line	No Curve			
geometry	member	103	2.1458	5.6667	0.1250	Start	Reference Line	Reference Line	No Curve			
path only	member	104-156										
geometry	member	157	1.8229	5.6667	0.1250	Start	Reference Line	Reference Line	No Curve			
path only	member	158										
geometry	member	159	1.1458	4.9167	0.2500	Start	Reference Line	Reference Line	No Curve			
geometry	member	160	1.5000	4.9167	0.2500	End	Reference Line	Reference Line	Circular Radius	15.0000		
geometry	member	161	0.6667	4.9167	0.5208	End	Reference Line	Reference Line	No Curve			

TENDON Full Length - Canopy C4-R

Point Type	Reference Object Type	Reference Object or Range	Offset X (ft)	Offset Y (ft)	Offset Z (ft)	X Reference	Y Reference	Z Reference	Curvature Type			Width
geometry	member	162	0.6667	-4.9167	0.5208	Start	Reference Line	Reference Line	No Curve			
geometry	member	101	1.5000	-4.9167	0.2500	Start	Reference Line	Reference Line	Circular Radius	15.0000		
geometry	member	102	7.0000	-4.9167	0.2500	Start	Reference Line	Reference Line	No Curve			
geometry	member	103	2.1458	-5.6667	0.1250	Start	Reference Line	Reference Line	No Curve			
path only	member	104-156										
geometry	member	157	1.8229	-5.6667	0.1250	Start	Reference Line	Reference Line	No Curve			
path only	member	158										
geometry	member	159	1.1458	-4.9167	0.2500	Start	Reference Line	Reference Line	No Curve			
geometry	member	160	1.5000	-4.9167	0.2500	End	Reference Line	Reference Line	Circular Radius	15.0000		
geometry	member	161	0.6667	-4.9167	0.5208	End	Reference Line	Reference Line	No Curve			

TENDON Full Length - Canopy C1-L

Point Type	Reference Object Type	Reference Object or Range	Offset X (ft)	Offset Y (ft)	Offset Z (ft)	X Reference	Y Reference	Z Reference	Curvature Type			Width
geometry	member	162	0.6667	1.1667	0.6042	Start	Reference Line	Reference Line	No Curve			
geometry	member	101	1.5000	1.1667	0.3438	Start	Reference Line	Reference Line	Circular Radius	15.0000		
geometry	member	102	7.0000	1.1667	0.3438	Start	Reference Line	Reference Line	No Curve			
geometry	member	103	2.1458	2.7500	0.2083	Start	Reference Line	Reference Line	No Curve			
path only	member	104-156										
geometry	member	157	1.8229	2.7500	0.2083	Start	Reference Line	Reference Line	No Curve			
path only	member	158										
geometry	member	159	1.1458	1.1667	0.3438	Start	Reference Line	Reference Line	No Curve			
geometry	member	160	1.5000	1.1667	0.3438	End	Reference Line	Reference Line	Circular Radius	15.0000		
geometry	member	161	0.6667	1.1667	0.6042	End	Reference Line	Reference Line	No Curve			

TENDON Full Length - Canopy C1-R

Point Type	Reference Object Type	Reference Object or Range	Offset X (ft)	Offset Y (ft)	Offset Z (ft)	X Reference	Y Reference	Z Reference	Curvature Type			Width
geometry	member	162	0.6667	-1.1667	0.6042	Start	Reference Line	Reference Line	No Curve			
geometry	member	101	1.5000	-1.1667	0.3438	Start	Reference Line	Reference Line	Circular Radius	15.0000		
geometry	member	102	7.0000	-1.1667	0.3438	Start	Reference Line	Reference Line	No Curve			

TENDON Full Length - Canopy C1-R

Point Type	Reference Object Type	Reference Object or Range	Offset X (ft)	Offset Y (ft)	Offset Z (ft)	X Reference	Y Reference	Z Reference	Curvature Type			Width
geometry	member	103	2.1458	-2.7500	0.2083	Start	Reference Line	Reference Line	No Curve			
path only	member	104-156										
geometry	member	157	1.8229	-2.7500	0.2083	Start	Reference Line	Reference Line	No Curve			
path only	member	158										
geometry	member	159	1.1458	-1.1667	0.3438	Start	Reference Line	Reference Line	No Curve			
geometry	member	160	1.5000	-1.1667	0.3438	End	Reference Line	Reference Line	Circular Radius	15.0000		
geometry	member	161	0.6667	-1.1667	0.6042	End	Reference Line	Reference Line	No Curve			

TENDON Main Deck D1-L, Graph

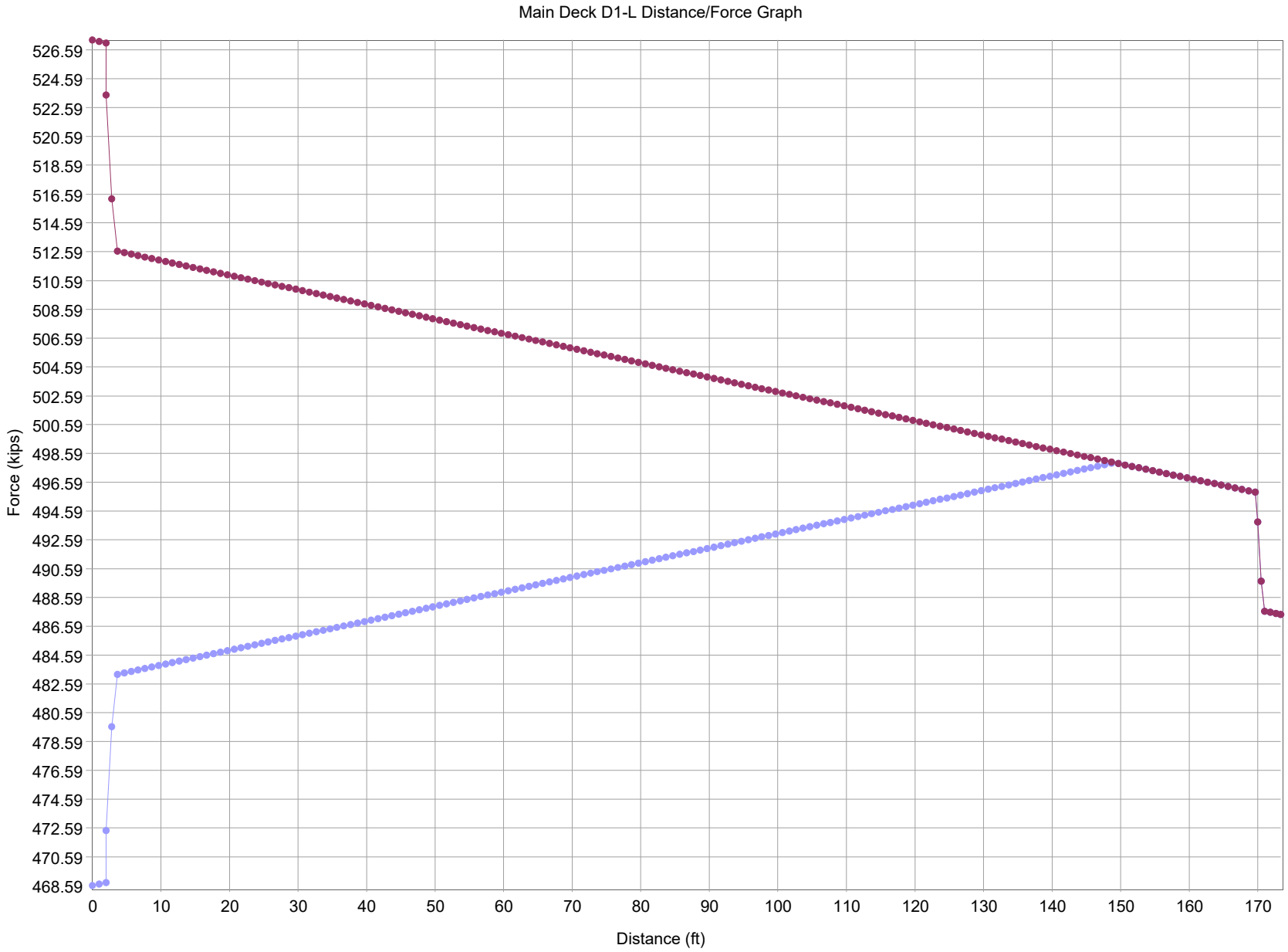

TENDON Main Deck D1-R, Graph

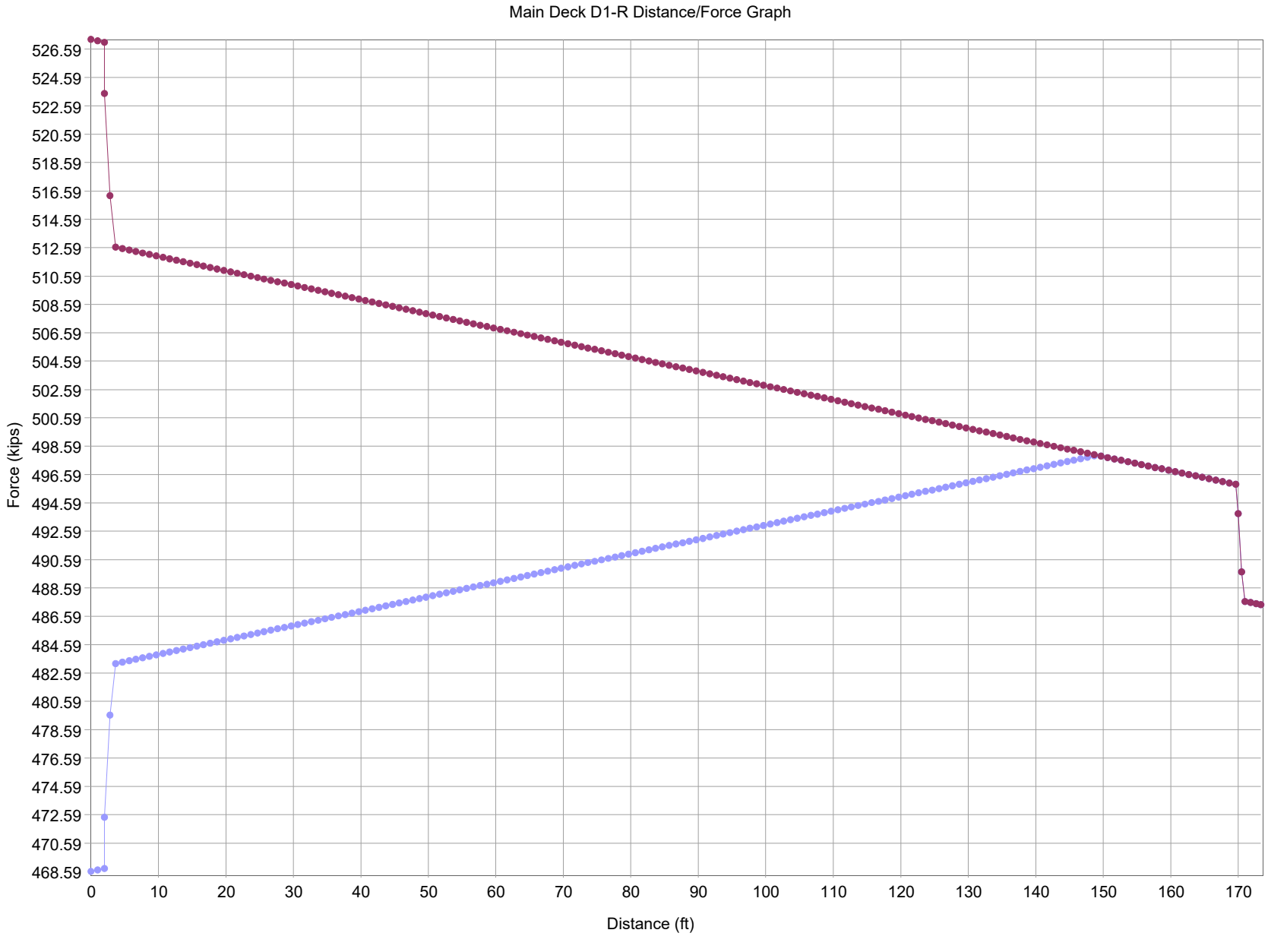

TENDON Main Deck D2-L, Graph

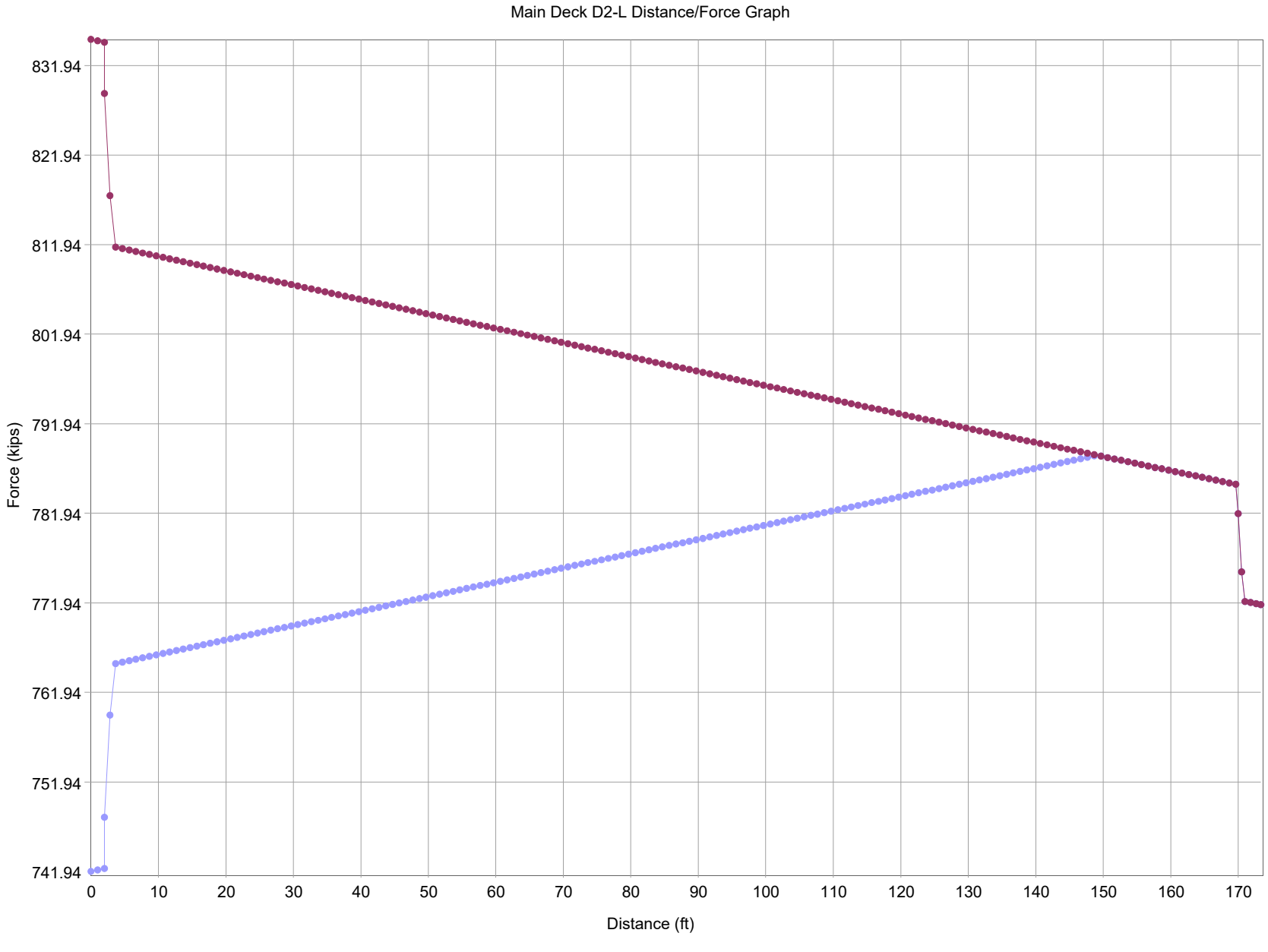

TENDON Main Deck D2-R, Graph

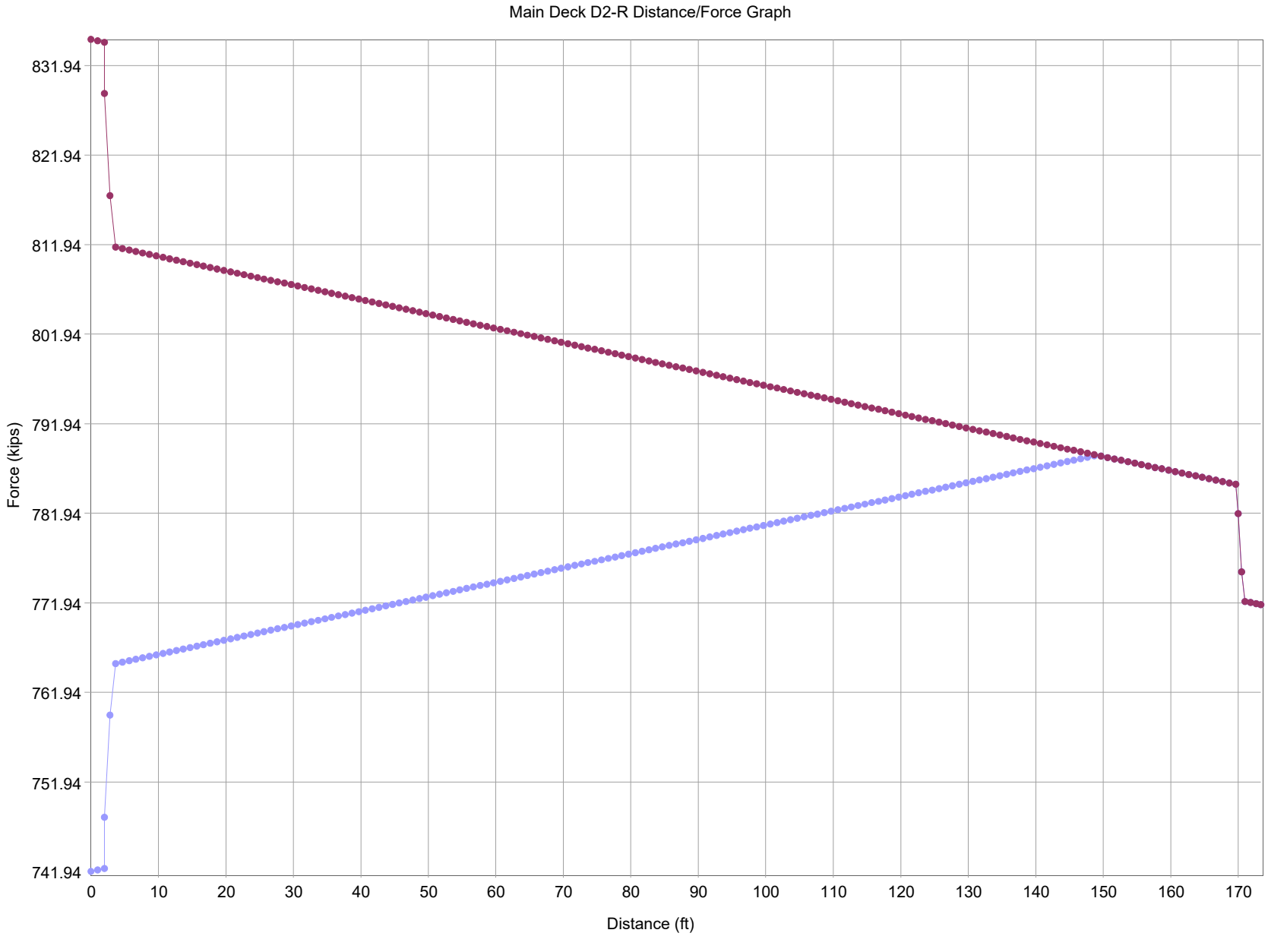

TENDON Main Deck D3-L, Graph

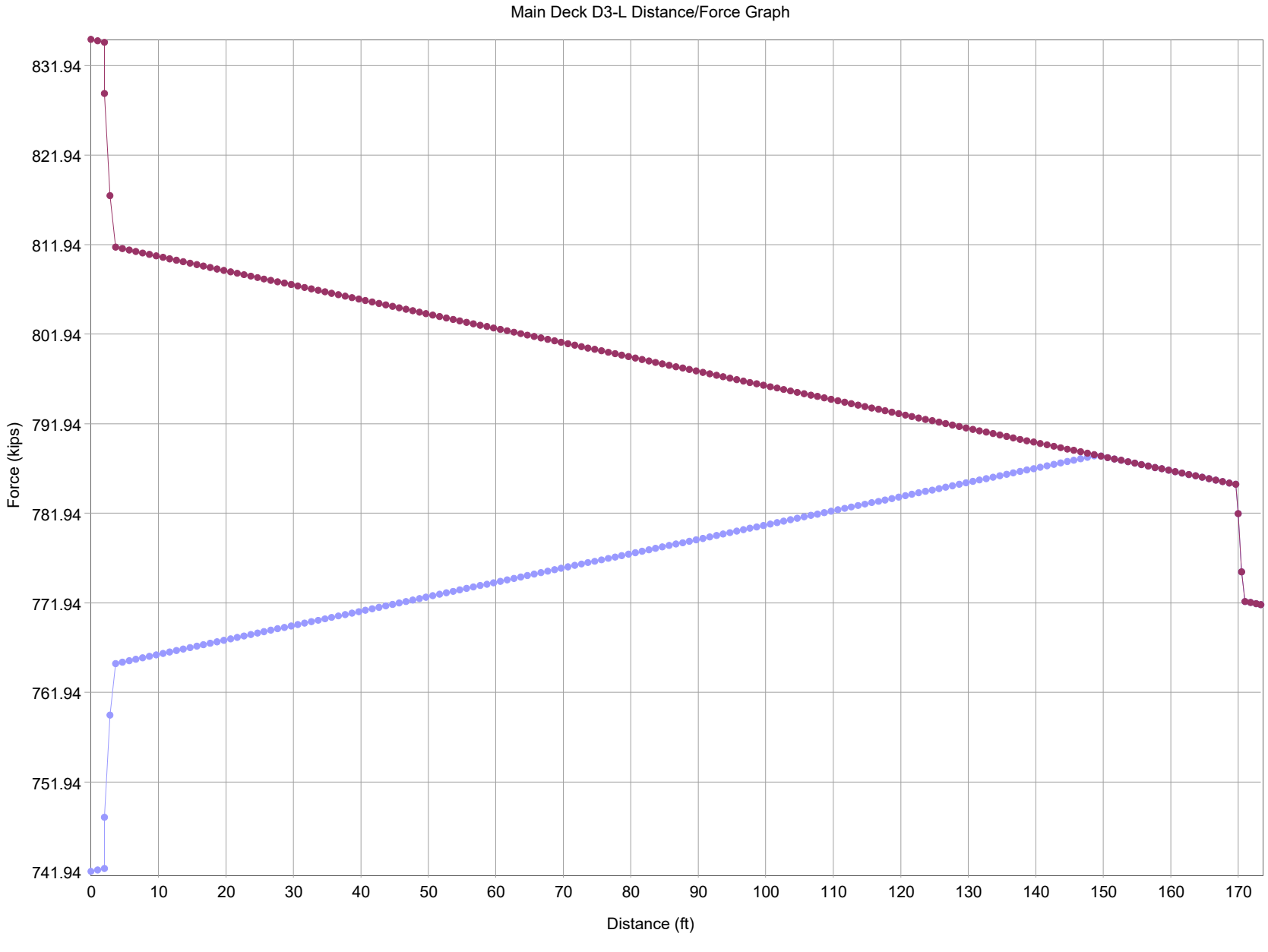

TENDON Main Deck D3-R, Graph

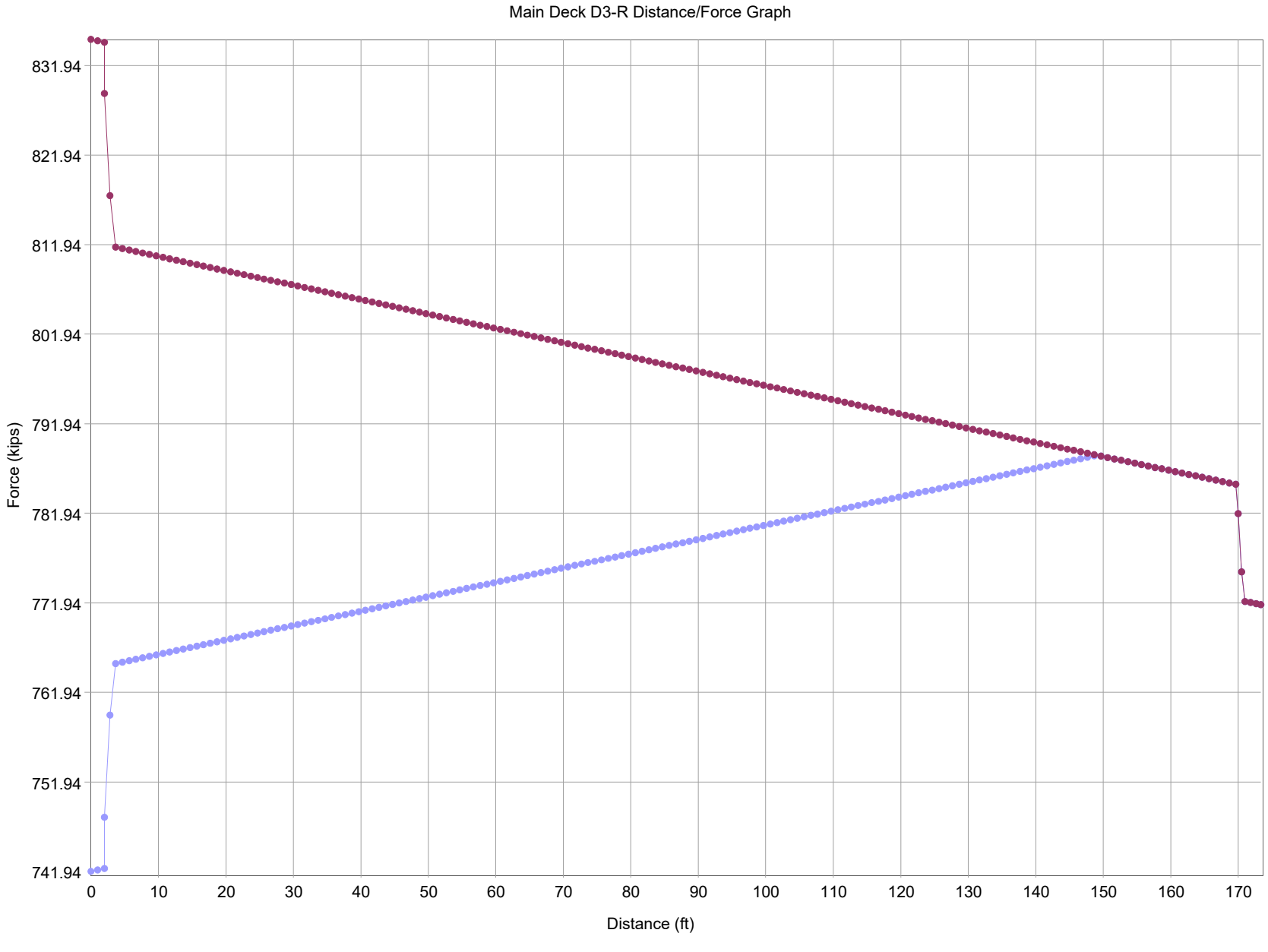

TENDON Main Deck D4-L, Graph

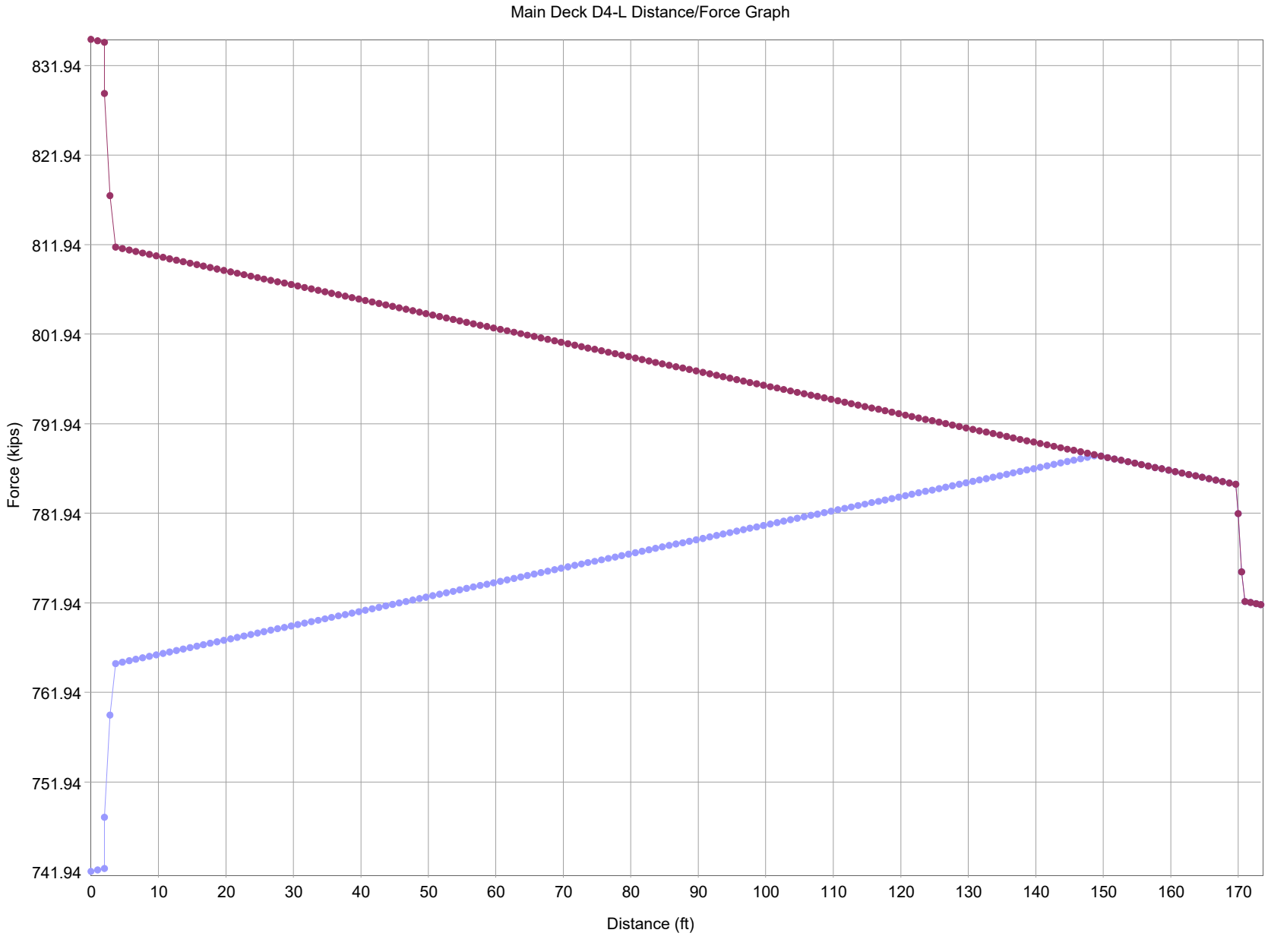

TENDON Main Deck D4-R, Graph

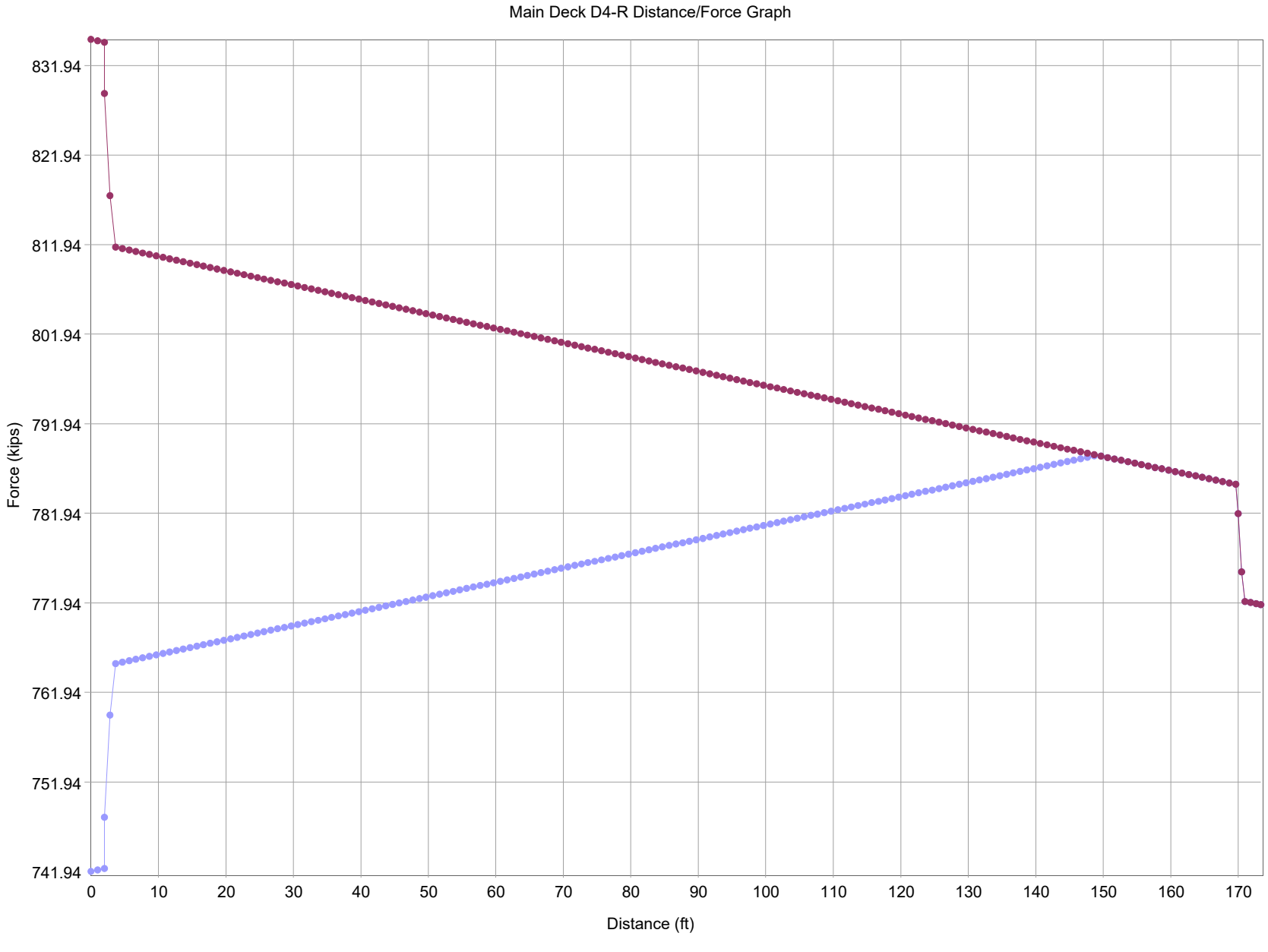

TENDON Main Deck D5-L, Graph

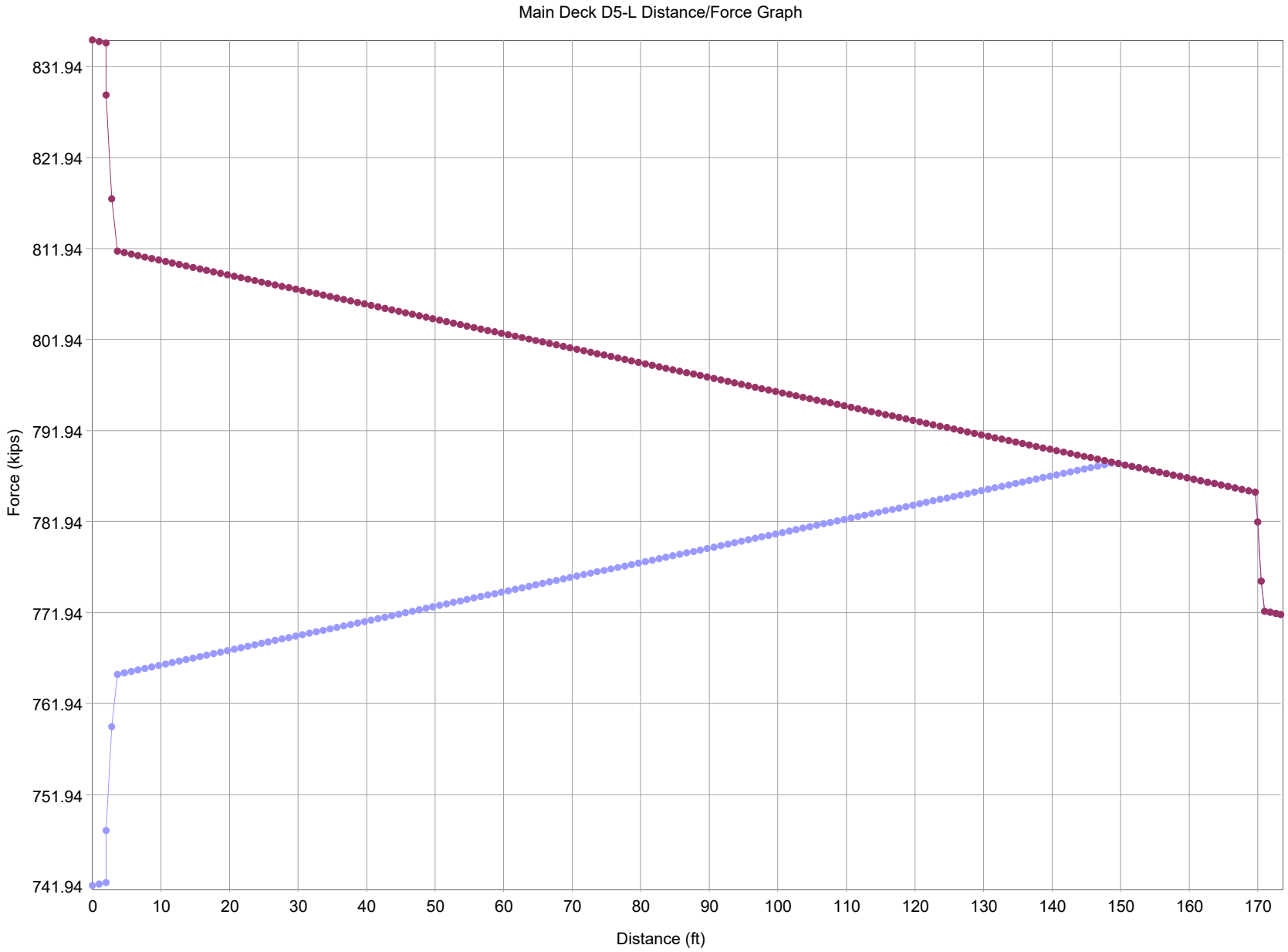

TENDON Main Deck D5-R, Graph

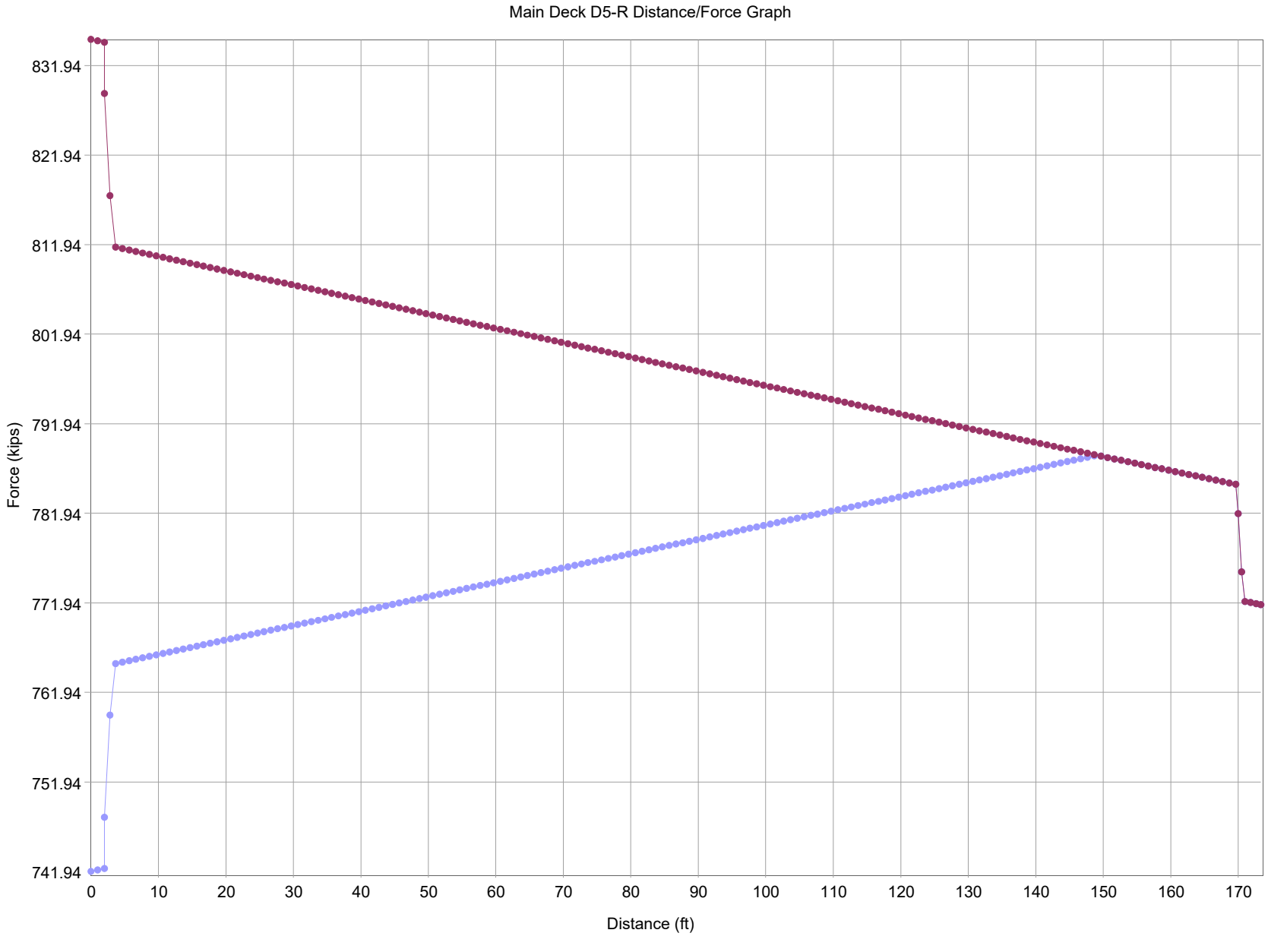

TENDON Main Deck D6-L, Graph

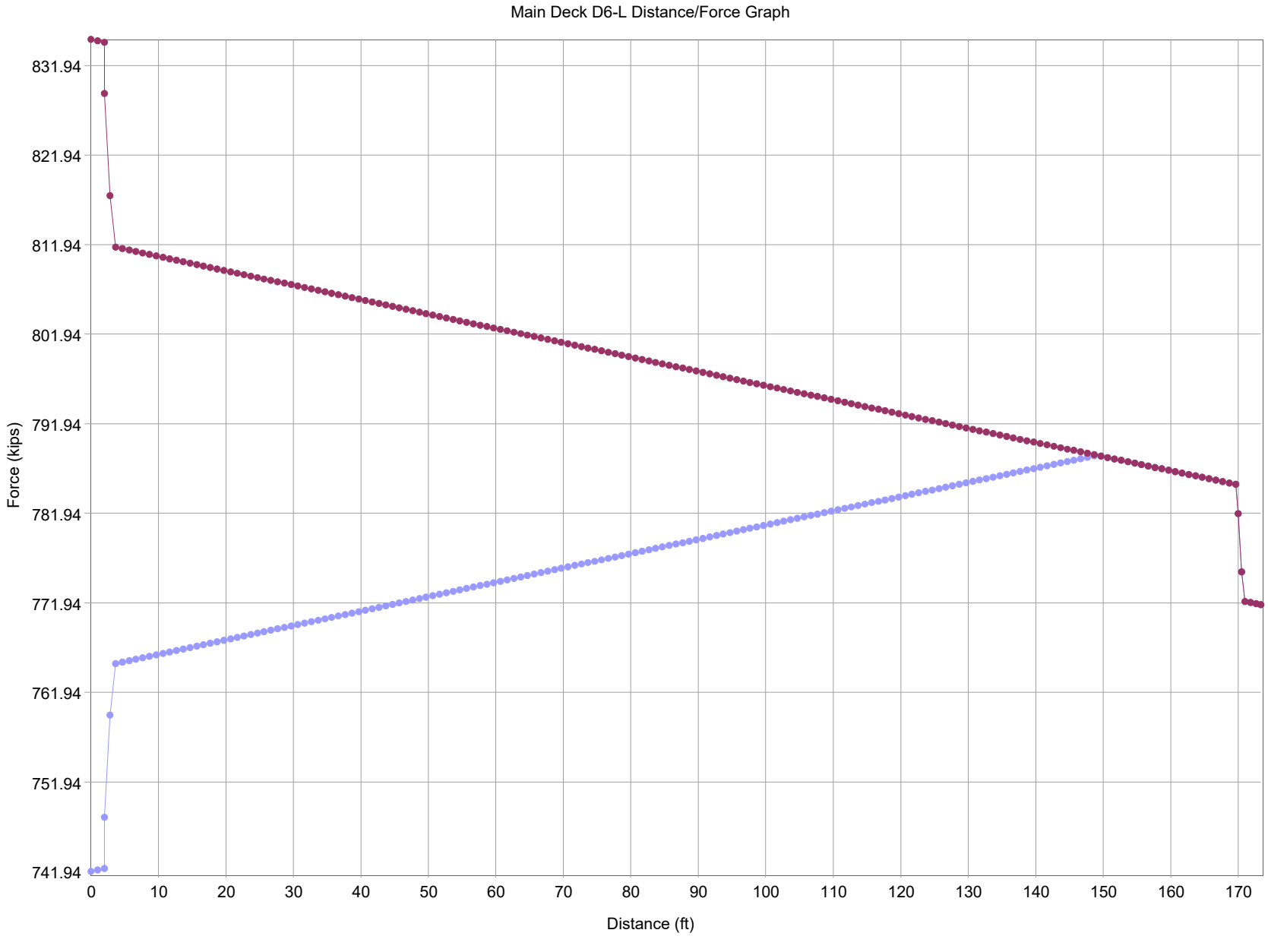

TENDON Main Deck D6-R, Graph

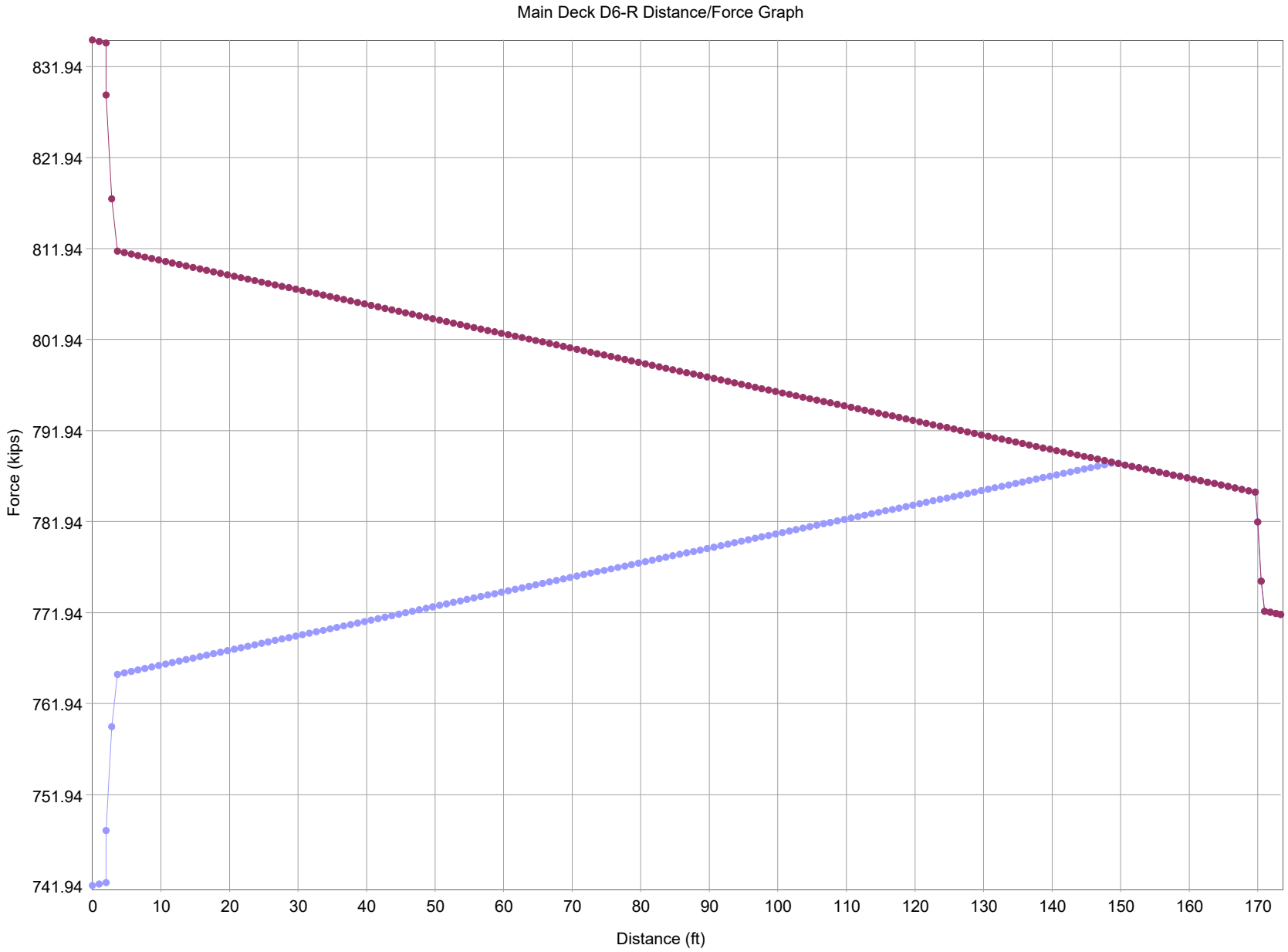

TENDON Main Canopy C2-L, Graph

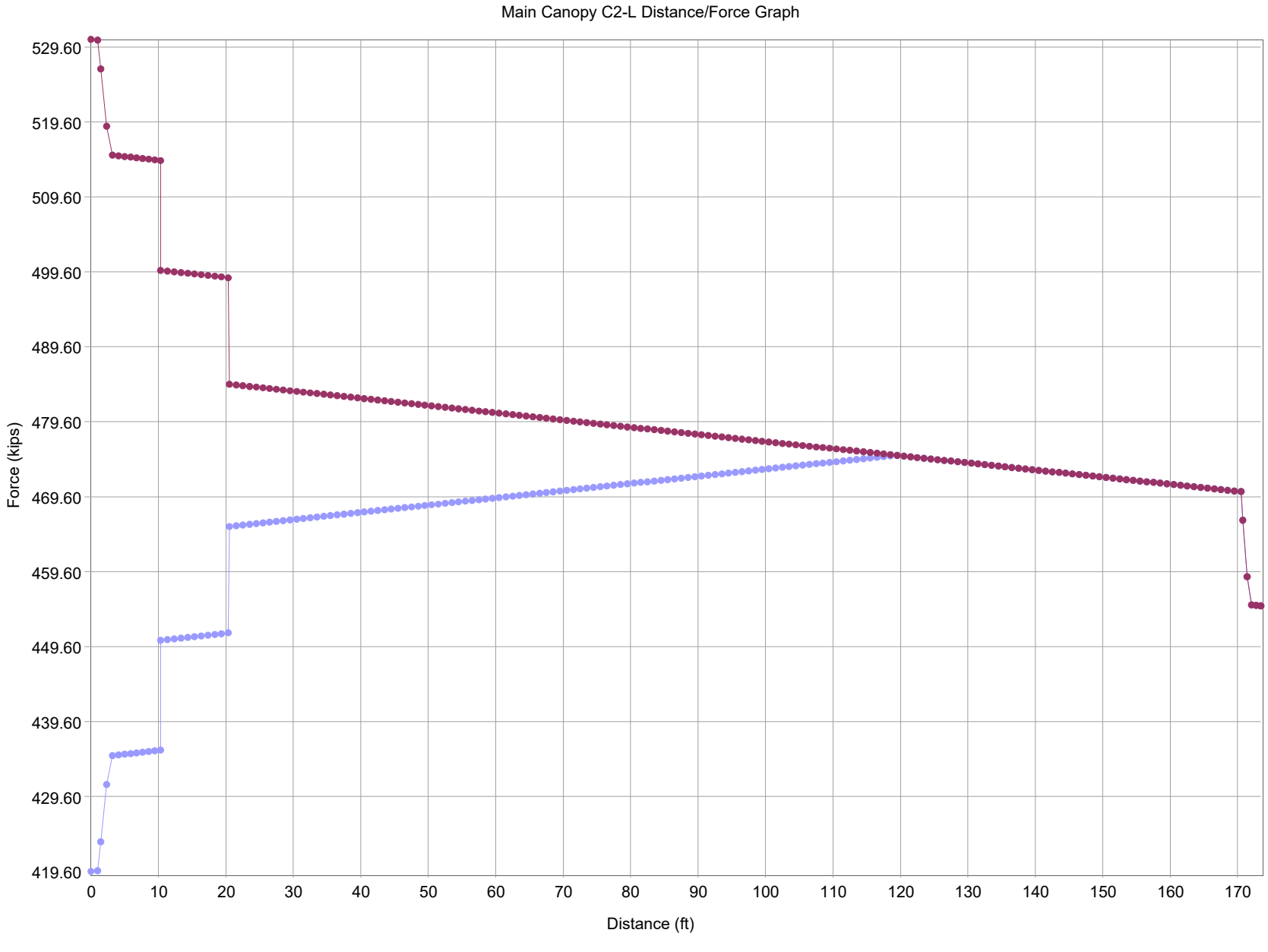

TENDON Main Canopy C2-R, Graph

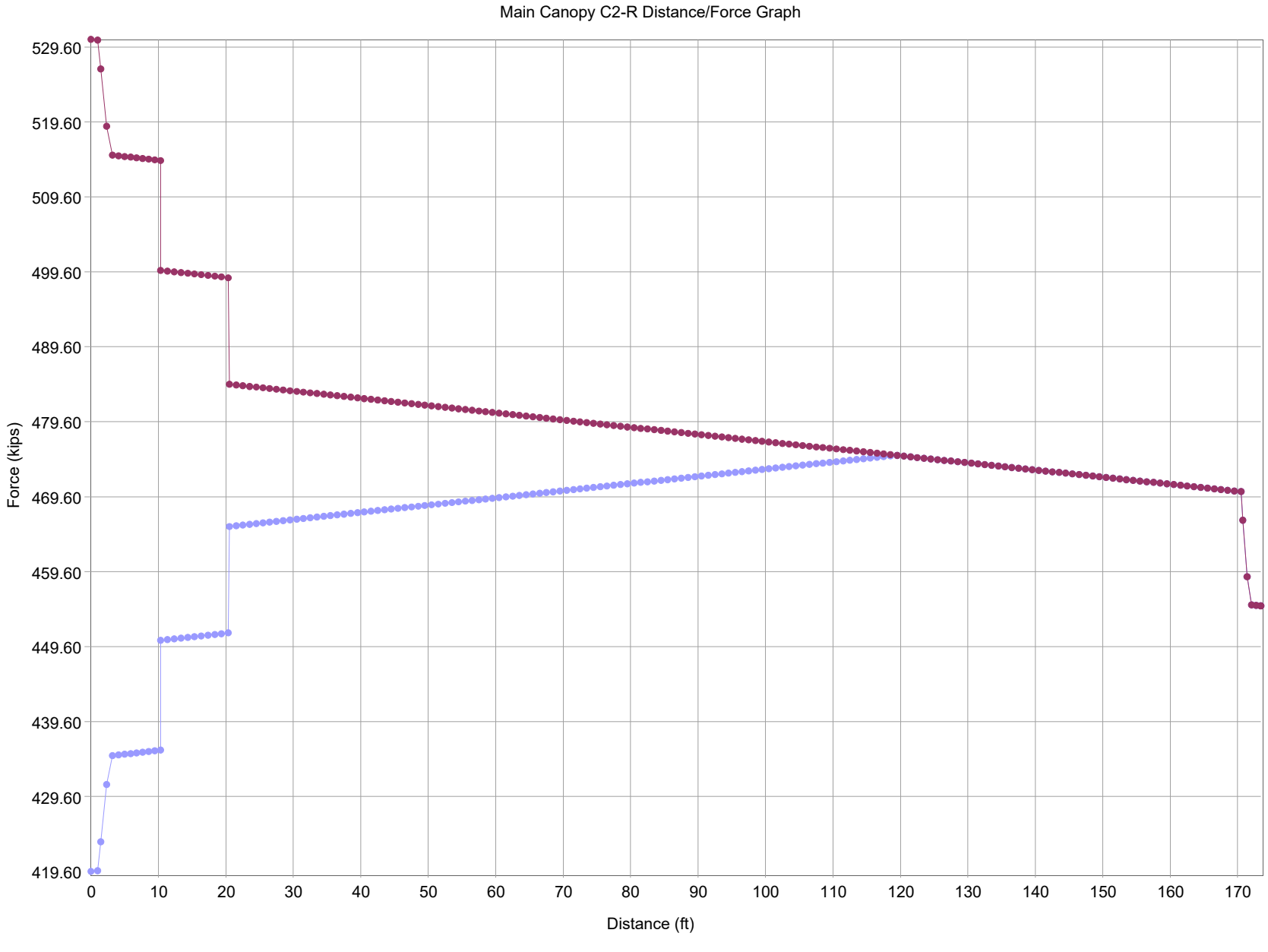

TENDON Main Canopy C3-L, Graph

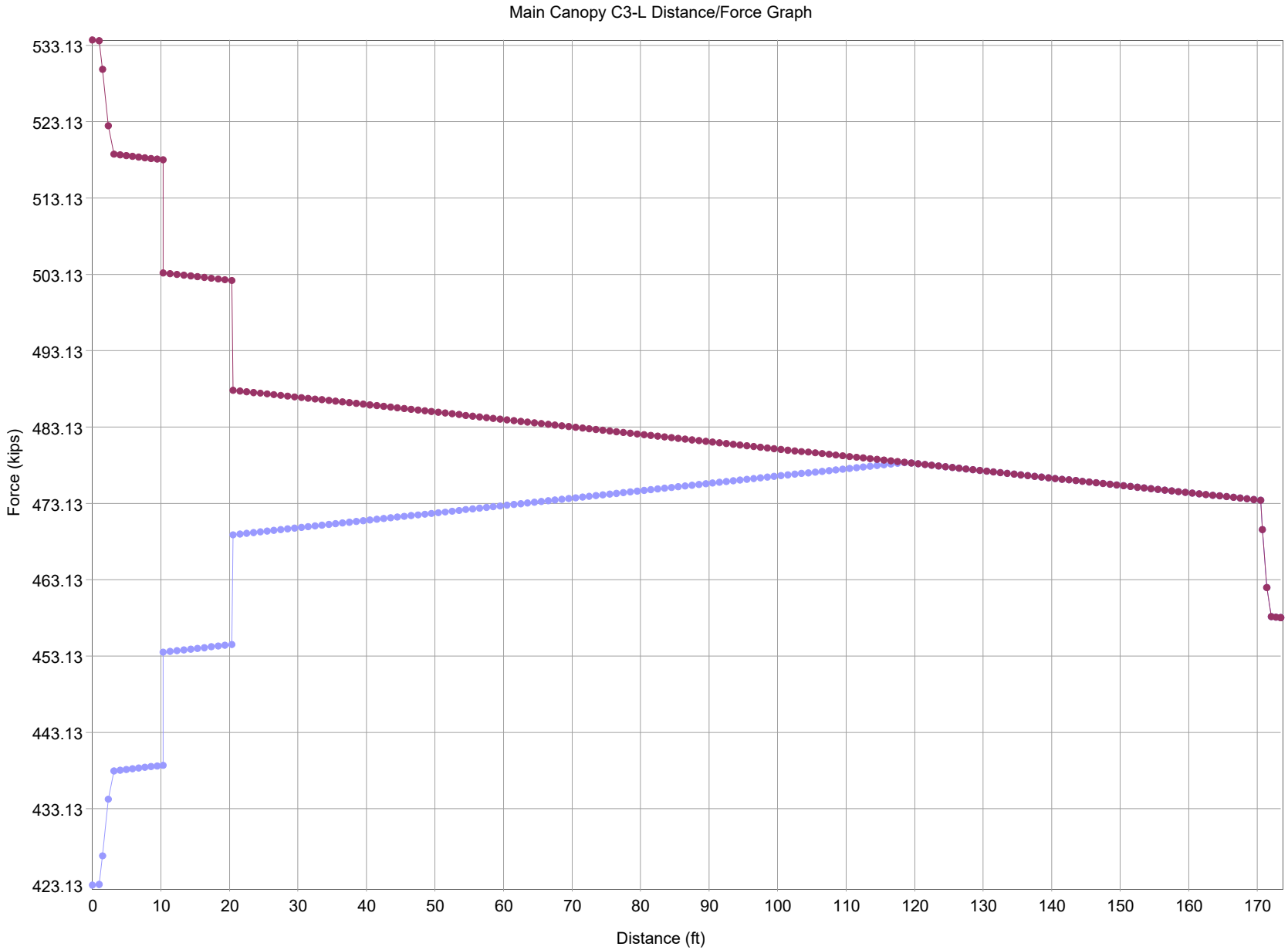

TENDON Main Canopy C3-R, Graph

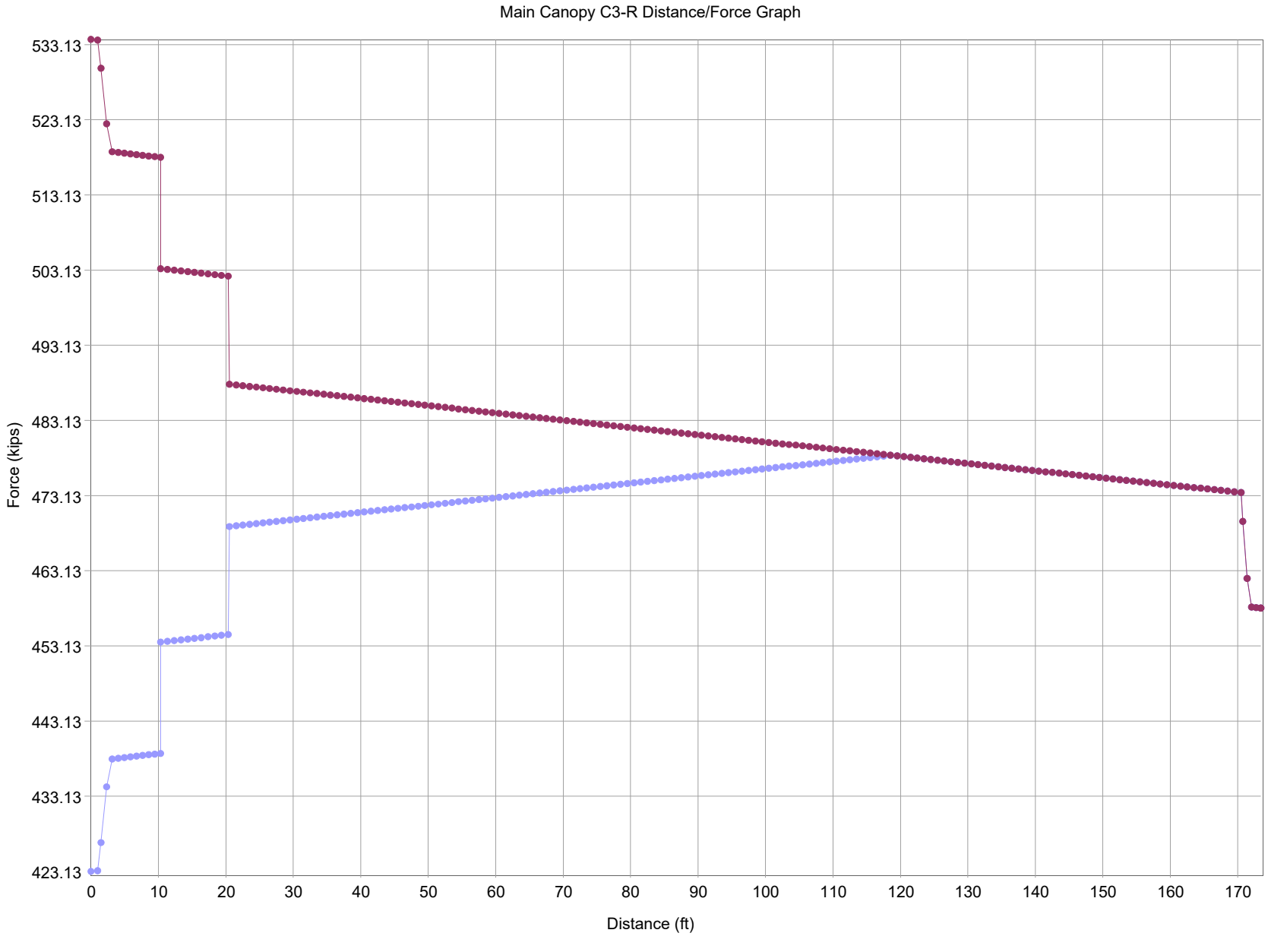

TENDON Back Deck D7-L, Graph

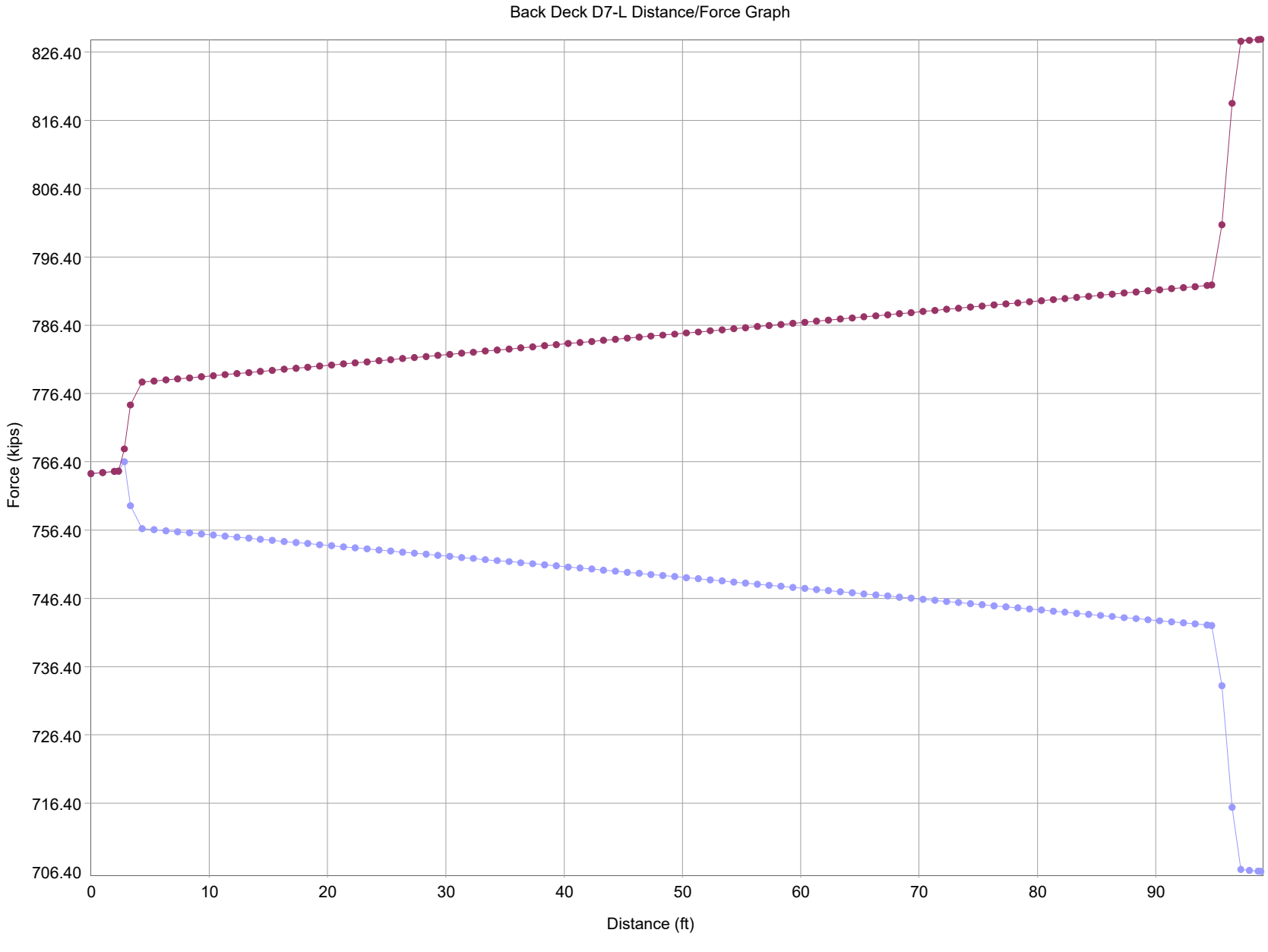

TENDON Back Deck D7-R, Graph

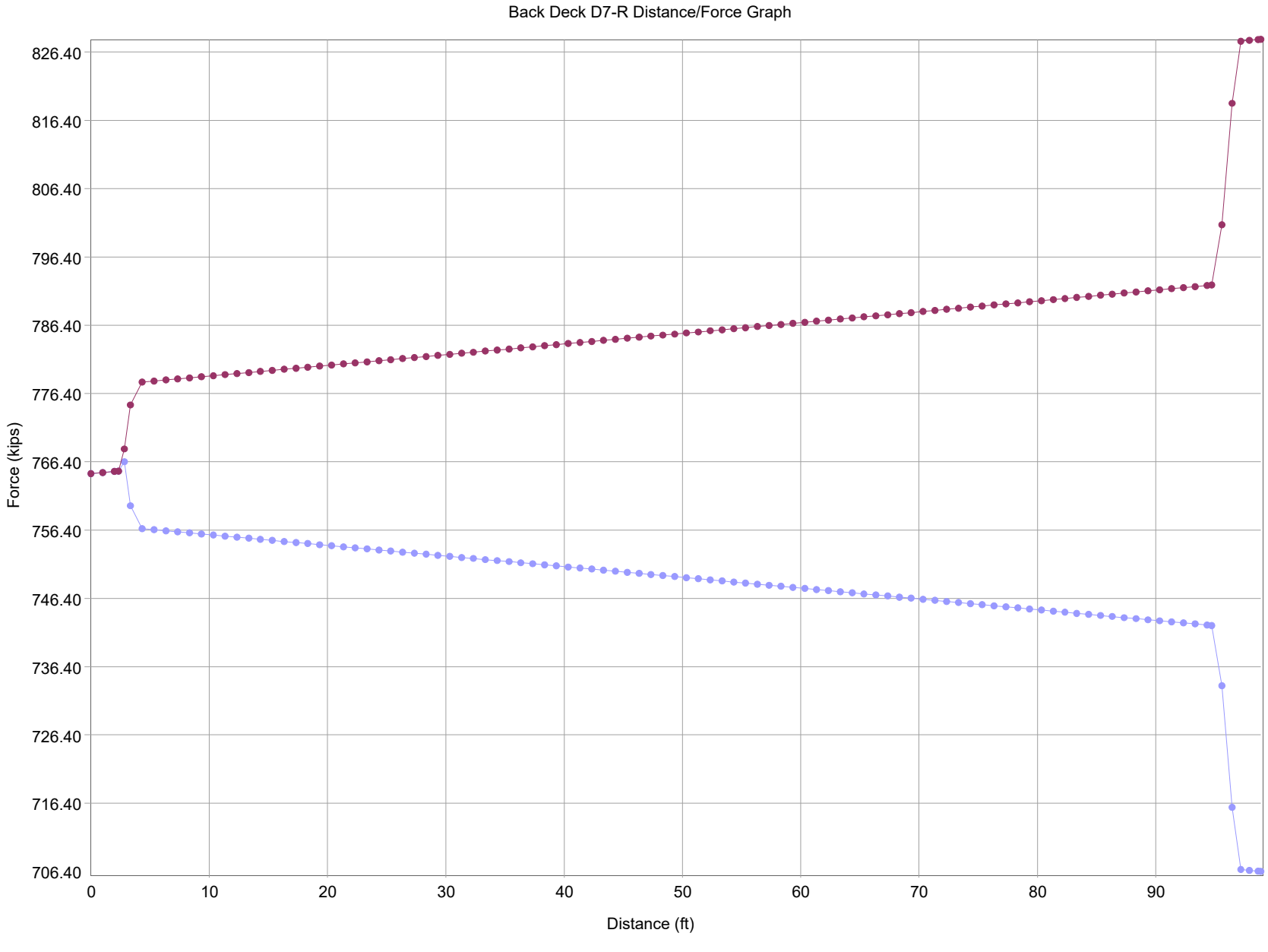

TENDON Back Deck D8-L, Graph

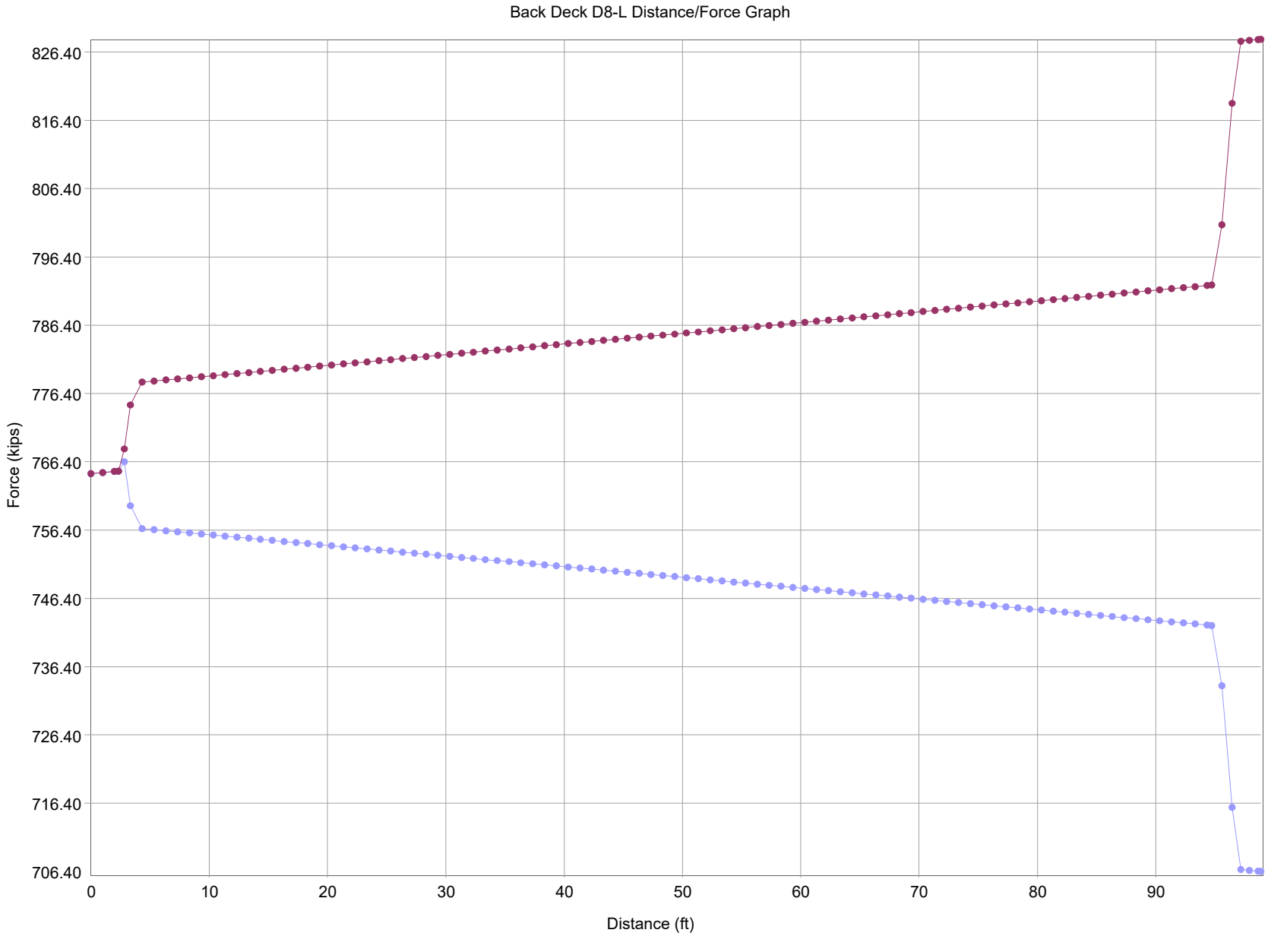

TENDON Back Deck D8-R, Graph

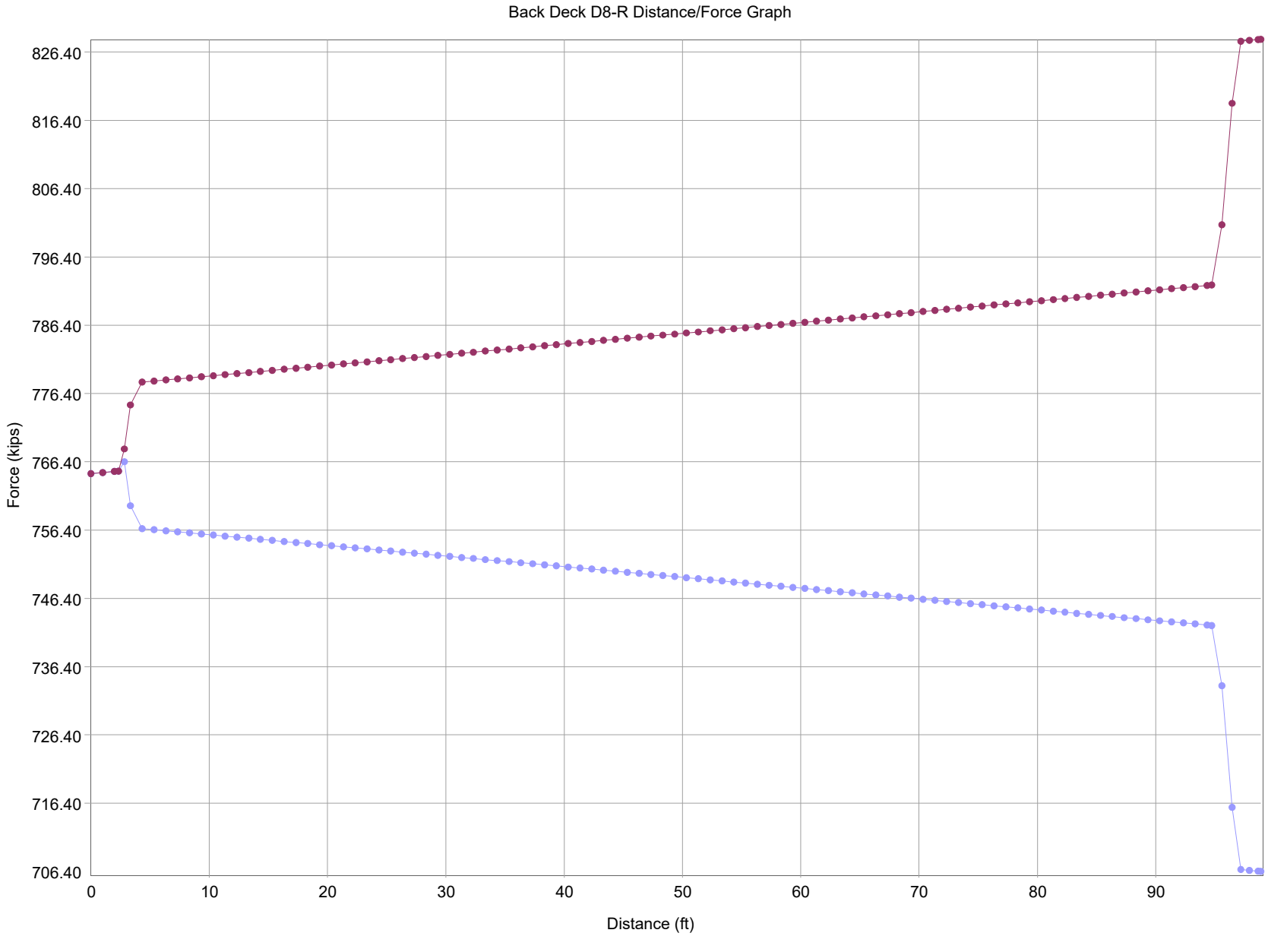

TENDON Back Deck D9-L, Graph

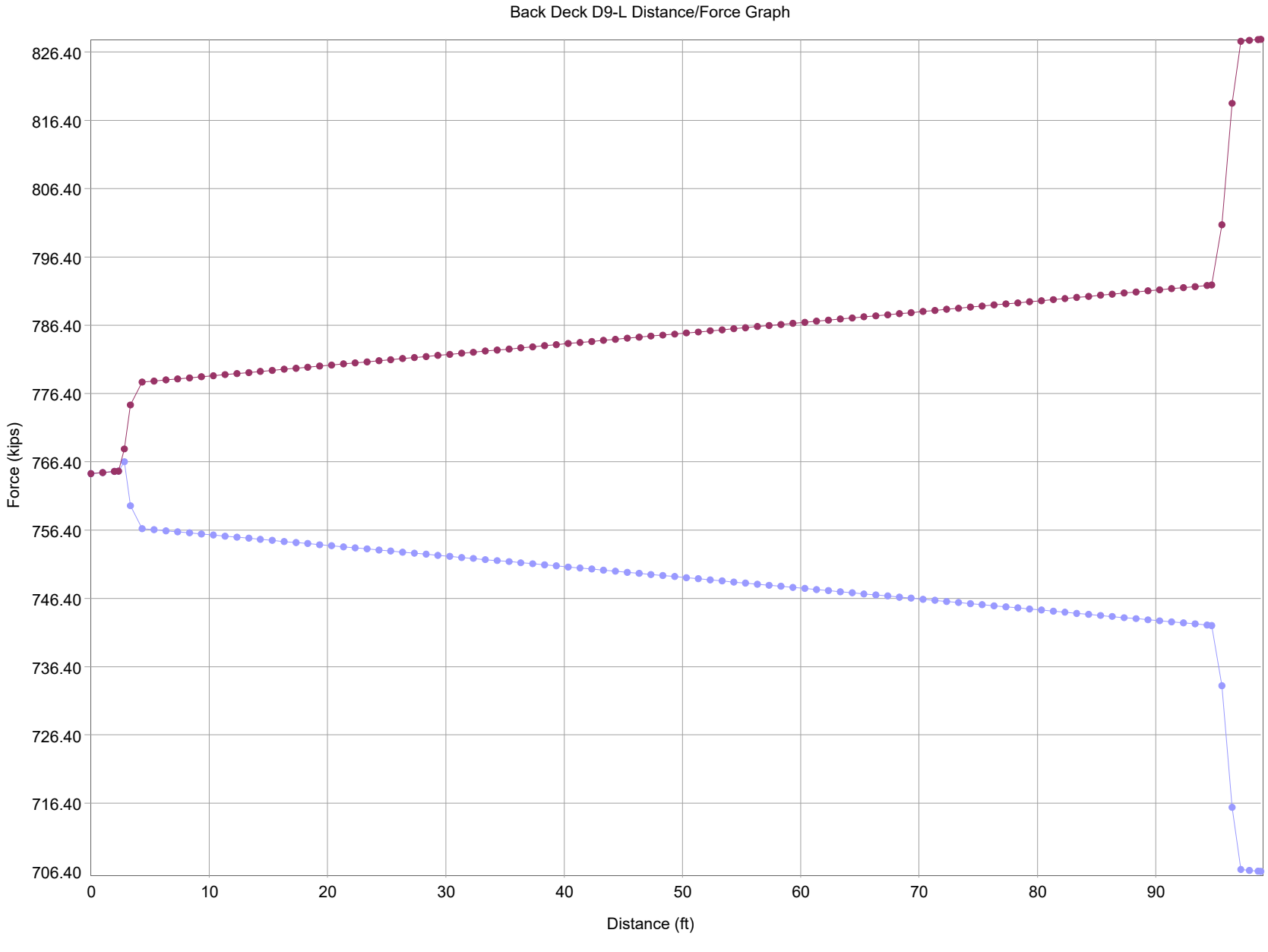

TENDON Back Deck D9-R, Graph

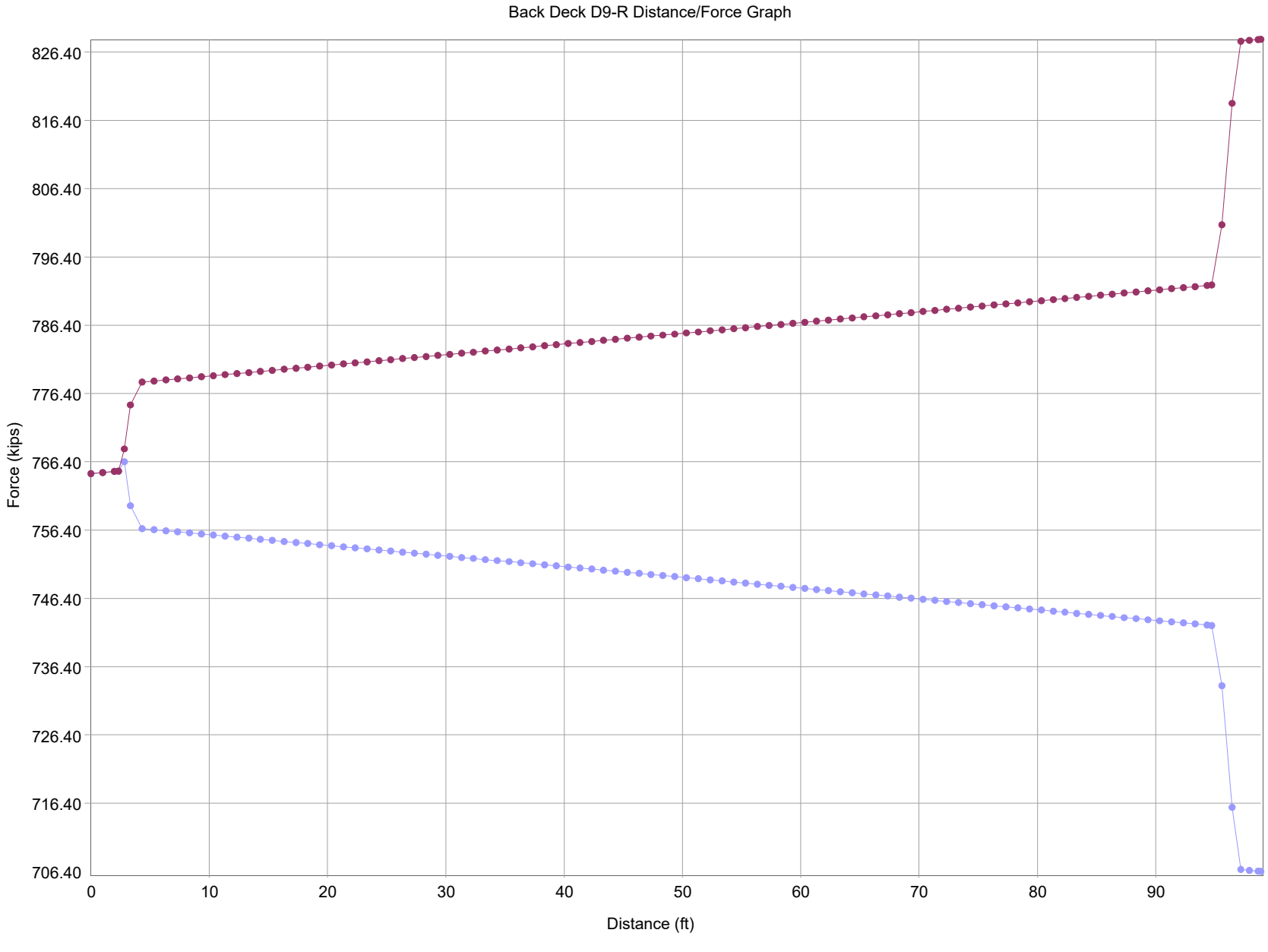

TENDON Back Canopy C5-L, Graph

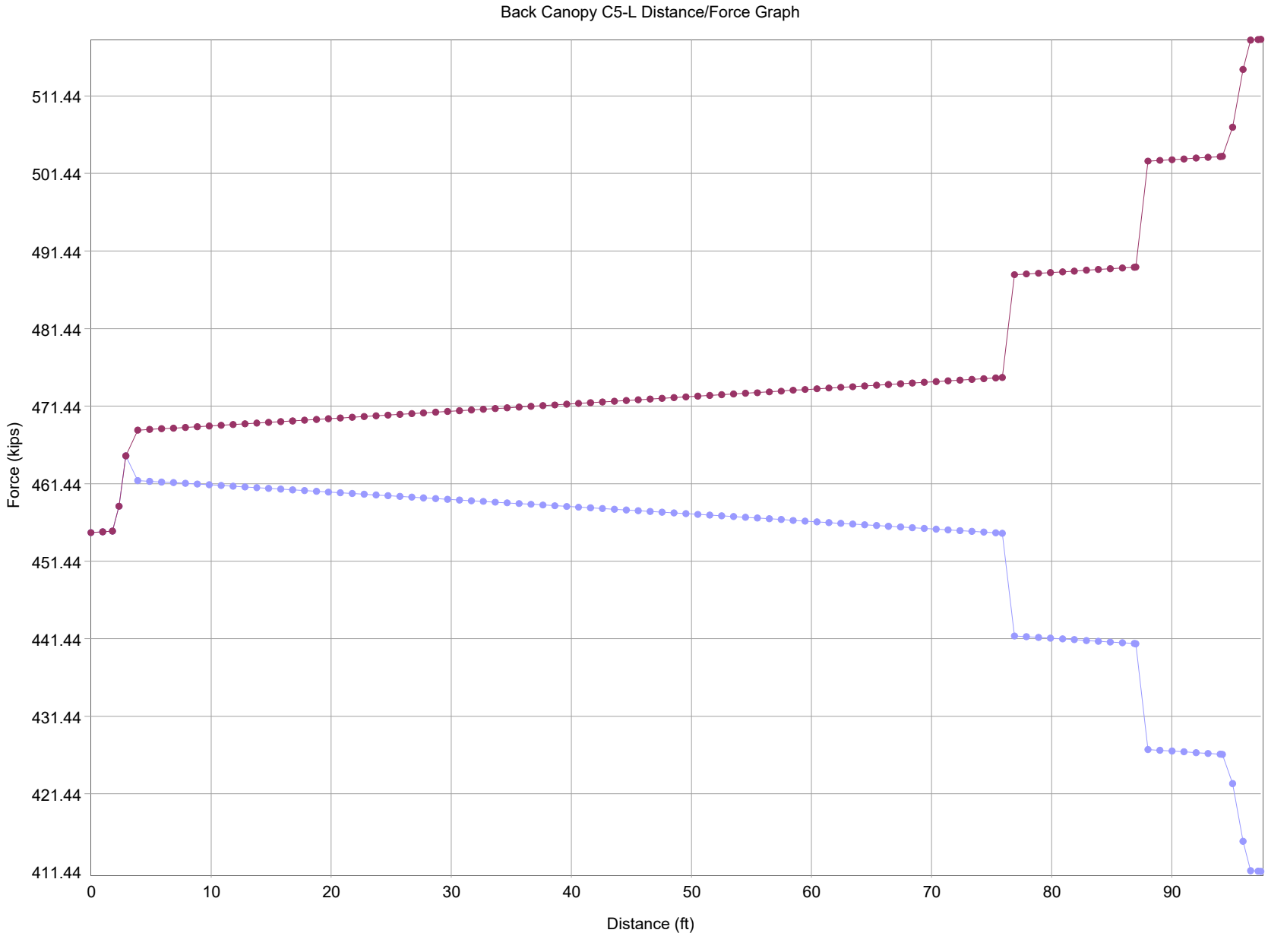

TENDON Back Canopy C5-R, Graph

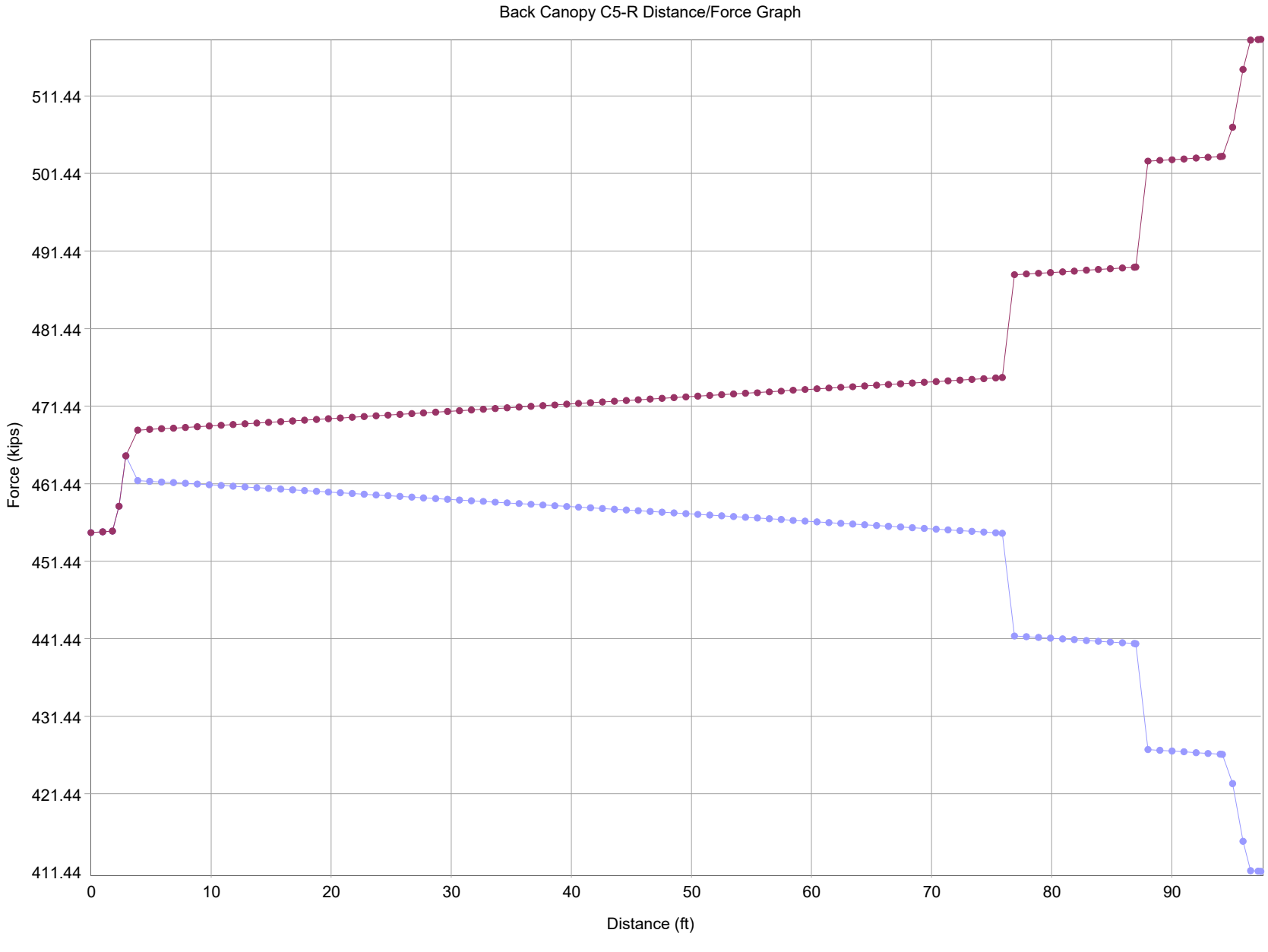

TENDON Full Length - Canopy C4-L, Graph

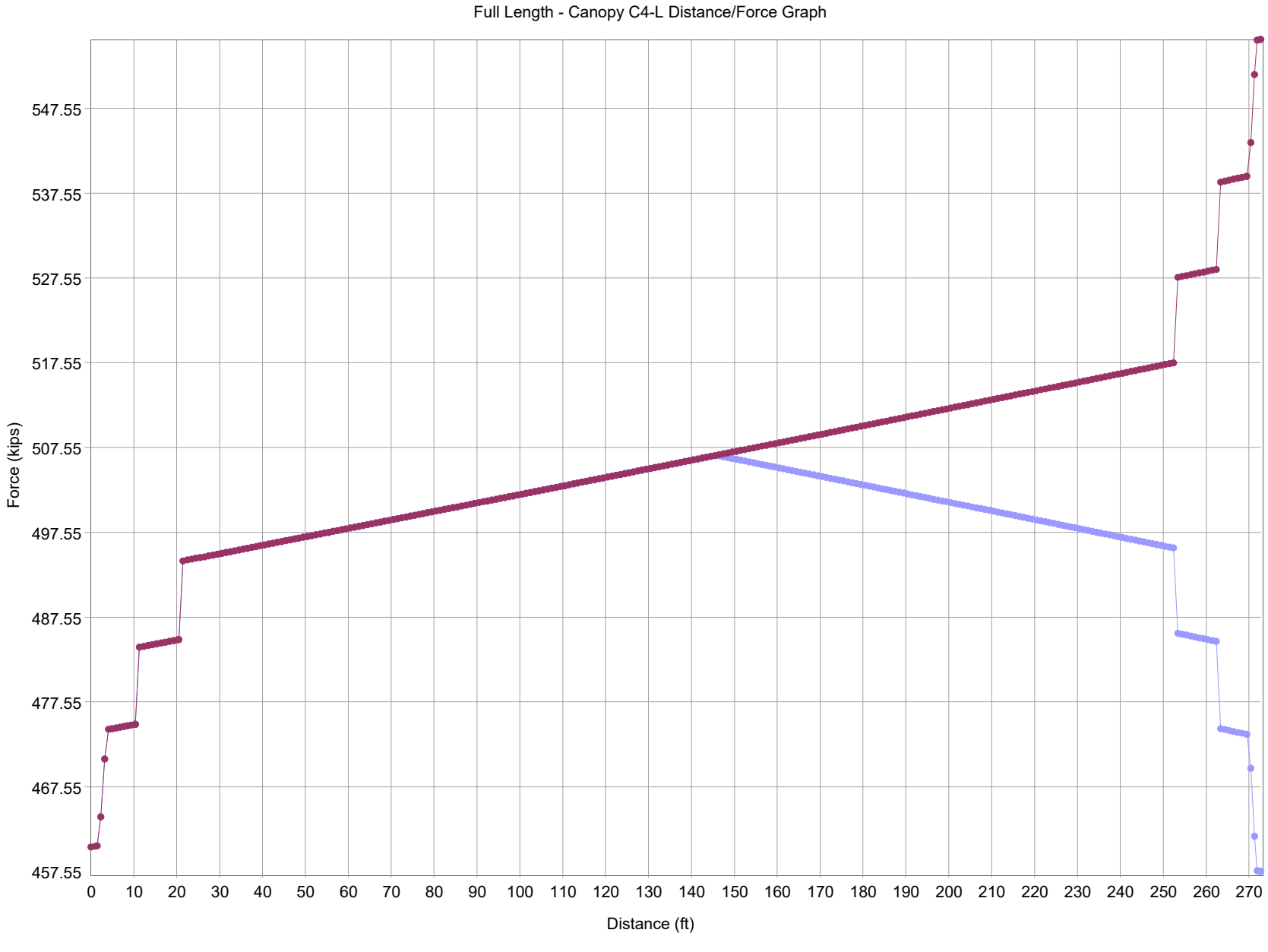

TENDON Full Length - Canopy C4-R, Graph

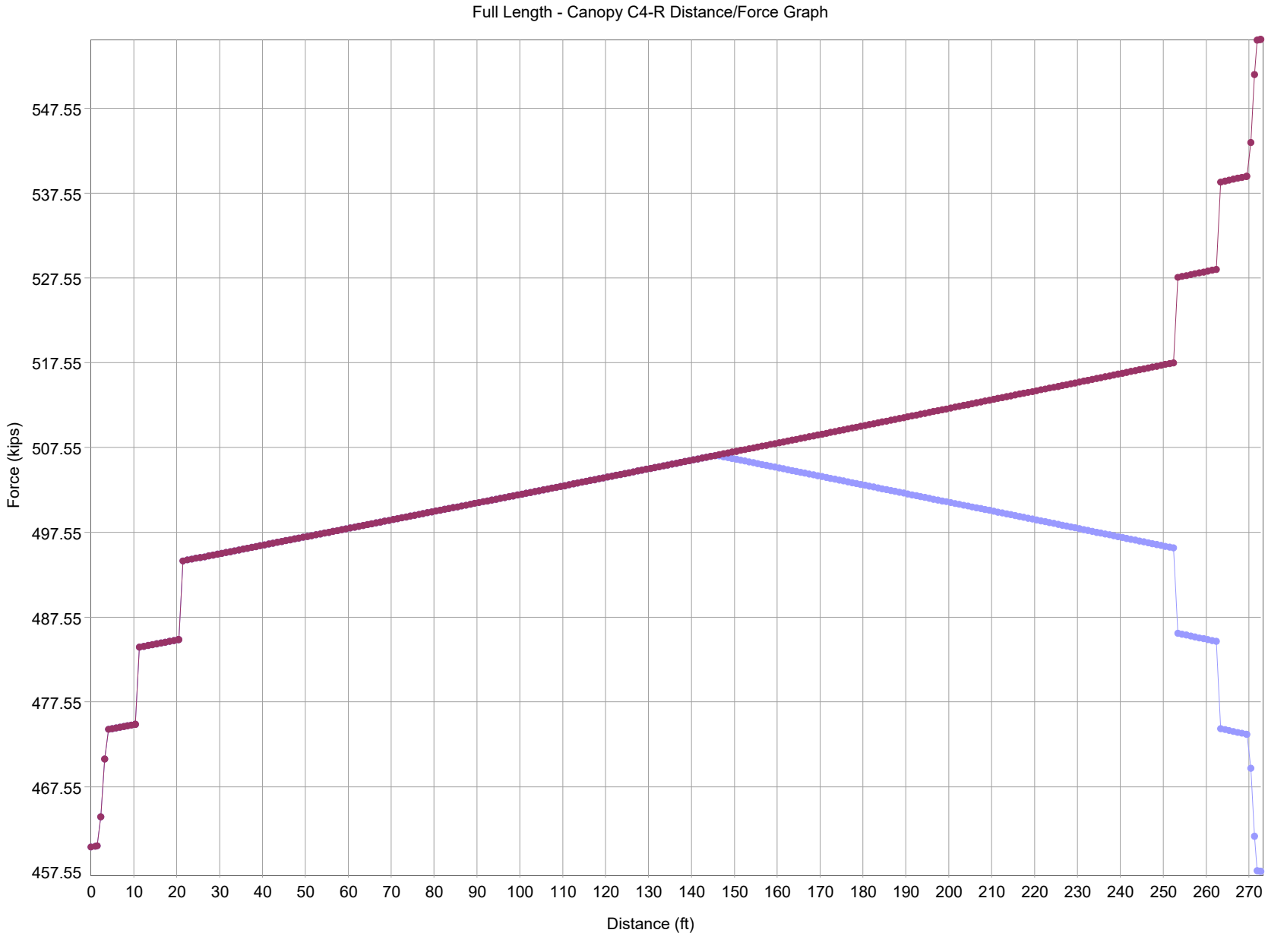

TENDON Full Length - Canopy C1-L, Graph

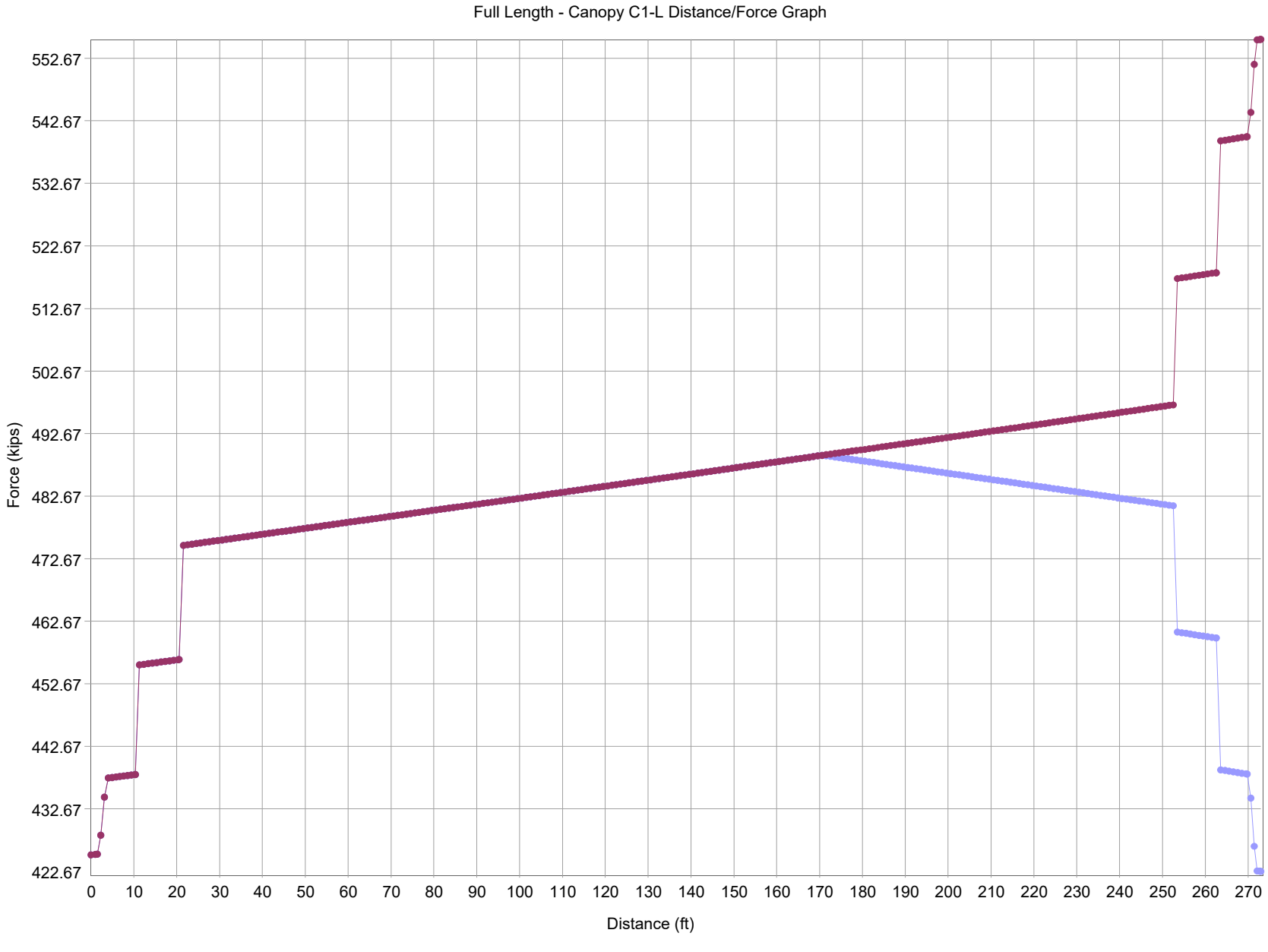

TENDON Full Length - Canopy C1-R, Graph

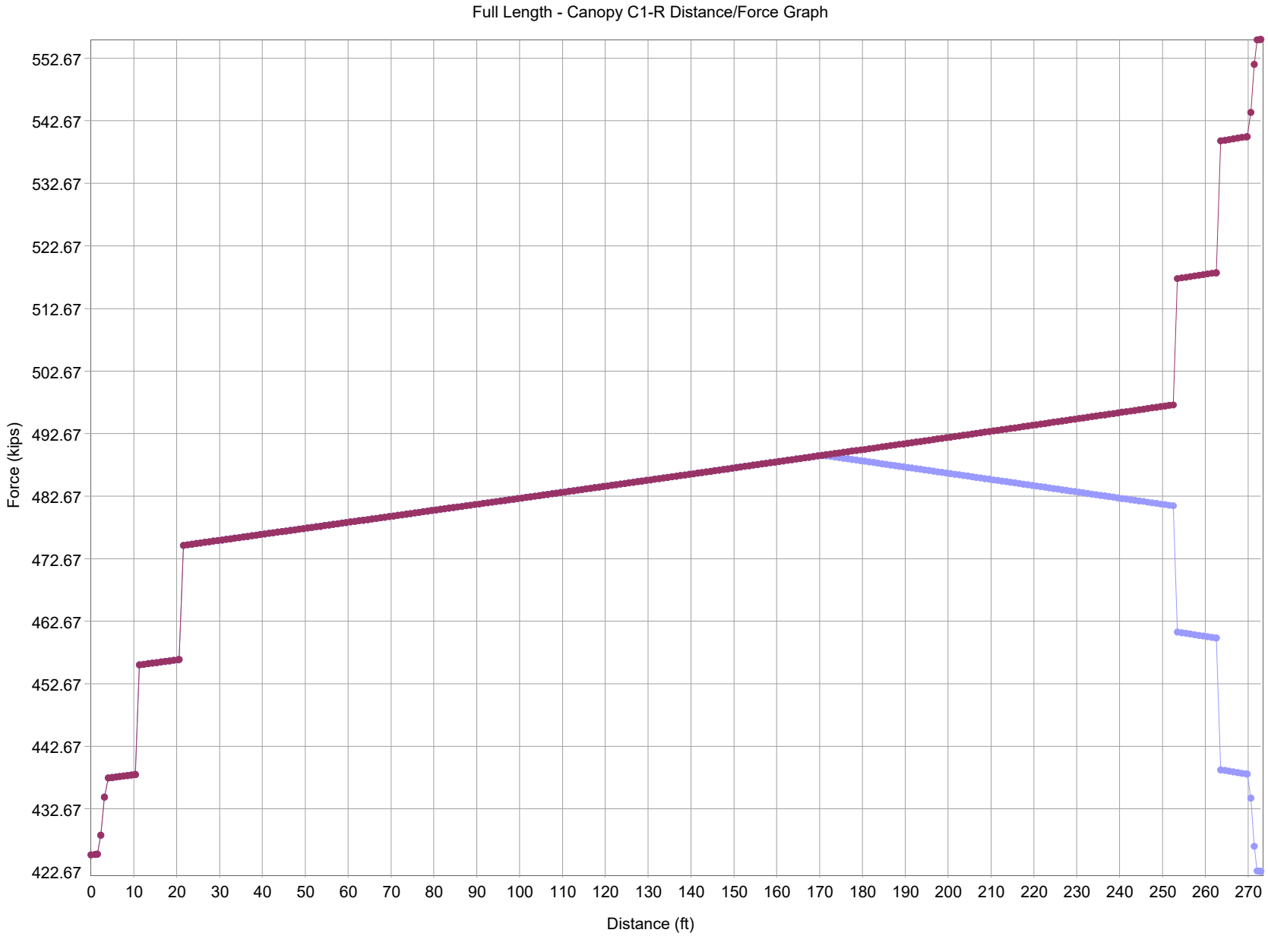

TENDON Main Deck D1-L, Calculations

Segment	Length (ft)	X (ft)	Y (ft)	Z (ft)	Force (kips)	Force after Anchor-Set (kips)	Angle Change (deg)	Force Loss (%)
1	0.0000	-0.8302	1.8333	-2.0558	527.2929	468.5932	0.0000	0.0000
1-3	1.0000	0.1626	1.8333	-1.9363	527.1874	468.6987	0.0000	0.0200
1-3	2.0000	1.1554	1.8333	-1.8168	527.0820	468.8041	0.0000	0.0200
3	2.0263	1.1815	1.8333	-1.8136	523.4745	472.4116	1.5728	0.6844
3	2.8497	2.0014	1.8333	-1.7377	516.2538	479.6323	3.1456	1.3794
3	3.6731	2.8242	1.8333	-1.7069	512.6387	483.2474	1.5728	0.7003
3-5	4.6731	3.8242	1.8333	-1.6969	512.5362	483.3499	0.0000	0.0200
3-5	5.6731	4.8241	1.8333	-1.6869	512.4337	483.4524	0.0000	0.0200
3-5	6.6731	5.8241	1.8333	-1.6769	512.3312	483.5549	0.0000	0.0200
3-5	7.6731	6.8240	1.8333	-1.6669	512.2288	483.6573	0.0000	0.0200
3-5	8.6731	7.8240	1.8333	-1.6569	512.1264	483.7598	0.0000	0.0200
3-5	9.6731	8.8239	1.8333	-1.6469	512.0239	483.8622	0.0000	0.0200
3-5	10.6731	9.8239	1.8333	-1.6369	511.9215	483.9646	0.0000	0.0200
3-5	11.6731	10.8238	1.8333	-1.6269	511.8192	484.0669	0.0000	0.0200
3-5	12.6731	11.8238	1.8333	-1.6169	511.7168	484.1693	0.0000	0.0200
3-5	13.6731	12.8237	1.8333	-1.6069	511.6145	484.2716	0.0000	0.0200
3-5	14.6731	13.8237	1.8333	-1.5969	511.5122	484.3739	0.0000	0.0200
3-5	15.6731	14.8236	1.8333	-1.5869	511.4099	484.4762	0.0000	0.0200
3-5	16.6731	15.8236	1.8333	-1.5769	511.3076	484.5785	0.0000	0.0200
3-5	17.6731	16.8235	1.8333	-1.5669	511.2054	484.6808	0.0000	0.0200
3-5	18.6731	17.8235	1.8333	-1.5569	511.1031	484.7830	0.0000	0.0200
3-5	19.6731	18.8234	1.8333	-1.5469	511.0009	484.8852	0.0000	0.0200
3-5	20.6731	19.8234	1.8333	-1.5369	510.8987	484.9874	0.0000	0.0200
3-5	21.6731	20.8233	1.8333	-1.5269	510.7966	485.0896	0.0000	0.0200
3-5	22.6731	21.8233	1.8333	-1.5169	510.6944	485.1917	0.0000	0.0200
3-5	23.6731	22.8232	1.8333	-1.5069	510.5923	485.2938	0.0000	0.0200
3-5	24.6731	23.8232	1.8333	-1.4969	510.4902	485.3959	0.0000	0.0200
3-5	25.6731	24.8231	1.8333	-1.4869	510.3881	485.4980	0.0000	0.0200
3-5	26.6731	25.8231	1.8333	-1.4769	510.2860	485.6001	0.0000	0.0200
3-5	27.6731	26.8230	1.8333	-1.4669	510.1840	485.7021	0.0000	0.0200
3-5	28.6731	27.8230	1.8333	-1.4569	510.0819	485.8042	0.0000	0.0200
3-5	29.6731	28.8229	1.8333	-1.4469	509.9799	485.9062	0.0000	0.0200

TENDON Main Deck D1-L, Calculations

Segment	Length (ft)	X (ft)	Y (ft)	Z (ft)	Force (kips)	Force after Anchor-Set (kips)	Angle Change (deg)	Force Loss (%)	Containing Element	Additional Info.
3-5	30.6731	29.8229	1.8333	-1.4369	509.8779	486.0082	0.0000	0.0200		
3-5	31.6731	30.8228	1.8333	-1.4269	509.7760	486.1101	0.0000	0.0200		
3-5	32.6731	31.8228	1.8333	-1.4169	509.6740	486.2121	0.0000	0.0200		
3-5	33.6731	32.8227	1.8333	-1.4069	509.5721	486.3140	0.0000	0.0200		
3-5	34.6731	33.8227	1.8333	-1.3969	509.4702	486.4159	0.0000	0.0200		
3-5	35.6731	34.8226	1.8333	-1.3869	509.3683	486.5178	0.0000	0.0200		
3-5	36.6731	35.8226	1.8333	-1.3769	509.2665	486.6197	0.0000	0.0200		
3-5	37.6731	36.8225	1.8333	-1.3669	509.1646	486.7215	0.0000	0.0200		
3-5	38.6731	37.8225	1.8333	-1.3569	509.0628	486.8233	0.0000	0.0200		
3-5	39.6731	38.8224	1.8333	-1.3469	508.9610	486.9251	0.0000	0.0200		
3-5	40.6731	39.8224	1.8333	-1.3369	508.8592	487.0269	0.0000	0.0200		
3-5	41.6731	40.8223	1.8333	-1.3269	508.7575	487.1287	0.0000	0.0200		
3-5	42.6731	41.8223	1.8333	-1.3169	508.6557	487.2304	0.0000	0.0200		
3-5	43.6731	42.8222	1.8333	-1.3069	508.5540	487.3321	0.0000	0.0200		
3-5	44.6731	43.8222	1.8333	-1.2969	508.4523	487.4338	0.0000	0.0200		
3-5	45.6731	44.8221	1.8333	-1.2869	508.3506	487.5355	0.0000	0.0200		
3-5	46.6731	45.8221	1.8333	-1.2769	508.2489	487.6372	0.0000	0.0200		
3-5	47.6731	46.8220	1.8333	-1.2669	508.1473	487.7388	0.0000	0.0200		
3-5	48.6731	47.8220	1.8333	-1.2569	508.0457	487.8404	0.0000	0.0200		
3-5	49.6731	48.8219	1.8333	-1.2469	507.9441	487.9420	0.0000	0.0200		
3-5	50.6731	49.8219	1.8333	-1.2369	507.8425	488.0436	0.0000	0.0200		
3-5	51.6731	50.8218	1.8333	-1.2269	507.7410	488.1452	0.0000	0.0200		
3-5	52.6731	51.8218	1.8333	-1.2169	507.6394	488.2467	0.0000	0.0200		
3-5	53.6731	52.8217	1.8333	-1.2069	507.5379	488.3482	0.0000	0.0200		
3-5	54.6731	53.8217	1.8333	-1.1969	507.4364	488.4497	0.0000	0.0200		
3-5	55.6731	54.8216	1.8333	-1.1869	507.3349	488.5512	0.0000	0.0200		
3-5	56.6731	55.8216	1.8333	-1.1769	507.2335	488.6527	0.0000	0.0200		
3-5	57.6731	56.8215	1.8333	-1.1669	507.1320	488.7541	0.0000	0.0200		
3-5	58.6731	57.8215	1.8333	-1.1569	507.0306	488.8555	0.0000	0.0200		
3-5	59.6731	58.8214	1.8333	-1.1469	506.9292	488.9569	0.0000	0.0200		
3-5	60.6731	59.8214	1.8333	-1.1369	506.8278	489.0583	0.0000	0.0200		
3-5	61.6731	60.8213	1.8333	-1.1269	506.7265	489.1596	0.0000	0.0200		
3-5	62.6731	61.8213	1.8333	-1.1169	506.6251	489.2610	0.0000	0.0200		
3-5	63.6731	62.8212	1.8333	-1.1069	506.5238	489.3623	0.0000	0.0200		

TENDON Main Deck D1-L, Calculations

Segment	Length (ft)	X (ft)	Y (ft)	Z (ft)	Force (kips)	Force after Anchor-Set (kips)	Angle Change (deg)	Force Loss (%)	Containing Element	Additional Info.
3-5	64.6731	63.8212	1.8333	-1.0969	506.4225	489.4636	0.0000	0.0200		
3-5	65.6731	64.8211	1.8333	-1.0869	506.3213	489.5648	0.0000	0.0200		
3-5	66.6731	65.8211	1.8333	-1.0769	506.2200	489.6661	0.0000	0.0200		
3-5	67.6731	66.8210	1.8333	-1.0669	506.1188	489.7673	0.0000	0.0200		
3-5	68.6731	67.8210	1.8333	-1.0569	506.0176	489.8686	0.0000	0.0200		
3-5	69.6731	68.8209	1.8333	-1.0469	505.9164	489.9697	0.0000	0.0200		
3-5	70.6731	69.8209	1.8333	-1.0369	505.8152	490.0709	0.0000	0.0200		
3-5	71.6731	70.8208	1.8333	-1.0269	505.7140	490.1721	0.0000	0.0200		
3-5	72.6731	71.8208	1.8333	-1.0169	505.6129	490.2732	0.0000	0.0200		
3-5	73.6731	72.8207	1.8333	-1.0069	505.5118	490.3743	0.0000	0.0200		
3-5	74.6731	73.8207	1.8333	-0.9969	505.4107	490.4754	0.0000	0.0200		
3-5	75.6731	74.8206	1.8333	-0.9869	505.3096	490.5765	0.0000	0.0200		
3-5	76.6731	75.8206	1.8333	-0.9769	505.2086	490.6775	0.0000	0.0200		
3-5	77.6731	76.8205	1.8333	-0.9669	505.1076	490.7786	0.0000	0.0200		
3-5	78.6731	77.8205	1.8333	-0.9569	505.0065	490.8796	0.0000	0.0200		
3-5	79.6731	78.8204	1.8333	-0.9469	504.9055	490.9806	0.0000	0.0200		
3-5	80.6731	79.8204	1.8333	-0.9369	504.8046	491.0815	0.0000	0.0200		
3-5	81.6731	80.8203	1.8333	-0.9269	504.7036	491.1825	0.0000	0.0200		
3-5	82.6731	81.8203	1.8333	-0.9169	504.6027	491.2834	0.0000	0.0200		
3-5	83.6731	82.8202	1.8333	-0.9069	504.5018	491.3843	0.0000	0.0200		
3-5	84.6731	83.8202	1.8333	-0.8969	504.4009	491.4852	0.0000	0.0200		
3-5	85.6731	84.8201	1.8333	-0.8869	504.3000	491.5861	0.0000	0.0200		
3-5	86.6731	85.8201	1.8333	-0.8769	504.1992	491.6869	0.0000	0.0200		
3-5	87.6731	86.8200	1.8333	-0.8669	504.0983	491.7878	0.0000	0.0200		
3-5	88.6731	87.8200	1.8333	-0.8569	503.9975	491.8886	0.0000	0.0200		
3-5	89.6731	88.8199	1.8333	-0.8469	503.8967	491.9894	0.0000	0.0200		
3-5	90.6731	89.8199	1.8333	-0.8369	503.7960	492.0901	0.0000	0.0200		
3-5	91.6731	90.8198	1.8333	-0.8269	503.6952	492.1909	0.0000	0.0200		
3-5	92.6731	91.8198	1.8333	-0.8169	503.5945	492.2916	0.0000	0.0200		
3-5	93.6731	92.8197	1.8333	-0.8069	503.4938	492.3923	0.0000	0.0200		
3-5	94.6731	93.8197	1.8333	-0.7969	503.3931	492.4930	0.0000	0.0200		
3-5	95.6731	94.8196	1.8333	-0.7869	503.2924	492.5937	0.0000	0.0200		
3-5	96.6731	95.8196	1.8333	-0.7769	503.1918	492.6943	0.0000	0.0200		
3-5	97.6731	96.8195	1.8333	-0.7669	503.0912	492.7950	0.0000	0.0200		

TENDON Main Deck D1-L, Calculations

Segment	Length (ft)	X (ft)	Y (ft)	Z (ft)	Force (kips)	Force after Anchor-Set (kips)	Angle Change (deg)	Force Loss (%)	Containing Element	Additional Info.
3-5	98.6731	97.8195	1.8333	-0.7569	502.9905	492.8956	0.0000	0.0200		
3-5	99.6731	98.8194	1.8333	-0.7469	502.8900	492.9962	0.0000	0.0200		
3-5	100.6731	99.8194	1.8333	-0.7369	502.7894	493.0967	0.0000	0.0200		
3-5	101.6731	100.8193	1.8333	-0.7269	502.6888	493.1973	0.0000	0.0200		
3-5	102.6731	101.8193	1.8333	-0.7169	502.5883	493.2978	0.0000	0.0200		
3-5	103.6731	102.8192	1.8333	-0.7069	502.4878	493.3983	0.0000	0.0200		
3-5	104.6731	103.8192	1.8333	-0.6969	502.3873	493.4988	0.0000	0.0200		
3-5	105.6731	104.8191	1.8333	-0.6869	502.2869	493.5993	0.0000	0.0200		
3-5	106.6731	105.8191	1.8333	-0.6769	502.1864	493.6997	0.0000	0.0200		
3-5	107.6731	106.8190	1.8333	-0.6669	502.0860	493.8001	0.0000	0.0200		
3-5	108.6731	107.8190	1.8333	-0.6569	501.9856	493.9005	0.0000	0.0200		
3-5	109.6731	108.8189	1.8333	-0.6469	501.8852	494.0009	0.0000	0.0200		
3-5	110.6731	109.8189	1.8333	-0.6369	501.7848	494.1013	0.0000	0.0200		
3-5	111.6731	110.8188	1.8333	-0.6269	501.6845	494.2016	0.0000	0.0200		
3-5	112.6731	111.8188	1.8333	-0.6169	501.5841	494.3020	0.0000	0.0200		
3-5	113.6731	112.8187	1.8333	-0.6069	501.4838	494.4023	0.0000	0.0200		
3-5	114.6731	113.8187	1.8333	-0.5969	501.3836	494.5026	0.0000	0.0200		
3-5	115.6731	114.8186	1.8333	-0.5869	501.2833	494.6028	0.0000	0.0200		
3-5	116.6731	115.8186	1.8333	-0.5769	501.1830	494.7031	0.0000	0.0200		
3-5	117.6731	116.8185	1.8333	-0.5669	501.0828	494.8033	0.0000	0.0200		
3-5	118.6731	117.8185	1.8333	-0.5569	500.9826	494.9035	0.0000	0.0200		
3-5	119.6731	118.8184	1.8333	-0.5469	500.8824	495.0037	0.0000	0.0200		
3-5	120.6731	119.8184	1.8333	-0.5369	500.7823	495.1039	0.0000	0.0200		
3-5	121.6731	120.8183	1.8333	-0.5269	500.6821	495.2040	0.0000	0.0200		
3-5	122.6731	121.8183	1.8333	-0.5169	500.5820	495.3041	0.0000	0.0200		
3-5	123.6731	122.8182	1.8333	-0.5069	500.4819	495.4042	0.0000	0.0200		
3-5	124.6731	123.8182	1.8333	-0.4969	500.3818	495.5043	0.0000	0.0200		
3-5	125.6731	124.8181	1.8333	-0.4869	500.2817	495.6044	0.0000	0.0200		
3-5	126.6731	125.8181	1.8333	-0.4769	500.1817	495.7044	0.0000	0.0200		
3-5	127.6731	126.8180	1.8333	-0.4669	500.0816	495.8045	0.0000	0.0200		
3-5	128.6731	127.8180	1.8333	-0.4569	499.9816	495.9045	0.0000	0.0200		
3-5	129.6731	128.8179	1.8333	-0.4469	499.8817	496.0045	0.0000	0.0200		
3-5	130.6731	129.8179	1.8333	-0.4369	499.7817	496.1044	0.0000	0.0200		
3-5	131.6731	130.8178	1.8333	-0.4269	499.6817	496.2044	0.0000	0.0200		

TENDON Main Deck D1-L, Calculations

Segment	Length (ft)	X (ft)	Y (ft)	Z (ft)	Force (kips)	Force after Anchor-Set (kips)	Angle Change (deg)	Force Loss (%)	Containing Element	Additional Info.
3-5	132.6731	131.8178	1.8333	-0.4169	499.5818	496.3043	0.0000	0.0200		
3-5	133.6731	132.8177	1.8333	-0.4069	499.4819	496.4042	0.0000	0.0200		
3-5	134.6731	133.8177	1.8333	-0.3968	499.3820	496.5041	0.0000	0.0200		
3-5	135.6731	134.8176	1.8333	-0.3868	499.2822	496.6040	0.0000	0.0200		
3-5	136.6731	135.8176	1.8333	-0.3768	499.1823	496.7038	0.0000	0.0200		
3-5	137.6731	136.8175	1.8333	-0.3668	499.0825	496.8036	0.0000	0.0200		
3-5	138.6731	137.8175	1.8333	-0.3568	498.9827	496.9034	0.0000	0.0200		
3-5	139.6731	138.8174	1.8333	-0.3468	498.8829	497.0032	0.0000	0.0200		
3-5	140.6731	139.8174	1.8333	-0.3368	498.7831	497.1030	0.0000	0.0200		
3-5	141.6731	140.8173	1.8333	-0.3268	498.6834	497.2027	0.0000	0.0200		
3-5	142.6731	141.8173	1.8333	-0.3168	498.5837	497.3025	0.0000	0.0200		
3-5	143.6731	142.8172	1.8333	-0.3068	498.4839	497.4022	0.0000	0.0200		
3-5	144.6731	143.8172	1.8333	-0.2968	498.3843	497.5019	0.0000	0.0200		
3-5	145.6731	144.8171	1.8333	-0.2868	498.2846	497.6015	0.0000	0.0200		
3-5	146.6731	145.8171	1.8333	-0.2768	498.1849	497.7012	0.0000	0.0200		
3-5	147.6731	146.8170	1.8333	-0.2668	498.0853	497.8008	0.0000	0.0200		
3-5	148.6731	147.8170	1.8333	-0.2568	497.9857	497.9004	0.0000	0.0200		
3-5	149.6731	148.8169	1.8333	-0.2468	497.8861	497.8861	0.0000	0.0200		
3-5	150.6731	149.8169	1.8333	-0.2368	497.7866	497.7866	0.0000	0.0200		
3-5	151.6731	150.8168	1.8333	-0.2268	497.6870	497.6870	0.0000	0.0200		
3-5	152.6731	151.8168	1.8333	-0.2168	497.5875	497.5875	0.0000	0.0200		
3-5	153.6731	152.8167	1.8333	-0.2068	497.4880	497.4880	0.0000	0.0200		
3-5	154.6731	153.8167	1.8333	-0.1968	497.3885	497.3885	0.0000	0.0200		
3-5	155.6731	154.8166	1.8333	-0.1868	497.2890	497.2890	0.0000	0.0200		
3-5	156.6731	155.8166	1.8333	-0.1768	497.1896	497.1896	0.0000	0.0200		
3-5	157.6731	156.8165	1.8333	-0.1668	497.0901	497.0901	0.0000	0.0200		
3-5	158.6731	157.8165	1.8333	-0.1568	496.9907	496.9907	0.0000	0.0200		
3-5	159.6731	158.8164	1.8333	-0.1468	496.8913	496.8913	0.0000	0.0200		
3-5	160.6731	159.8164	1.8333	-0.1368	496.7920	496.7920	0.0000	0.0200		
3-5	161.6731	160.8163	1.8333	-0.1268	496.6926	496.6926	0.0000	0.0200		
3-5	162.6731	161.8163	1.8333	-0.1168	496.5933	496.5933	0.0000	0.0200		
3-5	163.6731	162.8162	1.8333	-0.1068	496.4940	496.4940	0.0000	0.0200		
3-5	164.6731	163.8162	1.8333	-0.0968	496.3947	496.3947	0.0000	0.0200		
3-5	165.6731	164.8161	1.8333	-0.0868	496.2954	496.2954	0.0000	0.0200		

TENDON Main Deck D1-L, Calculations

Segment	Length (ft)	X (ft)	Y (ft)	Z (ft)	Force (kips)	Force after Anchor-Set (kips)	Angle Change (deg)	Force Loss (%)	Containing Element	Additional Info.
3-5	166.6731	165.8161	1.8333	-0.0768	496.1962	496.1962	0.0000	0.0200		
3-5	167.6731	166.8160	1.8333	-0.0668	496.0970	496.0970	0.0000	0.0200		
3-5	168.6731	167.8160	1.8333	-0.0568	495.9977	495.9977	0.0000	0.0200		
3-5	169.6731	168.8159	1.8333	-0.0468	495.8986	495.8986	0.0000	0.0200		
5	170.0275	169.1703	1.8333	-0.0433	493.8204	493.8204	0.9462	0.4191		
5	170.5229	169.6657	1.8333	-0.0465	489.7110	489.7110	1.8924	0.8322		
5	171.0183	170.1607	1.8333	-0.0661	487.6450	487.6450	0.9462	0.4219		
6	171.8438	170.9850	1.8333	-0.1124	487.5645	487.5645	0.0000	0.0165		
6	172.6693	171.8092	1.8333	-0.1586	487.4840	487.4840	0.0000	0.0165		
6	173.3632	172.5019	1.8333	-0.1975	487.4164	487.4164	0.0000	0.0139		

TENDON Main Deck D1-R, Calculations

Segment	Length (ft)	X (ft)	Y (ft)	Z (ft)	Force (kips)	Force after Anchor-Set (kips)	Angle Change (deg)	Force Loss (%)
1	0.0000	-0.8302	-1.8333	-2.0558	527.2929	468.5932	0.0000	0.0000
1-3	1.0000	0.1626	-1.8333	-1.9363	527.1874	468.6987	0.0000	0.0200
1-3	2.0000	1.1554	-1.8333	-1.8168	527.0820	468.8041	0.0000	0.0200
3	2.0263	1.1815	-1.8333	-1.8136	523.4745	472.4116	1.5728	0.6844
3	2.8497	2.0014	-1.8333	-1.7377	516.2538	479.6323	3.1456	1.3794
3	3.6731	2.8242	-1.8333	-1.7069	512.6387	483.2474	1.5728	0.7003
3-5	4.6731	3.8242	-1.8333	-1.6969	512.5362	483.3499	0.0000	0.0200
3-5	5.6731	4.8241	-1.8333	-1.6869	512.4337	483.4524	0.0000	0.0200
3-5	6.6731	5.8241	-1.8333	-1.6769	512.3312	483.5549	0.0000	0.0200
3-5	7.6731	6.8240	-1.8333	-1.6669	512.2288	483.6573	0.0000	0.0200
3-5	8.6731	7.8240	-1.8333	-1.6569	512.1264	483.7598	0.0000	0.0200
3-5	9.6731	8.8239	-1.8333	-1.6469	512.0239	483.8622	0.0000	0.0200
3-5	10.6731	9.8239	-1.8333	-1.6369	511.9215	483.9646	0.0000	0.0200
3-5	11.6731	10.8238	-1.8333	-1.6269	511.8192	484.0669	0.0000	0.0200
3-5	12.6731	11.8238	-1.8333	-1.6169	511.7168	484.1693	0.0000	0.0200
3-5	13.6731	12.8237	-1.8333	-1.6069	511.6145	484.2716	0.0000	0.0200
3-5	14.6731	13.8237	-1.8333	-1.5969	511.5122	484.3739	0.0000	0.0200
3-5	15.6731	14.8236	-1.8333	-1.5869	511.4099	484.4762	0.0000	0.0200
3-5	16.6731	15.8236	-1.8333	-1.5769	511.3076	484.5785	0.0000	0.0200

TENDON Main Deck D1-R, Calculations

Segment	Length (ft)	X (ft)	Y (ft)	Z (ft)	Force (kips)	Force after Anchor-Set (kips)	Angle Change (deg)	Force Loss (%)	Containing Element	Additional Info.
3-5	17.6731	16.8235	-1.8333	-1.5669	511.2054	484.6808	0.0000	0.0200		
3-5	18.6731	17.8235	-1.8333	-1.5569	511.1031	484.7830	0.0000	0.0200		
3-5	19.6731	18.8234	-1.8333	-1.5469	511.0009	484.8852	0.0000	0.0200		
3-5	20.6731	19.8234	-1.8333	-1.5369	510.8987	484.9874	0.0000	0.0200		
3-5	21.6731	20.8233	-1.8333	-1.5269	510.7966	485.0896	0.0000	0.0200		
3-5	22.6731	21.8233	-1.8333	-1.5169	510.6944	485.1917	0.0000	0.0200		
3-5	23.6731	22.8232	-1.8333	-1.5069	510.5923	485.2938	0.0000	0.0200		
3-5	24.6731	23.8232	-1.8333	-1.4969	510.4902	485.3959	0.0000	0.0200		
3-5	25.6731	24.8231	-1.8333	-1.4869	510.3881	485.4980	0.0000	0.0200		
3-5	26.6731	25.8231	-1.8333	-1.4769	510.2860	485.6001	0.0000	0.0200		
3-5	27.6731	26.8230	-1.8333	-1.4669	510.1840	485.7021	0.0000	0.0200		
3-5	28.6731	27.8230	-1.8333	-1.4569	510.0819	485.8042	0.0000	0.0200		
3-5	29.6731	28.8229	-1.8333	-1.4469	509.9799	485.9062	0.0000	0.0200		
3-5	30.6731	29.8229	-1.8333	-1.4369	509.8779	486.0082	0.0000	0.0200		
3-5	31.6731	30.8228	-1.8333	-1.4269	509.7760	486.1101	0.0000	0.0200		
3-5	32.6731	31.8228	-1.8333	-1.4169	509.6740	486.2121	0.0000	0.0200		
3-5	33.6731	32.8227	-1.8333	-1.4069	509.5721	486.3140	0.0000	0.0200		
3-5	34.6731	33.8227	-1.8333	-1.3969	509.4702	486.4159	0.0000	0.0200		
3-5	35.6731	34.8226	-1.8333	-1.3869	509.3683	486.5178	0.0000	0.0200		
3-5	36.6731	35.8226	-1.8333	-1.3769	509.2665	486.6197	0.0000	0.0200		
3-5	37.6731	36.8225	-1.8333	-1.3669	509.1646	486.7215	0.0000	0.0200		
3-5	38.6731	37.8225	-1.8333	-1.3569	509.0628	486.8233	0.0000	0.0200		
3-5	39.6731	38.8224	-1.8333	-1.3469	508.9610	486.9251	0.0000	0.0200		
3-5	40.6731	39.8224	-1.8333	-1.3369	508.8592	487.0269	0.0000	0.0200		
3-5	41.6731	40.8223	-1.8333	-1.3269	508.7575	487.1287	0.0000	0.0200		
3-5	42.6731	41.8223	-1.8333	-1.3169	508.6557	487.2304	0.0000	0.0200		
3-5	43.6731	42.8222	-1.8333	-1.3069	508.5540	487.3321	0.0000	0.0200		
3-5	44.6731	43.8222	-1.8333	-1.2969	508.4523	487.4338	0.0000	0.0200		
3-5	45.6731	44.8221	-1.8333	-1.2869	508.3506	487.5355	0.0000	0.0200		
3-5	46.6731	45.8221	-1.8333	-1.2769	508.2489	487.6372	0.0000	0.0200		
3-5	47.6731	46.8220	-1.8333	-1.2669	508.1473	487.7388	0.0000	0.0200		
3-5	48.6731	47.8220	-1.8333	-1.2569	508.0457	487.8404	0.0000	0.0200		
3-5	49.6731	48.8219	-1.8333	-1.2469	507.9441	487.9420	0.0000	0.0200		
3-5	50.6731	49.8219	-1.8333	-1.2369	507.8425	488.0436	0.0000	0.0200		

TENDON Main Deck D1-R, Calculations

Segment	Length (ft)	X (ft)	Y (ft)	Z (ft)	Force (kips)	Force after Anchor-Set (kips)	Angle Change (deg)	Force Loss (%)	Containing Element	Additional Info.
3-5	51.6731	50.8218	-1.8333	-1.2269	507.7410	488.1452	0.0000	0.0200		
3-5	52.6731	51.8218	-1.8333	-1.2169	507.6394	488.2467	0.0000	0.0200		
3-5	53.6731	52.8217	-1.8333	-1.2069	507.5379	488.3482	0.0000	0.0200		
3-5	54.6731	53.8217	-1.8333	-1.1969	507.4364	488.4497	0.0000	0.0200		
3-5	55.6731	54.8216	-1.8333	-1.1869	507.3349	488.5512	0.0000	0.0200		
3-5	56.6731	55.8216	-1.8333	-1.1769	507.2335	488.6527	0.0000	0.0200		
3-5	57.6731	56.8215	-1.8333	-1.1669	507.1320	488.7541	0.0000	0.0200		
3-5	58.6731	57.8215	-1.8333	-1.1569	507.0306	488.8555	0.0000	0.0200		
3-5	59.6731	58.8214	-1.8333	-1.1469	506.9292	488.9569	0.0000	0.0200		
3-5	60.6731	59.8214	-1.8333	-1.1369	506.8278	489.0583	0.0000	0.0200		
3-5	61.6731	60.8213	-1.8333	-1.1269	506.7265	489.1596	0.0000	0.0200		
3-5	62.6731	61.8213	-1.8333	-1.1169	506.6251	489.2610	0.0000	0.0200		
3-5	63.6731	62.8212	-1.8333	-1.1069	506.5238	489.3623	0.0000	0.0200		
3-5	64.6731	63.8212	-1.8333	-1.0969	506.4225	489.4636	0.0000	0.0200		
3-5	65.6731	64.8211	-1.8333	-1.0869	506.3213	489.5648	0.0000	0.0200		
3-5	66.6731	65.8211	-1.8333	-1.0769	506.2200	489.6661	0.0000	0.0200		
3-5	67.6731	66.8210	-1.8333	-1.0669	506.1188	489.7673	0.0000	0.0200		
3-5	68.6731	67.8210	-1.8333	-1.0569	506.0176	489.8686	0.0000	0.0200		
3-5	69.6731	68.8209	-1.8333	-1.0469	505.9164	489.9697	0.0000	0.0200		
3-5	70.6731	69.8209	-1.8333	-1.0369	505.8152	490.0709	0.0000	0.0200		
3-5	71.6731	70.8208	-1.8333	-1.0269	505.7140	490.1721	0.0000	0.0200		
3-5	72.6731	71.8208	-1.8333	-1.0169	505.6129	490.2732	0.0000	0.0200		
3-5	73.6731	72.8207	-1.8333	-1.0069	505.5118	490.3743	0.0000	0.0200		
3-5	74.6731	73.8207	-1.8333	-0.9969	505.4107	490.4754	0.0000	0.0200		
3-5	75.6731	74.8206	-1.8333	-0.9869	505.3096	490.5765	0.0000	0.0200		
3-5	76.6731	75.8206	-1.8333	-0.9769	505.2086	490.6775	0.0000	0.0200		
3-5	77.6731	76.8205	-1.8333	-0.9669	505.1076	490.7786	0.0000	0.0200		
3-5	78.6731	77.8205	-1.8333	-0.9569	505.0065	490.8796	0.0000	0.0200		
3-5	79.6731	78.8204	-1.8333	-0.9469	504.9055	490.9806	0.0000	0.0200		
3-5	80.6731	79.8204	-1.8333	-0.9369	504.8046	491.0815	0.0000	0.0200		
3-5	81.6731	80.8203	-1.8333	-0.9269	504.7036	491.1825	0.0000	0.0200		
3-5	82.6731	81.8203	-1.8333	-0.9169	504.6027	491.2834	0.0000	0.0200		
3-5	83.6731	82.8202	-1.8333	-0.9069	504.5018	491.3843	0.0000	0.0200		
3-5	84.6731	83.8202	-1.8333	-0.8969	504.4009	491.4852	0.0000	0.0200		

TENDON Main Deck D1-R, Calculations

Segment	Length (ft)	X (ft)	Y (ft)	Z (ft)	Force (kips)	Force after Anchor-Set (kips)	Angle Change (deg)	Force Loss (%)	Containing Element	Additional Info.
3-5	85.6731	84.8201	-1.8333	-0.8869	504.3000	491.5861	0.0000	0.0200		
3-5	86.6731	85.8201	-1.8333	-0.8769	504.1992	491.6869	0.0000	0.0200		
3-5	87.6731	86.8200	-1.8333	-0.8669	504.0983	491.7878	0.0000	0.0200		
3-5	88.6731	87.8200	-1.8333	-0.8569	503.9975	491.8886	0.0000	0.0200		
3-5	89.6731	88.8199	-1.8333	-0.8469	503.8967	491.9894	0.0000	0.0200		
3-5	90.6731	89.8199	-1.8333	-0.8369	503.7960	492.0901	0.0000	0.0200		
3-5	91.6731	90.8198	-1.8333	-0.8269	503.6952	492.1909	0.0000	0.0200		
3-5	92.6731	91.8198	-1.8333	-0.8169	503.5945	492.2916	0.0000	0.0200		
3-5	93.6731	92.8197	-1.8333	-0.8069	503.4938	492.3923	0.0000	0.0200		
3-5	94.6731	93.8197	-1.8333	-0.7969	503.3931	492.4930	0.0000	0.0200		
3-5	95.6731	94.8196	-1.8333	-0.7869	503.2924	492.5937	0.0000	0.0200		
3-5	96.6731	95.8196	-1.8333	-0.7769	503.1918	492.6943	0.0000	0.0200		
3-5	97.6731	96.8195	-1.8333	-0.7669	503.0912	492.7950	0.0000	0.0200		
3-5	98.6731	97.8195	-1.8333	-0.7569	502.9905	492.8956	0.0000	0.0200		
3-5	99.6731	98.8194	-1.8333	-0.7469	502.8900	492.9962	0.0000	0.0200		
3-5	100.6731	99.8194	-1.8333	-0.7369	502.7894	493.0967	0.0000	0.0200		
3-5	101.6731	100.8193	-1.8333	-0.7269	502.6888	493.1973	0.0000	0.0200		
3-5	102.6731	101.8193	-1.8333	-0.7169	502.5883	493.2978	0.0000	0.0200		
3-5	103.6731	102.8192	-1.8333	-0.7069	502.4878	493.3983	0.0000	0.0200		
3-5	104.6731	103.8192	-1.8333	-0.6969	502.3873	493.4988	0.0000	0.0200		
3-5	105.6731	104.8191	-1.8333	-0.6869	502.2869	493.5993	0.0000	0.0200		
3-5	106.6731	105.8191	-1.8333	-0.6769	502.1864	493.6997	0.0000	0.0200		
3-5	107.6731	106.8190	-1.8333	-0.6669	502.0860	493.8001	0.0000	0.0200		
3-5	108.6731	107.8190	-1.8333	-0.6569	501.9856	493.9005	0.0000	0.0200		
3-5	109.6731	108.8189	-1.8333	-0.6469	501.8852	494.0009	0.0000	0.0200		
3-5	110.6731	109.8189	-1.8333	-0.6369	501.7848	494.1013	0.0000	0.0200		
3-5	111.6731	110.8188	-1.8333	-0.6269	501.6845	494.2016	0.0000	0.0200		
3-5	112.6731	111.8188	-1.8333	-0.6169	501.5841	494.3020	0.0000	0.0200		
3-5	113.6731	112.8187	-1.8333	-0.6069	501.4838	494.4023	0.0000	0.0200		
3-5	114.6731	113.8187	-1.8333	-0.5969	501.3836	494.5026	0.0000	0.0200		
3-5	115.6731	114.8186	-1.8333	-0.5869	501.2833	494.6028	0.0000	0.0200		
3-5	116.6731	115.8186	-1.8333	-0.5769	501.1830	494.7031	0.0000	0.0200		
3-5	117.6731	116.8185	-1.8333	-0.5669	501.0828	494.8033	0.0000	0.0200		
3-5	118.6731	117.8185	-1.8333	-0.5569	500.9826	494.9035	0.0000	0.0200		

TENDON Main Deck D1-R, Calculations

Segment	Length (ft)	X (ft)	Y (ft)	Z (ft)	Force (kips)	Force after Anchor-Set (kips)	Angle Change (deg)	Force Loss (%)	Containing Element	Additional Info.
3-5	119.6731	118.8184	-1.8333	-0.5469	500.8824	495.0037	0.0000	0.0200		
3-5	120.6731	119.8184	-1.8333	-0.5369	500.7823	495.1039	0.0000	0.0200		
3-5	121.6731	120.8183	-1.8333	-0.5269	500.6821	495.2040	0.0000	0.0200		
3-5	122.6731	121.8183	-1.8333	-0.5169	500.5820	495.3041	0.0000	0.0200		
3-5	123.6731	122.8182	-1.8333	-0.5069	500.4819	495.4042	0.0000	0.0200		
3-5	124.6731	123.8182	-1.8333	-0.4969	500.3818	495.5043	0.0000	0.0200		
3-5	125.6731	124.8181	-1.8333	-0.4869	500.2817	495.6044	0.0000	0.0200		
3-5	126.6731	125.8181	-1.8333	-0.4769	500.1817	495.7044	0.0000	0.0200		
3-5	127.6731	126.8180	-1.8333	-0.4669	500.0816	495.8045	0.0000	0.0200		
3-5	128.6731	127.8180	-1.8333	-0.4569	499.9816	495.9045	0.0000	0.0200		
3-5	129.6731	128.8179	-1.8333	-0.4469	499.8817	496.0045	0.0000	0.0200		
3-5	130.6731	129.8179	-1.8333	-0.4369	499.7817	496.1044	0.0000	0.0200		
3-5	131.6731	130.8178	-1.8333	-0.4269	499.6817	496.2044	0.0000	0.0200		
3-5	132.6731	131.8178	-1.8333	-0.4169	499.5818	496.3043	0.0000	0.0200		
3-5	133.6731	132.8177	-1.8333	-0.4069	499.4819	496.4042	0.0000	0.0200		
3-5	134.6731	133.8177	-1.8333	-0.3968	499.3820	496.5041	0.0000	0.0200		
3-5	135.6731	134.8176	-1.8333	-0.3868	499.2822	496.6040	0.0000	0.0200		
3-5	136.6731	135.8176	-1.8333	-0.3768	499.1823	496.7038	0.0000	0.0200		
3-5	137.6731	136.8175	-1.8333	-0.3668	499.0825	496.8036	0.0000	0.0200		
3-5	138.6731	137.8175	-1.8333	-0.3568	498.9827	496.9034	0.0000	0.0200		
3-5	139.6731	138.8174	-1.8333	-0.3468	498.8829	497.0032	0.0000	0.0200		
3-5	140.6731	139.8174	-1.8333	-0.3368	498.7831	497.1030	0.0000	0.0200		
3-5	141.6731	140.8173	-1.8333	-0.3268	498.6834	497.2027	0.0000	0.0200		
3-5	142.6731	141.8173	-1.8333	-0.3168	498.5837	497.3025	0.0000	0.0200		
3-5	143.6731	142.8172	-1.8333	-0.3068	498.4839	497.4022	0.0000	0.0200		
3-5	144.6731	143.8172	-1.8333	-0.2968	498.3843	497.5019	0.0000	0.0200		
3-5	145.6731	144.8171	-1.8333	-0.2868	498.2846	497.6015	0.0000	0.0200		
3-5	146.6731	145.8171	-1.8333	-0.2768	498.1849	497.7012	0.0000	0.0200		
3-5	147.6731	146.8170	-1.8333	-0.2668	498.0853	497.8008	0.0000	0.0200		
3-5	148.6731	147.8170	-1.8333	-0.2568	497.9857	497.9004	0.0000	0.0200		
3-5	149.6731	148.8169	-1.8333	-0.2468	497.8861	497.8861	0.0000	0.0200		
3-5	150.6731	149.8169	-1.8333	-0.2368	497.7866	497.7866	0.0000	0.0200		
3-5	151.6731	150.8168	-1.8333	-0.2268	497.6870	497.6870	0.0000	0.0200		
3-5	152.6731	151.8168	-1.8333	-0.2168	497.5875	497.5875	0.0000	0.0200		

TENDON Main Deck D1-R, Calculations

Segment	Length (ft)	X (ft)	Y (ft)	Z (ft)	Force (kips)	Force after Anchor-Set (kips)	Angle Change (deg)	Force Loss (%)	Containing Element	Additional Info.
3-5	153.6731	152.8167	-1.8333	-0.2068	497.4880	497.4880	0.0000	0.0200		
3-5	154.6731	153.8167	-1.8333	-0.1968	497.3885	497.3885	0.0000	0.0200		
3-5	155.6731	154.8166	-1.8333	-0.1868	497.2890	497.2890	0.0000	0.0200		
3-5	156.6731	155.8166	-1.8333	-0.1768	497.1896	497.1896	0.0000	0.0200		
3-5	157.6731	156.8165	-1.8333	-0.1668	497.0901	497.0901	0.0000	0.0200		
3-5	158.6731	157.8165	-1.8333	-0.1568	496.9907	496.9907	0.0000	0.0200		
3-5	159.6731	158.8164	-1.8333	-0.1468	496.8913	496.8913	0.0000	0.0200		
3-5	160.6731	159.8164	-1.8333	-0.1368	496.7920	496.7920	0.0000	0.0200		
3-5	161.6731	160.8163	-1.8333	-0.1268	496.6926	496.6926	0.0000	0.0200		
3-5	162.6731	161.8163	-1.8333	-0.1168	496.5933	496.5933	0.0000	0.0200		
3-5	163.6731	162.8162	-1.8333	-0.1068	496.4940	496.4940	0.0000	0.0200		
3-5	164.6731	163.8162	-1.8333	-0.0968	496.3947	496.3947	0.0000	0.0200		
3-5	165.6731	164.8161	-1.8333	-0.0868	496.2954	496.2954	0.0000	0.0200		
3-5	166.6731	165.8161	-1.8333	-0.0768	496.1962	496.1962	0.0000	0.0200		
3-5	167.6731	166.8160	-1.8333	-0.0668	496.0970	496.0970	0.0000	0.0200		
3-5	168.6731	167.8160	-1.8333	-0.0568	495.9977	495.9977	0.0000	0.0200		
3-5	169.6731	168.8159	-1.8333	-0.0468	495.8986	495.8986	0.0000	0.0200		
5	170.0275	169.1703	-1.8333	-0.0433	493.8204	493.8204	0.9462	0.4191		
5	170.5229	169.6657	-1.8333	-0.0465	489.7110	489.7110	1.8924	0.8322		
5	171.0183	170.1607	-1.8333	-0.0661	487.6450	487.6450	0.9462	0.4219		
6	171.8438	170.9850	-1.8333	-0.1124	487.5645	487.5645	0.0000	0.0165		
6	172.6693	171.8092	-1.8333	-0.1586	487.4840	487.4840	0.0000	0.0165		
6	173.3632	172.5019	-1.8333	-0.1975	487.4164	487.4164	0.0000	0.0139		

TENDON Main Deck D2-L, Calculations

Segment	Length (ft)	X (ft)	Y (ft)	Z (ft)	Force (kips)	Force after Anchor-Set (kips)	Angle Change (deg)	Force Loss (%)
1	0.0000	-0.8302	3.1667	-2.0558	834.8804	741.9393	0.0000	0.0000
1-3	1.0000	0.1626	3.1667	-1.9363	834.7134	742.1063	0.0000	0.0200
1-3	2.0000	1.1554	3.1667	-1.8168	834.5465	742.2732	0.0000	0.0200
3	2.0263	1.1815	3.1667	-1.8136	828.8346	747.9850	1.5728	0.6844
3	2.8497	2.0014	3.1667	-1.7377	817.4019	759.4178	3.1456	1.3794
3	3.6731	2.8242	3.1667	-1.7069	811.6780	765.1417	1.5728	0.7003

TENDON Main Deck D2-L, Calculations

Segment	Length (ft)	X (ft)	Y (ft)	Z (ft)	Force (kips)	Force after Anchor-Set (kips)	Angle Change (deg)	Force Loss (%)	Containing Element	Additional Info.
3-5	4.6731	3.8242	3.1667	-1.6969	811.5157	765.3040	0.0000	0.0200		
3-5	5.6731	4.8241	3.1667	-1.6869	811.3534	765.4663	0.0000	0.0200		
3-5	6.6731	5.8241	3.1667	-1.6769	811.1911	765.6285	0.0000	0.0200		
3-5	7.6731	6.8240	3.1667	-1.6669	811.0289	765.7908	0.0000	0.0200		
3-5	8.6731	7.8240	3.1667	-1.6569	810.8667	765.9530	0.0000	0.0200		
3-5	9.6731	8.8239	3.1667	-1.6469	810.7046	766.1151	0.0000	0.0200		
3-5	10.6731	9.8239	3.1667	-1.6369	810.5424	766.2772	0.0000	0.0200		
3-5	11.6731	10.8238	3.1667	-1.6269	810.3804	766.4393	0.0000	0.0200		
3-5	12.6731	11.8238	3.1667	-1.6169	810.2183	766.6014	0.0000	0.0200		
3-5	13.6731	12.8237	3.1667	-1.6069	810.0563	766.7634	0.0000	0.0200		
3-5	14.6731	13.8237	3.1667	-1.5969	809.8943	766.9254	0.0000	0.0200		
3-5	15.6731	14.8236	3.1667	-1.5869	809.7323	767.0874	0.0000	0.0200		
3-5	16.6731	15.8236	3.1667	-1.5769	809.5704	767.2493	0.0000	0.0200		
3-5	17.6731	16.8235	3.1667	-1.5669	809.4085	767.4112	0.0000	0.0200		
3-5	18.6731	17.8235	3.1667	-1.5569	809.2466	767.5731	0.0000	0.0200		
3-5	19.6731	18.8234	3.1667	-1.5469	809.0848	767.7349	0.0000	0.0200		
3-5	20.6731	19.8234	3.1667	-1.5369	808.9230	767.8967	0.0000	0.0200		
3-5	21.6731	20.8233	3.1667	-1.5269	808.7612	768.0585	0.0000	0.0200		
3-5	22.6731	21.8233	3.1667	-1.5169	808.5995	768.2202	0.0000	0.0200		
3-5	23.6731	22.8232	3.1667	-1.5069	808.4378	768.3819	0.0000	0.0200		
3-5	24.6731	23.8232	3.1667	-1.4969	808.2761	768.5436	0.0000	0.0200		
3-5	25.6731	24.8231	3.1667	-1.4869	808.1145	768.7052	0.0000	0.0200		
3-5	26.6731	25.8231	3.1667	-1.4769	807.9529	768.8668	0.0000	0.0200		
3-5	27.6731	26.8230	3.1667	-1.4669	807.7913	769.0284	0.0000	0.0200		
3-5	28.6731	27.8230	3.1667	-1.4569	807.6297	769.1899	0.0000	0.0200		
3-5	29.6731	28.8229	3.1667	-1.4469	807.4682	769.3515	0.0000	0.0200		
3-5	30.6731	29.8229	3.1667	-1.4369	807.3068	769.5129	0.0000	0.0200		
3-5	31.6731	30.8228	3.1667	-1.4269	807.1453	769.6744	0.0000	0.0200		
3-5	32.6731	31.8228	3.1667	-1.4169	806.9839	769.8358	0.0000	0.0200		
3-5	33.6731	32.8227	3.1667	-1.4069	806.8225	769.9972	0.0000	0.0200		
3-5	34.6731	33.8227	3.1667	-1.3969	806.6612	770.1585	0.0000	0.0200		
3-5	35.6731	34.8226	3.1667	-1.3869	806.4998	770.3198	0.0000	0.0200		
3-5	36.6731	35.8226	3.1667	-1.3769	806.3386	770.4811	0.0000	0.0200		
3-5	37.6731	36.8225	3.1667	-1.3669	806.1773	770.6424	0.0000	0.0200		

TENDON Main Deck D2-L, Calculations

Segment	Length (ft)	X (ft)	Y (ft)	Z (ft)	Force (kips)	Force after Anchor-Set (kips)	Angle Change (deg)	Force Loss (%)	Containing Element	Additional Info.
3-5	38.6731	37.8225	3.1667	-1.3569	806.0161	770.8036	0.0000	0.0200		
3-5	39.6731	38.8224	3.1667	-1.3469	805.8549	770.9648	0.0000	0.0200		
3-5	40.6731	39.8224	3.1667	-1.3369	805.6938	771.1259	0.0000	0.0200		
3-5	41.6731	40.8223	3.1667	-1.3269	805.5326	771.2871	0.0000	0.0200		
3-5	42.6731	41.8223	3.1667	-1.3169	805.3715	771.4481	0.0000	0.0200		
3-5	43.6731	42.8222	3.1667	-1.3069	805.2105	771.6092	0.0000	0.0200		
3-5	44.6731	43.8222	3.1667	-1.2969	805.0495	771.7702	0.0000	0.0200		
3-5	45.6731	44.8221	3.1667	-1.2869	804.8885	771.9312	0.0000	0.0200		
3-5	46.6731	45.8221	3.1667	-1.2769	804.7275	772.0922	0.0000	0.0200		
3-5	47.6731	46.8220	3.1667	-1.2669	804.5666	772.2531	0.0000	0.0200		
3-5	48.6731	47.8220	3.1667	-1.2569	804.4057	772.4140	0.0000	0.0200		
3-5	49.6731	48.8219	3.1667	-1.2469	804.2448	772.5749	0.0000	0.0200		
3-5	50.6731	49.8219	3.1667	-1.2369	804.0840	772.7357	0.0000	0.0200		
3-5	51.6731	50.8218	3.1667	-1.2269	803.9232	772.8965	0.0000	0.0200		
3-5	52.6731	51.8218	3.1667	-1.2169	803.7624	773.0573	0.0000	0.0200		
3-5	53.6731	52.8217	3.1667	-1.2069	803.6017	773.2180	0.0000	0.0200		
3-5	54.6731	53.8217	3.1667	-1.1969	803.4410	773.3787	0.0000	0.0200		
3-5	55.6731	54.8216	3.1667	-1.1869	803.2803	773.5394	0.0000	0.0200		
3-5	56.6731	55.8216	3.1667	-1.1769	803.1197	773.7000	0.0000	0.0200		
3-5	57.6731	56.8215	3.1667	-1.1669	802.9590	773.8606	0.0000	0.0200		
3-5	58.6731	57.8215	3.1667	-1.1569	802.7985	774.0212	0.0000	0.0200		
3-5	59.6731	58.8214	3.1667	-1.1469	802.6379	774.1818	0.0000	0.0200		
3-5	60.6731	59.8214	3.1667	-1.1369	802.4774	774.3423	0.0000	0.0200		
3-5	61.6731	60.8213	3.1667	-1.1269	802.3169	774.5027	0.0000	0.0200		
3-5	62.6731	61.8213	3.1667	-1.1169	802.1565	774.6632	0.0000	0.0200		
3-5	63.6731	62.8212	3.1667	-1.1069	801.9961	774.8236	0.0000	0.0200		
3-5	64.6731	63.8212	3.1667	-1.0969	801.8357	774.9840	0.0000	0.0200		
3-5	65.6731	64.8211	3.1667	-1.0869	801.6753	775.1443	0.0000	0.0200		
3-5	66.6731	65.8211	3.1667	-1.0769	801.5150	775.3047	0.0000	0.0200		
3-5	67.6731	66.8210	3.1667	-1.0669	801.3547	775.4650	0.0000	0.0200		
3-5	68.6731	67.8210	3.1667	-1.0569	801.1945	775.6252	0.0000	0.0200		
3-5	69.6731	68.8209	3.1667	-1.0469	801.0343	775.7854	0.0000	0.0200		
3-5	70.6731	69.8209	3.1667	-1.0369	800.8741	775.9456	0.0000	0.0200		
3-5	71.6731	70.8208	3.1667	-1.0269	800.7139	776.1058	0.0000	0.0200		

TENDON Main Deck D2-L, Calculations

Segment	Length (ft)	X (ft)	Y (ft)	Z (ft)	Force (kips)	Force after Anchor-Set (kips)	Angle Change (deg)	Force Loss (%)	Containing Element	Additional Info.
3-5	72.6731	71.8208	3.1667	-1.0169	800.5538	776.2659	0.0000	0.0200		
3-5	73.6731	72.8207	3.1667	-1.0069	800.3937	776.4260	0.0000	0.0200		
3-5	74.6731	73.8207	3.1667	-0.9969	800.2336	776.5861	0.0000	0.0200		
3-5	75.6731	74.8206	3.1667	-0.9869	800.0736	776.7461	0.0000	0.0200		
3-5	76.6731	75.8206	3.1667	-0.9769	799.9136	776.9061	0.0000	0.0200		
3-5	77.6731	76.8205	3.1667	-0.9669	799.7536	777.0661	0.0000	0.0200		
3-5	78.6731	77.8205	3.1667	-0.9569	799.5937	777.2260	0.0000	0.0200		
3-5	79.6731	78.8204	3.1667	-0.9469	799.4338	777.3859	0.0000	0.0200		
3-5	80.6731	79.8204	3.1667	-0.9369	799.2739	777.5458	0.0000	0.0200		
3-5	81.6731	80.8203	3.1667	-0.9269	799.1141	777.7056	0.0000	0.0200		
3-5	82.6731	81.8203	3.1667	-0.9169	798.9543	777.8654	0.0000	0.0200		
3-5	83.6731	82.8202	3.1667	-0.9069	798.7945	778.0252	0.0000	0.0200		
3-5	84.6731	83.8202	3.1667	-0.8969	798.6348	778.1849	0.0000	0.0200		
3-5	85.6731	84.8201	3.1667	-0.8869	798.4750	778.3446	0.0000	0.0200		
3-5	86.6731	85.8201	3.1667	-0.8769	798.3154	778.5043	0.0000	0.0200		
3-5	87.6731	86.8200	3.1667	-0.8669	798.1557	778.6640	0.0000	0.0200		
3-5	88.6731	87.8200	3.1667	-0.8569	797.9961	778.8236	0.0000	0.0200		
3-5	89.6731	88.8199	3.1667	-0.8469	797.8365	778.9832	0.0000	0.0200		
3-5	90.6731	89.8199	3.1667	-0.8369	797.6770	779.1427	0.0000	0.0200		
3-5	91.6731	90.8198	3.1667	-0.8269	797.5174	779.3022	0.0000	0.0200		
3-5	92.6731	91.8198	3.1667	-0.8169	797.3580	779.4617	0.0000	0.0200		
3-5	93.6731	92.8197	3.1667	-0.8069	797.1985	779.6212	0.0000	0.0200		
3-5	94.6731	93.8197	3.1667	-0.7969	797.0391	779.7806	0.0000	0.0200		
3-5	95.6731	94.8196	3.1667	-0.7869	796.8797	779.9400	0.0000	0.0200		
3-5	96.6731	95.8196	3.1667	-0.7769	796.7203	780.0994	0.0000	0.0200		
3-5	97.6731	96.8195	3.1667	-0.7669	796.5610	780.2587	0.0000	0.0200		
3-5	98.6731	97.8195	3.1667	-0.7569	796.4017	780.4180	0.0000	0.0200		
3-5	99.6731	98.8194	3.1667	-0.7469	796.2424	780.5772	0.0000	0.0200		
3-5	100.6731	99.8194	3.1667	-0.7369	796.0832	780.7365	0.0000	0.0200		
3-5	101.6731	100.8193	3.1667	-0.7269	795.9240	780.8957	0.0000	0.0200		
3-5	102.6731	101.8193	3.1667	-0.7169	795.7648	781.0548	0.0000	0.0200		
3-5	103.6731	102.8192	3.1667	-0.7069	795.6057	781.2140	0.0000	0.0200		
3-5	104.6731	103.8192	3.1667	-0.6969	795.4466	781.3731	0.0000	0.0200		
3-5	105.6731	104.8191	3.1667	-0.6869	795.2875	781.5322	0.0000	0.0200		

TENDON Main Deck D2-L, Calculations

Segment	Length (ft)	X (ft)	Y (ft)	Z (ft)	Force (kips)	Force after Anchor-Set (kips)	Angle Change (deg)	Force Loss (%)	Containing Element	Additional Info.
3-5	106.6731	105.8191	3.1667	-0.6769	795.1285	781.6912	0.0000	0.0200		
3-5	107.6731	106.8190	3.1667	-0.6669	794.9695	781.8502	0.0000	0.0200		
3-5	108.6731	107.8190	3.1667	-0.6569	794.8105	782.0092	0.0000	0.0200		
3-5	109.6731	108.8189	3.1667	-0.6469	794.6515	782.1681	0.0000	0.0200		
3-5	110.6731	109.8189	3.1667	-0.6369	794.4926	782.3271	0.0000	0.0200		
3-5	111.6731	110.8188	3.1667	-0.6269	794.3337	782.4859	0.0000	0.0200		
3-5	112.6731	111.8188	3.1667	-0.6169	794.1749	782.6448	0.0000	0.0200		
3-5	113.6731	112.8187	3.1667	-0.6069	794.0161	782.8036	0.0000	0.0200		
3-5	114.6731	113.8187	3.1667	-0.5969	793.8573	782.9624	0.0000	0.0200		
3-5	115.6731	114.8186	3.1667	-0.5869	793.6985	783.1211	0.0000	0.0200		
3-5	116.6731	115.8186	3.1667	-0.5769	793.5398	783.2799	0.0000	0.0200		
3-5	117.6731	116.8185	3.1667	-0.5669	793.3811	783.4386	0.0000	0.0200		
3-5	118.6731	117.8185	3.1667	-0.5569	793.2225	783.5972	0.0000	0.0200		
3-5	119.6731	118.8184	3.1667	-0.5469	793.0638	783.7559	0.0000	0.0200		
3-5	120.6731	119.8184	3.1667	-0.5369	792.9052	783.9145	0.0000	0.0200		
3-5	121.6731	120.8183	3.1667	-0.5269	792.7467	784.0730	0.0000	0.0200		
3-5	122.6731	121.8183	3.1667	-0.5169	792.5881	784.2315	0.0000	0.0200		
3-5	123.6731	122.8182	3.1667	-0.5069	792.4296	784.3901	0.0000	0.0200		
3-5	124.6731	123.8182	3.1667	-0.4969	792.2712	784.5485	0.0000	0.0200		
3-5	125.6731	124.8181	3.1667	-0.4869	792.1127	784.7070	0.0000	0.0200		
3-5	126.6731	125.8181	3.1667	-0.4769	791.9543	784.8654	0.0000	0.0200		
3-5	127.6731	126.8180	3.1667	-0.4669	791.7959	785.0237	0.0000	0.0200		
3-5	128.6731	127.8180	3.1667	-0.4569	791.6376	785.1821	0.0000	0.0200		
3-5	129.6731	128.8179	3.1667	-0.4469	791.4793	785.3404	0.0000	0.0200		
3-5	130.6731	129.8179	3.1667	-0.4369	791.3210	785.4987	0.0000	0.0200		
3-5	131.6731	130.8178	3.1667	-0.4269	791.1628	785.6569	0.0000	0.0200		
3-5	132.6731	131.8178	3.1667	-0.4169	791.0045	785.8151	0.0000	0.0200		
3-5	133.6731	132.8177	3.1667	-0.4069	790.8464	785.9733	0.0000	0.0200		
3-5	134.6731	133.8177	3.1667	-0.3968	790.6882	786.1315	0.0000	0.0200		
3-5	135.6731	134.8176	3.1667	-0.3868	790.5301	786.2896	0.0000	0.0200		
3-5	136.6731	135.8176	3.1667	-0.3768	790.3720	786.4477	0.0000	0.0200		
3-5	137.6731	136.8175	3.1667	-0.3668	790.2139	786.6058	0.0000	0.0200		
3-5	138.6731	137.8175	3.1667	-0.3568	790.0559	786.7638	0.0000	0.0200		
3-5	139.6731	138.8174	3.1667	-0.3468	789.8979	786.9218	0.0000	0.0200		

TENDON Main Deck D2-L, Calculations

Segment	Length (ft)	X (ft)	Y (ft)	Z (ft)	Force (kips)	Force after Anchor-Set (kips)	Angle Change (deg)	Force Loss (%)	Containing Element	Additional Info.
3-5	140.6731	139.8174	3.1667	-0.3368	789.7399	787.0797	0.0000	0.0200		
3-5	141.6731	140.8173	3.1667	-0.3268	789.5820	787.2377	0.0000	0.0200		
3-5	142.6731	141.8173	3.1667	-0.3168	789.4241	787.3956	0.0000	0.0200		
3-5	143.6731	142.8172	3.1667	-0.3068	789.2662	787.5534	0.0000	0.0200		
3-5	144.6731	143.8172	3.1667	-0.2968	789.1084	787.7113	0.0000	0.0200		
3-5	145.6731	144.8171	3.1667	-0.2868	788.9506	787.8691	0.0000	0.0200		
3-5	146.6731	145.8171	3.1667	-0.2768	788.7928	788.0269	0.0000	0.0200		
3-5	147.6731	146.8170	3.1667	-0.2668	788.6351	788.1846	0.0000	0.0200		
3-5	148.6731	147.8170	3.1667	-0.2568	788.4774	788.3423	0.0000	0.0200		
3-5	149.6731	148.8169	3.1667	-0.2468	788.3197	788.3197	0.0000	0.0200		
3-5	150.6731	149.8169	3.1667	-0.2368	788.1620	788.1620	0.0000	0.0200		
3-5	151.6731	150.8168	3.1667	-0.2268	788.0044	788.0044	0.0000	0.0200		
3-5	152.6731	151.8168	3.1667	-0.2168	787.8468	787.8468	0.0000	0.0200		
3-5	153.6731	152.8167	3.1667	-0.2068	787.6893	787.6893	0.0000	0.0200		
3-5	154.6731	153.8167	3.1667	-0.1968	787.5318	787.5318	0.0000	0.0200		
3-5	155.6731	154.8166	3.1667	-0.1868	787.3743	787.3743	0.0000	0.0200		
3-5	156.6731	155.8166	3.1667	-0.1768	787.2168	787.2168	0.0000	0.0200		
3-5	157.6731	156.8165	3.1667	-0.1668	787.0594	787.0594	0.0000	0.0200		
3-5	158.6731	157.8165	3.1667	-0.1568	786.9020	786.9020	0.0000	0.0200		
3-5	159.6731	158.8164	3.1667	-0.1468	786.7446	786.7446	0.0000	0.0200		
3-5	160.6731	159.8164	3.1667	-0.1368	786.5873	786.5873	0.0000	0.0200		
3-5	161.6731	160.8163	3.1667	-0.1268	786.4300	786.4300	0.0000	0.0200		
3-5	162.6731	161.8163	3.1667	-0.1168	786.2727	786.2727	0.0000	0.0200		
3-5	163.6731	162.8162	3.1667	-0.1068	786.1155	786.1155	0.0000	0.0200		
3-5	164.6731	163.8162	3.1667	-0.0968	785.9583	785.9583	0.0000	0.0200		
3-5	165.6731	164.8161	3.1667	-0.0868	785.8011	785.8011	0.0000	0.0200		
3-5	166.6731	165.8161	3.1667	-0.0768	785.6440	785.6440	0.0000	0.0200		
3-5	167.6731	166.8160	3.1667	-0.0668	785.4868	785.4868	0.0000	0.0200		
3-5	168.6731	167.8160	3.1667	-0.0568	785.3298	785.3298	0.0000	0.0200		
3-5	169.6731	168.8159	3.1667	-0.0468	785.1727	785.1727	0.0000	0.0200		
5	170.0275	169.1703	3.1667	-0.0433	781.8823	781.8823	0.9462	0.4191		
5	170.5229	169.6657	3.1667	-0.0465	775.3758	775.3758	1.8924	0.8322		
5	171.0183	170.1607	3.1667	-0.0661	772.1046	772.1046	0.9462	0.4219		
6	171.8438	170.9850	3.1667	-0.1124	771.9771	771.9771	0.0000	0.0165		

TENDON Main Deck D2-L, Calculations

Segment	Length (ft)	X (ft)	Y (ft)	Z (ft)	Force (kips)	Force after Anchor-Set (kips)	Angle Change (deg)	Force Loss (%)	Containing Element	Additional Info.
6	172.6693	171.8092	3.1667	-0.1586	771.8497	771.8497	0.0000	0.0165		
6	173.3632	172.5019	3.1667	-0.1975	771.7426	771.7426	0.0000	0.0139		

TENDON Main Deck D2-R, Calculations

Segment	Length (ft)	X (ft)	Y (ft)	Z (ft)	Force (kips)	Force after Anchor-Set (kips)	Angle Change (deg)	Force Loss (%)
1	0.0000	-0.8302	-3.1667	-2.0558	834.8804	741.9393	0.0000	0.0000
1-3	1.0000	0.1626	-3.1667	-1.9363	834.7134	742.1063	0.0000	0.0200
1-3	2.0000	1.1554	-3.1667	-1.8168	834.5465	742.2732	0.0000	0.0200
3	2.0263	1.1815	-3.1667	-1.8136	828.8346	747.9850	1.5728	0.6844
3	2.8497	2.0014	-3.1667	-1.7377	817.4019	759.4178	3.1456	1.3794
3	3.6731	2.8242	-3.1667	-1.7069	811.6780	765.1417	1.5728	0.7003
3-5	4.6731	3.8242	-3.1667	-1.6969	811.5157	765.3040	0.0000	0.0200
3-5	5.6731	4.8241	-3.1667	-1.6869	811.3534	765.4663	0.0000	0.0200
3-5	6.6731	5.8241	-3.1667	-1.6769	811.1911	765.6285	0.0000	0.0200
3-5	7.6731	6.8240	-3.1667	-1.6669	811.0289	765.7908	0.0000	0.0200
3-5	8.6731	7.8240	-3.1667	-1.6569	810.8667	765.9530	0.0000	0.0200
3-5	9.6731	8.8239	-3.1667	-1.6469	810.7046	766.1151	0.0000	0.0200
3-5	10.6731	9.8239	-3.1667	-1.6369	810.5424	766.2772	0.0000	0.0200
3-5	11.6731	10.8238	-3.1667	-1.6269	810.3804	766.4393	0.0000	0.0200
3-5	12.6731	11.8238	-3.1667	-1.6169	810.2183	766.6014	0.0000	0.0200
3-5	13.6731	12.8237	-3.1667	-1.6069	810.0563	766.7634	0.0000	0.0200
3-5	14.6731	13.8237	-3.1667	-1.5969	809.8943	766.9254	0.0000	0.0200
3-5	15.6731	14.8236	-3.1667	-1.5869	809.7323	767.0874	0.0000	0.0200
3-5	16.6731	15.8236	-3.1667	-1.5769	809.5704	767.2493	0.0000	0.0200
3-5	17.6731	16.8235	-3.1667	-1.5669	809.4085	767.4112	0.0000	0.0200
3-5	18.6731	17.8235	-3.1667	-1.5569	809.2466	767.5731	0.0000	0.0200
3-5	19.6731	18.8234	-3.1667	-1.5469	809.0848	767.7349	0.0000	0.0200
3-5	20.6731	19.8234	-3.1667	-1.5369	808.9230	767.8967	0.0000	0.0200
3-5	21.6731	20.8233	-3.1667	-1.5269	808.7612	768.0585	0.0000	0.0200
3-5	22.6731	21.8233	-3.1667	-1.5169	808.5995	768.2202	0.0000	0.0200
3-5	23.6731	22.8232	-3.1667	-1.5069	808.4378	768.3819	0.0000	0.0200
3-5	24.6731	23.8232	-3.1667	-1.4969	808.2761	768.5436	0.0000	0.0200

TENDON Main Deck D2-R, Calculations

Segment	Length (ft)	X (ft)	Y (ft)	Z (ft)	Force (kips)	Force after Anchor-Set (kips)	Angle Change (deg)	Force Loss (%)	Containing Element	Additional Info.
3-5	25.6731	24.8231	-3.1667	-1.4869	808.1145	768.7052	0.0000	0.0200		
3-5	26.6731	25.8231	-3.1667	-1.4769	807.9529	768.8668	0.0000	0.0200		
3-5	27.6731	26.8230	-3.1667	-1.4669	807.7913	769.0284	0.0000	0.0200		
3-5	28.6731	27.8230	-3.1667	-1.4569	807.6297	769.1899	0.0000	0.0200		
3-5	29.6731	28.8229	-3.1667	-1.4469	807.4682	769.3515	0.0000	0.0200		
3-5	30.6731	29.8229	-3.1667	-1.4369	807.3068	769.5129	0.0000	0.0200		
3-5	31.6731	30.8228	-3.1667	-1.4269	807.1453	769.6744	0.0000	0.0200		
3-5	32.6731	31.8228	-3.1667	-1.4169	806.9839	769.8358	0.0000	0.0200		
3-5	33.6731	32.8227	-3.1667	-1.4069	806.8225	769.9972	0.0000	0.0200		
3-5	34.6731	33.8227	-3.1667	-1.3969	806.6612	770.1585	0.0000	0.0200		
3-5	35.6731	34.8226	-3.1667	-1.3869	806.4998	770.3198	0.0000	0.0200		
3-5	36.6731	35.8226	-3.1667	-1.3769	806.3386	770.4811	0.0000	0.0200		
3-5	37.6731	36.8225	-3.1667	-1.3669	806.1773	770.6424	0.0000	0.0200		
3-5	38.6731	37.8225	-3.1667	-1.3569	806.0161	770.8036	0.0000	0.0200		
3-5	39.6731	38.8224	-3.1667	-1.3469	805.8549	770.9648	0.0000	0.0200		
3-5	40.6731	39.8224	-3.1667	-1.3369	805.6938	771.1259	0.0000	0.0200		
3-5	41.6731	40.8223	-3.1667	-1.3269	805.5326	771.2871	0.0000	0.0200		
3-5	42.6731	41.8223	-3.1667	-1.3169	805.3715	771.4481	0.0000	0.0200		
3-5	43.6731	42.8222	-3.1667	-1.3069	805.2105	771.6092	0.0000	0.0200		
3-5	44.6731	43.8222	-3.1667	-1.2969	805.0495	771.7702	0.0000	0.0200		
3-5	45.6731	44.8221	-3.1667	-1.2869	804.8885	771.9312	0.0000	0.0200		
3-5	46.6731	45.8221	-3.1667	-1.2769	804.7275	772.0922	0.0000	0.0200		
3-5	47.6731	46.8220	-3.1667	-1.2669	804.5666	772.2531	0.0000	0.0200		
3-5	48.6731	47.8220	-3.1667	-1.2569	804.4057	772.4140	0.0000	0.0200		
3-5	49.6731	48.8219	-3.1667	-1.2469	804.2448	772.5749	0.0000	0.0200		
3-5	50.6731	49.8219	-3.1667	-1.2369	804.0840	772.7357	0.0000	0.0200		
3-5	51.6731	50.8218	-3.1667	-1.2269	803.9232	772.8965	0.0000	0.0200		
3-5	52.6731	51.8218	-3.1667	-1.2169	803.7624	773.0573	0.0000	0.0200		
3-5	53.6731	52.8217	-3.1667	-1.2069	803.6017	773.2180	0.0000	0.0200		
3-5	54.6731	53.8217	-3.1667	-1.1969	803.4410	773.3787	0.0000	0.0200		
3-5	55.6731	54.8216	-3.1667	-1.1869	803.2803	773.5394	0.0000	0.0200		
3-5	56.6731	55.8216	-3.1667	-1.1769	803.1197	773.7000	0.0000	0.0200		
3-5	57.6731	56.8215	-3.1667	-1.1669	802.9590	773.8606	0.0000	0.0200		
3-5	58.6731	57.8215	-3.1667	-1.1569	802.7985	774.0212	0.0000	0.0200		

TENDON Main Deck D2-R, Calculations

Segment	Length (ft)	X (ft)	Y (ft)	Z (ft)	Force (kips)	Force after Anchor-Set (kips)	Angle Change (deg)	Force Loss (%)	Containing Element	Additional Info.
3-5	59.6731	58.8214	-3.1667	-1.1469	802.6379	774.1818	0.0000	0.0200		
3-5	60.6731	59.8214	-3.1667	-1.1369	802.4774	774.3423	0.0000	0.0200		
3-5	61.6731	60.8213	-3.1667	-1.1269	802.3169	774.5027	0.0000	0.0200		
3-5	62.6731	61.8213	-3.1667	-1.1169	802.1565	774.6632	0.0000	0.0200		
3-5	63.6731	62.8212	-3.1667	-1.1069	801.9961	774.8236	0.0000	0.0200		
3-5	64.6731	63.8212	-3.1667	-1.0969	801.8357	774.9840	0.0000	0.0200		
3-5	65.6731	64.8211	-3.1667	-1.0869	801.6753	775.1443	0.0000	0.0200		
3-5	66.6731	65.8211	-3.1667	-1.0769	801.5150	775.3047	0.0000	0.0200		
3-5	67.6731	66.8210	-3.1667	-1.0669	801.3547	775.4650	0.0000	0.0200		
3-5	68.6731	67.8210	-3.1667	-1.0569	801.1945	775.6252	0.0000	0.0200		
3-5	69.6731	68.8209	-3.1667	-1.0469	801.0343	775.7854	0.0000	0.0200		
3-5	70.6731	69.8209	-3.1667	-1.0369	800.8741	775.9456	0.0000	0.0200		
3-5	71.6731	70.8208	-3.1667	-1.0269	800.7139	776.1058	0.0000	0.0200		
3-5	72.6731	71.8208	-3.1667	-1.0169	800.5538	776.2659	0.0000	0.0200		
3-5	73.6731	72.8207	-3.1667	-1.0069	800.3937	776.4260	0.0000	0.0200		
3-5	74.6731	73.8207	-3.1667	-0.9969	800.2336	776.5861	0.0000	0.0200		
3-5	75.6731	74.8206	-3.1667	-0.9869	800.0736	776.7461	0.0000	0.0200		
3-5	76.6731	75.8206	-3.1667	-0.9769	799.9136	776.9061	0.0000	0.0200		
3-5	77.6731	76.8205	-3.1667	-0.9669	799.7536	777.0661	0.0000	0.0200		
3-5	78.6731	77.8205	-3.1667	-0.9569	799.5937	777.2260	0.0000	0.0200		
3-5	79.6731	78.8204	-3.1667	-0.9469	799.4338	777.3859	0.0000	0.0200		
3-5	80.6731	79.8204	-3.1667	-0.9369	799.2739	777.5458	0.0000	0.0200		
3-5	81.6731	80.8203	-3.1667	-0.9269	799.1141	777.7056	0.0000	0.0200		
3-5	82.6731	81.8203	-3.1667	-0.9169	798.9543	777.8654	0.0000	0.0200		
3-5	83.6731	82.8202	-3.1667	-0.9069	798.7945	778.0252	0.0000	0.0200		
3-5	84.6731	83.8202	-3.1667	-0.8969	798.6348	778.1849	0.0000	0.0200		
3-5	85.6731	84.8201	-3.1667	-0.8869	798.4750	778.3446	0.0000	0.0200		
3-5	86.6731	85.8201	-3.1667	-0.8769	798.3154	778.5043	0.0000	0.0200		
3-5	87.6731	86.8200	-3.1667	-0.8669	798.1557	778.6640	0.0000	0.0200		
3-5	88.6731	87.8200	-3.1667	-0.8569	797.9961	778.8236	0.0000	0.0200		
3-5	89.6731	88.8199	-3.1667	-0.8469	797.8365	778.9832	0.0000	0.0200		
3-5	90.6731	89.8199	-3.1667	-0.8369	797.6770	779.1427	0.0000	0.0200		
3-5	91.6731	90.8198	-3.1667	-0.8269	797.5174	779.3022	0.0000	0.0200		
3-5	92.6731	91.8198	-3.1667	-0.8169	797.3580	779.4617	0.0000	0.0200		

TENDON Main Deck D2-R, Calculations

Segment	Length (ft)	X (ft)	Y (ft)	Z (ft)	Force (kips)	Force after Anchor-Set (kips)	Angle Change (deg)	Force Loss (%)	Containing Element	Additional Info.
3-5	93.6731	92.8197	-3.1667	-0.8069	797.1985	779.6212	0.0000	0.0200		
3-5	94.6731	93.8197	-3.1667	-0.7969	797.0391	779.7806	0.0000	0.0200		
3-5	95.6731	94.8196	-3.1667	-0.7869	796.8797	779.9400	0.0000	0.0200		
3-5	96.6731	95.8196	-3.1667	-0.7769	796.7203	780.0994	0.0000	0.0200		
3-5	97.6731	96.8195	-3.1667	-0.7669	796.5610	780.2587	0.0000	0.0200		
3-5	98.6731	97.8195	-3.1667	-0.7569	796.4017	780.4180	0.0000	0.0200		
3-5	99.6731	98.8194	-3.1667	-0.7469	796.2424	780.5772	0.0000	0.0200		
3-5	100.6731	99.8194	-3.1667	-0.7369	796.0832	780.7365	0.0000	0.0200		
3-5	101.6731	100.8193	-3.1667	-0.7269	795.9240	780.8957	0.0000	0.0200		
3-5	102.6731	101.8193	-3.1667	-0.7169	795.7648	781.0548	0.0000	0.0200		
3-5	103.6731	102.8192	-3.1667	-0.7069	795.6057	781.2140	0.0000	0.0200		
3-5	104.6731	103.8192	-3.1667	-0.6969	795.4466	781.3731	0.0000	0.0200		
3-5	105.6731	104.8191	-3.1667	-0.6869	795.2875	781.5322	0.0000	0.0200		
3-5	106.6731	105.8191	-3.1667	-0.6769	795.1285	781.6912	0.0000	0.0200		
3-5	107.6731	106.8190	-3.1667	-0.6669	794.9695	781.8502	0.0000	0.0200		
3-5	108.6731	107.8190	-3.1667	-0.6569	794.8105	782.0092	0.0000	0.0200		
3-5	109.6731	108.8189	-3.1667	-0.6469	794.6515	782.1681	0.0000	0.0200		
3-5	110.6731	109.8189	-3.1667	-0.6369	794.4926	782.3271	0.0000	0.0200		
3-5	111.6731	110.8188	-3.1667	-0.6269	794.3337	782.4859	0.0000	0.0200		
3-5	112.6731	111.8188	-3.1667	-0.6169	794.1749	782.6448	0.0000	0.0200		
3-5	113.6731	112.8187	-3.1667	-0.6069	794.0161	782.8036	0.0000	0.0200		
3-5	114.6731	113.8187	-3.1667	-0.5969	793.8573	782.9624	0.0000	0.0200		
3-5	115.6731	114.8186	-3.1667	-0.5869	793.6985	783.1211	0.0000	0.0200		
3-5	116.6731	115.8186	-3.1667	-0.5769	793.5398	783.2799	0.0000	0.0200		
3-5	117.6731	116.8185	-3.1667	-0.5669	793.3811	783.4386	0.0000	0.0200		
3-5	118.6731	117.8185	-3.1667	-0.5569	793.2225	783.5972	0.0000	0.0200		
3-5	119.6731	118.8184	-3.1667	-0.5469	793.0638	783.7559	0.0000	0.0200		
3-5	120.6731	119.8184	-3.1667	-0.5369	792.9052	783.9145	0.0000	0.0200		
3-5	121.6731	120.8183	-3.1667	-0.5269	792.7467	784.0730	0.0000	0.0200		
3-5	122.6731	121.8183	-3.1667	-0.5169	792.5881	784.2315	0.0000	0.0200		
3-5	123.6731	122.8182	-3.1667	-0.5069	792.4296	784.3901	0.0000	0.0200		
3-5	124.6731	123.8182	-3.1667	-0.4969	792.2712	784.5485	0.0000	0.0200		
3-5	125.6731	124.8181	-3.1667	-0.4869	792.1127	784.7070	0.0000	0.0200		
3-5	126.6731	125.8181	-3.1667	-0.4769	791.9543	784.8654	0.0000	0.0200		

TENDON Main Deck D2-R, Calculations

Segment	Length (ft)	X (ft)	Y (ft)	Z (ft)	Force (kips)	Force after Anchor-Set (kips)	Angle Change (deg)	Force Loss (%)	Containing Element	Additional Info.
3-5	127.6731	126.8180	-3.1667	-0.4669	791.7959	785.0237	0.0000	0.0200		
3-5	128.6731	127.8180	-3.1667	-0.4569	791.6376	785.1821	0.0000	0.0200		
3-5	129.6731	128.8179	-3.1667	-0.4469	791.4793	785.3404	0.0000	0.0200		
3-5	130.6731	129.8179	-3.1667	-0.4369	791.3210	785.4987	0.0000	0.0200		
3-5	131.6731	130.8178	-3.1667	-0.4269	791.1628	785.6569	0.0000	0.0200		
3-5	132.6731	131.8178	-3.1667	-0.4169	791.0045	785.8151	0.0000	0.0200		
3-5	133.6731	132.8177	-3.1667	-0.4069	790.8464	785.9733	0.0000	0.0200		
3-5	134.6731	133.8177	-3.1667	-0.3968	790.6882	786.1315	0.0000	0.0200		
3-5	135.6731	134.8176	-3.1667	-0.3868	790.5301	786.2896	0.0000	0.0200		
3-5	136.6731	135.8176	-3.1667	-0.3768	790.3720	786.4477	0.0000	0.0200		
3-5	137.6731	136.8175	-3.1667	-0.3668	790.2139	786.6058	0.0000	0.0200		
3-5	138.6731	137.8175	-3.1667	-0.3568	790.0559	786.7638	0.0000	0.0200		
3-5	139.6731	138.8174	-3.1667	-0.3468	789.8979	786.9218	0.0000	0.0200		
3-5	140.6731	139.8174	-3.1667	-0.3368	789.7399	787.0797	0.0000	0.0200		
3-5	141.6731	140.8173	-3.1667	-0.3268	789.5820	787.2377	0.0000	0.0200		
3-5	142.6731	141.8173	-3.1667	-0.3168	789.4241	787.3956	0.0000	0.0200		
3-5	143.6731	142.8172	-3.1667	-0.3068	789.2662	787.5534	0.0000	0.0200		
3-5	144.6731	143.8172	-3.1667	-0.2968	789.1084	787.7113	0.0000	0.0200		
3-5	145.6731	144.8171	-3.1667	-0.2868	788.9506	787.8691	0.0000	0.0200		
3-5	146.6731	145.8171	-3.1667	-0.2768	788.7928	788.0269	0.0000	0.0200		
3-5	147.6731	146.8170	-3.1667	-0.2668	788.6351	788.1846	0.0000	0.0200		
3-5	148.6731	147.8170	-3.1667	-0.2568	788.4774	788.3423	0.0000	0.0200		
3-5	149.6731	148.8169	-3.1667	-0.2468	788.3197	788.3197	0.0000	0.0200		
3-5	150.6731	149.8169	-3.1667	-0.2368	788.1620	788.1620	0.0000	0.0200		
3-5	151.6731	150.8168	-3.1667	-0.2268	788.0044	788.0044	0.0000	0.0200		
3-5	152.6731	151.8168	-3.1667	-0.2168	787.8468	787.8468	0.0000	0.0200		
3-5	153.6731	152.8167	-3.1667	-0.2068	787.6893	787.6893	0.0000	0.0200		
3-5	154.6731	153.8167	-3.1667	-0.1968	787.5318	787.5318	0.0000	0.0200		
3-5	155.6731	154.8166	-3.1667	-0.1868	787.3743	787.3743	0.0000	0.0200		
3-5	156.6731	155.8166	-3.1667	-0.1768	787.2168	787.2168	0.0000	0.0200		
3-5	157.6731	156.8165	-3.1667	-0.1668	787.0594	787.0594	0.0000	0.0200		
3-5	158.6731	157.8165	-3.1667	-0.1568	786.9020	786.9020	0.0000	0.0200		
3-5	159.6731	158.8164	-3.1667	-0.1468	786.7446	786.7446	0.0000	0.0200		
3-5	160.6731	159.8164	-3.1667	-0.1368	786.5873	786.5873	0.0000	0.0200		

TENDON Main Deck D2-R, Calculations

Segment	Length (ft)	X (ft)	Y (ft)	Z (ft)	Force (kips)	Force after Anchor-Set (kips)	Angle Change (deg)	Force Loss (%)	Containing Element	Additional Info.
3-5	161.6731	160.8163	-3.1667	-0.1268	786.4300	786.4300	0.0000	0.0200		
3-5	162.6731	161.8163	-3.1667	-0.1168	786.2727	786.2727	0.0000	0.0200		
3-5	163.6731	162.8162	-3.1667	-0.1068	786.1155	786.1155	0.0000	0.0200		
3-5	164.6731	163.8162	-3.1667	-0.0968	785.9583	785.9583	0.0000	0.0200		
3-5	165.6731	164.8161	-3.1667	-0.0868	785.8011	785.8011	0.0000	0.0200		
3-5	166.6731	165.8161	-3.1667	-0.0768	785.6440	785.6440	0.0000	0.0200		
3-5	167.6731	166.8160	-3.1667	-0.0668	785.4868	785.4868	0.0000	0.0200		
3-5	168.6731	167.8160	-3.1667	-0.0568	785.3298	785.3298	0.0000	0.0200		
3-5	169.6731	168.8159	-3.1667	-0.0468	785.1727	785.1727	0.0000	0.0200		
5	170.0275	169.1703	-3.1667	-0.0433	781.8823	781.8823	0.9462	0.4191		
5	170.5229	169.6657	-3.1667	-0.0465	775.3758	775.3758	1.8924	0.8322		
5	171.0183	170.1607	-3.1667	-0.0661	772.1046	772.1046	0.9462	0.4219		
6	171.8438	170.9850	-3.1667	-0.1124	771.9771	771.9771	0.0000	0.0165		
6	172.6693	171.8092	-3.1667	-0.1586	771.8497	771.8497	0.0000	0.0165		
6	173.3632	172.5019	-3.1667	-0.1975	771.7426	771.7426	0.0000	0.0139		

TENDON Main Deck D3-L, Calculations

Segment	Length (ft)	X (ft)	Y (ft)	Z (ft)	Force (kips)	Force after Anchor-Set (kips)	Angle Change (deg)	Force Loss (%)
1	0.0000	-0.8302	4.6667	-2.0558	834.8804	741.9393	0.0000	0.0000
1-3	1.0000	0.1626	4.6667	-1.9363	834.7134	742.1063	0.0000	0.0200
1-3	2.0000	1.1554	4.6667	-1.8168	834.5465	742.2732	0.0000	0.0200
3	2.0263	1.1815	4.6667	-1.8136	828.8346	747.9850	1.5728	0.6844
3	2.8497	2.0014	4.6667	-1.7377	817.4019	759.4178	3.1456	1.3794
3	3.6731	2.8242	4.6667	-1.7069	811.6780	765.1417	1.5728	0.7003
3-5	4.6731	3.8242	4.6667	-1.6969	811.5157	765.3040	0.0000	0.0200
3-5	5.6731	4.8241	4.6667	-1.6869	811.3534	765.4663	0.0000	0.0200
3-5	6.6731	5.8241	4.6667	-1.6769	811.1911	765.6285	0.0000	0.0200
3-5	7.6731	6.8240	4.6667	-1.6669	811.0289	765.7908	0.0000	0.0200
3-5	8.6731	7.8240	4.6667	-1.6569	810.8667	765.9530	0.0000	0.0200
3-5	9.6731	8.8239	4.6667	-1.6469	810.7046	766.1151	0.0000	0.0200
3-5	10.6731	9.8239	4.6667	-1.6369	810.5424	766.2772	0.0000	0.0200
3-5	11.6731	10.8238	4.6667	-1.6269	810.3804	766.4393	0.0000	0.0200

TENDON Main Deck D3-L, Calculations

Segment	Length (ft)	X (ft)	Y (ft)	Z (ft)	Force (kips)	Force after Anchor-Set (kips)	Angle Change (deg)	Force Loss (%)	Containing Element	Additional Info.
3-5	12.6731	11.8238	4.6667	-1.6169	810.2183	766.6014	0.0000	0.0200		
3-5	13.6731	12.8237	4.6667	-1.6069	810.0563	766.7634	0.0000	0.0200		
3-5	14.6731	13.8237	4.6667	-1.5969	809.8943	766.9254	0.0000	0.0200		
3-5	15.6731	14.8236	4.6667	-1.5869	809.7323	767.0874	0.0000	0.0200		
3-5	16.6731	15.8236	4.6667	-1.5769	809.5704	767.2493	0.0000	0.0200		
3-5	17.6731	16.8235	4.6667	-1.5669	809.4085	767.4112	0.0000	0.0200		
3-5	18.6731	17.8235	4.6667	-1.5569	809.2466	767.5731	0.0000	0.0200		
3-5	19.6731	18.8234	4.6667	-1.5469	809.0848	767.7349	0.0000	0.0200		
3-5	20.6731	19.8234	4.6667	-1.5369	808.9230	767.8967	0.0000	0.0200		
3-5	21.6731	20.8233	4.6667	-1.5269	808.7612	768.0585	0.0000	0.0200		
3-5	22.6731	21.8233	4.6667	-1.5169	808.5995	768.2202	0.0000	0.0200		
3-5	23.6731	22.8232	4.6667	-1.5069	808.4378	768.3819	0.0000	0.0200		
3-5	24.6731	23.8232	4.6667	-1.4969	808.2761	768.5436	0.0000	0.0200		
3-5	25.6731	24.8231	4.6667	-1.4869	808.1145	768.7052	0.0000	0.0200		
3-5	26.6731	25.8231	4.6667	-1.4769	807.9529	768.8668	0.0000	0.0200		
3-5	27.6731	26.8230	4.6667	-1.4669	807.7913	769.0284	0.0000	0.0200		
3-5	28.6731	27.8230	4.6667	-1.4569	807.6297	769.1899	0.0000	0.0200		
3-5	29.6731	28.8229	4.6667	-1.4469	807.4682	769.3515	0.0000	0.0200		
3-5	30.6731	29.8229	4.6667	-1.4369	807.3068	769.5129	0.0000	0.0200		
3-5	31.6731	30.8228	4.6667	-1.4269	807.1453	769.6744	0.0000	0.0200		
3-5	32.6731	31.8228	4.6667	-1.4169	806.9839	769.8358	0.0000	0.0200		
3-5	33.6731	32.8227	4.6667	-1.4069	806.8225	769.9972	0.0000	0.0200		
3-5	34.6731	33.8227	4.6667	-1.3969	806.6612	770.1585	0.0000	0.0200		
3-5	35.6731	34.8226	4.6667	-1.3869	806.4998	770.3198	0.0000	0.0200		
3-5	36.6731	35.8226	4.6667	-1.3769	806.3386	770.4811	0.0000	0.0200		
3-5	37.6731	36.8225	4.6667	-1.3669	806.1773	770.6424	0.0000	0.0200		
3-5	38.6731	37.8225	4.6667	-1.3569	806.0161	770.8036	0.0000	0.0200		
3-5	39.6731	38.8224	4.6667	-1.3469	805.8549	770.9648	0.0000	0.0200		
3-5	40.6731	39.8224	4.6667	-1.3369	805.6938	771.1259	0.0000	0.0200		
3-5	41.6731	40.8223	4.6667	-1.3269	805.5326	771.2871	0.0000	0.0200		
3-5	42.6731	41.8223	4.6667	-1.3169	805.3715	771.4481	0.0000	0.0200		
3-5	43.6731	42.8222	4.6667	-1.3069	805.2105	771.6092	0.0000	0.0200		
3-5	44.6731	43.8222	4.6667	-1.2969	805.0495	771.7702	0.0000	0.0200		
3-5	45.6731	44.8221	4.6667	-1.2869	804.8885	771.9312	0.0000	0.0200		

TENDON Main Deck D3-L, Calculations

Segment	Length (ft)	X (ft)	Y (ft)	Z (ft)	Force (kips)	Force after Anchor-Set (kips)	Angle Change (deg)	Force Loss (%)	Containing Element	Additional Info.
3-5	46.6731	45.8221	4.6667	-1.2769	804.7275	772.0922	0.0000	0.0200		
3-5	47.6731	46.8220	4.6667	-1.2669	804.5666	772.2531	0.0000	0.0200		
3-5	48.6731	47.8220	4.6667	-1.2569	804.4057	772.4140	0.0000	0.0200		
3-5	49.6731	48.8219	4.6667	-1.2469	804.2448	772.5749	0.0000	0.0200		
3-5	50.6731	49.8219	4.6667	-1.2369	804.0840	772.7357	0.0000	0.0200		
3-5	51.6731	50.8218	4.6667	-1.2269	803.9232	772.8965	0.0000	0.0200		
3-5	52.6731	51.8218	4.6667	-1.2169	803.7624	773.0573	0.0000	0.0200		
3-5	53.6731	52.8217	4.6667	-1.2069	803.6017	773.2180	0.0000	0.0200		
3-5	54.6731	53.8217	4.6667	-1.1969	803.4410	773.3787	0.0000	0.0200		
3-5	55.6731	54.8216	4.6667	-1.1869	803.2803	773.5394	0.0000	0.0200		
3-5	56.6731	55.8216	4.6667	-1.1769	803.1197	773.7000	0.0000	0.0200		
3-5	57.6731	56.8215	4.6667	-1.1669	802.9590	773.8606	0.0000	0.0200		
3-5	58.6731	57.8215	4.6667	-1.1569	802.7985	774.0212	0.0000	0.0200		
3-5	59.6731	58.8214	4.6667	-1.1469	802.6379	774.1818	0.0000	0.0200		
3-5	60.6731	59.8214	4.6667	-1.1369	802.4774	774.3423	0.0000	0.0200		
3-5	61.6731	60.8213	4.6667	-1.1269	802.3169	774.5027	0.0000	0.0200		
3-5	62.6731	61.8213	4.6667	-1.1169	802.1565	774.6632	0.0000	0.0200		
3-5	63.6731	62.8212	4.6667	-1.1069	801.9961	774.8236	0.0000	0.0200		
3-5	64.6731	63.8212	4.6667	-1.0969	801.8357	774.9840	0.0000	0.0200		
3-5	65.6731	64.8211	4.6667	-1.0869	801.6753	775.1443	0.0000	0.0200		
3-5	66.6731	65.8211	4.6667	-1.0769	801.5150	775.3047	0.0000	0.0200		
3-5	67.6731	66.8210	4.6667	-1.0669	801.3547	775.4650	0.0000	0.0200		
3-5	68.6731	67.8210	4.6667	-1.0569	801.1945	775.6252	0.0000	0.0200		
3-5	69.6731	68.8209	4.6667	-1.0469	801.0343	775.7854	0.0000	0.0200		
3-5	70.6731	69.8209	4.6667	-1.0369	800.8741	775.9456	0.0000	0.0200		
3-5	71.6731	70.8208	4.6667	-1.0269	800.7139	776.1058	0.0000	0.0200		
3-5	72.6731	71.8208	4.6667	-1.0169	800.5538	776.2659	0.0000	0.0200		
3-5	73.6731	72.8207	4.6667	-1.0069	800.3937	776.4260	0.0000	0.0200		
3-5	74.6731	73.8207	4.6667	-0.9969	800.2336	776.5861	0.0000	0.0200		
3-5	75.6731	74.8206	4.6667	-0.9869	800.0736	776.7461	0.0000	0.0200		
3-5	76.6731	75.8206	4.6667	-0.9769	799.9136	776.9061	0.0000	0.0200		
3-5	77.6731	76.8205	4.6667	-0.9669	799.7536	777.0661	0.0000	0.0200		
3-5	78.6731	77.8205	4.6667	-0.9569	799.5937	777.2260	0.0000	0.0200		
3-5	79.6731	78.8204	4.6667	-0.9469	799.4338	777.3859	0.0000	0.0200		

TENDON Main Deck D3-L, Calculations

Segment	Length (ft)	X (ft)	Y (ft)	Z (ft)	Force (kips)	Force after Anchor-Set (kips)	Angle Change (deg)	Force Loss (%)	Containing Element	Additional Info.
3-5	80.6731	79.8204	4.6667	-0.9369	799.2739	777.5458	0.0000	0.0200		
3-5	81.6731	80.8203	4.6667	-0.9269	799.1141	777.7056	0.0000	0.0200		
3-5	82.6731	81.8203	4.6667	-0.9169	798.9543	777.8654	0.0000	0.0200		
3-5	83.6731	82.8202	4.6667	-0.9069	798.7945	778.0252	0.0000	0.0200		
3-5	84.6731	83.8202	4.6667	-0.8969	798.6348	778.1849	0.0000	0.0200		
3-5	85.6731	84.8201	4.6667	-0.8869	798.4750	778.3446	0.0000	0.0200		
3-5	86.6731	85.8201	4.6667	-0.8769	798.3154	778.5043	0.0000	0.0200		
3-5	87.6731	86.8200	4.6667	-0.8669	798.1557	778.6640	0.0000	0.0200		
3-5	88.6731	87.8200	4.6667	-0.8569	797.9961	778.8236	0.0000	0.0200		
3-5	89.6731	88.8199	4.6667	-0.8469	797.8365	778.9832	0.0000	0.0200		
3-5	90.6731	89.8199	4.6667	-0.8369	797.6770	779.1427	0.0000	0.0200		
3-5	91.6731	90.8198	4.6667	-0.8269	797.5174	779.3022	0.0000	0.0200		
3-5	92.6731	91.8198	4.6667	-0.8169	797.3580	779.4617	0.0000	0.0200		
3-5	93.6731	92.8197	4.6667	-0.8069	797.1985	779.6212	0.0000	0.0200		
3-5	94.6731	93.8197	4.6667	-0.7969	797.0391	779.7806	0.0000	0.0200		
3-5	95.6731	94.8196	4.6667	-0.7869	796.8797	779.9400	0.0000	0.0200		
3-5	96.6731	95.8196	4.6667	-0.7769	796.7203	780.0994	0.0000	0.0200		
3-5	97.6731	96.8195	4.6667	-0.7669	796.5610	780.2587	0.0000	0.0200		
3-5	98.6731	97.8195	4.6667	-0.7569	796.4017	780.4180	0.0000	0.0200		
3-5	99.6731	98.8194	4.6667	-0.7469	796.2424	780.5772	0.0000	0.0200		
3-5	100.6731	99.8194	4.6667	-0.7369	796.0832	780.7365	0.0000	0.0200		
3-5	101.6731	100.8193	4.6667	-0.7269	795.9240	780.8957	0.0000	0.0200		
3-5	102.6731	101.8193	4.6667	-0.7169	795.7648	781.0548	0.0000	0.0200		
3-5	103.6731	102.8192	4.6667	-0.7069	795.6057	781.2140	0.0000	0.0200		
3-5	104.6731	103.8192	4.6667	-0.6969	795.4466	781.3731	0.0000	0.0200		
3-5	105.6731	104.8191	4.6667	-0.6869	795.2875	781.5322	0.0000	0.0200		
3-5	106.6731	105.8191	4.6667	-0.6769	795.1285	781.6912	0.0000	0.0200		
3-5	107.6731	106.8190	4.6667	-0.6669	794.9695	781.8502	0.0000	0.0200		
3-5	108.6731	107.8190	4.6667	-0.6569	794.8105	782.0092	0.0000	0.0200		
3-5	109.6731	108.8189	4.6667	-0.6469	794.6515	782.1681	0.0000	0.0200		
3-5	110.6731	109.8189	4.6667	-0.6369	794.4926	782.3271	0.0000	0.0200		
3-5	111.6731	110.8188	4.6667	-0.6269	794.3337	782.4859	0.0000	0.0200		
3-5	112.6731	111.8188	4.6667	-0.6169	794.1749	782.6448	0.0000	0.0200		
3-5	113.6731	112.8187	4.6667	-0.6069	794.0161	782.8036	0.0000	0.0200		

TENDON Main Deck D3-L, Calculations

Segment	Length (ft)	X (ft)	Y (ft)	Z (ft)	Force (kips)	Force after Anchor-Set (kips)	Angle Change (deg)	Force Loss (%)	Containing Element	Additional Info.
3-5	114.6731	113.8187	4.6667	-0.5969	793.8573	782.9624	0.0000	0.0200		
3-5	115.6731	114.8186	4.6667	-0.5869	793.6985	783.1211	0.0000	0.0200		
3-5	116.6731	115.8186	4.6667	-0.5769	793.5398	783.2799	0.0000	0.0200		
3-5	117.6731	116.8185	4.6667	-0.5669	793.3811	783.4386	0.0000	0.0200		
3-5	118.6731	117.8185	4.6667	-0.5569	793.2225	783.5972	0.0000	0.0200		
3-5	119.6731	118.8184	4.6667	-0.5469	793.0638	783.7559	0.0000	0.0200		
3-5	120.6731	119.8184	4.6667	-0.5369	792.9052	783.9145	0.0000	0.0200		
3-5	121.6731	120.8183	4.6667	-0.5269	792.7467	784.0730	0.0000	0.0200		
3-5	122.6731	121.8183	4.6667	-0.5169	792.5881	784.2315	0.0000	0.0200		
3-5	123.6731	122.8182	4.6667	-0.5069	792.4296	784.3901	0.0000	0.0200		
3-5	124.6731	123.8182	4.6667	-0.4969	792.2712	784.5485	0.0000	0.0200		
3-5	125.6731	124.8181	4.6667	-0.4869	792.1127	784.7070	0.0000	0.0200		
3-5	126.6731	125.8181	4.6667	-0.4769	791.9543	784.8654	0.0000	0.0200		
3-5	127.6731	126.8180	4.6667	-0.4669	791.7959	785.0237	0.0000	0.0200		
3-5	128.6731	127.8180	4.6667	-0.4569	791.6376	785.1821	0.0000	0.0200		
3-5	129.6731	128.8179	4.6667	-0.4469	791.4793	785.3404	0.0000	0.0200		
3-5	130.6731	129.8179	4.6667	-0.4369	791.3210	785.4987	0.0000	0.0200		
3-5	131.6731	130.8178	4.6667	-0.4269	791.1628	785.6569	0.0000	0.0200		
3-5	132.6731	131.8178	4.6667	-0.4169	791.0045	785.8151	0.0000	0.0200		
3-5	133.6731	132.8177	4.6667	-0.4069	790.8464	785.9733	0.0000	0.0200		
3-5	134.6731	133.8177	4.6667	-0.3968	790.6882	786.1315	0.0000	0.0200		
3-5	135.6731	134.8176	4.6667	-0.3868	790.5301	786.2896	0.0000	0.0200		
3-5	136.6731	135.8176	4.6667	-0.3768	790.3720	786.4477	0.0000	0.0200		
3-5	137.6731	136.8175	4.6667	-0.3668	790.2139	786.6058	0.0000	0.0200		
3-5	138.6731	137.8175	4.6667	-0.3568	790.0559	786.7638	0.0000	0.0200		
3-5	139.6731	138.8174	4.6667	-0.3468	789.8979	786.9218	0.0000	0.0200		
3-5	140.6731	139.8174	4.6667	-0.3368	789.7399	787.0797	0.0000	0.0200		
3-5	141.6731	140.8173	4.6667	-0.3268	789.5820	787.2377	0.0000	0.0200		
3-5	142.6731	141.8173	4.6667	-0.3168	789.4241	787.3956	0.0000	0.0200		
3-5	143.6731	142.8172	4.6667	-0.3068	789.2662	787.5534	0.0000	0.0200		
3-5	144.6731	143.8172	4.6667	-0.2968	789.1084	787.7113	0.0000	0.0200		
3-5	145.6731	144.8171	4.6667	-0.2868	788.9506	787.8691	0.0000	0.0200		
3-5	146.6731	145.8171	4.6667	-0.2768	788.7928	788.0269	0.0000	0.0200		
3-5	147.6731	146.8170	4.6667	-0.2668	788.6351	788.1846	0.0000	0.0200		

TENDON Main Deck D3-L, Calculations

Segment	Length (ft)	X (ft)	Y (ft)	Z (ft)	Force (kips)	Force after Anchor-Set (kips)	Angle Change (deg)	Force Loss (%)	Containing Element	Additional Info.
3-5	148.6731	147.8170	4.6667	-0.2568	788.4774	788.3423	0.0000	0.0200		
3-5	149.6731	148.8169	4.6667	-0.2468	788.3197	788.3197	0.0000	0.0200		
3-5	150.6731	149.8169	4.6667	-0.2368	788.1620	788.1620	0.0000	0.0200		
3-5	151.6731	150.8168	4.6667	-0.2268	788.0044	788.0044	0.0000	0.0200		
3-5	152.6731	151.8168	4.6667	-0.2168	787.8468	787.8468	0.0000	0.0200		
3-5	153.6731	152.8167	4.6667	-0.2068	787.6893	787.6893	0.0000	0.0200		
3-5	154.6731	153.8167	4.6667	-0.1968	787.5318	787.5318	0.0000	0.0200		
3-5	155.6731	154.8166	4.6667	-0.1868	787.3743	787.3743	0.0000	0.0200		
3-5	156.6731	155.8166	4.6667	-0.1768	787.2168	787.2168	0.0000	0.0200		
3-5	157.6731	156.8165	4.6667	-0.1668	787.0594	787.0594	0.0000	0.0200		
3-5	158.6731	157.8165	4.6667	-0.1568	786.9020	786.9020	0.0000	0.0200		
3-5	159.6731	158.8164	4.6667	-0.1468	786.7446	786.7446	0.0000	0.0200		
3-5	160.6731	159.8164	4.6667	-0.1368	786.5873	786.5873	0.0000	0.0200		
3-5	161.6731	160.8163	4.6667	-0.1268	786.4300	786.4300	0.0000	0.0200		
3-5	162.6731	161.8163	4.6667	-0.1168	786.2727	786.2727	0.0000	0.0200		
3-5	163.6731	162.8162	4.6667	-0.1068	786.1155	786.1155	0.0000	0.0200		
3-5	164.6731	163.8162	4.6667	-0.0968	785.9583	785.9583	0.0000	0.0200		
3-5	165.6731	164.8161	4.6667	-0.0868	785.8011	785.8011	0.0000	0.0200		
3-5	166.6731	165.8161	4.6667	-0.0768	785.6440	785.6440	0.0000	0.0200		
3-5	167.6731	166.8160	4.6667	-0.0668	785.4868	785.4868	0.0000	0.0200		
3-5	168.6731	167.8160	4.6667	-0.0568	785.3298	785.3298	0.0000	0.0200		
3-5	169.6731	168.8159	4.6667	-0.0468	785.1727	785.1727	0.0000	0.0200		
5	170.0275	169.1703	4.6667	-0.0433	781.8823	781.8823	0.9462	0.4191		
5	170.5229	169.6657	4.6667	-0.0465	775.3758	775.3758	1.8924	0.8322		
5	171.0183	170.1607	4.6667	-0.0661	772.1046	772.1046	0.9462	0.4219		
6	171.8438	170.9850	4.6667	-0.1124	771.9771	771.9771	0.0000	0.0165		
6	172.6693	171.8092	4.6667	-0.1586	771.8497	771.8497	0.0000	0.0165		
6	173.3632	172.5019	4.6667	-0.1975	771.7426	771.7426	0.0000	0.0139		

TENDON Main Deck D3-R, Calculations

Segment	Length (ft)	X (ft)	Y (ft)	Z (ft)	Force (kips)	Force after Anchor-Set (kips)	Angle Change (deg)	Force Loss (%)
1	0.0000	-0.8302	-4.6667	-2.0558	834.8804	741.9393	0.0000	0.0000

TENDON Main Deck D3-R, Calculations

Segment	Length (ft)	X (ft)	Y (ft)	Z (ft)	Force (kips)	Force after Anchor-Set (kips)	Angle Change (deg)	Force Loss (%)	Containing Element	Additional Info.
1-3	1.0000	0.1626	-4.6667	-1.9363	834.7134	742.1063	0.0000	0.0200		
1-3	2.0000	1.1554	-4.6667	-1.8168	834.5465	742.2732	0.0000	0.0200		
3	2.0263	1.1815	-4.6667	-1.8136	828.8346	747.9850	1.5728	0.6844		
3	2.8497	2.0014	-4.6667	-1.7377	817.4019	759.4178	3.1456	1.3794		
3	3.6731	2.8242	-4.6667	-1.7069	811.6780	765.1417	1.5728	0.7003		
3-5	4.6731	3.8242	-4.6667	-1.6969	811.5157	765.3040	0.0000	0.0200		
3-5	5.6731	4.8241	-4.6667	-1.6869	811.3534	765.4663	0.0000	0.0200		
3-5	6.6731	5.8241	-4.6667	-1.6769	811.1911	765.6285	0.0000	0.0200		
3-5	7.6731	6.8240	-4.6667	-1.6669	811.0289	765.7908	0.0000	0.0200		
3-5	8.6731	7.8240	-4.6667	-1.6569	810.8667	765.9530	0.0000	0.0200		
3-5	9.6731	8.8239	-4.6667	-1.6469	810.7046	766.1151	0.0000	0.0200		
3-5	10.6731	9.8239	-4.6667	-1.6369	810.5424	766.2772	0.0000	0.0200		
3-5	11.6731	10.8238	-4.6667	-1.6269	810.3804	766.4393	0.0000	0.0200		
3-5	12.6731	11.8238	-4.6667	-1.6169	810.2183	766.6014	0.0000	0.0200		
3-5	13.6731	12.8237	-4.6667	-1.6069	810.0563	766.7634	0.0000	0.0200		
3-5	14.6731	13.8237	-4.6667	-1.5969	809.8943	766.9254	0.0000	0.0200		
3-5	15.6731	14.8236	-4.6667	-1.5869	809.7323	767.0874	0.0000	0.0200		
3-5	16.6731	15.8236	-4.6667	-1.5769	809.5704	767.2493	0.0000	0.0200		
3-5	17.6731	16.8235	-4.6667	-1.5669	809.4085	767.4112	0.0000	0.0200		
3-5	18.6731	17.8235	-4.6667	-1.5569	809.2466	767.5731	0.0000	0.0200		
3-5	19.6731	18.8234	-4.6667	-1.5469	809.0848	767.7349	0.0000	0.0200		
3-5	20.6731	19.8234	-4.6667	-1.5369	808.9230	767.8967	0.0000	0.0200		
3-5	21.6731	20.8233	-4.6667	-1.5269	808.7612	768.0585	0.0000	0.0200		
3-5	22.6731	21.8233	-4.6667	-1.5169	808.5995	768.2202	0.0000	0.0200		
3-5	23.6731	22.8232	-4.6667	-1.5069	808.4378	768.3819	0.0000	0.0200		
3-5	24.6731	23.8232	-4.6667	-1.4969	808.2761	768.5436	0.0000	0.0200		
3-5	25.6731	24.8231	-4.6667	-1.4869	808.1145	768.7052	0.0000	0.0200		
3-5	26.6731	25.8231	-4.6667	-1.4769	807.9529	768.8668	0.0000	0.0200		
3-5	27.6731	26.8230	-4.6667	-1.4669	807.7913	769.0284	0.0000	0.0200		
3-5	28.6731	27.8230	-4.6667	-1.4569	807.6297	769.1899	0.0000	0.0200		
3-5	29.6731	28.8229	-4.6667	-1.4469	807.4682	769.3515	0.0000	0.0200		
3-5	30.6731	29.8229	-4.6667	-1.4369	807.3068	769.5129	0.0000	0.0200		
3-5	31.6731	30.8228	-4.6667	-1.4269	807.1453	769.6744	0.0000	0.0200		
3-5	32.6731	31.8228	-4.6667	-1.4169	806.9839	769.8358	0.0000	0.0200		

TENDON Main Deck D3-R, Calculations

Segment	Length (ft)	X (ft)	Y (ft)	Z (ft)	Force (kips)	Force after Anchor-Set (kips)	Angle Change (deg)	Force Loss (%)	Containing Element	Additional Info.
3-5	33.6731	32.8227	-4.6667	-1.4069	806.8225	769.9972	0.0000	0.0200		
3-5	34.6731	33.8227	-4.6667	-1.3969	806.6612	770.1585	0.0000	0.0200		
3-5	35.6731	34.8226	-4.6667	-1.3869	806.4998	770.3198	0.0000	0.0200		
3-5	36.6731	35.8226	-4.6667	-1.3769	806.3386	770.4811	0.0000	0.0200		
3-5	37.6731	36.8225	-4.6667	-1.3669	806.1773	770.6424	0.0000	0.0200		
3-5	38.6731	37.8225	-4.6667	-1.3569	806.0161	770.8036	0.0000	0.0200		
3-5	39.6731	38.8224	-4.6667	-1.3469	805.8549	770.9648	0.0000	0.0200		
3-5	40.6731	39.8224	-4.6667	-1.3369	805.6938	771.1259	0.0000	0.0200		
3-5	41.6731	40.8223	-4.6667	-1.3269	805.5326	771.2871	0.0000	0.0200		
3-5	42.6731	41.8223	-4.6667	-1.3169	805.3715	771.4481	0.0000	0.0200		
3-5	43.6731	42.8222	-4.6667	-1.3069	805.2105	771.6092	0.0000	0.0200		
3-5	44.6731	43.8222	-4.6667	-1.2969	805.0495	771.7702	0.0000	0.0200		
3-5	45.6731	44.8221	-4.6667	-1.2869	804.8885	771.9312	0.0000	0.0200		
3-5	46.6731	45.8221	-4.6667	-1.2769	804.7275	772.0922	0.0000	0.0200		
3-5	47.6731	46.8220	-4.6667	-1.2669	804.5666	772.2531	0.0000	0.0200		
3-5	48.6731	47.8220	-4.6667	-1.2569	804.4057	772.4140	0.0000	0.0200		
3-5	49.6731	48.8219	-4.6667	-1.2469	804.2448	772.5749	0.0000	0.0200		
3-5	50.6731	49.8219	-4.6667	-1.2369	804.0840	772.7357	0.0000	0.0200		
3-5	51.6731	50.8218	-4.6667	-1.2269	803.9232	772.8965	0.0000	0.0200		
3-5	52.6731	51.8218	-4.6667	-1.2169	803.7624	773.0573	0.0000	0.0200		
3-5	53.6731	52.8217	-4.6667	-1.2069	803.6017	773.2180	0.0000	0.0200		
3-5	54.6731	53.8217	-4.6667	-1.1969	803.4410	773.3787	0.0000	0.0200		
3-5	55.6731	54.8216	-4.6667	-1.1869	803.2803	773.5394	0.0000	0.0200		
3-5	56.6731	55.8216	-4.6667	-1.1769	803.1197	773.7000	0.0000	0.0200		
3-5	57.6731	56.8215	-4.6667	-1.1669	802.9590	773.8606	0.0000	0.0200		
3-5	58.6731	57.8215	-4.6667	-1.1569	802.7985	774.0212	0.0000	0.0200		
3-5	59.6731	58.8214	-4.6667	-1.1469	802.6379	774.1818	0.0000	0.0200		
3-5	60.6731	59.8214	-4.6667	-1.1369	802.4774	774.3423	0.0000	0.0200		
3-5	61.6731	60.8213	-4.6667	-1.1269	802.3169	774.5027	0.0000	0.0200		
3-5	62.6731	61.8213	-4.6667	-1.1169	802.1565	774.6632	0.0000	0.0200		
3-5	63.6731	62.8212	-4.6667	-1.1069	801.9961	774.8236	0.0000	0.0200		
3-5	64.6731	63.8212	-4.6667	-1.0969	801.8357	774.9840	0.0000	0.0200		
3-5	65.6731	64.8211	-4.6667	-1.0869	801.6753	775.1443	0.0000	0.0200		
3-5	66.6731	65.8211	-4.6667	-1.0769	801.5150	775.3047	0.0000	0.0200		

TENDON Main Deck D3-R, Calculations

Segment	Length (ft)	X (ft)	Y (ft)	Z (ft)	Force (kips)	Force after Anchor-Set (kips)	Angle Change (deg)	Force Loss (%)	Containing Element	Additional Info.
3-5	67.6731	66.8210	-4.6667	-1.0669	801.3547	775.4650	0.0000	0.0200		
3-5	68.6731	67.8210	-4.6667	-1.0569	801.1945	775.6252	0.0000	0.0200		
3-5	69.6731	68.8209	-4.6667	-1.0469	801.0343	775.7854	0.0000	0.0200		
3-5	70.6731	69.8209	-4.6667	-1.0369	800.8741	775.9456	0.0000	0.0200		
3-5	71.6731	70.8208	-4.6667	-1.0269	800.7139	776.1058	0.0000	0.0200		
3-5	72.6731	71.8208	-4.6667	-1.0169	800.5538	776.2659	0.0000	0.0200		
3-5	73.6731	72.8207	-4.6667	-1.0069	800.3937	776.4260	0.0000	0.0200		
3-5	74.6731	73.8207	-4.6667	-0.9969	800.2336	776.5861	0.0000	0.0200		
3-5	75.6731	74.8206	-4.6667	-0.9869	800.0736	776.7461	0.0000	0.0200		
3-5	76.6731	75.8206	-4.6667	-0.9769	799.9136	776.9061	0.0000	0.0200		
3-5	77.6731	76.8205	-4.6667	-0.9669	799.7536	777.0661	0.0000	0.0200		
3-5	78.6731	77.8205	-4.6667	-0.9569	799.5937	777.2260	0.0000	0.0200		
3-5	79.6731	78.8204	-4.6667	-0.9469	799.4338	777.3859	0.0000	0.0200		
3-5	80.6731	79.8204	-4.6667	-0.9369	799.2739	777.5458	0.0000	0.0200		
3-5	81.6731	80.8203	-4.6667	-0.9269	799.1141	777.7056	0.0000	0.0200		
3-5	82.6731	81.8203	-4.6667	-0.9169	798.9543	777.8654	0.0000	0.0200		
3-5	83.6731	82.8202	-4.6667	-0.9069	798.7945	778.0252	0.0000	0.0200		
3-5	84.6731	83.8202	-4.6667	-0.8969	798.6348	778.1849	0.0000	0.0200		
3-5	85.6731	84.8201	-4.6667	-0.8869	798.4750	778.3446	0.0000	0.0200		
3-5	86.6731	85.8201	-4.6667	-0.8769	798.3154	778.5043	0.0000	0.0200		
3-5	87.6731	86.8200	-4.6667	-0.8669	798.1557	778.6640	0.0000	0.0200		
3-5	88.6731	87.8200	-4.6667	-0.8569	797.9961	778.8236	0.0000	0.0200		
3-5	89.6731	88.8199	-4.6667	-0.8469	797.8365	778.9832	0.0000	0.0200		
3-5	90.6731	89.8199	-4.6667	-0.8369	797.6770	779.1427	0.0000	0.0200		
3-5	91.6731	90.8198	-4.6667	-0.8269	797.5174	779.3022	0.0000	0.0200		
3-5	92.6731	91.8198	-4.6667	-0.8169	797.3580	779.4617	0.0000	0.0200		
3-5	93.6731	92.8197	-4.6667	-0.8069	797.1985	779.6212	0.0000	0.0200		
3-5	94.6731	93.8197	-4.6667	-0.7969	797.0391	779.7806	0.0000	0.0200		
3-5	95.6731	94.8196	-4.6667	-0.7869	796.8797	779.9400	0.0000	0.0200		
3-5	96.6731	95.8196	-4.6667	-0.7769	796.7203	780.0994	0.0000	0.0200		
3-5	97.6731	96.8195	-4.6667	-0.7669	796.5610	780.2587	0.0000	0.0200		
3-5	98.6731	97.8195	-4.6667	-0.7569	796.4017	780.4180	0.0000	0.0200		
3-5	99.6731	98.8194	-4.6667	-0.7469	796.2424	780.5772	0.0000	0.0200		
3-5	100.6731	99.8194	-4.6667	-0.7369	796.0832	780.7365	0.0000	0.0200		

TENDON Main Deck D3-R, Calculations

Segment	Length (ft)	X (ft)	Y (ft)	Z (ft)	Force (kips)	Force after Anchor-Set (kips)	Angle Change (deg)	Force Loss (%)	Containing Element	Additional Info.
3-5	101.6731	100.8193	-4.6667	-0.7269	795.9240	780.8957	0.0000	0.0200		
3-5	102.6731	101.8193	-4.6667	-0.7169	795.7648	781.0548	0.0000	0.0200		
3-5	103.6731	102.8192	-4.6667	-0.7069	795.6057	781.2140	0.0000	0.0200		
3-5	104.6731	103.8192	-4.6667	-0.6969	795.4466	781.3731	0.0000	0.0200		
3-5	105.6731	104.8191	-4.6667	-0.6869	795.2875	781.5322	0.0000	0.0200		
3-5	106.6731	105.8191	-4.6667	-0.6769	795.1285	781.6912	0.0000	0.0200		
3-5	107.6731	106.8190	-4.6667	-0.6669	794.9695	781.8502	0.0000	0.0200		
3-5	108.6731	107.8190	-4.6667	-0.6569	794.8105	782.0092	0.0000	0.0200		
3-5	109.6731	108.8189	-4.6667	-0.6469	794.6515	782.1681	0.0000	0.0200		
3-5	110.6731	109.8189	-4.6667	-0.6369	794.4926	782.3271	0.0000	0.0200		
3-5	111.6731	110.8188	-4.6667	-0.6269	794.3337	782.4859	0.0000	0.0200		
3-5	112.6731	111.8188	-4.6667	-0.6169	794.1749	782.6448	0.0000	0.0200		
3-5	113.6731	112.8187	-4.6667	-0.6069	794.0161	782.8036	0.0000	0.0200		
3-5	114.6731	113.8187	-4.6667	-0.5969	793.8573	782.9624	0.0000	0.0200		
3-5	115.6731	114.8186	-4.6667	-0.5869	793.6985	783.1211	0.0000	0.0200		
3-5	116.6731	115.8186	-4.6667	-0.5769	793.5398	783.2799	0.0000	0.0200		
3-5	117.6731	116.8185	-4.6667	-0.5669	793.3811	783.4386	0.0000	0.0200		
3-5	118.6731	117.8185	-4.6667	-0.5569	793.2225	783.5972	0.0000	0.0200		
3-5	119.6731	118.8184	-4.6667	-0.5469	793.0638	783.7559	0.0000	0.0200		
3-5	120.6731	119.8184	-4.6667	-0.5369	792.9052	783.9145	0.0000	0.0200		
3-5	121.6731	120.8183	-4.6667	-0.5269	792.7467	784.0730	0.0000	0.0200		
3-5	122.6731	121.8183	-4.6667	-0.5169	792.5881	784.2315	0.0000	0.0200		
3-5	123.6731	122.8182	-4.6667	-0.5069	792.4296	784.3901	0.0000	0.0200		
3-5	124.6731	123.8182	-4.6667	-0.4969	792.2712	784.5485	0.0000	0.0200		
3-5	125.6731	124.8181	-4.6667	-0.4869	792.1127	784.7070	0.0000	0.0200		
3-5	126.6731	125.8181	-4.6667	-0.4769	791.9543	784.8654	0.0000	0.0200		
3-5	127.6731	126.8180	-4.6667	-0.4669	791.7959	785.0237	0.0000	0.0200		
3-5	128.6731	127.8180	-4.6667	-0.4569	791.6376	785.1821	0.0000	0.0200		
3-5	129.6731	128.8179	-4.6667	-0.4469	791.4793	785.3404	0.0000	0.0200		
3-5	130.6731	129.8179	-4.6667	-0.4369	791.3210	785.4987	0.0000	0.0200		
3-5	131.6731	130.8178	-4.6667	-0.4269	791.1628	785.6569	0.0000	0.0200		
3-5	132.6731	131.8178	-4.6667	-0.4169	791.0045	785.8151	0.0000	0.0200		
3-5	133.6731	132.8177	-4.6667	-0.4069	790.8464	785.9733	0.0000	0.0200		
3-5	134.6731	133.8177	-4.6667	-0.3968	790.6882	786.1315	0.0000	0.0200		

TENDON Main Deck D3-R, Calculations

Segment	Length (ft)	X (ft)	Y (ft)	Z (ft)	Force (kips)	Force after Anchor-Set (kips)	Angle Change (deg)	Force Loss (%)	Containing Element	Additional Info.
3-5	135.6731	134.8176	-4.6667	-0.3868	790.5301	786.2896	0.0000	0.0200		
3-5	136.6731	135.8176	-4.6667	-0.3768	790.3720	786.4477	0.0000	0.0200		
3-5	137.6731	136.8175	-4.6667	-0.3668	790.2139	786.6058	0.0000	0.0200		
3-5	138.6731	137.8175	-4.6667	-0.3568	790.0559	786.7638	0.0000	0.0200		
3-5	139.6731	138.8174	-4.6667	-0.3468	789.8979	786.9218	0.0000	0.0200		
3-5	140.6731	139.8174	-4.6667	-0.3368	789.7399	787.0797	0.0000	0.0200		
3-5	141.6731	140.8173	-4.6667	-0.3268	789.5820	787.2377	0.0000	0.0200		
3-5	142.6731	141.8173	-4.6667	-0.3168	789.4241	787.3956	0.0000	0.0200		
3-5	143.6731	142.8172	-4.6667	-0.3068	789.2662	787.5534	0.0000	0.0200		
3-5	144.6731	143.8172	-4.6667	-0.2968	789.1084	787.7113	0.0000	0.0200		
3-5	145.6731	144.8171	-4.6667	-0.2868	788.9506	787.8691	0.0000	0.0200		
3-5	146.6731	145.8171	-4.6667	-0.2768	788.7928	788.0269	0.0000	0.0200		
3-5	147.6731	146.8170	-4.6667	-0.2668	788.6351	788.1846	0.0000	0.0200		
3-5	148.6731	147.8170	-4.6667	-0.2568	788.4774	788.3423	0.0000	0.0200		
3-5	149.6731	148.8169	-4.6667	-0.2468	788.3197	788.3197	0.0000	0.0200		
3-5	150.6731	149.8169	-4.6667	-0.2368	788.1620	788.1620	0.0000	0.0200		
3-5	151.6731	150.8168	-4.6667	-0.2268	788.0044	788.0044	0.0000	0.0200		
3-5	152.6731	151.8168	-4.6667	-0.2168	787.8468	787.8468	0.0000	0.0200		
3-5	153.6731	152.8167	-4.6667	-0.2068	787.6893	787.6893	0.0000	0.0200		
3-5	154.6731	153.8167	-4.6667	-0.1968	787.5318	787.5318	0.0000	0.0200		
3-5	155.6731	154.8166	-4.6667	-0.1868	787.3743	787.3743	0.0000	0.0200		
3-5	156.6731	155.8166	-4.6667	-0.1768	787.2168	787.2168	0.0000	0.0200		
3-5	157.6731	156.8165	-4.6667	-0.1668	787.0594	787.0594	0.0000	0.0200		
3-5	158.6731	157.8165	-4.6667	-0.1568	786.9020	786.9020	0.0000	0.0200		
3-5	159.6731	158.8164	-4.6667	-0.1468	786.7446	786.7446	0.0000	0.0200		
3-5	160.6731	159.8164	-4.6667	-0.1368	786.5873	786.5873	0.0000	0.0200		
3-5	161.6731	160.8163	-4.6667	-0.1268	786.4300	786.4300	0.0000	0.0200		
3-5	162.6731	161.8163	-4.6667	-0.1168	786.2727	786.2727	0.0000	0.0200		
3-5	163.6731	162.8162	-4.6667	-0.1068	786.1155	786.1155	0.0000	0.0200		
3-5	164.6731	163.8162	-4.6667	-0.0968	785.9583	785.9583	0.0000	0.0200		
3-5	165.6731	164.8161	-4.6667	-0.0868	785.8011	785.8011	0.0000	0.0200		
3-5	166.6731	165.8161	-4.6667	-0.0768	785.6440	785.6440	0.0000	0.0200		
3-5	167.6731	166.8160	-4.6667	-0.0668	785.4868	785.4868	0.0000	0.0200		
3-5	168.6731	167.8160	-4.6667	-0.0568	785.3298	785.3298	0.0000	0.0200		

TENDON Main Deck D3-R, Calculations

Segment	Length (ft)	X (ft)	Y (ft)	Z (ft)	Force (kips)	Force after Anchor-Set (kips)	Angle Change (deg)	Force Loss (%)	Containing Element	Additional Info.
3-5	169.6731	168.8159	-4.6667	-0.0468	785.1727	785.1727	0.0000	0.0200		
5	170.0275	169.1703	-4.6667	-0.0433	781.8823	781.8823	0.9462	0.4191		
5	170.5229	169.6657	-4.6667	-0.0465	775.3758	775.3758	1.8924	0.8322		
5	171.0183	170.1607	-4.6667	-0.0661	772.1046	772.1046	0.9462	0.4219		
6	171.8438	170.9850	-4.6667	-0.1124	771.9771	771.9771	0.0000	0.0165		
6	172.6693	171.8092	-4.6667	-0.1586	771.8497	771.8497	0.0000	0.0165		
6	173.3632	172.5019	-4.6667	-0.1975	771.7426	771.7426	0.0000	0.0139		

TENDON Main Deck D4-L, Calculations

Segment	Length (ft)	X (ft)	Y (ft)	Z (ft)	Force (kips)	Force after Anchor-Set (kips)	Angle Change (deg)	Force Loss (%)
1	0.0000	-0.8302	6.1667	-2.0558	834.8804	741.9393	0.0000	0.0000
1-3	1.0000	0.1626	6.1667	-1.9363	834.7134	742.1063	0.0000	0.0200
1-3	2.0000	1.1554	6.1667	-1.8168	834.5465	742.2732	0.0000	0.0200
3	2.0263	1.1815	6.1667	-1.8136	828.8346	747.9850	1.5728	0.6844
3	2.8497	2.0014	6.1667	-1.7377	817.4019	759.4178	3.1456	1.3794
3	3.6731	2.8242	6.1667	-1.7069	811.6780	765.1417	1.5728	0.7003
3-5	4.6731	3.8242	6.1667	-1.6969	811.5157	765.3040	0.0000	0.0200
3-5	5.6731	4.8241	6.1667	-1.6869	811.3534	765.4663	0.0000	0.0200
3-5	6.6731	5.8241	6.1667	-1.6769	811.1911	765.6285	0.0000	0.0200
3-5	7.6731	6.8240	6.1667	-1.6669	811.0289	765.7908	0.0000	0.0200
3-5	8.6731	7.8240	6.1667	-1.6569	810.8667	765.9530	0.0000	0.0200
3-5	9.6731	8.8239	6.1667	-1.6469	810.7046	766.1151	0.0000	0.0200
3-5	10.6731	9.8239	6.1667	-1.6369	810.5424	766.2772	0.0000	0.0200
3-5	11.6731	10.8238	6.1667	-1.6269	810.3804	766.4393	0.0000	0.0200
3-5	12.6731	11.8238	6.1667	-1.6169	810.2183	766.6014	0.0000	0.0200
3-5	13.6731	12.8237	6.1667	-1.6069	810.0563	766.7634	0.0000	0.0200
3-5	14.6731	13.8237	6.1667	-1.5969	809.8943	766.9254	0.0000	0.0200
3-5	15.6731	14.8236	6.1667	-1.5869	809.7323	767.0874	0.0000	0.0200
3-5	16.6731	15.8236	6.1667	-1.5769	809.5704	767.2493	0.0000	0.0200
3-5	17.6731	16.8235	6.1667	-1.5669	809.4085	767.4112	0.0000	0.0200
3-5	18.6731	17.8235	6.1667	-1.5569	809.2466	767.5731	0.0000	0.0200
3-5	19.6731	18.8234	6.1667	-1.5469	809.0848	767.7349	0.0000	0.0200

TENDON Main Deck D4-L, Calculations

Segment	Length (ft)	X (ft)	Y (ft)	Z (ft)	Force (kips)	Force after Anchor-Set (kips)	Angle Change (deg)	Force Loss (%)	Containing Element	Additional Info.
3-5	20.6731	19.8234	6.1667	-1.5369	808.9230	767.8967	0.0000	0.0200		
3-5	21.6731	20.8233	6.1667	-1.5269	808.7612	768.0585	0.0000	0.0200		
3-5	22.6731	21.8233	6.1667	-1.5169	808.5995	768.2202	0.0000	0.0200		
3-5	23.6731	22.8232	6.1667	-1.5069	808.4378	768.3819	0.0000	0.0200		
3-5	24.6731	23.8232	6.1667	-1.4969	808.2761	768.5436	0.0000	0.0200		
3-5	25.6731	24.8231	6.1667	-1.4869	808.1145	768.7052	0.0000	0.0200		
3-5	26.6731	25.8231	6.1667	-1.4769	807.9529	768.8668	0.0000	0.0200		
3-5	27.6731	26.8230	6.1667	-1.4669	807.7913	769.0284	0.0000	0.0200		
3-5	28.6731	27.8230	6.1667	-1.4569	807.6297	769.1899	0.0000	0.0200		
3-5	29.6731	28.8229	6.1667	-1.4469	807.4682	769.3515	0.0000	0.0200		
3-5	30.6731	29.8229	6.1667	-1.4369	807.3068	769.5129	0.0000	0.0200		
3-5	31.6731	30.8228	6.1667	-1.4269	807.1453	769.6744	0.0000	0.0200		
3-5	32.6731	31.8228	6.1667	-1.4169	806.9839	769.8358	0.0000	0.0200		
3-5	33.6731	32.8227	6.1667	-1.4069	806.8225	769.9972	0.0000	0.0200		
3-5	34.6731	33.8227	6.1667	-1.3969	806.6612	770.1585	0.0000	0.0200		
3-5	35.6731	34.8226	6.1667	-1.3869	806.4998	770.3198	0.0000	0.0200		
3-5	36.6731	35.8226	6.1667	-1.3769	806.3386	770.4811	0.0000	0.0200		
3-5	37.6731	36.8225	6.1667	-1.3669	806.1773	770.6424	0.0000	0.0200		
3-5	38.6731	37.8225	6.1667	-1.3569	806.0161	770.8036	0.0000	0.0200		
3-5	39.6731	38.8224	6.1667	-1.3469	805.8549	770.9648	0.0000	0.0200		
3-5	40.6731	39.8224	6.1667	-1.3369	805.6938	771.1259	0.0000	0.0200		
3-5	41.6731	40.8223	6.1667	-1.3269	805.5326	771.2871	0.0000	0.0200		
3-5	42.6731	41.8223	6.1667	-1.3169	805.3715	771.4481	0.0000	0.0200		
3-5	43.6731	42.8222	6.1667	-1.3069	805.2105	771.6092	0.0000	0.0200		
3-5	44.6731	43.8222	6.1667	-1.2969	805.0495	771.7702	0.0000	0.0200		
3-5	45.6731	44.8221	6.1667	-1.2869	804.8885	771.9312	0.0000	0.0200		
3-5	46.6731	45.8221	6.1667	-1.2769	804.7275	772.0922	0.0000	0.0200		
3-5	47.6731	46.8220	6.1667	-1.2669	804.5666	772.2531	0.0000	0.0200		
3-5	48.6731	47.8220	6.1667	-1.2569	804.4057	772.4140	0.0000	0.0200		
3-5	49.6731	48.8219	6.1667	-1.2469	804.2448	772.5749	0.0000	0.0200		
3-5	50.6731	49.8219	6.1667	-1.2369	804.0840	772.7357	0.0000	0.0200		
3-5	51.6731	50.8218	6.1667	-1.2269	803.9232	772.8965	0.0000	0.0200		
3-5	52.6731	51.8218	6.1667	-1.2169	803.7624	773.0573	0.0000	0.0200		
3-5	53.6731	52.8217	6.1667	-1.2069	803.6017	773.2180	0.0000	0.0200		

TENDON Main Deck D4-L, Calculations

Segment	Length (ft)	X (ft)	Y (ft)	Z (ft)	Force (kips)	Force after Anchor-Set (kips)	Angle Change (deg)	Force Loss (%)	Containing Element	Additional Info.
3-5	54.6731	53.8217	6.1667	-1.1969	803.4410	773.3787	0.0000	0.0200		
3-5	55.6731	54.8216	6.1667	-1.1869	803.2803	773.5394	0.0000	0.0200		
3-5	56.6731	55.8216	6.1667	-1.1769	803.1197	773.7000	0.0000	0.0200		
3-5	57.6731	56.8215	6.1667	-1.1669	802.9590	773.8606	0.0000	0.0200		
3-5	58.6731	57.8215	6.1667	-1.1569	802.7985	774.0212	0.0000	0.0200		
3-5	59.6731	58.8214	6.1667	-1.1469	802.6379	774.1818	0.0000	0.0200		
3-5	60.6731	59.8214	6.1667	-1.1369	802.4774	774.3423	0.0000	0.0200		
3-5	61.6731	60.8213	6.1667	-1.1269	802.3169	774.5027	0.0000	0.0200		
3-5	62.6731	61.8213	6.1667	-1.1169	802.1565	774.6632	0.0000	0.0200		
3-5	63.6731	62.8212	6.1667	-1.1069	801.9961	774.8236	0.0000	0.0200		
3-5	64.6731	63.8212	6.1667	-1.0969	801.8357	774.9840	0.0000	0.0200		
3-5	65.6731	64.8211	6.1667	-1.0869	801.6753	775.1443	0.0000	0.0200		
3-5	66.6731	65.8211	6.1667	-1.0769	801.5150	775.3047	0.0000	0.0200		
3-5	67.6731	66.8210	6.1667	-1.0669	801.3547	775.4650	0.0000	0.0200		
3-5	68.6731	67.8210	6.1667	-1.0569	801.1945	775.6252	0.0000	0.0200		
3-5	69.6731	68.8209	6.1667	-1.0469	801.0343	775.7854	0.0000	0.0200		
3-5	70.6731	69.8209	6.1667	-1.0369	800.8741	775.9456	0.0000	0.0200		
3-5	71.6731	70.8208	6.1667	-1.0269	800.7139	776.1058	0.0000	0.0200		
3-5	72.6731	71.8208	6.1667	-1.0169	800.5538	776.2659	0.0000	0.0200		
3-5	73.6731	72.8207	6.1667	-1.0069	800.3937	776.4260	0.0000	0.0200		
3-5	74.6731	73.8207	6.1667	-0.9969	800.2336	776.5861	0.0000	0.0200		
3-5	75.6731	74.8206	6.1667	-0.9869	800.0736	776.7461	0.0000	0.0200		
3-5	76.6731	75.8206	6.1667	-0.9769	799.9136	776.9061	0.0000	0.0200		
3-5	77.6731	76.8205	6.1667	-0.9669	799.7536	777.0661	0.0000	0.0200		
3-5	78.6731	77.8205	6.1667	-0.9569	799.5937	777.2260	0.0000	0.0200		
3-5	79.6731	78.8204	6.1667	-0.9469	799.4338	777.3859	0.0000	0.0200		
3-5	80.6731	79.8204	6.1667	-0.9369	799.2739	777.5458	0.0000	0.0200		
3-5	81.6731	80.8203	6.1667	-0.9269	799.1141	777.7056	0.0000	0.0200		
3-5	82.6731	81.8203	6.1667	-0.9169	798.9543	777.8654	0.0000	0.0200		
3-5	83.6731	82.8202	6.1667	-0.9069	798.7945	778.0252	0.0000	0.0200		
3-5	84.6731	83.8202	6.1667	-0.8969	798.6348	778.1849	0.0000	0.0200		
3-5	85.6731	84.8201	6.1667	-0.8869	798.4750	778.3446	0.0000	0.0200		
3-5	86.6731	85.8201	6.1667	-0.8769	798.3154	778.5043	0.0000	0.0200		
3-5	87.6731	86.8200	6.1667	-0.8669	798.1557	778.6640	0.0000	0.0200		

TENDON Main Deck D4-L, Calculations

Segment	Length (ft)	X (ft)	Y (ft)	Z (ft)	Force (kips)	Force after Anchor-Set (kips)	Angle Change (deg)	Force Loss (%)	Containing Element	Additional Info.
3-5	88.6731	87.8200	6.1667	-0.8569	797.9961	778.8236	0.0000	0.0200		
3-5	89.6731	88.8199	6.1667	-0.8469	797.8365	778.9832	0.0000	0.0200		
3-5	90.6731	89.8199	6.1667	-0.8369	797.6770	779.1427	0.0000	0.0200		
3-5	91.6731	90.8198	6.1667	-0.8269	797.5174	779.3022	0.0000	0.0200		
3-5	92.6731	91.8198	6.1667	-0.8169	797.3580	779.4617	0.0000	0.0200		
3-5	93.6731	92.8197	6.1667	-0.8069	797.1985	779.6212	0.0000	0.0200		
3-5	94.6731	93.8197	6.1667	-0.7969	797.0391	779.7806	0.0000	0.0200		
3-5	95.6731	94.8196	6.1667	-0.7869	796.8797	779.9400	0.0000	0.0200		
3-5	96.6731	95.8196	6.1667	-0.7769	796.7203	780.0994	0.0000	0.0200		
3-5	97.6731	96.8195	6.1667	-0.7669	796.5610	780.2587	0.0000	0.0200		
3-5	98.6731	97.8195	6.1667	-0.7569	796.4017	780.4180	0.0000	0.0200		
3-5	99.6731	98.8194	6.1667	-0.7469	796.2424	780.5772	0.0000	0.0200		
3-5	100.6731	99.8194	6.1667	-0.7369	796.0832	780.7365	0.0000	0.0200		
3-5	101.6731	100.8193	6.1667	-0.7269	795.9240	780.8957	0.0000	0.0200		
3-5	102.6731	101.8193	6.1667	-0.7169	795.7648	781.0548	0.0000	0.0200		
3-5	103.6731	102.8192	6.1667	-0.7069	795.6057	781.2140	0.0000	0.0200		
3-5	104.6731	103.8192	6.1667	-0.6969	795.4466	781.3731	0.0000	0.0200		
3-5	105.6731	104.8191	6.1667	-0.6869	795.2875	781.5322	0.0000	0.0200		
3-5	106.6731	105.8191	6.1667	-0.6769	795.1285	781.6912	0.0000	0.0200		
3-5	107.6731	106.8190	6.1667	-0.6669	794.9695	781.8502	0.0000	0.0200		
3-5	108.6731	107.8190	6.1667	-0.6569	794.8105	782.0092	0.0000	0.0200		
3-5	109.6731	108.8189	6.1667	-0.6469	794.6515	782.1681	0.0000	0.0200		
3-5	110.6731	109.8189	6.1667	-0.6369	794.4926	782.3271	0.0000	0.0200		
3-5	111.6731	110.8188	6.1667	-0.6269	794.3337	782.4859	0.0000	0.0200		
3-5	112.6731	111.8188	6.1667	-0.6169	794.1749	782.6448	0.0000	0.0200		
3-5	113.6731	112.8187	6.1667	-0.6069	794.0161	782.8036	0.0000	0.0200		
3-5	114.6731	113.8187	6.1667	-0.5969	793.8573	782.9624	0.0000	0.0200		
3-5	115.6731	114.8186	6.1667	-0.5869	793.6985	783.1211	0.0000	0.0200		
3-5	116.6731	115.8186	6.1667	-0.5769	793.5398	783.2799	0.0000	0.0200		
3-5	117.6731	116.8185	6.1667	-0.5669	793.3811	783.4386	0.0000	0.0200		
3-5	118.6731	117.8185	6.1667	-0.5569	793.2225	783.5972	0.0000	0.0200		
3-5	119.6731	118.8184	6.1667	-0.5469	793.0638	783.7559	0.0000	0.0200		
3-5	120.6731	119.8184	6.1667	-0.5369	792.9052	783.9145	0.0000	0.0200		
3-5	121.6731	120.8183	6.1667	-0.5269	792.7467	784.0730	0.0000	0.0200		

TENDON Main Deck D4-L, Calculations

Segment	Length (ft)	X (ft)	Y (ft)	Z (ft)	Force (kips)	Force after Anchor-Set (kips)	Angle Change (deg)	Force Loss (%)	Containing Element	Additional Info.
3-5	122.6731	121.8183	6.1667	-0.5169	792.5881	784.2315	0.0000	0.0200		
3-5	123.6731	122.8182	6.1667	-0.5069	792.4296	784.3901	0.0000	0.0200		
3-5	124.6731	123.8182	6.1667	-0.4969	792.2712	784.5485	0.0000	0.0200		
3-5	125.6731	124.8181	6.1667	-0.4869	792.1127	784.7070	0.0000	0.0200		
3-5	126.6731	125.8181	6.1667	-0.4769	791.9543	784.8654	0.0000	0.0200		
3-5	127.6731	126.8180	6.1667	-0.4669	791.7959	785.0237	0.0000	0.0200		
3-5	128.6731	127.8180	6.1667	-0.4569	791.6376	785.1821	0.0000	0.0200		
3-5	129.6731	128.8179	6.1667	-0.4469	791.4793	785.3404	0.0000	0.0200		
3-5	130.6731	129.8179	6.1667	-0.4369	791.3210	785.4987	0.0000	0.0200		
3-5	131.6731	130.8178	6.1667	-0.4269	791.1628	785.6569	0.0000	0.0200		
3-5	132.6731	131.8178	6.1667	-0.4169	791.0045	785.8151	0.0000	0.0200		
3-5	133.6731	132.8177	6.1667	-0.4069	790.8464	785.9733	0.0000	0.0200		
3-5	134.6731	133.8177	6.1667	-0.3968	790.6882	786.1315	0.0000	0.0200		
3-5	135.6731	134.8176	6.1667	-0.3868	790.5301	786.2896	0.0000	0.0200		
3-5	136.6731	135.8176	6.1667	-0.3768	790.3720	786.4477	0.0000	0.0200		
3-5	137.6731	136.8175	6.1667	-0.3668	790.2139	786.6058	0.0000	0.0200		
3-5	138.6731	137.8175	6.1667	-0.3568	790.0559	786.7638	0.0000	0.0200		
3-5	139.6731	138.8174	6.1667	-0.3468	789.8979	786.9218	0.0000	0.0200		
3-5	140.6731	139.8174	6.1667	-0.3368	789.7399	787.0797	0.0000	0.0200		
3-5	141.6731	140.8173	6.1667	-0.3268	789.5820	787.2377	0.0000	0.0200		
3-5	142.6731	141.8173	6.1667	-0.3168	789.4241	787.3956	0.0000	0.0200		
3-5	143.6731	142.8172	6.1667	-0.3068	789.2662	787.5534	0.0000	0.0200		
3-5	144.6731	143.8172	6.1667	-0.2968	789.1084	787.7113	0.0000	0.0200		
3-5	145.6731	144.8171	6.1667	-0.2868	788.9506	787.8691	0.0000	0.0200		
3-5	146.6731	145.8171	6.1667	-0.2768	788.7928	788.0269	0.0000	0.0200		
3-5	147.6731	146.8170	6.1667	-0.2668	788.6351	788.1846	0.0000	0.0200		
3-5	148.6731	147.8170	6.1667	-0.2568	788.4774	788.3423	0.0000	0.0200		
3-5	149.6731	148.8169	6.1667	-0.2468	788.3197	788.3197	0.0000	0.0200		
3-5	150.6731	149.8169	6.1667	-0.2368	788.1620	788.1620	0.0000	0.0200		
3-5	151.6731	150.8168	6.1667	-0.2268	788.0044	788.0044	0.0000	0.0200		
3-5	152.6731	151.8168	6.1667	-0.2168	787.8468	787.8468	0.0000	0.0200		
3-5	153.6731	152.8167	6.1667	-0.2068	787.6893	787.6893	0.0000	0.0200		
3-5	154.6731	153.8167	6.1667	-0.1968	787.5318	787.5318	0.0000	0.0200		
3-5	155.6731	154.8166	6.1667	-0.1868	787.3743	787.3743	0.0000	0.0200		

TENDON Main Deck D4-L, Calculations

Segment	Length (ft)	X (ft)	Y (ft)	Z (ft)	Force (kips)	Force after Anchor-Set (kips)	Angle Change (deg)	Force Loss (%)	Containing Element	Additional Info.
3-5	156.6731	155.8166	6.1667	-0.1768	787.2168	787.2168	0.0000	0.0200		
3-5	157.6731	156.8165	6.1667	-0.1668	787.0594	787.0594	0.0000	0.0200		
3-5	158.6731	157.8165	6.1667	-0.1568	786.9020	786.9020	0.0000	0.0200		
3-5	159.6731	158.8164	6.1667	-0.1468	786.7446	786.7446	0.0000	0.0200		
3-5	160.6731	159.8164	6.1667	-0.1368	786.5873	786.5873	0.0000	0.0200		
3-5	161.6731	160.8163	6.1667	-0.1268	786.4300	786.4300	0.0000	0.0200		
3-5	162.6731	161.8163	6.1667	-0.1168	786.2727	786.2727	0.0000	0.0200		
3-5	163.6731	162.8162	6.1667	-0.1068	786.1155	786.1155	0.0000	0.0200		
3-5	164.6731	163.8162	6.1667	-0.0968	785.9583	785.9583	0.0000	0.0200		
3-5	165.6731	164.8161	6.1667	-0.0868	785.8011	785.8011	0.0000	0.0200		
3-5	166.6731	165.8161	6.1667	-0.0768	785.6440	785.6440	0.0000	0.0200		
3-5	167.6731	166.8160	6.1667	-0.0668	785.4868	785.4868	0.0000	0.0200		
3-5	168.6731	167.8160	6.1667	-0.0568	785.3298	785.3298	0.0000	0.0200		
3-5	169.6731	168.8159	6.1667	-0.0468	785.1727	785.1727	0.0000	0.0200		
5	170.0275	169.1703	6.1667	-0.0433	781.8823	781.8823	0.9462	0.4191		
5	170.5229	169.6657	6.1667	-0.0465	775.3758	775.3758	1.8924	0.8322		
5	171.0183	170.1607	6.1667	-0.0661	772.1046	772.1046	0.9462	0.4219		
6	171.8438	170.9850	6.1667	-0.1124	771.9771	771.9771	0.0000	0.0165		
6	172.6693	171.8092	6.1667	-0.1586	771.8497	771.8497	0.0000	0.0165		
6	173.3632	172.5019	6.1667	-0.1975	771.7426	771.7426	0.0000	0.0139		

TENDON Main Deck D4-R, Calculations

Segment	Length (ft)	X (ft)	Y (ft)	Z (ft)	Force (kips)	Force after Anchor-Set (kips)	Angle Change (deg)	Force Loss (%)
1	0.0000	-0.8302	-6.1667	-2.0558	834.8804	741.9393	0.0000	0.0000
1-3	1.0000	0.1626	-6.1667	-1.9363	834.7134	742.1063	0.0000	0.0200
1-3	2.0000	1.1554	-6.1667	-1.8168	834.5465	742.2732	0.0000	0.0200
3	2.0263	1.1815	-6.1667	-1.8136	828.8346	747.9850	1.5728	0.6844
3	2.8497	2.0014	-6.1667	-1.7377	817.4019	759.4178	3.1456	1.3794
3	3.6731	2.8242	-6.1667	-1.7069	811.6780	765.1417	1.5728	0.7003
3-5	4.6731	3.8242	-6.1667	-1.6969	811.5157	765.3040	0.0000	0.0200
3-5	5.6731	4.8241	-6.1667	-1.6869	811.3534	765.4663	0.0000	0.0200
3-5	6.6731	5.8241	-6.1667	-1.6769	811.1911	765.6285	0.0000	0.0200

TENDON Main Deck D4-R, Calculations

Segment	Length (ft)	X (ft)	Y (ft)	Z (ft)	Force (kips)	Force after Anchor-Set (kips)	Angle Change (deg)	Force Loss (%)	Containing Element	Additional Info.
3-5	7.6731	6.8240	-6.1667	-1.6669	811.0289	765.7908	0.0000	0.0200		
3-5	8.6731	7.8240	-6.1667	-1.6569	810.8667	765.9530	0.0000	0.0200		
3-5	9.6731	8.8239	-6.1667	-1.6469	810.7046	766.1151	0.0000	0.0200		
3-5	10.6731	9.8239	-6.1667	-1.6369	810.5424	766.2772	0.0000	0.0200		
3-5	11.6731	10.8238	-6.1667	-1.6269	810.3804	766.4393	0.0000	0.0200		
3-5	12.6731	11.8238	-6.1667	-1.6169	810.2183	766.6014	0.0000	0.0200		
3-5	13.6731	12.8237	-6.1667	-1.6069	810.0563	766.7634	0.0000	0.0200		
3-5	14.6731	13.8237	-6.1667	-1.5969	809.8943	766.9254	0.0000	0.0200		
3-5	15.6731	14.8236	-6.1667	-1.5869	809.7323	767.0874	0.0000	0.0200		
3-5	16.6731	15.8236	-6.1667	-1.5769	809.5704	767.2493	0.0000	0.0200		
3-5	17.6731	16.8235	-6.1667	-1.5669	809.4085	767.4112	0.0000	0.0200		
3-5	18.6731	17.8235	-6.1667	-1.5569	809.2466	767.5731	0.0000	0.0200		
3-5	19.6731	18.8234	-6.1667	-1.5469	809.0848	767.7349	0.0000	0.0200		
3-5	20.6731	19.8234	-6.1667	-1.5369	808.9230	767.8967	0.0000	0.0200		
3-5	21.6731	20.8233	-6.1667	-1.5269	808.7612	768.0585	0.0000	0.0200		
3-5	22.6731	21.8233	-6.1667	-1.5169	808.5995	768.2202	0.0000	0.0200		
3-5	23.6731	22.8232	-6.1667	-1.5069	808.4378	768.3819	0.0000	0.0200		
3-5	24.6731	23.8232	-6.1667	-1.4969	808.2761	768.5436	0.0000	0.0200		
3-5	25.6731	24.8231	-6.1667	-1.4869	808.1145	768.7052	0.0000	0.0200		
3-5	26.6731	25.8231	-6.1667	-1.4769	807.9529	768.8668	0.0000	0.0200		
3-5	27.6731	26.8230	-6.1667	-1.4669	807.7913	769.0284	0.0000	0.0200		
3-5	28.6731	27.8230	-6.1667	-1.4569	807.6297	769.1899	0.0000	0.0200		
3-5	29.6731	28.8229	-6.1667	-1.4469	807.4682	769.3515	0.0000	0.0200		
3-5	30.6731	29.8229	-6.1667	-1.4369	807.3068	769.5129	0.0000	0.0200		
3-5	31.6731	30.8228	-6.1667	-1.4269	807.1453	769.6744	0.0000	0.0200		
3-5	32.6731	31.8228	-6.1667	-1.4169	806.9839	769.8358	0.0000	0.0200		
3-5	33.6731	32.8227	-6.1667	-1.4069	806.8225	769.9972	0.0000	0.0200		
3-5	34.6731	33.8227	-6.1667	-1.3969	806.6612	770.1585	0.0000	0.0200		
3-5	35.6731	34.8226	-6.1667	-1.3869	806.4998	770.3198	0.0000	0.0200		
3-5	36.6731	35.8226	-6.1667	-1.3769	806.3386	770.4811	0.0000	0.0200		
3-5	37.6731	36.8225	-6.1667	-1.3669	806.1773	770.6424	0.0000	0.0200		
3-5	38.6731	37.8225	-6.1667	-1.3569	806.0161	770.8036	0.0000	0.0200		
3-5	39.6731	38.8224	-6.1667	-1.3469	805.8549	770.9648	0.0000	0.0200		
3-5	40.6731	39.8224	-6.1667	-1.3369	805.6938	771.1259	0.0000	0.0200		

TENDON Main Deck D4-R, Calculations

Segment	Length (ft)	X (ft)	Y (ft)	Z (ft)	Force (kips)	Force after Anchor-Set (kips)	Angle Change (deg)	Force Loss (%)	Containing Element	Additional Info.
3-5	41.6731	40.8223	-6.1667	-1.3269	805.5326	771.2871	0.0000	0.0200		
3-5	42.6731	41.8223	-6.1667	-1.3169	805.3715	771.4481	0.0000	0.0200		
3-5	43.6731	42.8222	-6.1667	-1.3069	805.2105	771.6092	0.0000	0.0200		
3-5	44.6731	43.8222	-6.1667	-1.2969	805.0495	771.7702	0.0000	0.0200		
3-5	45.6731	44.8221	-6.1667	-1.2869	804.8885	771.9312	0.0000	0.0200		
3-5	46.6731	45.8221	-6.1667	-1.2769	804.7275	772.0922	0.0000	0.0200		
3-5	47.6731	46.8220	-6.1667	-1.2669	804.5666	772.2531	0.0000	0.0200		
3-5	48.6731	47.8220	-6.1667	-1.2569	804.4057	772.4140	0.0000	0.0200		
3-5	49.6731	48.8219	-6.1667	-1.2469	804.2448	772.5749	0.0000	0.0200		
3-5	50.6731	49.8219	-6.1667	-1.2369	804.0840	772.7357	0.0000	0.0200		
3-5	51.6731	50.8218	-6.1667	-1.2269	803.9232	772.8965	0.0000	0.0200		
3-5	52.6731	51.8218	-6.1667	-1.2169	803.7624	773.0573	0.0000	0.0200		
3-5	53.6731	52.8217	-6.1667	-1.2069	803.6017	773.2180	0.0000	0.0200		
3-5	54.6731	53.8217	-6.1667	-1.1969	803.4410	773.3787	0.0000	0.0200		
3-5	55.6731	54.8216	-6.1667	-1.1869	803.2803	773.5394	0.0000	0.0200		
3-5	56.6731	55.8216	-6.1667	-1.1769	803.1197	773.7000	0.0000	0.0200		
3-5	57.6731	56.8215	-6.1667	-1.1669	802.9590	773.8606	0.0000	0.0200		
3-5	58.6731	57.8215	-6.1667	-1.1569	802.7985	774.0212	0.0000	0.0200		
3-5	59.6731	58.8214	-6.1667	-1.1469	802.6379	774.1818	0.0000	0.0200		
3-5	60.6731	59.8214	-6.1667	-1.1369	802.4774	774.3423	0.0000	0.0200		
3-5	61.6731	60.8213	-6.1667	-1.1269	802.3169	774.5027	0.0000	0.0200		
3-5	62.6731	61.8213	-6.1667	-1.1169	802.1565	774.6632	0.0000	0.0200		
3-5	63.6731	62.8212	-6.1667	-1.1069	801.9961	774.8236	0.0000	0.0200		
3-5	64.6731	63.8212	-6.1667	-1.0969	801.8357	774.9840	0.0000	0.0200		
3-5	65.6731	64.8211	-6.1667	-1.0869	801.6753	775.1443	0.0000	0.0200		
3-5	66.6731	65.8211	-6.1667	-1.0769	801.5150	775.3047	0.0000	0.0200		
3-5	67.6731	66.8210	-6.1667	-1.0669	801.3547	775.4650	0.0000	0.0200		
3-5	68.6731	67.8210	-6.1667	-1.0569	801.1945	775.6252	0.0000	0.0200		
3-5	69.6731	68.8209	-6.1667	-1.0469	801.0343	775.7854	0.0000	0.0200		
3-5	70.6731	69.8209	-6.1667	-1.0369	800.8741	775.9456	0.0000	0.0200		
3-5	71.6731	70.8208	-6.1667	-1.0269	800.7139	776.1058	0.0000	0.0200		
3-5	72.6731	71.8208	-6.1667	-1.0169	800.5538	776.2659	0.0000	0.0200		
3-5	73.6731	72.8207	-6.1667	-1.0069	800.3937	776.4260	0.0000	0.0200		
3-5	74.6731	73.8207	-6.1667	-0.9969	800.2336	776.5861	0.0000	0.0200		

TENDON Main Deck D4-R, Calculations

Segment	Length (ft)	X (ft)	Y (ft)	Z (ft)	Force (kips)	Force after Anchor-Set (kips)	Angle Change (deg)	Force Loss (%)	Containing Element	Additional Info.
3-5	75.6731	74.8206	-6.1667	-0.9869	800.0736	776.7461	0.0000	0.0200		
3-5	76.6731	75.8206	-6.1667	-0.9769	799.9136	776.9061	0.0000	0.0200		
3-5	77.6731	76.8205	-6.1667	-0.9669	799.7536	777.0661	0.0000	0.0200		
3-5	78.6731	77.8205	-6.1667	-0.9569	799.5937	777.2260	0.0000	0.0200		
3-5	79.6731	78.8204	-6.1667	-0.9469	799.4338	777.3859	0.0000	0.0200		
3-5	80.6731	79.8204	-6.1667	-0.9369	799.2739	777.5458	0.0000	0.0200		
3-5	81.6731	80.8203	-6.1667	-0.9269	799.1141	777.7056	0.0000	0.0200		
3-5	82.6731	81.8203	-6.1667	-0.9169	798.9543	777.8654	0.0000	0.0200		
3-5	83.6731	82.8202	-6.1667	-0.9069	798.7945	778.0252	0.0000	0.0200		
3-5	84.6731	83.8202	-6.1667	-0.8969	798.6348	778.1849	0.0000	0.0200		
3-5	85.6731	84.8201	-6.1667	-0.8869	798.4750	778.3446	0.0000	0.0200		
3-5	86.6731	85.8201	-6.1667	-0.8769	798.3154	778.5043	0.0000	0.0200		
3-5	87.6731	86.8200	-6.1667	-0.8669	798.1557	778.6640	0.0000	0.0200		
3-5	88.6731	87.8200	-6.1667	-0.8569	797.9961	778.8236	0.0000	0.0200		
3-5	89.6731	88.8199	-6.1667	-0.8469	797.8365	778.9832	0.0000	0.0200		
3-5	90.6731	89.8199	-6.1667	-0.8369	797.6770	779.1427	0.0000	0.0200		
3-5	91.6731	90.8198	-6.1667	-0.8269	797.5174	779.3022	0.0000	0.0200		
3-5	92.6731	91.8198	-6.1667	-0.8169	797.3580	779.4617	0.0000	0.0200		
3-5	93.6731	92.8197	-6.1667	-0.8069	797.1985	779.6212	0.0000	0.0200		
3-5	94.6731	93.8197	-6.1667	-0.7969	797.0391	779.7806	0.0000	0.0200		
3-5	95.6731	94.8196	-6.1667	-0.7869	796.8797	779.9400	0.0000	0.0200		
3-5	96.6731	95.8196	-6.1667	-0.7769	796.7203	780.0994	0.0000	0.0200		
3-5	97.6731	96.8195	-6.1667	-0.7669	796.5610	780.2587	0.0000	0.0200		
3-5	98.6731	97.8195	-6.1667	-0.7569	796.4017	780.4180	0.0000	0.0200		
3-5	99.6731	98.8194	-6.1667	-0.7469	796.2424	780.5772	0.0000	0.0200		
3-5	100.6731	99.8194	-6.1667	-0.7369	796.0832	780.7365	0.0000	0.0200		
3-5	101.6731	100.8193	-6.1667	-0.7269	795.9240	780.8957	0.0000	0.0200		
3-5	102.6731	101.8193	-6.1667	-0.7169	795.7648	781.0548	0.0000	0.0200		
3-5	103.6731	102.8192	-6.1667	-0.7069	795.6057	781.2140	0.0000	0.0200		
3-5	104.6731	103.8192	-6.1667	-0.6969	795.4466	781.3731	0.0000	0.0200		
3-5	105.6731	104.8191	-6.1667	-0.6869	795.2875	781.5322	0.0000	0.0200		
3-5	106.6731	105.8191	-6.1667	-0.6769	795.1285	781.6912	0.0000	0.0200		
3-5	107.6731	106.8190	-6.1667	-0.6669	794.9695	781.8502	0.0000	0.0200		
3-5	108.6731	107.8190	-6.1667	-0.6569	794.8105	782.0092	0.0000	0.0200		

TENDON Main Deck D4-R, Calculations

Segment	Length (ft)	X (ft)	Y (ft)	Z (ft)	Force (kips)	Force after Anchor-Set (kips)	Angle Change (deg)	Force Loss (%)	Containing Element	Additional Info.
3-5	109.6731	108.8189	-6.1667	-0.6469	794.6515	782.1681	0.0000	0.0200		
3-5	110.6731	109.8189	-6.1667	-0.6369	794.4926	782.3271	0.0000	0.0200		
3-5	111.6731	110.8188	-6.1667	-0.6269	794.3337	782.4859	0.0000	0.0200		
3-5	112.6731	111.8188	-6.1667	-0.6169	794.1749	782.6448	0.0000	0.0200		
3-5	113.6731	112.8187	-6.1667	-0.6069	794.0161	782.8036	0.0000	0.0200		
3-5	114.6731	113.8187	-6.1667	-0.5969	793.8573	782.9624	0.0000	0.0200		
3-5	115.6731	114.8186	-6.1667	-0.5869	793.6985	783.1211	0.0000	0.0200		
3-5	116.6731	115.8186	-6.1667	-0.5769	793.5398	783.2799	0.0000	0.0200		
3-5	117.6731	116.8185	-6.1667	-0.5669	793.3811	783.4386	0.0000	0.0200		
3-5	118.6731	117.8185	-6.1667	-0.5569	793.2225	783.5972	0.0000	0.0200		
3-5	119.6731	118.8184	-6.1667	-0.5469	793.0638	783.7559	0.0000	0.0200		
3-5	120.6731	119.8184	-6.1667	-0.5369	792.9052	783.9145	0.0000	0.0200		
3-5	121.6731	120.8183	-6.1667	-0.5269	792.7467	784.0730	0.0000	0.0200		
3-5	122.6731	121.8183	-6.1667	-0.5169	792.5881	784.2315	0.0000	0.0200		
3-5	123.6731	122.8182	-6.1667	-0.5069	792.4296	784.3901	0.0000	0.0200		
3-5	124.6731	123.8182	-6.1667	-0.4969	792.2712	784.5485	0.0000	0.0200		
3-5	125.6731	124.8181	-6.1667	-0.4869	792.1127	784.7070	0.0000	0.0200		
3-5	126.6731	125.8181	-6.1667	-0.4769	791.9543	784.8654	0.0000	0.0200		
3-5	127.6731	126.8180	-6.1667	-0.4669	791.7959	785.0237	0.0000	0.0200		
3-5	128.6731	127.8180	-6.1667	-0.4569	791.6376	785.1821	0.0000	0.0200		
3-5	129.6731	128.8179	-6.1667	-0.4469	791.4793	785.3404	0.0000	0.0200		
3-5	130.6731	129.8179	-6.1667	-0.4369	791.3210	785.4987	0.0000	0.0200		
3-5	131.6731	130.8178	-6.1667	-0.4269	791.1628	785.6569	0.0000	0.0200		
3-5	132.6731	131.8178	-6.1667	-0.4169	791.0045	785.8151	0.0000	0.0200		
3-5	133.6731	132.8177	-6.1667	-0.4069	790.8464	785.9733	0.0000	0.0200		
3-5	134.6731	133.8177	-6.1667	-0.3968	790.6882	786.1315	0.0000	0.0200		
3-5	135.6731	134.8176	-6.1667	-0.3868	790.5301	786.2896	0.0000	0.0200		
3-5	136.6731	135.8176	-6.1667	-0.3768	790.3720	786.4477	0.0000	0.0200		
3-5	137.6731	136.8175	-6.1667	-0.3668	790.2139	786.6058	0.0000	0.0200		
3-5	138.6731	137.8175	-6.1667	-0.3568	790.0559	786.7638	0.0000	0.0200		
3-5	139.6731	138.8174	-6.1667	-0.3468	789.8979	786.9218	0.0000	0.0200		
3-5	140.6731	139.8174	-6.1667	-0.3368	789.7399	787.0797	0.0000	0.0200		
3-5	141.6731	140.8173	-6.1667	-0.3268	789.5820	787.2377	0.0000	0.0200		
3-5	142.6731	141.8173	-6.1667	-0.3168	789.4241	787.3956	0.0000	0.0200		

TENDON Main Deck D4-R, Calculations

Segment	Length (ft)	X (ft)	Y (ft)	Z (ft)	Force (kips)	Force after Anchor-Set (kips)	Angle Change (deg)	Force Loss (%)	Containing Element	Additional Info.
3-5	143.6731	142.8172	-6.1667	-0.3068	789.2662	787.5534	0.0000	0.0200		
3-5	144.6731	143.8172	-6.1667	-0.2968	789.1084	787.7113	0.0000	0.0200		
3-5	145.6731	144.8171	-6.1667	-0.2868	788.9506	787.8691	0.0000	0.0200		
3-5	146.6731	145.8171	-6.1667	-0.2768	788.7928	788.0269	0.0000	0.0200		
3-5	147.6731	146.8170	-6.1667	-0.2668	788.6351	788.1846	0.0000	0.0200		
3-5	148.6731	147.8170	-6.1667	-0.2568	788.4774	788.3423	0.0000	0.0200		
3-5	149.6731	148.8169	-6.1667	-0.2468	788.3197	788.3197	0.0000	0.0200		
3-5	150.6731	149.8169	-6.1667	-0.2368	788.1620	788.1620	0.0000	0.0200		
3-5	151.6731	150.8168	-6.1667	-0.2268	788.0044	788.0044	0.0000	0.0200		
3-5	152.6731	151.8168	-6.1667	-0.2168	787.8468	787.8468	0.0000	0.0200		
3-5	153.6731	152.8167	-6.1667	-0.2068	787.6893	787.6893	0.0000	0.0200		
3-5	154.6731	153.8167	-6.1667	-0.1968	787.5318	787.5318	0.0000	0.0200		
3-5	155.6731	154.8166	-6.1667	-0.1868	787.3743	787.3743	0.0000	0.0200		
3-5	156.6731	155.8166	-6.1667	-0.1768	787.2168	787.2168	0.0000	0.0200		
3-5	157.6731	156.8165	-6.1667	-0.1668	787.0594	787.0594	0.0000	0.0200		
3-5	158.6731	157.8165	-6.1667	-0.1568	786.9020	786.9020	0.0000	0.0200		
3-5	159.6731	158.8164	-6.1667	-0.1468	786.7446	786.7446	0.0000	0.0200		
3-5	160.6731	159.8164	-6.1667	-0.1368	786.5873	786.5873	0.0000	0.0200		
3-5	161.6731	160.8163	-6.1667	-0.1268	786.4300	786.4300	0.0000	0.0200		
3-5	162.6731	161.8163	-6.1667	-0.1168	786.2727	786.2727	0.0000	0.0200		
3-5	163.6731	162.8162	-6.1667	-0.1068	786.1155	786.1155	0.0000	0.0200		
3-5	164.6731	163.8162	-6.1667	-0.0968	785.9583	785.9583	0.0000	0.0200		
3-5	165.6731	164.8161	-6.1667	-0.0868	785.8011	785.8011	0.0000	0.0200		
3-5	166.6731	165.8161	-6.1667	-0.0768	785.6440	785.6440	0.0000	0.0200		
3-5	167.6731	166.8160	-6.1667	-0.0668	785.4868	785.4868	0.0000	0.0200		
3-5	168.6731	167.8160	-6.1667	-0.0568	785.3298	785.3298	0.0000	0.0200		
3-5	169.6731	168.8159	-6.1667	-0.0468	785.1727	785.1727	0.0000	0.0200		
5	170.0275	169.1703	-6.1667	-0.0433	781.8823	781.8823	0.9462	0.4191		
5	170.5229	169.6657	-6.1667	-0.0465	775.3758	775.3758	1.8924	0.8322		
5	171.0183	170.1607	-6.1667	-0.0661	772.1046	772.1046	0.9462	0.4219		
6	171.8438	170.9850	-6.1667	-0.1124	771.9771	771.9771	0.0000	0.0165		
6	172.6693	171.8092	-6.1667	-0.1586	771.8497	771.8497	0.0000	0.0165		
6	173.3632	172.5019	-6.1667	-0.1975	771.7426	771.7426	0.0000	0.0139		

TENDON Main Deck D5-L, Calculations

Segment	Length (ft)	X (ft)	Y (ft)	Z (ft)	Force (kips)	Force after Anchor-Set (kips)	Angle Change (deg)	Force Loss (%)
1	0.0000	-0.8302	7.6667	-2.0558	834.8804	741.9393	0.0000	0.0000
1-3	1.0000	0.1626	7.6667	-1.9363	834.7134	742.1063	0.0000	0.0200
1-3	2.0000	1.1554	7.6667	-1.8168	834.5465	742.2732	0.0000	0.0200
3	2.0263	1.1815	7.6667	-1.8136	828.8346	747.9850	1.5728	0.6844
3	2.8497	2.0014	7.6667	-1.7377	817.4019	759.4178	3.1456	1.3794
3	3.6731	2.8242	7.6667	-1.7069	811.6780	765.1417	1.5728	0.7003
3-5	4.6731	3.8242	7.6667	-1.6969	811.5157	765.3040	0.0000	0.0200
3-5	5.6731	4.8241	7.6667	-1.6869	811.3534	765.4663	0.0000	0.0200
3-5	6.6731	5.8241	7.6667	-1.6769	811.1911	765.6285	0.0000	0.0200
3-5	7.6731	6.8240	7.6667	-1.6669	811.0289	765.7908	0.0000	0.0200
3-5	8.6731	7.8240	7.6667	-1.6569	810.8667	765.9530	0.0000	0.0200
3-5	9.6731	8.8239	7.6667	-1.6469	810.7046	766.1151	0.0000	0.0200
3-5	10.6731	9.8239	7.6667	-1.6369	810.5424	766.2772	0.0000	0.0200
3-5	11.6731	10.8238	7.6667	-1.6269	810.3804	766.4393	0.0000	0.0200
3-5	12.6731	11.8238	7.6667	-1.6169	810.2183	766.6014	0.0000	0.0200
3-5	13.6731	12.8237	7.6667	-1.6069	810.0563	766.7634	0.0000	0.0200
3-5	14.6731	13.8237	7.6667	-1.5969	809.8943	766.9254	0.0000	0.0200
3-5	15.6731	14.8236	7.6667	-1.5869	809.7323	767.0874	0.0000	0.0200
3-5	16.6731	15.8236	7.6667	-1.5769	809.5704	767.2493	0.0000	0.0200
3-5	17.6731	16.8235	7.6667	-1.5669	809.4085	767.4112	0.0000	0.0200
3-5	18.6731	17.8235	7.6667	-1.5569	809.2466	767.5731	0.0000	0.0200
3-5	19.6731	18.8234	7.6667	-1.5469	809.0848	767.7349	0.0000	0.0200
3-5	20.6731	19.8234	7.6667	-1.5369	808.9230	767.8967	0.0000	0.0200
3-5	21.6731	20.8233	7.6667	-1.5269	808.7612	768.0585	0.0000	0.0200
3-5	22.6731	21.8233	7.6667	-1.5169	808.5995	768.2202	0.0000	0.0200
3-5	23.6731	22.8232	7.6667	-1.5069	808.4378	768.3819	0.0000	0.0200
3-5	24.6731	23.8232	7.6667	-1.4969	808.2761	768.5436	0.0000	0.0200
3-5	25.6731	24.8231	7.6667	-1.4869	808.1145	768.7052	0.0000	0.0200
3-5	26.6731	25.8231	7.6667	-1.4769	807.9529	768.8668	0.0000	0.0200
3-5	27.6731	26.8230	7.6667	-1.4669	807.7913	769.0284	0.0000	0.0200
3-5	28.6731	27.8230	7.6667	-1.4569	807.6297	769.1899	0.0000	0.0200
3-5	29.6731	28.8229	7.6667	-1.4469	807.4682	769.3515	0.0000	0.0200

TENDON Main Deck D5-L, Calculations

Segment	Length (ft)	X (ft)	Y (ft)	Z (ft)	Force (kips)	Force after Anchor-Set (kips)	Angle Change (deg)	Force Loss (%)	Containing Element	Additional Info.
3-5	30.6731	29.8229	7.6667	-1.4369	807.3068	769.5129	0.0000	0.0200		
3-5	31.6731	30.8228	7.6667	-1.4269	807.1453	769.6744	0.0000	0.0200		
3-5	32.6731	31.8228	7.6667	-1.4169	806.9839	769.8358	0.0000	0.0200		
3-5	33.6731	32.8227	7.6667	-1.4069	806.8225	769.9972	0.0000	0.0200		
3-5	34.6731	33.8227	7.6667	-1.3969	806.6612	770.1585	0.0000	0.0200		
3-5	35.6731	34.8226	7.6667	-1.3869	806.4998	770.3198	0.0000	0.0200		
3-5	36.6731	35.8226	7.6667	-1.3769	806.3386	770.4811	0.0000	0.0200		
3-5	37.6731	36.8225	7.6667	-1.3669	806.1773	770.6424	0.0000	0.0200		
3-5	38.6731	37.8225	7.6667	-1.3569	806.0161	770.8036	0.0000	0.0200		
3-5	39.6731	38.8224	7.6667	-1.3469	805.8549	770.9648	0.0000	0.0200		
3-5	40.6731	39.8224	7.6667	-1.3369	805.6938	771.1259	0.0000	0.0200		
3-5	41.6731	40.8223	7.6667	-1.3269	805.5326	771.2871	0.0000	0.0200		
3-5	42.6731	41.8223	7.6667	-1.3169	805.3715	771.4481	0.0000	0.0200		
3-5	43.6731	42.8222	7.6667	-1.3069	805.2105	771.6092	0.0000	0.0200		
3-5	44.6731	43.8222	7.6667	-1.2969	805.0495	771.7702	0.0000	0.0200		
3-5	45.6731	44.8221	7.6667	-1.2869	804.8885	771.9312	0.0000	0.0200		
3-5	46.6731	45.8221	7.6667	-1.2769	804.7275	772.0922	0.0000	0.0200		
3-5	47.6731	46.8220	7.6667	-1.2669	804.5666	772.2531	0.0000	0.0200		
3-5	48.6731	47.8220	7.6667	-1.2569	804.4057	772.4140	0.0000	0.0200		
3-5	49.6731	48.8219	7.6667	-1.2469	804.2448	772.5749	0.0000	0.0200		
3-5	50.6731	49.8219	7.6667	-1.2369	804.0840	772.7357	0.0000	0.0200		
3-5	51.6731	50.8218	7.6667	-1.2269	803.9232	772.8965	0.0000	0.0200		
3-5	52.6731	51.8218	7.6667	-1.2169	803.7624	773.0573	0.0000	0.0200		
3-5	53.6731	52.8217	7.6667	-1.2069	803.6017	773.2180	0.0000	0.0200		
3-5	54.6731	53.8217	7.6667	-1.1969	803.4410	773.3787	0.0000	0.0200		
3-5	55.6731	54.8216	7.6667	-1.1869	803.2803	773.5394	0.0000	0.0200		
3-5	56.6731	55.8216	7.6667	-1.1769	803.1197	773.7000	0.0000	0.0200		
3-5	57.6731	56.8215	7.6667	-1.1669	802.9590	773.8606	0.0000	0.0200		
3-5	58.6731	57.8215	7.6667	-1.1569	802.7985	774.0212	0.0000	0.0200		
3-5	59.6731	58.8214	7.6667	-1.1469	802.6379	774.1818	0.0000	0.0200		
3-5	60.6731	59.8214	7.6667	-1.1369	802.4774	774.3423	0.0000	0.0200		
3-5	61.6731	60.8213	7.6667	-1.1269	802.3169	774.5027	0.0000	0.0200		
3-5	62.6731	61.8213	7.6667	-1.1169	802.1565	774.6632	0.0000	0.0200		
3-5	63.6731	62.8212	7.6667	-1.1069	801.9961	774.8236	0.0000	0.0200		

TENDON Main Deck D5-L, Calculations

Segment	Length (ft)	X (ft)	Y (ft)	Z (ft)	Force (kips)	Force after Anchor-Set (kips)	Angle Change (deg)	Force Loss (%)	Containing Element	Additional Info.
3-5	64.6731	63.8212	7.6667	-1.0969	801.8357	774.9840	0.0000	0.0200		
3-5	65.6731	64.8211	7.6667	-1.0869	801.6753	775.1443	0.0000	0.0200		
3-5	66.6731	65.8211	7.6667	-1.0769	801.5150	775.3047	0.0000	0.0200		
3-5	67.6731	66.8210	7.6667	-1.0669	801.3547	775.4650	0.0000	0.0200		
3-5	68.6731	67.8210	7.6667	-1.0569	801.1945	775.6252	0.0000	0.0200		
3-5	69.6731	68.8209	7.6667	-1.0469	801.0343	775.7854	0.0000	0.0200		
3-5	70.6731	69.8209	7.6667	-1.0369	800.8741	775.9456	0.0000	0.0200		
3-5	71.6731	70.8208	7.6667	-1.0269	800.7139	776.1058	0.0000	0.0200		
3-5	72.6731	71.8208	7.6667	-1.0169	800.5538	776.2659	0.0000	0.0200		
3-5	73.6731	72.8207	7.6667	-1.0069	800.3937	776.4260	0.0000	0.0200		
3-5	74.6731	73.8207	7.6667	-0.9969	800.2336	776.5861	0.0000	0.0200		
3-5	75.6731	74.8206	7.6667	-0.9869	800.0736	776.7461	0.0000	0.0200		
3-5	76.6731	75.8206	7.6667	-0.9769	799.9136	776.9061	0.0000	0.0200		
3-5	77.6731	76.8205	7.6667	-0.9669	799.7536	777.0661	0.0000	0.0200		
3-5	78.6731	77.8205	7.6667	-0.9569	799.5937	777.2260	0.0000	0.0200		
3-5	79.6731	78.8204	7.6667	-0.9469	799.4338	777.3859	0.0000	0.0200		
3-5	80.6731	79.8204	7.6667	-0.9369	799.2739	777.5458	0.0000	0.0200		
3-5	81.6731	80.8203	7.6667	-0.9269	799.1141	777.7056	0.0000	0.0200		
3-5	82.6731	81.8203	7.6667	-0.9169	798.9543	777.8654	0.0000	0.0200		
3-5	83.6731	82.8202	7.6667	-0.9069	798.7945	778.0252	0.0000	0.0200		
3-5	84.6731	83.8202	7.6667	-0.8969	798.6348	778.1849	0.0000	0.0200		
3-5	85.6731	84.8201	7.6667	-0.8869	798.4750	778.3446	0.0000	0.0200		
3-5	86.6731	85.8201	7.6667	-0.8769	798.3154	778.5043	0.0000	0.0200		
3-5	87.6731	86.8200	7.6667	-0.8669	798.1557	778.6640	0.0000	0.0200		
3-5	88.6731	87.8200	7.6667	-0.8569	797.9961	778.8236	0.0000	0.0200		
3-5	89.6731	88.8199	7.6667	-0.8469	797.8365	778.9832	0.0000	0.0200		
3-5	90.6731	89.8199	7.6667	-0.8369	797.6770	779.1427	0.0000	0.0200		
3-5	91.6731	90.8198	7.6667	-0.8269	797.5174	779.3022	0.0000	0.0200		
3-5	92.6731	91.8198	7.6667	-0.8169	797.3580	779.4617	0.0000	0.0200		
3-5	93.6731	92.8197	7.6667	-0.8069	797.1985	779.6212	0.0000	0.0200		
3-5	94.6731	93.8197	7.6667	-0.7969	797.0391	779.7806	0.0000	0.0200		
3-5	95.6731	94.8196	7.6667	-0.7869	796.8797	779.9400	0.0000	0.0200		
3-5	96.6731	95.8196	7.6667	-0.7769	796.7203	780.0994	0.0000	0.0200		
3-5	97.6731	96.8195	7.6667	-0.7669	796.5610	780.2587	0.0000	0.0200		

TENDON Main Deck D5-L, Calculations

Segment	Length (ft)	X (ft)	Y (ft)	Z (ft)	Force (kips)	Force after Anchor-Set (kips)	Angle Change (deg)	Force Loss (%)	Containing Element	Additional Info.
3-5	98.6731	97.8195	7.6667	-0.7569	796.4017	780.4180	0.0000	0.0200		
3-5	99.6731	98.8194	7.6667	-0.7469	796.2424	780.5772	0.0000	0.0200		
3-5	100.6731	99.8194	7.6667	-0.7369	796.0832	780.7365	0.0000	0.0200		
3-5	101.6731	100.8193	7.6667	-0.7269	795.9240	780.8957	0.0000	0.0200		
3-5	102.6731	101.8193	7.6667	-0.7169	795.7648	781.0548	0.0000	0.0200		
3-5	103.6731	102.8192	7.6667	-0.7069	795.6057	781.2140	0.0000	0.0200		
3-5	104.6731	103.8192	7.6667	-0.6969	795.4466	781.3731	0.0000	0.0200		
3-5	105.6731	104.8191	7.6667	-0.6869	795.2875	781.5322	0.0000	0.0200		
3-5	106.6731	105.8191	7.6667	-0.6769	795.1285	781.6912	0.0000	0.0200		
3-5	107.6731	106.8190	7.6667	-0.6669	794.9695	781.8502	0.0000	0.0200		
3-5	108.6731	107.8190	7.6667	-0.6569	794.8105	782.0092	0.0000	0.0200		
3-5	109.6731	108.8189	7.6667	-0.6469	794.6515	782.1681	0.0000	0.0200		
3-5	110.6731	109.8189	7.6667	-0.6369	794.4926	782.3271	0.0000	0.0200		
3-5	111.6731	110.8188	7.6667	-0.6269	794.3337	782.4859	0.0000	0.0200		
3-5	112.6731	111.8188	7.6667	-0.6169	794.1749	782.6448	0.0000	0.0200		
3-5	113.6731	112.8187	7.6667	-0.6069	794.0161	782.8036	0.0000	0.0200		
3-5	114.6731	113.8187	7.6667	-0.5969	793.8573	782.9624	0.0000	0.0200		
3-5	115.6731	114.8186	7.6667	-0.5869	793.6985	783.1211	0.0000	0.0200		
3-5	116.6731	115.8186	7.6667	-0.5769	793.5398	783.2799	0.0000	0.0200		
3-5	117.6731	116.8185	7.6667	-0.5669	793.3811	783.4386	0.0000	0.0200		
3-5	118.6731	117.8185	7.6667	-0.5569	793.2225	783.5972	0.0000	0.0200		
3-5	119.6731	118.8184	7.6667	-0.5469	793.0638	783.7559	0.0000	0.0200		
3-5	120.6731	119.8184	7.6667	-0.5369	792.9052	783.9145	0.0000	0.0200		
3-5	121.6731	120.8183	7.6667	-0.5269	792.7467	784.0730	0.0000	0.0200		
3-5	122.6731	121.8183	7.6667	-0.5169	792.5881	784.2315	0.0000	0.0200		
3-5	123.6731	122.8182	7.6667	-0.5069	792.4296	784.3901	0.0000	0.0200		
3-5	124.6731	123.8182	7.6667	-0.4969	792.2712	784.5485	0.0000	0.0200		
3-5	125.6731	124.8181	7.6667	-0.4869	792.1127	784.7070	0.0000	0.0200		
3-5	126.6731	125.8181	7.6667	-0.4769	791.9543	784.8654	0.0000	0.0200		
3-5	127.6731	126.8180	7.6667	-0.4669	791.7959	785.0237	0.0000	0.0200		
3-5	128.6731	127.8180	7.6667	-0.4569	791.6376	785.1821	0.0000	0.0200		
3-5	129.6731	128.8179	7.6667	-0.4469	791.4793	785.3404	0.0000	0.0200		
3-5	130.6731	129.8179	7.6667	-0.4369	791.3210	785.4987	0.0000	0.0200		
3-5	131.6731	130.8178	7.6667	-0.4269	791.1628	785.6569	0.0000	0.0200		

TENDON Main Deck D5-L, Calculations

Segment	Length (ft)	X (ft)	Y (ft)	Z (ft)	Force (kips)	Force after Anchor-Set (kips)	Angle Change (deg)	Force Loss (%)	Containing Element	Additional Info.
3-5	132.6731	131.8178	7.6667	-0.4169	791.0045	785.8151	0.0000	0.0200		
3-5	133.6731	132.8177	7.6667	-0.4069	790.8464	785.9733	0.0000	0.0200		
3-5	134.6731	133.8177	7.6667	-0.3968	790.6882	786.1315	0.0000	0.0200		
3-5	135.6731	134.8176	7.6667	-0.3868	790.5301	786.2896	0.0000	0.0200		
3-5	136.6731	135.8176	7.6667	-0.3768	790.3720	786.4477	0.0000	0.0200		
3-5	137.6731	136.8175	7.6667	-0.3668	790.2139	786.6058	0.0000	0.0200		
3-5	138.6731	137.8175	7.6667	-0.3568	790.0559	786.7638	0.0000	0.0200		
3-5	139.6731	138.8174	7.6667	-0.3468	789.8979	786.9218	0.0000	0.0200		
3-5	140.6731	139.8174	7.6667	-0.3368	789.7399	787.0797	0.0000	0.0200		
3-5	141.6731	140.8173	7.6667	-0.3268	789.5820	787.2377	0.0000	0.0200		
3-5	142.6731	141.8173	7.6667	-0.3168	789.4241	787.3956	0.0000	0.0200		
3-5	143.6731	142.8172	7.6667	-0.3068	789.2662	787.5534	0.0000	0.0200		
3-5	144.6731	143.8172	7.6667	-0.2968	789.1084	787.7113	0.0000	0.0200		
3-5	145.6731	144.8171	7.6667	-0.2868	788.9506	787.8691	0.0000	0.0200		
3-5	146.6731	145.8171	7.6667	-0.2768	788.7928	788.0269	0.0000	0.0200		
3-5	147.6731	146.8170	7.6667	-0.2668	788.6351	788.1846	0.0000	0.0200		
3-5	148.6731	147.8170	7.6667	-0.2568	788.4774	788.3423	0.0000	0.0200		
3-5	149.6731	148.8169	7.6667	-0.2468	788.3197	788.3197	0.0000	0.0200		
3-5	150.6731	149.8169	7.6667	-0.2368	788.1620	788.1620	0.0000	0.0200		
3-5	151.6731	150.8168	7.6667	-0.2268	788.0044	788.0044	0.0000	0.0200		
3-5	152.6731	151.8168	7.6667	-0.2168	787.8468	787.8468	0.0000	0.0200		
3-5	153.6731	152.8167	7.6667	-0.2068	787.6893	787.6893	0.0000	0.0200		
3-5	154.6731	153.8167	7.6667	-0.1968	787.5318	787.5318	0.0000	0.0200		
3-5	155.6731	154.8166	7.6667	-0.1868	787.3743	787.3743	0.0000	0.0200		
3-5	156.6731	155.8166	7.6667	-0.1768	787.2168	787.2168	0.0000	0.0200		
3-5	157.6731	156.8165	7.6667	-0.1668	787.0594	787.0594	0.0000	0.0200		
3-5	158.6731	157.8165	7.6667	-0.1568	786.9020	786.9020	0.0000	0.0200		
3-5	159.6731	158.8164	7.6667	-0.1468	786.7446	786.7446	0.0000	0.0200		
3-5	160.6731	159.8164	7.6667	-0.1368	786.5873	786.5873	0.0000	0.0200		
3-5	161.6731	160.8163	7.6667	-0.1268	786.4300	786.4300	0.0000	0.0200		
3-5	162.6731	161.8163	7.6667	-0.1168	786.2727	786.2727	0.0000	0.0200		
3-5	163.6731	162.8162	7.6667	-0.1068	786.1155	786.1155	0.0000	0.0200		
3-5	164.6731	163.8162	7.6667	-0.0968	785.9583	785.9583	0.0000	0.0200		
3-5	165.6731	164.8161	7.6667	-0.0868	785.8011	785.8011	0.0000	0.0200		

TENDON Main Deck D5-L, Calculations

Segment	Length (ft)	X (ft)	Y (ft)	Z (ft)	Force (kips)	Force after Anchor-Set (kips)	Angle Change (deg)	Force Loss (%)	Containing Element	Additional Info.
3-5	166.6731	165.8161	7.6667	-0.0768	785.6440	785.6440	0.0000	0.0200		
3-5	167.6731	166.8160	7.6667	-0.0668	785.4868	785.4868	0.0000	0.0200		
3-5	168.6731	167.8160	7.6667	-0.0568	785.3298	785.3298	0.0000	0.0200		
3-5	169.6731	168.8159	7.6667	-0.0468	785.1727	785.1727	0.0000	0.0200		
5	170.0275	169.1703	7.6667	-0.0433	781.8823	781.8823	0.9462	0.4191		
5	170.5229	169.6657	7.6667	-0.0465	775.3758	775.3758	1.8924	0.8322		
5	171.0183	170.1607	7.6667	-0.0661	772.1046	772.1046	0.9462	0.4219		
6	171.8438	170.9850	7.6667	-0.1124	771.9771	771.9771	0.0000	0.0165		
6	172.6693	171.8092	7.6667	-0.1586	771.8497	771.8497	0.0000	0.0165		
6	173.3632	172.5019	7.6667	-0.1975	771.7426	771.7426	0.0000	0.0139		

TENDON Main Deck D5-R, Calculations

Segment	Length (ft)	X (ft)	Y (ft)	Z (ft)	Force (kips)	Force after Anchor-Set (kips)	Angle Change (deg)	Force Loss (%)
1	0.0000	-0.8302	-7.6667	-2.0558	834.8804	741.9393	0.0000	0.0000
1-3	1.0000	0.1626	-7.6667	-1.9363	834.7134	742.1063	0.0000	0.0200
1-3	2.0000	1.1554	-7.6667	-1.8168	834.5465	742.2732	0.0000	0.0200
3	2.0263	1.1815	-7.6667	-1.8136	828.8346	747.9850	1.5728	0.6844
3	2.8497	2.0014	-7.6667	-1.7377	817.4019	759.4178	3.1456	1.3794
3	3.6731	2.8242	-7.6667	-1.7069	811.6780	765.1417	1.5728	0.7003
3-5	4.6731	3.8242	-7.6667	-1.6969	811.5157	765.3040	0.0000	0.0200
3-5	5.6731	4.8241	-7.6667	-1.6869	811.3534	765.4663	0.0000	0.0200
3-5	6.6731	5.8241	-7.6667	-1.6769	811.1911	765.6285	0.0000	0.0200
3-5	7.6731	6.8240	-7.6667	-1.6669	811.0289	765.7908	0.0000	0.0200
3-5	8.6731	7.8240	-7.6667	-1.6569	810.8667	765.9530	0.0000	0.0200
3-5	9.6731	8.8239	-7.6667	-1.6469	810.7046	766.1151	0.0000	0.0200
3-5	10.6731	9.8239	-7.6667	-1.6369	810.5424	766.2772	0.0000	0.0200
3-5	11.6731	10.8238	-7.6667	-1.6269	810.3804	766.4393	0.0000	0.0200
3-5	12.6731	11.8238	-7.6667	-1.6169	810.2183	766.6014	0.0000	0.0200
3-5	13.6731	12.8237	-7.6667	-1.6069	810.0563	766.7634	0.0000	0.0200
3-5	14.6731	13.8237	-7.6667	-1.5969	809.8943	766.9254	0.0000	0.0200
3-5	15.6731	14.8236	-7.6667	-1.5869	809.7323	767.0874	0.0000	0.0200
3-5	16.6731	15.8236	-7.6667	-1.5769	809.5704	767.2493	0.0000	0.0200

TENDON Main Deck D5-R, Calculations

Segment	Length (ft)	X (ft)	Y (ft)	Z (ft)	Force (kips)	Force after Anchor-Set (kips)	Angle Change (deg)	Force Loss (%)	Containing Element	Additional Info.
3-5	17.6731	16.8235	-7.6667	-1.5669	809.4085	767.4112	0.0000	0.0200		
3-5	18.6731	17.8235	-7.6667	-1.5569	809.2466	767.5731	0.0000	0.0200		
3-5	19.6731	18.8234	-7.6667	-1.5469	809.0848	767.7349	0.0000	0.0200		
3-5	20.6731	19.8234	-7.6667	-1.5369	808.9230	767.8967	0.0000	0.0200		
3-5	21.6731	20.8233	-7.6667	-1.5269	808.7612	768.0585	0.0000	0.0200		
3-5	22.6731	21.8233	-7.6667	-1.5169	808.5995	768.2202	0.0000	0.0200		
3-5	23.6731	22.8232	-7.6667	-1.5069	808.4378	768.3819	0.0000	0.0200		
3-5	24.6731	23.8232	-7.6667	-1.4969	808.2761	768.5436	0.0000	0.0200		
3-5	25.6731	24.8231	-7.6667	-1.4869	808.1145	768.7052	0.0000	0.0200		
3-5	26.6731	25.8231	-7.6667	-1.4769	807.9529	768.8668	0.0000	0.0200		
3-5	27.6731	26.8230	-7.6667	-1.4669	807.7913	769.0284	0.0000	0.0200		
3-5	28.6731	27.8230	-7.6667	-1.4569	807.6297	769.1899	0.0000	0.0200		
3-5	29.6731	28.8229	-7.6667	-1.4469	807.4682	769.3515	0.0000	0.0200		
3-5	30.6731	29.8229	-7.6667	-1.4369	807.3068	769.5129	0.0000	0.0200		
3-5	31.6731	30.8228	-7.6667	-1.4269	807.1453	769.6744	0.0000	0.0200		
3-5	32.6731	31.8228	-7.6667	-1.4169	806.9839	769.8358	0.0000	0.0200		
3-5	33.6731	32.8227	-7.6667	-1.4069	806.8225	769.9972	0.0000	0.0200		
3-5	34.6731	33.8227	-7.6667	-1.3969	806.6612	770.1585	0.0000	0.0200		
3-5	35.6731	34.8226	-7.6667	-1.3869	806.4998	770.3198	0.0000	0.0200		
3-5	36.6731	35.8226	-7.6667	-1.3769	806.3386	770.4811	0.0000	0.0200		
3-5	37.6731	36.8225	-7.6667	-1.3669	806.1773	770.6424	0.0000	0.0200		
3-5	38.6731	37.8225	-7.6667	-1.3569	806.0161	770.8036	0.0000	0.0200		
3-5	39.6731	38.8224	-7.6667	-1.3469	805.8549	770.9648	0.0000	0.0200		
3-5	40.6731	39.8224	-7.6667	-1.3369	805.6938	771.1259	0.0000	0.0200		
3-5	41.6731	40.8223	-7.6667	-1.3269	805.5326	771.2871	0.0000	0.0200		
3-5	42.6731	41.8223	-7.6667	-1.3169	805.3715	771.4481	0.0000	0.0200		
3-5	43.6731	42.8222	-7.6667	-1.3069	805.2105	771.6092	0.0000	0.0200		
3-5	44.6731	43.8222	-7.6667	-1.2969	805.0495	771.7702	0.0000	0.0200		
3-5	45.6731	44.8221	-7.6667	-1.2869	804.8885	771.9312	0.0000	0.0200		
3-5	46.6731	45.8221	-7.6667	-1.2769	804.7275	772.0922	0.0000	0.0200		
3-5	47.6731	46.8220	-7.6667	-1.2669	804.5666	772.2531	0.0000	0.0200		
3-5	48.6731	47.8220	-7.6667	-1.2569	804.4057	772.4140	0.0000	0.0200		
3-5	49.6731	48.8219	-7.6667	-1.2469	804.2448	772.5749	0.0000	0.0200		
3-5	50.6731	49.8219	-7.6667	-1.2369	804.0840	772.7357	0.0000	0.0200		

TENDON Main Deck D5-R, Calculations

Segment	Length (ft)	X (ft)	Y (ft)	Z (ft)	Force (kips)	Force after Anchor-Set (kips)	Angle Change (deg)	Force Loss (%)	Containing Element	Additional Info.
3-5	51.6731	50.8218	-7.6667	-1.2269	803.9232	772.8965	0.0000	0.0200		
3-5	52.6731	51.8218	-7.6667	-1.2169	803.7624	773.0573	0.0000	0.0200		
3-5	53.6731	52.8217	-7.6667	-1.2069	803.6017	773.2180	0.0000	0.0200		
3-5	54.6731	53.8217	-7.6667	-1.1969	803.4410	773.3787	0.0000	0.0200		
3-5	55.6731	54.8216	-7.6667	-1.1869	803.2803	773.5394	0.0000	0.0200		
3-5	56.6731	55.8216	-7.6667	-1.1769	803.1197	773.7000	0.0000	0.0200		
3-5	57.6731	56.8215	-7.6667	-1.1669	802.9590	773.8606	0.0000	0.0200		
3-5	58.6731	57.8215	-7.6667	-1.1569	802.7985	774.0212	0.0000	0.0200		
3-5	59.6731	58.8214	-7.6667	-1.1469	802.6379	774.1818	0.0000	0.0200		
3-5	60.6731	59.8214	-7.6667	-1.1369	802.4774	774.3423	0.0000	0.0200		
3-5	61.6731	60.8213	-7.6667	-1.1269	802.3169	774.5027	0.0000	0.0200		
3-5	62.6731	61.8213	-7.6667	-1.1169	802.1565	774.6632	0.0000	0.0200		
3-5	63.6731	62.8212	-7.6667	-1.1069	801.9961	774.8236	0.0000	0.0200		
3-5	64.6731	63.8212	-7.6667	-1.0969	801.8357	774.9840	0.0000	0.0200		
3-5	65.6731	64.8211	-7.6667	-1.0869	801.6753	775.1443	0.0000	0.0200		
3-5	66.6731	65.8211	-7.6667	-1.0769	801.5150	775.3047	0.0000	0.0200		
3-5	67.6731	66.8210	-7.6667	-1.0669	801.3547	775.4650	0.0000	0.0200		
3-5	68.6731	67.8210	-7.6667	-1.0569	801.1945	775.6252	0.0000	0.0200		
3-5	69.6731	68.8209	-7.6667	-1.0469	801.0343	775.7854	0.0000	0.0200		
3-5	70.6731	69.8209	-7.6667	-1.0369	800.8741	775.9456	0.0000	0.0200		
3-5	71.6731	70.8208	-7.6667	-1.0269	800.7139	776.1058	0.0000	0.0200		
3-5	72.6731	71.8208	-7.6667	-1.0169	800.5538	776.2659	0.0000	0.0200		
3-5	73.6731	72.8207	-7.6667	-1.0069	800.3937	776.4260	0.0000	0.0200		
3-5	74.6731	73.8207	-7.6667	-0.9969	800.2336	776.5861	0.0000	0.0200		
3-5	75.6731	74.8206	-7.6667	-0.9869	800.0736	776.7461	0.0000	0.0200		
3-5	76.6731	75.8206	-7.6667	-0.9769	799.9136	776.9061	0.0000	0.0200		
3-5	77.6731	76.8205	-7.6667	-0.9669	799.7536	777.0661	0.0000	0.0200		
3-5	78.6731	77.8205	-7.6667	-0.9569	799.5937	777.2260	0.0000	0.0200		
3-5	79.6731	78.8204	-7.6667	-0.9469	799.4338	777.3859	0.0000	0.0200		
3-5	80.6731	79.8204	-7.6667	-0.9369	799.2739	777.5458	0.0000	0.0200		
3-5	81.6731	80.8203	-7.6667	-0.9269	799.1141	777.7056	0.0000	0.0200		
3-5	82.6731	81.8203	-7.6667	-0.9169	798.9543	777.8654	0.0000	0.0200		
3-5	83.6731	82.8202	-7.6667	-0.9069	798.7945	778.0252	0.0000	0.0200		
3-5	84.6731	83.8202	-7.6667	-0.8969	798.6348	778.1849	0.0000	0.0200		

TENDON Main Deck D5-R, Calculations

Segment	Length (ft)	X (ft)	Y (ft)	Z (ft)	Force (kips)	Force after Anchor-Set (kips)	Angle Change (deg)	Force Loss (%)	Containing Element	Additional Info.
3-5	85.6731	84.8201	-7.6667	-0.8869	798.4750	778.3446	0.0000	0.0200		
3-5	86.6731	85.8201	-7.6667	-0.8769	798.3154	778.5043	0.0000	0.0200		
3-5	87.6731	86.8200	-7.6667	-0.8669	798.1557	778.6640	0.0000	0.0200		
3-5	88.6731	87.8200	-7.6667	-0.8569	797.9961	778.8236	0.0000	0.0200		
3-5	89.6731	88.8199	-7.6667	-0.8469	797.8365	778.9832	0.0000	0.0200		
3-5	90.6731	89.8199	-7.6667	-0.8369	797.6770	779.1427	0.0000	0.0200		
3-5	91.6731	90.8198	-7.6667	-0.8269	797.5174	779.3022	0.0000	0.0200		
3-5	92.6731	91.8198	-7.6667	-0.8169	797.3580	779.4617	0.0000	0.0200		
3-5	93.6731	92.8197	-7.6667	-0.8069	797.1985	779.6212	0.0000	0.0200		
3-5	94.6731	93.8197	-7.6667	-0.7969	797.0391	779.7806	0.0000	0.0200		
3-5	95.6731	94.8196	-7.6667	-0.7869	796.8797	779.9400	0.0000	0.0200		
3-5	96.6731	95.8196	-7.6667	-0.7769	796.7203	780.0994	0.0000	0.0200		
3-5	97.6731	96.8195	-7.6667	-0.7669	796.5610	780.2587	0.0000	0.0200		
3-5	98.6731	97.8195	-7.6667	-0.7569	796.4017	780.4180	0.0000	0.0200		
3-5	99.6731	98.8194	-7.6667	-0.7469	796.2424	780.5772	0.0000	0.0200		
3-5	100.6731	99.8194	-7.6667	-0.7369	796.0832	780.7365	0.0000	0.0200		
3-5	101.6731	100.8193	-7.6667	-0.7269	795.9240	780.8957	0.0000	0.0200		
3-5	102.6731	101.8193	-7.6667	-0.7169	795.7648	781.0548	0.0000	0.0200		
3-5	103.6731	102.8192	-7.6667	-0.7069	795.6057	781.2140	0.0000	0.0200		
3-5	104.6731	103.8192	-7.6667	-0.6969	795.4466	781.3731	0.0000	0.0200		
3-5	105.6731	104.8191	-7.6667	-0.6869	795.2875	781.5322	0.0000	0.0200		
3-5	106.6731	105.8191	-7.6667	-0.6769	795.1285	781.6912	0.0000	0.0200		
3-5	107.6731	106.8190	-7.6667	-0.6669	794.9695	781.8502	0.0000	0.0200		
3-5	108.6731	107.8190	-7.6667	-0.6569	794.8105	782.0092	0.0000	0.0200		
3-5	109.6731	108.8189	-7.6667	-0.6469	794.6515	782.1681	0.0000	0.0200		
3-5	110.6731	109.8189	-7.6667	-0.6369	794.4926	782.3271	0.0000	0.0200		
3-5	111.6731	110.8188	-7.6667	-0.6269	794.3337	782.4859	0.0000	0.0200		
3-5	112.6731	111.8188	-7.6667	-0.6169	794.1749	782.6448	0.0000	0.0200		
3-5	113.6731	112.8187	-7.6667	-0.6069	794.0161	782.8036	0.0000	0.0200		
3-5	114.6731	113.8187	-7.6667	-0.5969	793.8573	782.9624	0.0000	0.0200		
3-5	115.6731	114.8186	-7.6667	-0.5869	793.6985	783.1211	0.0000	0.0200		
3-5	116.6731	115.8186	-7.6667	-0.5769	793.5398	783.2799	0.0000	0.0200		
3-5	117.6731	116.8185	-7.6667	-0.5669	793.3811	783.4386	0.0000	0.0200		
3-5	118.6731	117.8185	-7.6667	-0.5569	793.2225	783.5972	0.0000	0.0200		

TENDON Main Deck D5-R, Calculations

Segment	Length (ft)	X (ft)	Y (ft)	Z (ft)	Force (kips)	Force after Anchor-Set (kips)	Angle Change (deg)	Force Loss (%)	Containing Element	Additional Info.
3-5	119.6731	118.8184	-7.6667	-0.5469	793.0638	783.7559	0.0000	0.0200		
3-5	120.6731	119.8184	-7.6667	-0.5369	792.9052	783.9145	0.0000	0.0200		
3-5	121.6731	120.8183	-7.6667	-0.5269	792.7467	784.0730	0.0000	0.0200		
3-5	122.6731	121.8183	-7.6667	-0.5169	792.5881	784.2315	0.0000	0.0200		
3-5	123.6731	122.8182	-7.6667	-0.5069	792.4296	784.3901	0.0000	0.0200		
3-5	124.6731	123.8182	-7.6667	-0.4969	792.2712	784.5485	0.0000	0.0200		
3-5	125.6731	124.8181	-7.6667	-0.4869	792.1127	784.7070	0.0000	0.0200		
3-5	126.6731	125.8181	-7.6667	-0.4769	791.9543	784.8654	0.0000	0.0200		
3-5	127.6731	126.8180	-7.6667	-0.4669	791.7959	785.0237	0.0000	0.0200		
3-5	128.6731	127.8180	-7.6667	-0.4569	791.6376	785.1821	0.0000	0.0200		
3-5	129.6731	128.8179	-7.6667	-0.4469	791.4793	785.3404	0.0000	0.0200		
3-5	130.6731	129.8179	-7.6667	-0.4369	791.3210	785.4987	0.0000	0.0200		
3-5	131.6731	130.8178	-7.6667	-0.4269	791.1628	785.6569	0.0000	0.0200		
3-5	132.6731	131.8178	-7.6667	-0.4169	791.0045	785.8151	0.0000	0.0200		
3-5	133.6731	132.8177	-7.6667	-0.4069	790.8464	785.9733	0.0000	0.0200		
3-5	134.6731	133.8177	-7.6667	-0.3968	790.6882	786.1315	0.0000	0.0200		
3-5	135.6731	134.8176	-7.6667	-0.3868	790.5301	786.2896	0.0000	0.0200		
3-5	136.6731	135.8176	-7.6667	-0.3768	790.3720	786.4477	0.0000	0.0200		
3-5	137.6731	136.8175	-7.6667	-0.3668	790.2139	786.6058	0.0000	0.0200		
3-5	138.6731	137.8175	-7.6667	-0.3568	790.0559	786.7638	0.0000	0.0200		
3-5	139.6731	138.8174	-7.6667	-0.3468	789.8979	786.9218	0.0000	0.0200		
3-5	140.6731	139.8174	-7.6667	-0.3368	789.7399	787.0797	0.0000	0.0200		
3-5	141.6731	140.8173	-7.6667	-0.3268	789.5820	787.2377	0.0000	0.0200		
3-5	142.6731	141.8173	-7.6667	-0.3168	789.4241	787.3956	0.0000	0.0200		
3-5	143.6731	142.8172	-7.6667	-0.3068	789.2662	787.5534	0.0000	0.0200		
3-5	144.6731	143.8172	-7.6667	-0.2968	789.1084	787.7113	0.0000	0.0200		
3-5	145.6731	144.8171	-7.6667	-0.2868	788.9506	787.8691	0.0000	0.0200		
3-5	146.6731	145.8171	-7.6667	-0.2768	788.7928	788.0269	0.0000	0.0200		
3-5	147.6731	146.8170	-7.6667	-0.2668	788.6351	788.1846	0.0000	0.0200		
3-5	148.6731	147.8170	-7.6667	-0.2568	788.4774	788.3423	0.0000	0.0200		
3-5	149.6731	148.8169	-7.6667	-0.2468	788.3197	788.3197	0.0000	0.0200		
3-5	150.6731	149.8169	-7.6667	-0.2368	788.1620	788.1620	0.0000	0.0200		
3-5	151.6731	150.8168	-7.6667	-0.2268	788.0044	788.0044	0.0000	0.0200		
3-5	152.6731	151.8168	-7.6667	-0.2168	787.8468	787.8468	0.0000	0.0200		

TENDON Main Deck D5-R, Calculations

Segment	Length (ft)	X (ft)	Y (ft)	Z (ft)	Force (kips)	Force after Anchor-Set (kips)	Angle Change (deg)	Force Loss (%)	Containing Element	Additional Info.
3-5	153.6731	152.8167	-7.6667	-0.2068	787.6893	787.6893	0.0000	0.0200		
3-5	154.6731	153.8167	-7.6667	-0.1968	787.5318	787.5318	0.0000	0.0200		
3-5	155.6731	154.8166	-7.6667	-0.1868	787.3743	787.3743	0.0000	0.0200		
3-5	156.6731	155.8166	-7.6667	-0.1768	787.2168	787.2168	0.0000	0.0200		
3-5	157.6731	156.8165	-7.6667	-0.1668	787.0594	787.0594	0.0000	0.0200		
3-5	158.6731	157.8165	-7.6667	-0.1568	786.9020	786.9020	0.0000	0.0200		
3-5	159.6731	158.8164	-7.6667	-0.1468	786.7446	786.7446	0.0000	0.0200		
3-5	160.6731	159.8164	-7.6667	-0.1368	786.5873	786.5873	0.0000	0.0200		
3-5	161.6731	160.8163	-7.6667	-0.1268	786.4300	786.4300	0.0000	0.0200		
3-5	162.6731	161.8163	-7.6667	-0.1168	786.2727	786.2727	0.0000	0.0200		
3-5	163.6731	162.8162	-7.6667	-0.1068	786.1155	786.1155	0.0000	0.0200		
3-5	164.6731	163.8162	-7.6667	-0.0968	785.9583	785.9583	0.0000	0.0200		
3-5	165.6731	164.8161	-7.6667	-0.0868	785.8011	785.8011	0.0000	0.0200		
3-5	166.6731	165.8161	-7.6667	-0.0768	785.6440	785.6440	0.0000	0.0200		
3-5	167.6731	166.8160	-7.6667	-0.0668	785.4868	785.4868	0.0000	0.0200		
3-5	168.6731	167.8160	-7.6667	-0.0568	785.3298	785.3298	0.0000	0.0200		
3-5	169.6731	168.8159	-7.6667	-0.0468	785.1727	785.1727	0.0000	0.0200		
5	170.0275	169.1703	-7.6667	-0.0433	781.8823	781.8823	0.9462	0.4191		
5	170.5229	169.6657	-7.6667	-0.0465	775.3758	775.3758	1.8924	0.8322		
5	171.0183	170.1607	-7.6667	-0.0661	772.1046	772.1046	0.9462	0.4219		
6	171.8438	170.9850	-7.6667	-0.1124	771.9771	771.9771	0.0000	0.0165		
6	172.6693	171.8092	-7.6667	-0.1586	771.8497	771.8497	0.0000	0.0165		
6	173.3632	172.5019	-7.6667	-0.1975	771.7426	771.7426	0.0000	0.0139		

TENDON Main Deck D6-L, Calculations

Segment	Length (ft)	X (ft)	Y (ft)	Z (ft)	Force (kips)	Force after Anchor-Set (kips)	Angle Change (deg)	Force Loss (%)
1	0.0000	-0.8302	9.1667	-2.0558	834.8804	741.9393	0.0000	0.0000
1-3	1.0000	0.1626	9.1667	-1.9363	834.7134	742.1063	0.0000	0.0200
1-3	2.0000	1.1554	9.1667	-1.8168	834.5465	742.2732	0.0000	0.0200
3	2.0263	1.1815	9.1667	-1.8136	828.8346	747.9850	1.5728	0.6844
3	2.8497	2.0014	9.1667	-1.7377	817.4019	759.4178	3.1456	1.3794
3	3.6731	2.8242	9.1667	-1.7069	811.6780	765.1417	1.5728	0.7003

TENDON Main Deck D6-L, Calculations

Segment	Length (ft)	X (ft)	Y (ft)	Z (ft)	Force (kips)	Force after Anchor-Set (kips)	Angle Change (deg)	Force Loss (%)	Containing Element	Additional Info.
3-5	4.6731	3.8242	9.1667	-1.6969	811.5157	765.3040	0.0000	0.0200		
3-5	5.6731	4.8241	9.1667	-1.6869	811.3534	765.4663	0.0000	0.0200		
3-5	6.6731	5.8241	9.1667	-1.6769	811.1911	765.6285	0.0000	0.0200		
3-5	7.6731	6.8240	9.1667	-1.6669	811.0289	765.7908	0.0000	0.0200		
3-5	8.6731	7.8240	9.1667	-1.6569	810.8667	765.9530	0.0000	0.0200		
3-5	9.6731	8.8239	9.1667	-1.6469	810.7046	766.1151	0.0000	0.0200		
3-5	10.6731	9.8239	9.1667	-1.6369	810.5424	766.2772	0.0000	0.0200		
3-5	11.6731	10.8238	9.1667	-1.6269	810.3804	766.4393	0.0000	0.0200		
3-5	12.6731	11.8238	9.1667	-1.6169	810.2183	766.6014	0.0000	0.0200		
3-5	13.6731	12.8237	9.1667	-1.6069	810.0563	766.7634	0.0000	0.0200		
3-5	14.6731	13.8237	9.1667	-1.5969	809.8943	766.9254	0.0000	0.0200		
3-5	15.6731	14.8236	9.1667	-1.5869	809.7323	767.0874	0.0000	0.0200		
3-5	16.6731	15.8236	9.1667	-1.5769	809.5704	767.2493	0.0000	0.0200		
3-5	17.6731	16.8235	9.1667	-1.5669	809.4085	767.4112	0.0000	0.0200		
3-5	18.6731	17.8235	9.1667	-1.5569	809.2466	767.5731	0.0000	0.0200		
3-5	19.6731	18.8234	9.1667	-1.5469	809.0848	767.7349	0.0000	0.0200		
3-5	20.6731	19.8234	9.1667	-1.5369	808.9230	767.8967	0.0000	0.0200		
3-5	21.6731	20.8233	9.1667	-1.5269	808.7612	768.0585	0.0000	0.0200		
3-5	22.6731	21.8233	9.1667	-1.5169	808.5995	768.2202	0.0000	0.0200		
3-5	23.6731	22.8232	9.1667	-1.5069	808.4378	768.3819	0.0000	0.0200		
3-5	24.6731	23.8232	9.1667	-1.4969	808.2761	768.5436	0.0000	0.0200		
3-5	25.6731	24.8231	9.1667	-1.4869	808.1145	768.7052	0.0000	0.0200		
3-5	26.6731	25.8231	9.1667	-1.4769	807.9529	768.8668	0.0000	0.0200		
3-5	27.6731	26.8230	9.1667	-1.4669	807.7913	769.0284	0.0000	0.0200		
3-5	28.6731	27.8230	9.1667	-1.4569	807.6297	769.1899	0.0000	0.0200		
3-5	29.6731	28.8229	9.1667	-1.4469	807.4682	769.3515	0.0000	0.0200		
3-5	30.6731	29.8229	9.1667	-1.4369	807.3068	769.5129	0.0000	0.0200		
3-5	31.6731	30.8228	9.1667	-1.4269	807.1453	769.6744	0.0000	0.0200		
3-5	32.6731	31.8228	9.1667	-1.4169	806.9839	769.8358	0.0000	0.0200		
3-5	33.6731	32.8227	9.1667	-1.4069	806.8225	769.9972	0.0000	0.0200		
3-5	34.6731	33.8227	9.1667	-1.3969	806.6612	770.1585	0.0000	0.0200		
3-5	35.6731	34.8226	9.1667	-1.3869	806.4998	770.3198	0.0000	0.0200		
3-5	36.6731	35.8226	9.1667	-1.3769	806.3386	770.4811	0.0000	0.0200		
3-5	37.6731	36.8225	9.1667	-1.3669	806.1773	770.6424	0.0000	0.0200		

TENDON Main Deck D6-L, Calculations

Segment	Length (ft)	X (ft)	Y (ft)	Z (ft)	Force (kips)	Force after Anchor-Set (kips)	Angle Change (deg)	Force Loss (%)	Containing Element	Additional Info.
3-5	38.6731	37.8225	9.1667	-1.3569	806.0161	770.8036	0.0000	0.0200		
3-5	39.6731	38.8224	9.1667	-1.3469	805.8549	770.9648	0.0000	0.0200		
3-5	40.6731	39.8224	9.1667	-1.3369	805.6938	771.1259	0.0000	0.0200		
3-5	41.6731	40.8223	9.1667	-1.3269	805.5326	771.2871	0.0000	0.0200		
3-5	42.6731	41.8223	9.1667	-1.3169	805.3715	771.4481	0.0000	0.0200		
3-5	43.6731	42.8222	9.1667	-1.3069	805.2105	771.6092	0.0000	0.0200		
3-5	44.6731	43.8222	9.1667	-1.2969	805.0495	771.7702	0.0000	0.0200		
3-5	45.6731	44.8221	9.1667	-1.2869	804.8885	771.9312	0.0000	0.0200		
3-5	46.6731	45.8221	9.1667	-1.2769	804.7275	772.0922	0.0000	0.0200		
3-5	47.6731	46.8220	9.1667	-1.2669	804.5666	772.2531	0.0000	0.0200		
3-5	48.6731	47.8220	9.1667	-1.2569	804.4057	772.4140	0.0000	0.0200		
3-5	49.6731	48.8219	9.1667	-1.2469	804.2448	772.5749	0.0000	0.0200		
3-5	50.6731	49.8219	9.1667	-1.2369	804.0840	772.7357	0.0000	0.0200		
3-5	51.6731	50.8218	9.1667	-1.2269	803.9232	772.8965	0.0000	0.0200		
3-5	52.6731	51.8218	9.1667	-1.2169	803.7624	773.0573	0.0000	0.0200		
3-5	53.6731	52.8217	9.1667	-1.2069	803.6017	773.2180	0.0000	0.0200		
3-5	54.6731	53.8217	9.1667	-1.1969	803.4410	773.3787	0.0000	0.0200		
3-5	55.6731	54.8216	9.1667	-1.1869	803.2803	773.5394	0.0000	0.0200		
3-5	56.6731	55.8216	9.1667	-1.1769	803.1197	773.7000	0.0000	0.0200		
3-5	57.6731	56.8215	9.1667	-1.1669	802.9590	773.8606	0.0000	0.0200		
3-5	58.6731	57.8215	9.1667	-1.1569	802.7985	774.0212	0.0000	0.0200		
3-5	59.6731	58.8214	9.1667	-1.1469	802.6379	774.1818	0.0000	0.0200		
3-5	60.6731	59.8214	9.1667	-1.1369	802.4774	774.3423	0.0000	0.0200		
3-5	61.6731	60.8213	9.1667	-1.1269	802.3169	774.5027	0.0000	0.0200		
3-5	62.6731	61.8213	9.1667	-1.1169	802.1565	774.6632	0.0000	0.0200		
3-5	63.6731	62.8212	9.1667	-1.1069	801.9961	774.8236	0.0000	0.0200		
3-5	64.6731	63.8212	9.1667	-1.0969	801.8357	774.9840	0.0000	0.0200		
3-5	65.6731	64.8211	9.1667	-1.0869	801.6753	775.1443	0.0000	0.0200		
3-5	66.6731	65.8211	9.1667	-1.0769	801.5150	775.3047	0.0000	0.0200		
3-5	67.6731	66.8210	9.1667	-1.0669	801.3547	775.4650	0.0000	0.0200		
3-5	68.6731	67.8210	9.1667	-1.0569	801.1945	775.6252	0.0000	0.0200		
3-5	69.6731	68.8209	9.1667	-1.0469	801.0343	775.7854	0.0000	0.0200		
3-5	70.6731	69.8209	9.1667	-1.0369	800.8741	775.9456	0.0000	0.0200		
3-5	71.6731	70.8208	9.1667	-1.0269	800.7139	776.1058	0.0000	0.0200		

TENDON Main Deck D6-L, Calculations

Segment	Length (ft)	X (ft)	Y (ft)	Z (ft)	Force (kips)	Force after Anchor-Set (kips)	Angle Change (deg)	Force Loss (%)	Containing Element	Additional Info.
3-5	72.6731	71.8208	9.1667	-1.0169	800.5538	776.2659	0.0000	0.0200		
3-5	73.6731	72.8207	9.1667	-1.0069	800.3937	776.4260	0.0000	0.0200		
3-5	74.6731	73.8207	9.1667	-0.9969	800.2336	776.5861	0.0000	0.0200		
3-5	75.6731	74.8206	9.1667	-0.9869	800.0736	776.7461	0.0000	0.0200		
3-5	76.6731	75.8206	9.1667	-0.9769	799.9136	776.9061	0.0000	0.0200		
3-5	77.6731	76.8205	9.1667	-0.9669	799.7536	777.0661	0.0000	0.0200		
3-5	78.6731	77.8205	9.1667	-0.9569	799.5937	777.2260	0.0000	0.0200		
3-5	79.6731	78.8204	9.1667	-0.9469	799.4338	777.3859	0.0000	0.0200		
3-5	80.6731	79.8204	9.1667	-0.9369	799.2739	777.5458	0.0000	0.0200		
3-5	81.6731	80.8203	9.1667	-0.9269	799.1141	777.7056	0.0000	0.0200		
3-5	82.6731	81.8203	9.1667	-0.9169	798.9543	777.8654	0.0000	0.0200		
3-5	83.6731	82.8202	9.1667	-0.9069	798.7945	778.0252	0.0000	0.0200		
3-5	84.6731	83.8202	9.1667	-0.8969	798.6348	778.1849	0.0000	0.0200		
3-5	85.6731	84.8201	9.1667	-0.8869	798.4750	778.3446	0.0000	0.0200		
3-5	86.6731	85.8201	9.1667	-0.8769	798.3154	778.5043	0.0000	0.0200		
3-5	87.6731	86.8200	9.1667	-0.8669	798.1557	778.6640	0.0000	0.0200		
3-5	88.6731	87.8200	9.1667	-0.8569	797.9961	778.8236	0.0000	0.0200		
3-5	89.6731	88.8199	9.1667	-0.8469	797.8365	778.9832	0.0000	0.0200		
3-5	90.6731	89.8199	9.1667	-0.8369	797.6770	779.1427	0.0000	0.0200		
3-5	91.6731	90.8198	9.1667	-0.8269	797.5174	779.3022	0.0000	0.0200		
3-5	92.6731	91.8198	9.1667	-0.8169	797.3580	779.4617	0.0000	0.0200		
3-5	93.6731	92.8197	9.1667	-0.8069	797.1985	779.6212	0.0000	0.0200		
3-5	94.6731	93.8197	9.1667	-0.7969	797.0391	779.7806	0.0000	0.0200		
3-5	95.6731	94.8196	9.1667	-0.7869	796.8797	779.9400	0.0000	0.0200		
3-5	96.6731	95.8196	9.1667	-0.7769	796.7203	780.0994	0.0000	0.0200		
3-5	97.6731	96.8195	9.1667	-0.7669	796.5610	780.2587	0.0000	0.0200		
3-5	98.6731	97.8195	9.1667	-0.7569	796.4017	780.4180	0.0000	0.0200		
3-5	99.6731	98.8194	9.1667	-0.7469	796.2424	780.5772	0.0000	0.0200		
3-5	100.6731	99.8194	9.1667	-0.7369	796.0832	780.7365	0.0000	0.0200		
3-5	101.6731	100.8193	9.1667	-0.7269	795.9240	780.8957	0.0000	0.0200		
3-5	102.6731	101.8193	9.1667	-0.7169	795.7648	781.0548	0.0000	0.0200		
3-5	103.6731	102.8192	9.1667	-0.7069	795.6057	781.2140	0.0000	0.0200		
3-5	104.6731	103.8192	9.1667	-0.6969	795.4466	781.3731	0.0000	0.0200		
3-5	105.6731	104.8191	9.1667	-0.6869	795.2875	781.5322	0.0000	0.0200		

TENDON Main Deck D6-L, Calculations

Segment	Length (ft)	X (ft)	Y (ft)	Z (ft)	Force (kips)	Force after Anchor-Set (kips)	Angle Change (deg)	Force Loss (%)	Containing Element	Additional Info.
3-5	106.6731	105.8191	9.1667	-0.6769	795.1285	781.6912	0.0000	0.0200		
3-5	107.6731	106.8190	9.1667	-0.6669	794.9695	781.8502	0.0000	0.0200		
3-5	108.6731	107.8190	9.1667	-0.6569	794.8105	782.0092	0.0000	0.0200		
3-5	109.6731	108.8189	9.1667	-0.6469	794.6515	782.1681	0.0000	0.0200		
3-5	110.6731	109.8189	9.1667	-0.6369	794.4926	782.3271	0.0000	0.0200		
3-5	111.6731	110.8188	9.1667	-0.6269	794.3337	782.4859	0.0000	0.0200		
3-5	112.6731	111.8188	9.1667	-0.6169	794.1749	782.6448	0.0000	0.0200		
3-5	113.6731	112.8187	9.1667	-0.6069	794.0161	782.8036	0.0000	0.0200		
3-5	114.6731	113.8187	9.1667	-0.5969	793.8573	782.9624	0.0000	0.0200		
3-5	115.6731	114.8186	9.1667	-0.5869	793.6985	783.1211	0.0000	0.0200		
3-5	116.6731	115.8186	9.1667	-0.5769	793.5398	783.2799	0.0000	0.0200		
3-5	117.6731	116.8185	9.1667	-0.5669	793.3811	783.4386	0.0000	0.0200		
3-5	118.6731	117.8185	9.1667	-0.5569	793.2225	783.5972	0.0000	0.0200		
3-5	119.6731	118.8184	9.1667	-0.5469	793.0638	783.7559	0.0000	0.0200		
3-5	120.6731	119.8184	9.1667	-0.5369	792.9052	783.9145	0.0000	0.0200		
3-5	121.6731	120.8183	9.1667	-0.5269	792.7467	784.0730	0.0000	0.0200		
3-5	122.6731	121.8183	9.1667	-0.5169	792.5881	784.2315	0.0000	0.0200		
3-5	123.6731	122.8182	9.1667	-0.5069	792.4296	784.3901	0.0000	0.0200		
3-5	124.6731	123.8182	9.1667	-0.4969	792.2712	784.5485	0.0000	0.0200		
3-5	125.6731	124.8181	9.1667	-0.4869	792.1127	784.7070	0.0000	0.0200		
3-5	126.6731	125.8181	9.1667	-0.4769	791.9543	784.8654	0.0000	0.0200		
3-5	127.6731	126.8180	9.1667	-0.4669	791.7959	785.0237	0.0000	0.0200		
3-5	128.6731	127.8180	9.1667	-0.4569	791.6376	785.1821	0.0000	0.0200		
3-5	129.6731	128.8179	9.1667	-0.4469	791.4793	785.3404	0.0000	0.0200		
3-5	130.6731	129.8179	9.1667	-0.4369	791.3210	785.4987	0.0000	0.0200		
3-5	131.6731	130.8178	9.1667	-0.4269	791.1628	785.6569	0.0000	0.0200		
3-5	132.6731	131.8178	9.1667	-0.4169	791.0045	785.8151	0.0000	0.0200		
3-5	133.6731	132.8177	9.1667	-0.4069	790.8464	785.9733	0.0000	0.0200		
3-5	134.6731	133.8177	9.1667	-0.3968	790.6882	786.1315	0.0000	0.0200		
3-5	135.6731	134.8176	9.1667	-0.3868	790.5301	786.2896	0.0000	0.0200		
3-5	136.6731	135.8176	9.1667	-0.3768	790.3720	786.4477	0.0000	0.0200		
3-5	137.6731	136.8175	9.1667	-0.3668	790.2139	786.6058	0.0000	0.0200		
3-5	138.6731	137.8175	9.1667	-0.3568	790.0559	786.7638	0.0000	0.0200		
3-5	139.6731	138.8174	9.1667	-0.3468	789.8979	786.9218	0.0000	0.0200		

TENDON Main Deck D6-L, Calculations

Segment	Length (ft)	X (ft)	Y (ft)	Z (ft)	Force (kips)	Force after Anchor-Set (kips)	Angle Change (deg)	Force Loss (%)	Containing Element	Additional Info.
3-5	140.6731	139.8174	9.1667	-0.3368	789.7399	787.0797	0.0000	0.0200		
3-5	141.6731	140.8173	9.1667	-0.3268	789.5820	787.2377	0.0000	0.0200		
3-5	142.6731	141.8173	9.1667	-0.3168	789.4241	787.3956	0.0000	0.0200		
3-5	143.6731	142.8172	9.1667	-0.3068	789.2662	787.5534	0.0000	0.0200		
3-5	144.6731	143.8172	9.1667	-0.2968	789.1084	787.7113	0.0000	0.0200		
3-5	145.6731	144.8171	9.1667	-0.2868	788.9506	787.8691	0.0000	0.0200		
3-5	146.6731	145.8171	9.1667	-0.2768	788.7928	788.0269	0.0000	0.0200		
3-5	147.6731	146.8170	9.1667	-0.2668	788.6351	788.1846	0.0000	0.0200		
3-5	148.6731	147.8170	9.1667	-0.2568	788.4774	788.3423	0.0000	0.0200		
3-5	149.6731	148.8169	9.1667	-0.2468	788.3197	788.3197	0.0000	0.0200		
3-5	150.6731	149.8169	9.1667	-0.2368	788.1620	788.1620	0.0000	0.0200		
3-5	151.6731	150.8168	9.1667	-0.2268	788.0044	788.0044	0.0000	0.0200		
3-5	152.6731	151.8168	9.1667	-0.2168	787.8468	787.8468	0.0000	0.0200		
3-5	153.6731	152.8167	9.1667	-0.2068	787.6893	787.6893	0.0000	0.0200		
3-5	154.6731	153.8167	9.1667	-0.1968	787.5318	787.5318	0.0000	0.0200		
3-5	155.6731	154.8166	9.1667	-0.1868	787.3743	787.3743	0.0000	0.0200		
3-5	156.6731	155.8166	9.1667	-0.1768	787.2168	787.2168	0.0000	0.0200		
3-5	157.6731	156.8165	9.1667	-0.1668	787.0594	787.0594	0.0000	0.0200		
3-5	158.6731	157.8165	9.1667	-0.1568	786.9020	786.9020	0.0000	0.0200		
3-5	159.6731	158.8164	9.1667	-0.1468	786.7446	786.7446	0.0000	0.0200		
3-5	160.6731	159.8164	9.1667	-0.1368	786.5873	786.5873	0.0000	0.0200		
3-5	161.6731	160.8163	9.1667	-0.1268	786.4300	786.4300	0.0000	0.0200		
3-5	162.6731	161.8163	9.1667	-0.1168	786.2727	786.2727	0.0000	0.0200		
3-5	163.6731	162.8162	9.1667	-0.1068	786.1155	786.1155	0.0000	0.0200		
3-5	164.6731	163.8162	9.1667	-0.0968	785.9583	785.9583	0.0000	0.0200		
3-5	165.6731	164.8161	9.1667	-0.0868	785.8011	785.8011	0.0000	0.0200		
3-5	166.6731	165.8161	9.1667	-0.0768	785.6440	785.6440	0.0000	0.0200		
3-5	167.6731	166.8160	9.1667	-0.0668	785.4868	785.4868	0.0000	0.0200		
3-5	168.6731	167.8160	9.1667	-0.0568	785.3298	785.3298	0.0000	0.0200		
3-5	169.6731	168.8159	9.1667	-0.0468	785.1727	785.1727	0.0000	0.0200		
5	170.0275	169.1703	9.1667	-0.0433	781.8823	781.8823	0.9462	0.4191		
5	170.5229	169.6657	9.1667	-0.0465	775.3758	775.3758	1.8924	0.8322		
5	171.0183	170.1607	9.1667	-0.0661	772.1046	772.1046	0.9462	0.4219		
6	171.8438	170.9850	9.1667	-0.1124	771.9771	771.9771	0.0000	0.0165		

TENDON Main Deck D6-L, Calculations

Segment	Length (ft)	X (ft)	Y (ft)	Z (ft)	Force (kips)	Force after Anchor-Set (kips)	Angle Change (deg)	Force Loss (%)	Containing Element	Additional Info.
6	172.6693	171.8092	9.1667	-0.1586	771.8497	771.8497	0.0000	0.0165		
6	173.3632	172.5019	9.1667	-0.1975	771.7426	771.7426	0.0000	0.0139		

TENDON Main Deck D6-R, Calculations

Segment	Length (ft)	X (ft)	Y (ft)	Z (ft)	Force (kips)	Force after Anchor-Set (kips)	Angle Change (deg)	Force Loss (%)
1	0.0000	-0.8302	-9.1667	-2.0558	834.8804	741.9393	0.0000	0.0000
1-3	1.0000	0.1626	-9.1667	-1.9363	834.7134	742.1063	0.0000	0.0200
1-3	2.0000	1.1554	-9.1667	-1.8168	834.5465	742.2732	0.0000	0.0200
3	2.0263	1.1815	-9.1667	-1.8136	828.8346	747.9850	1.5728	0.6844
3	2.8497	2.0014	-9.1667	-1.7377	817.4019	759.4178	3.1456	1.3794
3	3.6731	2.8242	-9.1667	-1.7069	811.6780	765.1417	1.5728	0.7003
3-5	4.6731	3.8242	-9.1667	-1.6969	811.5157	765.3040	0.0000	0.0200
3-5	5.6731	4.8241	-9.1667	-1.6869	811.3534	765.4663	0.0000	0.0200
3-5	6.6731	5.8241	-9.1667	-1.6769	811.1911	765.6285	0.0000	0.0200
3-5	7.6731	6.8240	-9.1667	-1.6669	811.0289	765.7908	0.0000	0.0200
3-5	8.6731	7.8240	-9.1667	-1.6569	810.8667	765.9530	0.0000	0.0200
3-5	9.6731	8.8239	-9.1667	-1.6469	810.7046	766.1151	0.0000	0.0200
3-5	10.6731	9.8239	-9.1667	-1.6369	810.5424	766.2772	0.0000	0.0200
3-5	11.6731	10.8238	-9.1667	-1.6269	810.3804	766.4393	0.0000	0.0200
3-5	12.6731	11.8238	-9.1667	-1.6169	810.2183	766.6014	0.0000	0.0200
3-5	13.6731	12.8237	-9.1667	-1.6069	810.0563	766.7634	0.0000	0.0200
3-5	14.6731	13.8237	-9.1667	-1.5969	809.8943	766.9254	0.0000	0.0200
3-5	15.6731	14.8236	-9.1667	-1.5869	809.7323	767.0874	0.0000	0.0200
3-5	16.6731	15.8236	-9.1667	-1.5769	809.5704	767.2493	0.0000	0.0200
3-5	17.6731	16.8235	-9.1667	-1.5669	809.4085	767.4112	0.0000	0.0200
3-5	18.6731	17.8235	-9.1667	-1.5569	809.2466	767.5731	0.0000	0.0200
3-5	19.6731	18.8234	-9.1667	-1.5469	809.0848	767.7349	0.0000	0.0200
3-5	20.6731	19.8234	-9.1667	-1.5369	808.9230	767.8967	0.0000	0.0200
3-5	21.6731	20.8233	-9.1667	-1.5269	808.7612	768.0585	0.0000	0.0200
3-5	22.6731	21.8233	-9.1667	-1.5169	808.5995	768.2202	0.0000	0.0200
3-5	23.6731	22.8232	-9.1667	-1.5069	808.4378	768.3819	0.0000	0.0200
3-5	24.6731	23.8232	-9.1667	-1.4969	808.2761	768.5436	0.0000	0.0200

TENDON Main Deck D6-R, Calculations

Segment	Length (ft)	X (ft)	Y (ft)	Z (ft)	Force (kips)	Force after Anchor-Set (kips)	Angle Change (deg)	Force Loss (%)	Containing Element	Additional Info.
3-5	25.6731	24.8231	-9.1667	-1.4869	808.1145	768.7052	0.0000	0.0200		
3-5	26.6731	25.8231	-9.1667	-1.4769	807.9529	768.8668	0.0000	0.0200		
3-5	27.6731	26.8230	-9.1667	-1.4669	807.7913	769.0284	0.0000	0.0200		
3-5	28.6731	27.8230	-9.1667	-1.4569	807.6297	769.1899	0.0000	0.0200		
3-5	29.6731	28.8229	-9.1667	-1.4469	807.4682	769.3515	0.0000	0.0200		
3-5	30.6731	29.8229	-9.1667	-1.4369	807.3068	769.5129	0.0000	0.0200		
3-5	31.6731	30.8228	-9.1667	-1.4269	807.1453	769.6744	0.0000	0.0200		
3-5	32.6731	31.8228	-9.1667	-1.4169	806.9839	769.8358	0.0000	0.0200		
3-5	33.6731	32.8227	-9.1667	-1.4069	806.8225	769.9972	0.0000	0.0200		
3-5	34.6731	33.8227	-9.1667	-1.3969	806.6612	770.1585	0.0000	0.0200		
3-5	35.6731	34.8226	-9.1667	-1.3869	806.4998	770.3198	0.0000	0.0200		
3-5	36.6731	35.8226	-9.1667	-1.3769	806.3386	770.4811	0.0000	0.0200		
3-5	37.6731	36.8225	-9.1667	-1.3669	806.1773	770.6424	0.0000	0.0200		
3-5	38.6731	37.8225	-9.1667	-1.3569	806.0161	770.8036	0.0000	0.0200		
3-5	39.6731	38.8224	-9.1667	-1.3469	805.8549	770.9648	0.0000	0.0200		
3-5	40.6731	39.8224	-9.1667	-1.3369	805.6938	771.1259	0.0000	0.0200		
3-5	41.6731	40.8223	-9.1667	-1.3269	805.5326	771.2871	0.0000	0.0200		
3-5	42.6731	41.8223	-9.1667	-1.3169	805.3715	771.4481	0.0000	0.0200		
3-5	43.6731	42.8222	-9.1667	-1.3069	805.2105	771.6092	0.0000	0.0200		
3-5	44.6731	43.8222	-9.1667	-1.2969	805.0495	771.7702	0.0000	0.0200		
3-5	45.6731	44.8221	-9.1667	-1.2869	804.8885	771.9312	0.0000	0.0200		
3-5	46.6731	45.8221	-9.1667	-1.2769	804.7275	772.0922	0.0000	0.0200		
3-5	47.6731	46.8220	-9.1667	-1.2669	804.5666	772.2531	0.0000	0.0200		
3-5	48.6731	47.8220	-9.1667	-1.2569	804.4057	772.4140	0.0000	0.0200		
3-5	49.6731	48.8219	-9.1667	-1.2469	804.2448	772.5749	0.0000	0.0200		
3-5	50.6731	49.8219	-9.1667	-1.2369	804.0840	772.7357	0.0000	0.0200		
3-5	51.6731	50.8218	-9.1667	-1.2269	803.9232	772.8965	0.0000	0.0200		
3-5	52.6731	51.8218	-9.1667	-1.2169	803.7624	773.0573	0.0000	0.0200		
3-5	53.6731	52.8217	-9.1667	-1.2069	803.6017	773.2180	0.0000	0.0200		
3-5	54.6731	53.8217	-9.1667	-1.1969	803.4410	773.3787	0.0000	0.0200		
3-5	55.6731	54.8216	-9.1667	-1.1869	803.2803	773.5394	0.0000	0.0200		
3-5	56.6731	55.8216	-9.1667	-1.1769	803.1197	773.7000	0.0000	0.0200		
3-5	57.6731	56.8215	-9.1667	-1.1669	802.9590	773.8606	0.0000	0.0200		
3-5	58.6731	57.8215	-9.1667	-1.1569	802.7985	774.0212	0.0000	0.0200		

TENDON Main Deck D6-R, Calculations

Segment	Length (ft)	X (ft)	Y (ft)	Z (ft)	Force (kips)	Force after Anchor-Set (kips)	Angle Change (deg)	Force Loss (%)	Containing Element	Additional Info.
3-5	59.6731	58.8214	-9.1667	-1.1469	802.6379	774.1818	0.0000	0.0200		
3-5	60.6731	59.8214	-9.1667	-1.1369	802.4774	774.3423	0.0000	0.0200		
3-5	61.6731	60.8213	-9.1667	-1.1269	802.3169	774.5027	0.0000	0.0200		
3-5	62.6731	61.8213	-9.1667	-1.1169	802.1565	774.6632	0.0000	0.0200		
3-5	63.6731	62.8212	-9.1667	-1.1069	801.9961	774.8236	0.0000	0.0200		
3-5	64.6731	63.8212	-9.1667	-1.0969	801.8357	774.9840	0.0000	0.0200		
3-5	65.6731	64.8211	-9.1667	-1.0869	801.6753	775.1443	0.0000	0.0200		
3-5	66.6731	65.8211	-9.1667	-1.0769	801.5150	775.3047	0.0000	0.0200		
3-5	67.6731	66.8210	-9.1667	-1.0669	801.3547	775.4650	0.0000	0.0200		
3-5	68.6731	67.8210	-9.1667	-1.0569	801.1945	775.6252	0.0000	0.0200		
3-5	69.6731	68.8209	-9.1667	-1.0469	801.0343	775.7854	0.0000	0.0200		
3-5	70.6731	69.8209	-9.1667	-1.0369	800.8741	775.9456	0.0000	0.0200		
3-5	71.6731	70.8208	-9.1667	-1.0269	800.7139	776.1058	0.0000	0.0200		
3-5	72.6731	71.8208	-9.1667	-1.0169	800.5538	776.2659	0.0000	0.0200		
3-5	73.6731	72.8207	-9.1667	-1.0069	800.3937	776.4260	0.0000	0.0200		
3-5	74.6731	73.8207	-9.1667	-0.9969	800.2336	776.5861	0.0000	0.0200		
3-5	75.6731	74.8206	-9.1667	-0.9869	800.0736	776.7461	0.0000	0.0200		
3-5	76.6731	75.8206	-9.1667	-0.9769	799.9136	776.9061	0.0000	0.0200		
3-5	77.6731	76.8205	-9.1667	-0.9669	799.7536	777.0661	0.0000	0.0200		
3-5	78.6731	77.8205	-9.1667	-0.9569	799.5937	777.2260	0.0000	0.0200		
3-5	79.6731	78.8204	-9.1667	-0.9469	799.4338	777.3859	0.0000	0.0200		
3-5	80.6731	79.8204	-9.1667	-0.9369	799.2739	777.5458	0.0000	0.0200		
3-5	81.6731	80.8203	-9.1667	-0.9269	799.1141	777.7056	0.0000	0.0200		
3-5	82.6731	81.8203	-9.1667	-0.9169	798.9543	777.8654	0.0000	0.0200		
3-5	83.6731	82.8202	-9.1667	-0.9069	798.7945	778.0252	0.0000	0.0200		
3-5	84.6731	83.8202	-9.1667	-0.8969	798.6348	778.1849	0.0000	0.0200		
3-5	85.6731	84.8201	-9.1667	-0.8869	798.4750	778.3446	0.0000	0.0200		
3-5	86.6731	85.8201	-9.1667	-0.8769	798.3154	778.5043	0.0000	0.0200		
3-5	87.6731	86.8200	-9.1667	-0.8669	798.1557	778.6640	0.0000	0.0200		
3-5	88.6731	87.8200	-9.1667	-0.8569	797.9961	778.8236	0.0000	0.0200		
3-5	89.6731	88.8199	-9.1667	-0.8469	797.8365	778.9832	0.0000	0.0200		
3-5	90.6731	89.8199	-9.1667	-0.8369	797.6770	779.1427	0.0000	0.0200		
3-5	91.6731	90.8198	-9.1667	-0.8269	797.5174	779.3022	0.0000	0.0200		
3-5	92.6731	91.8198	-9.1667	-0.8169	797.3580	779.4617	0.0000	0.0200		

TENDON Main Deck D6-R, Calculations

Segment	Length (ft)	X (ft)	Y (ft)	Z (ft)	Force (kips)	Force after Anchor-Set (kips)	Angle Change (deg)	Force Loss (%)	Containing Element	Additional Info.
3-5	93.6731	92.8197	-9.1667	-0.8069	797.1985	779.6212	0.0000	0.0200		
3-5	94.6731	93.8197	-9.1667	-0.7969	797.0391	779.7806	0.0000	0.0200		
3-5	95.6731	94.8196	-9.1667	-0.7869	796.8797	779.9400	0.0000	0.0200		
3-5	96.6731	95.8196	-9.1667	-0.7769	796.7203	780.0994	0.0000	0.0200		
3-5	97.6731	96.8195	-9.1667	-0.7669	796.5610	780.2587	0.0000	0.0200		
3-5	98.6731	97.8195	-9.1667	-0.7569	796.4017	780.4180	0.0000	0.0200		
3-5	99.6731	98.8194	-9.1667	-0.7469	796.2424	780.5772	0.0000	0.0200		
3-5	100.6731	99.8194	-9.1667	-0.7369	796.0832	780.7365	0.0000	0.0200		
3-5	101.6731	100.8193	-9.1667	-0.7269	795.9240	780.8957	0.0000	0.0200		
3-5	102.6731	101.8193	-9.1667	-0.7169	795.7648	781.0548	0.0000	0.0200		
3-5	103.6731	102.8192	-9.1667	-0.7069	795.6057	781.2140	0.0000	0.0200		
3-5	104.6731	103.8192	-9.1667	-0.6969	795.4466	781.3731	0.0000	0.0200		
3-5	105.6731	104.8191	-9.1667	-0.6869	795.2875	781.5322	0.0000	0.0200		
3-5	106.6731	105.8191	-9.1667	-0.6769	795.1285	781.6912	0.0000	0.0200		
3-5	107.6731	106.8190	-9.1667	-0.6669	794.9695	781.8502	0.0000	0.0200		
3-5	108.6731	107.8190	-9.1667	-0.6569	794.8105	782.0092	0.0000	0.0200		
3-5	109.6731	108.8189	-9.1667	-0.6469	794.6515	782.1681	0.0000	0.0200		
3-5	110.6731	109.8189	-9.1667	-0.6369	794.4926	782.3271	0.0000	0.0200		
3-5	111.6731	110.8188	-9.1667	-0.6269	794.3337	782.4859	0.0000	0.0200		
3-5	112.6731	111.8188	-9.1667	-0.6169	794.1749	782.6448	0.0000	0.0200		
3-5	113.6731	112.8187	-9.1667	-0.6069	794.0161	782.8036	0.0000	0.0200		
3-5	114.6731	113.8187	-9.1667	-0.5969	793.8573	782.9624	0.0000	0.0200		
3-5	115.6731	114.8186	-9.1667	-0.5869	793.6985	783.1211	0.0000	0.0200		
3-5	116.6731	115.8186	-9.1667	-0.5769	793.5398	783.2799	0.0000	0.0200		
3-5	117.6731	116.8185	-9.1667	-0.5669	793.3811	783.4386	0.0000	0.0200		
3-5	118.6731	117.8185	-9.1667	-0.5569	793.2225	783.5972	0.0000	0.0200		
3-5	119.6731	118.8184	-9.1667	-0.5469	793.0638	783.7559	0.0000	0.0200		
3-5	120.6731	119.8184	-9.1667	-0.5369	792.9052	783.9145	0.0000	0.0200		
3-5	121.6731	120.8183	-9.1667	-0.5269	792.7467	784.0730	0.0000	0.0200		
3-5	122.6731	121.8183	-9.1667	-0.5169	792.5881	784.2315	0.0000	0.0200		
3-5	123.6731	122.8182	-9.1667	-0.5069	792.4296	784.3901	0.0000	0.0200		
3-5	124.6731	123.8182	-9.1667	-0.4969	792.2712	784.5485	0.0000	0.0200		
3-5	125.6731	124.8181	-9.1667	-0.4869	792.1127	784.7070	0.0000	0.0200		
3-5	126.6731	125.8181	-9.1667	-0.4769	791.9543	784.8654	0.0000	0.0200		

TENDON Main Deck D6-R, Calculations

Segment	Length (ft)	X (ft)	Y (ft)	Z (ft)	Force (kips)	Force after Anchor-Set (kips)	Angle Change (deg)	Force Loss (%)	Containing Element	Additional Info.
3-5	127.6731	126.8180	-9.1667	-0.4669	791.7959	785.0237	0.0000	0.0200		
3-5	128.6731	127.8180	-9.1667	-0.4569	791.6376	785.1821	0.0000	0.0200		
3-5	129.6731	128.8179	-9.1667	-0.4469	791.4793	785.3404	0.0000	0.0200		
3-5	130.6731	129.8179	-9.1667	-0.4369	791.3210	785.4987	0.0000	0.0200		
3-5	131.6731	130.8178	-9.1667	-0.4269	791.1628	785.6569	0.0000	0.0200		
3-5	132.6731	131.8178	-9.1667	-0.4169	791.0045	785.8151	0.0000	0.0200		
3-5	133.6731	132.8177	-9.1667	-0.4069	790.8464	785.9733	0.0000	0.0200		
3-5	134.6731	133.8177	-9.1667	-0.3968	790.6882	786.1315	0.0000	0.0200		
3-5	135.6731	134.8176	-9.1667	-0.3868	790.5301	786.2896	0.0000	0.0200		
3-5	136.6731	135.8176	-9.1667	-0.3768	790.3720	786.4477	0.0000	0.0200		
3-5	137.6731	136.8175	-9.1667	-0.3668	790.2139	786.6058	0.0000	0.0200		
3-5	138.6731	137.8175	-9.1667	-0.3568	790.0559	786.7638	0.0000	0.0200		
3-5	139.6731	138.8174	-9.1667	-0.3468	789.8979	786.9218	0.0000	0.0200		
3-5	140.6731	139.8174	-9.1667	-0.3368	789.7399	787.0797	0.0000	0.0200		
3-5	141.6731	140.8173	-9.1667	-0.3268	789.5820	787.2377	0.0000	0.0200		
3-5	142.6731	141.8173	-9.1667	-0.3168	789.4241	787.3956	0.0000	0.0200		
3-5	143.6731	142.8172	-9.1667	-0.3068	789.2662	787.5534	0.0000	0.0200		
3-5	144.6731	143.8172	-9.1667	-0.2968	789.1084	787.7113	0.0000	0.0200		
3-5	145.6731	144.8171	-9.1667	-0.2868	788.9506	787.8691	0.0000	0.0200		
3-5	146.6731	145.8171	-9.1667	-0.2768	788.7928	788.0269	0.0000	0.0200		
3-5	147.6731	146.8170	-9.1667	-0.2668	788.6351	788.1846	0.0000	0.0200		
3-5	148.6731	147.8170	-9.1667	-0.2568	788.4774	788.3423	0.0000	0.0200		
3-5	149.6731	148.8169	-9.1667	-0.2468	788.3197	788.3197	0.0000	0.0200		
3-5	150.6731	149.8169	-9.1667	-0.2368	788.1620	788.1620	0.0000	0.0200		
3-5	151.6731	150.8168	-9.1667	-0.2268	788.0044	788.0044	0.0000	0.0200		
3-5	152.6731	151.8168	-9.1667	-0.2168	787.8468	787.8468	0.0000	0.0200		
3-5	153.6731	152.8167	-9.1667	-0.2068	787.6893	787.6893	0.0000	0.0200		
3-5	154.6731	153.8167	-9.1667	-0.1968	787.5318	787.5318	0.0000	0.0200		
3-5	155.6731	154.8166	-9.1667	-0.1868	787.3743	787.3743	0.0000	0.0200		
3-5	156.6731	155.8166	-9.1667	-0.1768	787.2168	787.2168	0.0000	0.0200		
3-5	157.6731	156.8165	-9.1667	-0.1668	787.0594	787.0594	0.0000	0.0200		
3-5	158.6731	157.8165	-9.1667	-0.1568	786.9020	786.9020	0.0000	0.0200		
3-5	159.6731	158.8164	-9.1667	-0.1468	786.7446	786.7446	0.0000	0.0200		
3-5	160.6731	159.8164	-9.1667	-0.1368	786.5873	786.5873	0.0000	0.0200		

TENDON Main Deck D6-R, Calculations

Segment	Length (ft)	X (ft)	Y (ft)	Z (ft)	Force (kips)	Force after Anchor-Set (kips)	Angle Change (deg)	Force Loss (%)	Containing Element	Additional Info.
3-5	161.6731	160.8163	-9.1667	-0.1268	786.4300	786.4300	0.0000	0.0200		
3-5	162.6731	161.8163	-9.1667	-0.1168	786.2727	786.2727	0.0000	0.0200		
3-5	163.6731	162.8162	-9.1667	-0.1068	786.1155	786.1155	0.0000	0.0200		
3-5	164.6731	163.8162	-9.1667	-0.0968	785.9583	785.9583	0.0000	0.0200		
3-5	165.6731	164.8161	-9.1667	-0.0868	785.8011	785.8011	0.0000	0.0200		
3-5	166.6731	165.8161	-9.1667	-0.0768	785.6440	785.6440	0.0000	0.0200		
3-5	167.6731	166.8160	-9.1667	-0.0668	785.4868	785.4868	0.0000	0.0200		
3-5	168.6731	167.8160	-9.1667	-0.0568	785.3298	785.3298	0.0000	0.0200		
3-5	169.6731	168.8159	-9.1667	-0.0468	785.1727	785.1727	0.0000	0.0200		
5	170.0275	169.1703	-9.1667	-0.0433	781.8823	781.8823	0.9462	0.4191		
5	170.5229	169.6657	-9.1667	-0.0465	775.3758	775.3758	1.8924	0.8322		
5	171.0183	170.1607	-9.1667	-0.0661	772.1046	772.1046	0.9462	0.4219		
6	171.8438	170.9850	-9.1667	-0.1124	771.9771	771.9771	0.0000	0.0165		
6	172.6693	171.8092	-9.1667	-0.1586	771.8497	771.8497	0.0000	0.0165		
6	173.3632	172.5019	-9.1667	-0.1975	771.7426	771.7426	0.0000	0.0139		

TENDON Main Canopy C2-L, Calculations

Segment	Length (ft)	X (ft)	Y (ft)	Z (ft)	Force (kips)	Force after Anchor-Set (kips)	Angle Change (deg)	Force Loss (%)
1	0.0000	-0.8370	2.4167	14.4441	530.6343	419.6045	0.0000	0.0000
1-2	1.0000	0.1574	2.4167	14.3388	530.5282	419.7106	0.0000	0.0200
2	1.4815	0.6362	2.4167	14.2881	526.6598	423.5790	1.6551	0.7291
2	2.3480	1.5002	2.4167	14.2217	519.0176	431.2212	3.3103	1.4511
2	3.2145	2.3665	2.4167	14.2053	515.1935	435.0453	1.6551	0.7368
3	4.1060	3.2580	2.4167	14.2142	515.1016	435.1372	0.0000	0.0178
3	4.9976	4.1496	2.4167	14.2232	515.0098	435.2290	0.0000	0.0178
3	5.8892	5.0411	2.4167	14.2321	514.9180	435.3208	0.0000	0.0178
3	6.7807	5.9326	2.4167	14.2410	514.8262	435.4126	0.0000	0.0178
3	7.6723	6.8241	2.4167	14.2499	514.7344	435.5044	0.0000	0.0178
3	8.5638	7.7156	2.4167	14.2588	514.6426	435.5962	0.0000	0.0178
3	9.4554	8.6071	2.4167	14.2677	514.5508	435.6880	0.0000	0.0178
3	10.3469	9.4986	2.4167	14.2766	514.4591	435.7797	0.0000	0.0178
3	10.3470	9.4987	2.4167	14.2766	499.8175	450.4213	6.6172	2.8460

TENDON Main Canopy C2-L, Calculations

Segment	Length (ft)	X (ft)	Y (ft)	Z (ft)	Force (kips)	Force after Anchor-Set (kips)	Angle Change (deg)	Force Loss (%)	Containing Element	Additional Info.
4	11.3470	10.4921	2.5314	14.2764	499.7176	450.5212	0.0000	0.0200		
4	12.3470	11.4855	2.6462	14.2761	499.6177	450.6211	0.0000	0.0200		
4	13.3470	12.4789	2.7610	14.2758	499.5177	450.7211	0.0000	0.0200		
4	14.3470	13.4723	2.8758	14.2755	499.4178	450.8209	0.0000	0.0200		
4	15.3470	14.4657	2.9906	14.2752	499.3180	450.9208	0.0000	0.0200		
4	16.3470	15.4591	3.1054	14.2749	499.2181	451.0207	0.0000	0.0200		
4	17.3470	16.4524	3.2201	14.2746	499.1183	451.1205	0.0000	0.0200		
4	18.3470	17.4458	3.3349	14.2743	499.0185	451.2203	0.0000	0.0200		
4	19.3470	18.4392	3.4497	14.2741	498.9187	451.3201	0.0000	0.0200		
4	20.3470	19.4326	3.5645	14.2738	498.8189	451.4199	0.0000	0.0200		
4	20.5113	19.5958	3.5833	14.2737	484.6066	465.6322	6.6172	2.8492		
4-6	21.5113	20.5958	3.5833	14.2837	484.5097	465.7291	0.0000	0.0200		
4-6	22.5113	21.5957	3.5833	14.2937	484.4128	465.8260	0.0000	0.0200		
4-6	23.5113	22.5957	3.5833	14.3037	484.3159	465.9229	0.0000	0.0200		
4-6	24.5113	23.5956	3.5833	14.3137	484.2191	466.0197	0.0000	0.0200		
4-6	25.5113	24.5956	3.5833	14.3237	484.1222	466.1166	0.0000	0.0200		
4-6	26.5113	25.5955	3.5833	14.3337	484.0254	466.2134	0.0000	0.0200		
4-6	27.5113	26.5955	3.5833	14.3437	483.9286	466.3102	0.0000	0.0200		
4-6	28.5113	27.5954	3.5833	14.3537	483.8318	466.4070	0.0000	0.0200		
4-6	29.5113	28.5954	3.5833	14.3637	483.7351	466.5037	0.0000	0.0200		
4-6	30.5113	29.5953	3.5833	14.3737	483.6383	466.6005	0.0000	0.0200		
4-6	31.5113	30.5953	3.5833	14.3837	483.5416	466.6972	0.0000	0.0200		
4-6	32.5113	31.5952	3.5833	14.3937	483.4449	466.7939	0.0000	0.0200		
4-6	33.5113	32.5952	3.5833	14.4037	483.3482	466.8906	0.0000	0.0200		
4-6	34.5113	33.5951	3.5833	14.4137	483.2516	466.9872	0.0000	0.0200		
4-6	35.5113	34.5951	3.5833	14.4237	483.1549	467.0839	0.0000	0.0200		
4-6	36.5113	35.5950	3.5833	14.4337	483.0583	467.1805	0.0000	0.0200		
4-6	37.5113	36.5950	3.5833	14.4437	482.9617	467.2771	0.0000	0.0200		
4-6	38.5113	37.5949	3.5833	14.4537	482.8651	467.3737	0.0000	0.0200		
4-6	39.5113	38.5949	3.5833	14.4637	482.7686	467.4702	0.0000	0.0200		
4-6	40.5113	39.5948	3.5833	14.4737	482.6720	467.5668	0.0000	0.0200		
4-6	41.5113	40.5948	3.5833	14.4837	482.5755	467.6633	0.0000	0.0200		
4-6	42.5113	41.5947	3.5833	14.4937	482.4790	467.7598	0.0000	0.0200		
4-6	43.5113	42.5947	3.5833	14.5037	482.3825	467.8563	0.0000	0.0200		

TENDON Main Canopy C2-L, Calculations

Segment	Length (ft)	X (ft)	Y (ft)	Z (ft)	Force (kips)	Force after Anchor-Set (kips)	Angle Change (deg)	Force Loss (%)	Containing Element	Additional Info.
4-6	44.5113	43.5946	3.5833	14.5137	482.2860	467.9528	0.0000	0.0200		
4-6	45.5113	44.5946	3.5833	14.5237	482.1896	468.0492	0.0000	0.0200		
4-6	46.5113	45.5945	3.5833	14.5337	482.0932	468.1456	0.0000	0.0200		
4-6	47.5113	46.5945	3.5833	14.5437	481.9968	468.2420	0.0000	0.0200		
4-6	48.5113	47.5944	3.5833	14.5537	481.9004	468.3384	0.0000	0.0200		
4-6	49.5113	48.5944	3.5833	14.5637	481.8040	468.4348	0.0000	0.0200		
4-6	50.5113	49.5943	3.5833	14.5736	481.7076	468.5311	0.0000	0.0200		
4-6	51.5113	50.5943	3.5833	14.5836	481.6113	468.6275	0.0000	0.0200		
4-6	52.5113	51.5942	3.5833	14.5936	481.5150	468.7238	0.0000	0.0200		
4-6	53.5113	52.5942	3.5833	14.6036	481.4187	468.8201	0.0000	0.0200		
4-6	54.5113	53.5941	3.5833	14.6136	481.3224	468.9164	0.0000	0.0200		
4-6	55.5113	54.5941	3.5833	14.6236	481.2262	469.0126	0.0000	0.0200		
4-6	56.5113	55.5940	3.5833	14.6336	481.1299	469.1088	0.0000	0.0200		
4-6	57.5113	56.5940	3.5833	14.6436	481.0337	469.2051	0.0000	0.0200		
4-6	58.5113	57.5939	3.5833	14.6536	480.9375	469.3013	0.0000	0.0200		
4-6	59.5113	58.5939	3.5833	14.6636	480.8414	469.3974	0.0000	0.0200		
4-6	60.5113	59.5938	3.5833	14.6736	480.7452	469.4936	0.0000	0.0200		
4-6	61.5113	60.5938	3.5833	14.6836	480.6491	469.5897	0.0000	0.0200		
4-6	62.5113	61.5937	3.5833	14.6936	480.5529	469.6859	0.0000	0.0200		
4-6	63.5113	62.5937	3.5833	14.7036	480.4568	469.7820	0.0000	0.0200		
4-6	64.5113	63.5936	3.5833	14.7136	480.3608	469.8780	0.0000	0.0200		
4-6	65.5113	64.5936	3.5833	14.7236	480.2647	469.9741	0.0000	0.0200		
4-6	66.5113	65.5935	3.5833	14.7336	480.1686	470.0701	0.0000	0.0200		
4-6	67.5113	66.5935	3.5833	14.7436	480.0726	470.1662	0.0000	0.0200		
4-6	68.5113	67.5934	3.5833	14.7536	479.9766	470.2622	0.0000	0.0200		
4-6	69.5113	68.5934	3.5833	14.7636	479.8806	470.3582	0.0000	0.0200		
4-6	70.5113	69.5933	3.5833	14.7736	479.7847	470.4541	0.0000	0.0200		
4-6	71.5113	70.5933	3.5833	14.7836	479.6887	470.5501	0.0000	0.0200		
4-6	72.5113	71.5932	3.5833	14.7936	479.5928	470.6460	0.0000	0.0200		
4-6	73.5113	72.5932	3.5833	14.8036	479.4969	470.7419	0.0000	0.0200		
4-6	74.5113	73.5931	3.5833	14.8136	479.4010	470.8378	0.0000	0.0200		
4-6	75.5113	74.5931	3.5833	14.8236	479.3051	470.9337	0.0000	0.0200		
4-6	76.5113	75.5930	3.5833	14.8336	479.2093	471.0295	0.0000	0.0200		
4-6	77.5113	76.5930	3.5833	14.8436	479.1134	471.1254	0.0000	0.0200		

TENDON Main Canopy C2-L, Calculations

Segment	Length (ft)	X (ft)	Y (ft)	Z (ft)	Force (kips)	Force after Anchor-Set (kips)	Angle Change (deg)	Force Loss (%)	Containing Element	Additional Info.
4-6	78.5113	77.5929	3.5833	14.8536	479.0176	471.2212	0.0000	0.0200		
4-6	79.5113	78.5929	3.5833	14.8636	478.9218	471.3170	0.0000	0.0200		
4-6	80.5113	79.5928	3.5833	14.8736	478.8261	471.4127	0.0000	0.0200		
4-6	81.5113	80.5928	3.5833	14.8836	478.7303	471.5085	0.0000	0.0200		
4-6	82.5113	81.5927	3.5833	14.8936	478.6346	471.6042	0.0000	0.0200		
4-6	83.5113	82.5927	3.5833	14.9036	478.5388	471.6999	0.0000	0.0200		
4-6	84.5113	83.5926	3.5833	14.9136	478.4431	471.7956	0.0000	0.0200		
4-6	85.5113	84.5926	3.5833	14.9236	478.3475	471.8913	0.0000	0.0200		
4-6	86.5113	85.5925	3.5833	14.9336	478.2518	471.9870	0.0000	0.0200		
4-6	87.5113	86.5925	3.5833	14.9436	478.1562	472.0826	0.0000	0.0200		
4-6	88.5113	87.5924	3.5833	14.9536	478.0605	472.1782	0.0000	0.0200		
4-6	89.5113	88.5924	3.5833	14.9636	477.9649	472.2739	0.0000	0.0200		
4-6	90.5113	89.5923	3.5833	14.9736	477.8694	472.3694	0.0000	0.0200		
4-6	91.5113	90.5923	3.5833	14.9836	477.7738	472.4650	0.0000	0.0200		
4-6	92.5113	91.5922	3.5833	14.9936	477.6783	472.5605	0.0000	0.0200		
4-6	93.5113	92.5922	3.5833	15.0035	477.5827	472.6561	0.0000	0.0200		
4-6	94.5113	93.5921	3.5833	15.0135	477.4872	472.7516	0.0000	0.0200		
4-6	95.5113	94.5921	3.5833	15.0235	477.3917	472.8471	0.0000	0.0200		
4-6	96.5113	95.5920	3.5833	15.0335	477.2963	472.9425	0.0000	0.0200		
4-6	97.5113	96.5920	3.5833	15.0435	477.2008	473.0380	0.0000	0.0200		
4-6	98.5113	97.5919	3.5833	15.0535	477.1054	473.1334	0.0000	0.0200		
4-6	99.5113	98.5919	3.5833	15.0635	477.0100	473.2288	0.0000	0.0200		
4-6	100.5113	99.5918	3.5833	15.0735	476.9146	473.3242	0.0000	0.0200		
4-6	101.5113	100.5918	3.5833	15.0835	476.8192	473.4196	0.0000	0.0200		
4-6	102.5113	101.5917	3.5833	15.0935	476.7238	473.5149	0.0000	0.0200		
4-6	103.5113	102.5917	3.5833	15.1035	476.6285	473.6103	0.0000	0.0200		
4-6	104.5113	103.5916	3.5833	15.1135	476.5332	473.7056	0.0000	0.0200		
4-6	105.5113	104.5916	3.5833	15.1235	476.4379	473.8009	0.0000	0.0200		
4-6	106.5113	105.5915	3.5833	15.1335	476.3426	473.8962	0.0000	0.0200		
4-6	107.5113	106.5915	3.5833	15.1435	476.2474	473.9914	0.0000	0.0200		
4-6	108.5113	107.5914	3.5833	15.1535	476.1521	474.0867	0.0000	0.0200		
4-6	109.5113	108.5914	3.5833	15.1635	476.0569	474.1819	0.0000	0.0200		
4-6	110.5113	109.5913	3.5833	15.1735	475.9617	474.2771	0.0000	0.0200		
4-6	111.5113	110.5913	3.5833	15.1835	475.8665	474.3723	0.0000	0.0200		

TENDON Main Canopy C2-L, Calculations

Segment	Length (ft)	X (ft)	Y (ft)	Z (ft)	Force (kips)	Force after Anchor-Set (kips)	Angle Change (deg)	Force Loss (%)	Containing Element	Additional Info.
4-6	112.5113	111.5912	3.5833	15.1935	475.7714	474.4674	0.0000	0.0200		
4-6	113.5113	112.5912	3.5833	15.2035	475.6762	474.5626	0.0000	0.0200		
4-6	114.5113	113.5911	3.5833	15.2135	475.5811	474.6577	0.0000	0.0200		
4-6	115.5113	114.5911	3.5833	15.2235	475.4860	474.7528	0.0000	0.0200		
4-6	116.5113	115.5910	3.5833	15.2335	475.3909	474.8479	0.0000	0.0200		
4-6	117.5113	116.5910	3.5833	15.2435	475.2958	474.9430	0.0000	0.0200		
4-6	118.5113	117.5909	3.5833	15.2535	475.2008	475.0380	0.0000	0.0200		
4-6	119.5113	118.5909	3.5833	15.2635	475.1057	475.1057	0.0000	0.0200		
4-6	120.5113	119.5908	3.5833	15.2735	475.0107	475.0107	0.0000	0.0200		
4-6	121.5113	120.5908	3.5833	15.2835	474.9157	474.9157	0.0000	0.0200		
4-6	122.5113	121.5907	3.5833	15.2935	474.8208	474.8208	0.0000	0.0200		
4-6	123.5113	122.5907	3.5833	15.3035	474.7258	474.7258	0.0000	0.0200		
4-6	124.5113	123.5906	3.5833	15.3135	474.6309	474.6309	0.0000	0.0200		
4-6	125.5113	124.5906	3.5833	15.3235	474.5360	474.5360	0.0000	0.0200		
4-6	126.5113	125.5905	3.5833	15.3335	474.4411	474.4411	0.0000	0.0200		
4-6	127.5113	126.5905	3.5833	15.3435	474.3462	474.3462	0.0000	0.0200		
4-6	128.5113	127.5904	3.5833	15.3535	474.2513	474.2513	0.0000	0.0200		
4-6	129.5113	128.5904	3.5833	15.3635	474.1565	474.1565	0.0000	0.0200		
4-6	130.5113	129.5903	3.5833	15.3735	474.0617	474.0617	0.0000	0.0200		
4-6	131.5113	130.5903	3.5833	15.3835	473.9669	473.9669	0.0000	0.0200		
4-6	132.5113	131.5902	3.5833	15.3935	473.8721	473.8721	0.0000	0.0200		
4-6	133.5113	132.5902	3.5833	15.4035	473.7773	473.7773	0.0000	0.0200		
4-6	134.5113	133.5901	3.5833	15.4135	473.6826	473.6826	0.0000	0.0200		
4-6	135.5113	134.5901	3.5833	15.4234	473.5878	473.5878	0.0000	0.0200		
4-6	136.5113	135.5900	3.5833	15.4334	473.4931	473.4931	0.0000	0.0200		
4-6	137.5113	136.5900	3.5833	15.4434	473.3984	473.3984	0.0000	0.0200		
4-6	138.5113	137.5899	3.5833	15.4534	473.3038	473.3038	0.0000	0.0200		
4-6	139.5113	138.5899	3.5833	15.4634	473.2091	473.2091	0.0000	0.0200		
4-6	140.5113	139.5898	3.5833	15.4734	473.1145	473.1145	0.0000	0.0200		
4-6	141.5113	140.5898	3.5833	15.4834	473.0199	473.0199	0.0000	0.0200		
4-6	142.5113	141.5897	3.5833	15.4934	472.9253	472.9253	0.0000	0.0200		
4-6	143.5113	142.5897	3.5833	15.5034	472.8307	472.8307	0.0000	0.0200		
4-6	144.5113	143.5896	3.5833	15.5134	472.7361	472.7361	0.0000	0.0200		
4-6	145.5113	144.5896	3.5833	15.5234	472.6416	472.6416	0.0000	0.0200		

TENDON Main Canopy C2-L, Calculations

Segment	Length (ft)	X (ft)	Y (ft)	Z (ft)	Force (kips)	Force after Anchor-Set (kips)	Angle Change (deg)	Force Loss (%)	Containing Element	Additional Info.
4-6	146.5113	145.5895	3.5833	15.5334	472.5471	472.5471	0.0000	0.0200		
4-6	147.5113	146.5895	3.5833	15.5434	472.4526	472.4526	0.0000	0.0200		
4-6	148.5113	147.5894	3.5833	15.5534	472.3581	472.3581	0.0000	0.0200		
4-6	149.5113	148.5894	3.5833	15.5634	472.2636	472.2636	0.0000	0.0200		
4-6	150.5113	149.5893	3.5833	15.5734	472.1692	472.1692	0.0000	0.0200		
4-6	151.5113	150.5893	3.5833	15.5834	472.0748	472.0748	0.0000	0.0200		
4-6	152.5113	151.5892	3.5833	15.5934	471.9804	471.9804	0.0000	0.0200		
4-6	153.5113	152.5892	3.5833	15.6034	471.8860	471.8860	0.0000	0.0200		
4-6	154.5113	153.5891	3.5833	15.6134	471.7916	471.7916	0.0000	0.0200		
4-6	155.5113	154.5891	3.5833	15.6234	471.6973	471.6973	0.0000	0.0200		
4-6	156.5113	155.5890	3.5833	15.6334	471.6029	471.6029	0.0000	0.0200		
4-6	157.5113	156.5890	3.5833	15.6434	471.5086	471.5086	0.0000	0.0200		
4-6	158.5113	157.5889	3.5833	15.6534	471.4143	471.4143	0.0000	0.0200		
4-6	159.5113	158.5889	3.5833	15.6634	471.3201	471.3201	0.0000	0.0200		
4-6	160.5113	159.5888	3.5833	15.6734	471.2258	471.2258	0.0000	0.0200		
4-6	161.5113	160.5888	3.5833	15.6834	471.1316	471.1316	0.0000	0.0200		
4-6	162.5113	161.5887	3.5833	15.6934	471.0373	471.0373	0.0000	0.0200		
4-6	163.5113	162.5887	3.5833	15.7034	470.9432	470.9432	0.0000	0.0200		
4-6	164.5113	163.5886	3.5833	15.7134	470.8490	470.8490	0.0000	0.0200		
4-6	165.5113	164.5886	3.5833	15.7234	470.7548	470.7548	0.0000	0.0200		
4-6	166.5113	165.5885	3.5833	15.7334	470.6607	470.6607	0.0000	0.0200		
4-6	167.5113	166.5885	3.5833	15.7434	470.5665	470.5665	0.0000	0.0200		
4-6	168.5113	167.5884	3.5833	15.7534	470.4724	470.4724	0.0000	0.0200		
4-6	169.5113	168.5884	3.5833	15.7634	470.3784	470.3784	0.0000	0.0200		
4-6	170.5113	169.5883	3.5833	15.7734	470.2843	470.2843	0.0000	0.0200		
6	170.7749	169.8519	3.5833	15.7760	466.4695	466.4695	1.8546	0.8112		
6	171.4221	170.4985	3.5833	15.8034	458.9215	458.9215	3.7091	1.6181		
6	172.0694	171.1421	3.5833	15.8726	455.1640	455.1640	1.8546	0.8188		
7	172.7480	171.8141	3.5833	15.9669	455.1022	455.1022	0.0000	0.0136		
7	173.4266	172.4861	3.5833	16.0613	455.0404	455.0404	0.0000	0.0136		
7	173.4381	172.4976	3.5833	16.0629	455.0394	455.0394	0.0000	0.0002		

TENDON Main Canopy C2-R, Calculations

Segment	Length (ft)	X (ft)	Y (ft)	Z (ft)	Force (kips)	Force after Anchor-Set (kips)	Angle Change (deg)	Force Loss (%)
1	0.0000	-0.8370	-2.4167	14.4441	530.6343	419.6045	0.0000	0.0000
1-2	1.0000	0.1574	-2.4167	14.3388	530.5282	419.7106	0.0000	0.0200
2	1.4815	0.6362	-2.4167	14.2881	526.6598	423.5790	1.6551	0.7291
2	2.3480	1.5002	-2.4167	14.2217	519.0176	431.2212	3.3103	1.4511
2	3.2145	2.3665	-2.4167	14.2053	515.1935	435.0453	1.6551	0.7368
3	4.1060	3.2580	-2.4167	14.2142	515.1016	435.1372	0.0000	0.0178
3	4.9976	4.1496	-2.4167	14.2232	515.0098	435.2290	0.0000	0.0178
3	5.8892	5.0411	-2.4167	14.2321	514.9180	435.3208	0.0000	0.0178
3	6.7807	5.9326	-2.4167	14.2410	514.8262	435.4126	0.0000	0.0178
3	7.6723	6.8241	-2.4167	14.2499	514.7344	435.5044	0.0000	0.0178
3	8.5638	7.7156	-2.4167	14.2588	514.6426	435.5962	0.0000	0.0178
3	9.4554	8.6071	-2.4167	14.2677	514.5508	435.6880	0.0000	0.0178
3	10.3469	9.4986	-2.4167	14.2766	514.4591	435.7797	0.0000	0.0178
3	10.3470	9.4987	-2.4167	14.2766	499.8175	450.4213	6.6172	2.8460
4	11.3470	10.4921	-2.5314	14.2764	499.7176	450.5212	0.0000	0.0200
4	12.3470	11.4855	-2.6462	14.2761	499.6177	450.6211	0.0000	0.0200
4	13.3470	12.4789	-2.7610	14.2758	499.5177	450.7211	0.0000	0.0200
4	14.3470	13.4723	-2.8758	14.2755	499.4178	450.8209	0.0000	0.0200
4	15.3470	14.4657	-2.9906	14.2752	499.3180	450.9208	0.0000	0.0200
4	16.3470	15.4591	-3.1054	14.2749	499.2181	451.0207	0.0000	0.0200
4	17.3470	16.4524	-3.2201	14.2746	499.1183	451.1205	0.0000	0.0200
4	18.3470	17.4458	-3.3349	14.2743	499.0185	451.2203	0.0000	0.0200
4	19.3470	18.4392	-3.4497	14.2741	498.9187	451.3201	0.0000	0.0200
4	20.3470	19.4326	-3.5645	14.2738	498.8189	451.4199	0.0000	0.0200
4	20.5113	19.5958	-3.5833	14.2737	484.6066	465.6322	6.6172	2.8492
4-6	21.5113	20.5958	-3.5833	14.2837	484.5097	465.7291	0.0000	0.0200
4-6	22.5113	21.5957	-3.5833	14.2937	484.4128	465.8260	0.0000	0.0200
4-6	23.5113	22.5957	-3.5833	14.3037	484.3159	465.9229	0.0000	0.0200
4-6	24.5113	23.5956	-3.5833	14.3137	484.2191	466.0197	0.0000	0.0200
4-6	25.5113	24.5956	-3.5833	14.3237	484.1222	466.1166	0.0000	0.0200
4-6	26.5113	25.5955	-3.5833	14.3337	484.0254	466.2134	0.0000	0.0200
4-6	27.5113	26.5955	-3.5833	14.3437	483.9286	466.3102	0.0000	0.0200

TENDON Main Canopy C2-R, Calculations

Segment	Length (ft)	X (ft)	Y (ft)	Z (ft)	Force (kips)	Force after Anchor-Set (kips)	Angle Change (deg)	Force Loss (%)	Containing Element	Additional Info.
4-6	28.5113	27.5954	-3.5833	14.3537	483.8318	466.4070	0.0000	0.0200		
4-6	29.5113	28.5954	-3.5833	14.3637	483.7351	466.5037	0.0000	0.0200		
4-6	30.5113	29.5953	-3.5833	14.3737	483.6383	466.6005	0.0000	0.0200		
4-6	31.5113	30.5953	-3.5833	14.3837	483.5416	466.6972	0.0000	0.0200		
4-6	32.5113	31.5952	-3.5833	14.3937	483.4449	466.7939	0.0000	0.0200		
4-6	33.5113	32.5952	-3.5833	14.4037	483.3482	466.8906	0.0000	0.0200		
4-6	34.5113	33.5951	-3.5833	14.4137	483.2516	466.9872	0.0000	0.0200		
4-6	35.5113	34.5951	-3.5833	14.4237	483.1549	467.0839	0.0000	0.0200		
4-6	36.5113	35.5950	-3.5833	14.4337	483.0583	467.1805	0.0000	0.0200		
4-6	37.5113	36.5950	-3.5833	14.4437	482.9617	467.2771	0.0000	0.0200		
4-6	38.5113	37.5949	-3.5833	14.4537	482.8651	467.3737	0.0000	0.0200		
4-6	39.5113	38.5949	-3.5833	14.4637	482.7686	467.4702	0.0000	0.0200		
4-6	40.5113	39.5948	-3.5833	14.4737	482.6720	467.5668	0.0000	0.0200		
4-6	41.5113	40.5948	-3.5833	14.4837	482.5755	467.6633	0.0000	0.0200		
4-6	42.5113	41.5947	-3.5833	14.4937	482.4790	467.7598	0.0000	0.0200		
4-6	43.5113	42.5947	-3.5833	14.5037	482.3825	467.8563	0.0000	0.0200		
4-6	44.5113	43.5946	-3.5833	14.5137	482.2860	467.9528	0.0000	0.0200		
4-6	45.5113	44.5946	-3.5833	14.5237	482.1896	468.0492	0.0000	0.0200		
4-6	46.5113	45.5945	-3.5833	14.5337	482.0932	468.1456	0.0000	0.0200		
4-6	47.5113	46.5945	-3.5833	14.5437	481.9968	468.2420	0.0000	0.0200		
4-6	48.5113	47.5944	-3.5833	14.5537	481.9004	468.3384	0.0000	0.0200		
4-6	49.5113	48.5944	-3.5833	14.5637	481.8040	468.4348	0.0000	0.0200		
4-6	50.5113	49.5943	-3.5833	14.5736	481.7076	468.5311	0.0000	0.0200		
4-6	51.5113	50.5943	-3.5833	14.5836	481.6113	468.6275	0.0000	0.0200		
4-6	52.5113	51.5942	-3.5833	14.5936	481.5150	468.7238	0.0000	0.0200		
4-6	53.5113	52.5942	-3.5833	14.6036	481.4187	468.8201	0.0000	0.0200		
4-6	54.5113	53.5941	-3.5833	14.6136	481.3224	468.9164	0.0000	0.0200		
4-6	55.5113	54.5941	-3.5833	14.6236	481.2262	469.0126	0.0000	0.0200		
4-6	56.5113	55.5940	-3.5833	14.6336	481.1299	469.1088	0.0000	0.0200		
4-6	57.5113	56.5940	-3.5833	14.6436	481.0337	469.2051	0.0000	0.0200		
4-6	58.5113	57.5939	-3.5833	14.6536	480.9375	469.3013	0.0000	0.0200		
4-6	59.5113	58.5939	-3.5833	14.6636	480.8414	469.3974	0.0000	0.0200		
4-6	60.5113	59.5938	-3.5833	14.6736	480.7452	469.4936	0.0000	0.0200		
4-6	61.5113	60.5938	-3.5833	14.6836	480.6491	469.5897	0.0000	0.0200		

TENDON Main Canopy C2-R, Calculations

Segment	Length (ft)	X (ft)	Y (ft)	Z (ft)	Force (kips)	Force after Anchor-Set (kips)	Angle Change (deg)	Force Loss (%)	Containing Element	Additional Info.
4-6	62.5113	61.5937	-3.5833	14.6936	480.5529	469.6859	0.0000	0.0200		
4-6	63.5113	62.5937	-3.5833	14.7036	480.4568	469.7820	0.0000	0.0200		
4-6	64.5113	63.5936	-3.5833	14.7136	480.3608	469.8780	0.0000	0.0200		
4-6	65.5113	64.5936	-3.5833	14.7236	480.2647	469.9741	0.0000	0.0200		
4-6	66.5113	65.5935	-3.5833	14.7336	480.1686	470.0701	0.0000	0.0200		
4-6	67.5113	66.5935	-3.5833	14.7436	480.0726	470.1662	0.0000	0.0200		
4-6	68.5113	67.5934	-3.5833	14.7536	479.9766	470.2622	0.0000	0.0200		
4-6	69.5113	68.5934	-3.5833	14.7636	479.8806	470.3582	0.0000	0.0200		
4-6	70.5113	69.5933	-3.5833	14.7736	479.7847	470.4541	0.0000	0.0200		
4-6	71.5113	70.5933	-3.5833	14.7836	479.6887	470.5501	0.0000	0.0200		
4-6	72.5113	71.5932	-3.5833	14.7936	479.5928	470.6460	0.0000	0.0200		
4-6	73.5113	72.5932	-3.5833	14.8036	479.4969	470.7419	0.0000	0.0200		
4-6	74.5113	73.5931	-3.5833	14.8136	479.4010	470.8378	0.0000	0.0200		
4-6	75.5113	74.5931	-3.5833	14.8236	479.3051	470.9337	0.0000	0.0200		
4-6	76.5113	75.5930	-3.5833	14.8336	479.2093	471.0295	0.0000	0.0200		
4-6	77.5113	76.5930	-3.5833	14.8436	479.1134	471.1254	0.0000	0.0200		
4-6	78.5113	77.5929	-3.5833	14.8536	479.0176	471.2212	0.0000	0.0200		
4-6	79.5113	78.5929	-3.5833	14.8636	478.9218	471.3170	0.0000	0.0200		
4-6	80.5113	79.5928	-3.5833	14.8736	478.8261	471.4127	0.0000	0.0200		
4-6	81.5113	80.5928	-3.5833	14.8836	478.7303	471.5085	0.0000	0.0200		
4-6	82.5113	81.5927	-3.5833	14.8936	478.6346	471.6042	0.0000	0.0200		
4-6	83.5113	82.5927	-3.5833	14.9036	478.5388	471.6999	0.0000	0.0200		
4-6	84.5113	83.5926	-3.5833	14.9136	478.4431	471.7956	0.0000	0.0200		
4-6	85.5113	84.5926	-3.5833	14.9236	478.3475	471.8913	0.0000	0.0200		
4-6	86.5113	85.5925	-3.5833	14.9336	478.2518	471.9870	0.0000	0.0200		
4-6	87.5113	86.5925	-3.5833	14.9436	478.1562	472.0826	0.0000	0.0200		
4-6	88.5113	87.5924	-3.5833	14.9536	478.0605	472.1782	0.0000	0.0200		
4-6	89.5113	88.5924	-3.5833	14.9636	477.9649	472.2739	0.0000	0.0200		
4-6	90.5113	89.5923	-3.5833	14.9736	477.8694	472.3694	0.0000	0.0200		
4-6	91.5113	90.5923	-3.5833	14.9836	477.7738	472.4650	0.0000	0.0200		
4-6	92.5113	91.5922	-3.5833	14.9936	477.6783	472.5605	0.0000	0.0200		
4-6	93.5113	92.5922	-3.5833	15.0035	477.5827	472.6561	0.0000	0.0200		
4-6	94.5113	93.5921	-3.5833	15.0135	477.4872	472.7516	0.0000	0.0200		
4-6	95.5113	94.5921	-3.5833	15.0235	477.3917	472.8471	0.0000	0.0200		

TENDON Main Canopy C2-R, Calculations

Segment	Length (ft)	X (ft)	Y (ft)	Z (ft)	Force (kips)	Force after Anchor-Set (kips)	Angle Change (deg)	Force Loss (%)	Containing Element	Additional Info.
4-6	96.5113	95.5920	-3.5833	15.0335	477.2963	472.9425	0.0000	0.0200		
4-6	97.5113	96.5920	-3.5833	15.0435	477.2008	473.0380	0.0000	0.0200		
4-6	98.5113	97.5919	-3.5833	15.0535	477.1054	473.1334	0.0000	0.0200		
4-6	99.5113	98.5919	-3.5833	15.0635	477.0100	473.2288	0.0000	0.0200		
4-6	100.5113	99.5918	-3.5833	15.0735	476.9146	473.3242	0.0000	0.0200		
4-6	101.5113	100.5918	-3.5833	15.0835	476.8192	473.4196	0.0000	0.0200		
4-6	102.5113	101.5917	-3.5833	15.0935	476.7238	473.5149	0.0000	0.0200		
4-6	103.5113	102.5917	-3.5833	15.1035	476.6285	473.6103	0.0000	0.0200		
4-6	104.5113	103.5916	-3.5833	15.1135	476.5332	473.7056	0.0000	0.0200		
4-6	105.5113	104.5916	-3.5833	15.1235	476.4379	473.8009	0.0000	0.0200		
4-6	106.5113	105.5915	-3.5833	15.1335	476.3426	473.8962	0.0000	0.0200		
4-6	107.5113	106.5915	-3.5833	15.1435	476.2474	473.9914	0.0000	0.0200		
4-6	108.5113	107.5914	-3.5833	15.1535	476.1521	474.0867	0.0000	0.0200		
4-6	109.5113	108.5914	-3.5833	15.1635	476.0569	474.1819	0.0000	0.0200		
4-6	110.5113	109.5913	-3.5833	15.1735	475.9617	474.2771	0.0000	0.0200		
4-6	111.5113	110.5913	-3.5833	15.1835	475.8665	474.3723	0.0000	0.0200		
4-6	112.5113	111.5912	-3.5833	15.1935	475.7714	474.4674	0.0000	0.0200		
4-6	113.5113	112.5912	-3.5833	15.2035	475.6762	474.5626	0.0000	0.0200		
4-6	114.5113	113.5911	-3.5833	15.2135	475.5811	474.6577	0.0000	0.0200		
4-6	115.5113	114.5911	-3.5833	15.2235	475.4860	474.7528	0.0000	0.0200		
4-6	116.5113	115.5910	-3.5833	15.2335	475.3909	474.8479	0.0000	0.0200		
4-6	117.5113	116.5910	-3.5833	15.2435	475.2958	474.9430	0.0000	0.0200		
4-6	118.5113	117.5909	-3.5833	15.2535	475.2008	475.0380	0.0000	0.0200		
4-6	119.5113	118.5909	-3.5833	15.2635	475.1057	475.1057	0.0000	0.0200		
4-6	120.5113	119.5908	-3.5833	15.2735	475.0107	475.0107	0.0000	0.0200		
4-6	121.5113	120.5908	-3.5833	15.2835	474.9157	474.9157	0.0000	0.0200		
4-6	122.5113	121.5907	-3.5833	15.2935	474.8208	474.8208	0.0000	0.0200		
4-6	123.5113	122.5907	-3.5833	15.3035	474.7258	474.7258	0.0000	0.0200		
4-6	124.5113	123.5906	-3.5833	15.3135	474.6309	474.6309	0.0000	0.0200		
4-6	125.5113	124.5906	-3.5833	15.3235	474.5360	474.5360	0.0000	0.0200		
4-6	126.5113	125.5905	-3.5833	15.3335	474.4411	474.4411	0.0000	0.0200		
4-6	127.5113	126.5905	-3.5833	15.3435	474.3462	474.3462	0.0000	0.0200		
4-6	128.5113	127.5904	-3.5833	15.3535	474.2513	474.2513	0.0000	0.0200		
4-6	129.5113	128.5904	-3.5833	15.3635	474.1565	474.1565	0.0000	0.0200		

TENDON Main Canopy C2-R, Calculations

Segment	Length (ft)	X (ft)	Y (ft)	Z (ft)	Force (kips)	Force after Anchor-Set (kips)	Angle Change (deg)	Force Loss (%)	Containing Element	Additional Info.
4-6	130.5113	129.5903	-3.5833	15.3735	474.0617	474.0617	0.0000	0.0200		
4-6	131.5113	130.5903	-3.5833	15.3835	473.9669	473.9669	0.0000	0.0200		
4-6	132.5113	131.5902	-3.5833	15.3935	473.8721	473.8721	0.0000	0.0200		
4-6	133.5113	132.5902	-3.5833	15.4035	473.7773	473.7773	0.0000	0.0200		
4-6	134.5113	133.5901	-3.5833	15.4135	473.6826	473.6826	0.0000	0.0200		
4-6	135.5113	134.5901	-3.5833	15.4234	473.5878	473.5878	0.0000	0.0200		
4-6	136.5113	135.5900	-3.5833	15.4334	473.4931	473.4931	0.0000	0.0200		
4-6	137.5113	136.5900	-3.5833	15.4434	473.3984	473.3984	0.0000	0.0200		
4-6	138.5113	137.5899	-3.5833	15.4534	473.3038	473.3038	0.0000	0.0200		
4-6	139.5113	138.5899	-3.5833	15.4634	473.2091	473.2091	0.0000	0.0200		
4-6	140.5113	139.5898	-3.5833	15.4734	473.1145	473.1145	0.0000	0.0200		
4-6	141.5113	140.5898	-3.5833	15.4834	473.0199	473.0199	0.0000	0.0200		
4-6	142.5113	141.5897	-3.5833	15.4934	472.9253	472.9253	0.0000	0.0200		
4-6	143.5113	142.5897	-3.5833	15.5034	472.8307	472.8307	0.0000	0.0200		
4-6	144.5113	143.5896	-3.5833	15.5134	472.7361	472.7361	0.0000	0.0200		
4-6	145.5113	144.5896	-3.5833	15.5234	472.6416	472.6416	0.0000	0.0200		
4-6	146.5113	145.5895	-3.5833	15.5334	472.5471	472.5471	0.0000	0.0200		
4-6	147.5113	146.5895	-3.5833	15.5434	472.4526	472.4526	0.0000	0.0200		
4-6	148.5113	147.5894	-3.5833	15.5534	472.3581	472.3581	0.0000	0.0200		
4-6	149.5113	148.5894	-3.5833	15.5634	472.2636	472.2636	0.0000	0.0200		
4-6	150.5113	149.5893	-3.5833	15.5734	472.1692	472.1692	0.0000	0.0200		
4-6	151.5113	150.5893	-3.5833	15.5834	472.0748	472.0748	0.0000	0.0200		
4-6	152.5113	151.5892	-3.5833	15.5934	471.9804	471.9804	0.0000	0.0200		
4-6	153.5113	152.5892	-3.5833	15.6034	471.8860	471.8860	0.0000	0.0200		
4-6	154.5113	153.5891	-3.5833	15.6134	471.7916	471.7916	0.0000	0.0200		
4-6	155.5113	154.5891	-3.5833	15.6234	471.6973	471.6973	0.0000	0.0200		
4-6	156.5113	155.5890	-3.5833	15.6334	471.6029	471.6029	0.0000	0.0200		
4-6	157.5113	156.5890	-3.5833	15.6434	471.5086	471.5086	0.0000	0.0200		
4-6	158.5113	157.5889	-3.5833	15.6534	471.4143	471.4143	0.0000	0.0200		
4-6	159.5113	158.5889	-3.5833	15.6634	471.3201	471.3201	0.0000	0.0200		
4-6	160.5113	159.5888	-3.5833	15.6734	471.2258	471.2258	0.0000	0.0200		
4-6	161.5113	160.5888	-3.5833	15.6834	471.1316	471.1316	0.0000	0.0200		
4-6	162.5113	161.5887	-3.5833	15.6934	471.0373	471.0373	0.0000	0.0200		
4-6	163.5113	162.5887	-3.5833	15.7034	470.9432	470.9432	0.0000	0.0200		

TENDON Main Canopy C2-R, Calculations

Segment	Length (ft)	X (ft)	Y (ft)	Z (ft)	Force (kips)	Force after Anchor-Set (kips)	Angle Change (deg)	Force Loss (%)	Containing Element	Additional Info.
4-6	164.5113	163.5886	-3.5833	15.7134	470.8490	470.8490	0.0000	0.0200		
4-6	165.5113	164.5886	-3.5833	15.7234	470.7548	470.7548	0.0000	0.0200		
4-6	166.5113	165.5885	-3.5833	15.7334	470.6607	470.6607	0.0000	0.0200		
4-6	167.5113	166.5885	-3.5833	15.7434	470.5665	470.5665	0.0000	0.0200		
4-6	168.5113	167.5884	-3.5833	15.7534	470.4724	470.4724	0.0000	0.0200		
4-6	169.5113	168.5884	-3.5833	15.7634	470.3784	470.3784	0.0000	0.0200		
4-6	170.5113	169.5883	-3.5833	15.7734	470.2843	470.2843	0.0000	0.0200		
6	170.7749	169.8519	-3.5833	15.7760	466.4695	466.4695	1.8546	0.8112		
6	171.4221	170.4985	-3.5833	15.8034	458.9215	458.9215	3.7091	1.6181		
6	172.0694	171.1421	-3.5833	15.8726	455.1640	455.1640	1.8546	0.8188		
7	172.7480	171.8141	-3.5833	15.9669	455.1022	455.1022	0.0000	0.0136		
7	173.4266	172.4861	-3.5833	16.0613	455.0404	455.0404	0.0000	0.0136		
7	173.4381	172.4976	-3.5833	16.0629	455.0394	455.0394	0.0000	0.0002		

TENDON Main Canopy C3-L, Calculations

Segment	Length (ft)	X (ft)	Y (ft)	Z (ft)	Force (kips)	Force after Anchor-Set (kips)	Angle Change (deg)	Force Loss (%)
1	0.0000	-0.8348	3.6667	14.2254	533.8417	423.1333	0.0000	0.0000
1-2	1.0000	0.1601	3.6667	14.1244	533.7350	423.2400	0.0000	0.0200
2	1.5135	0.6709	3.6667	14.0726	529.9858	426.9892	1.5920	0.7024
2	2.3469	1.5021	3.6667	14.0115	522.5866	434.3885	3.1840	1.3961
2	3.1804	2.3355	3.6667	13.9967	518.8825	438.0925	1.5920	0.7088
3	4.0761	3.2311	3.6667	14.0056	518.7896	438.1855	0.0000	0.0179
3	4.9718	4.1268	3.6667	14.0146	518.6966	438.2784	0.0000	0.0179
3	5.8675	5.0224	3.6667	14.0235	518.6037	438.3713	0.0000	0.0179
3	6.7632	5.9181	3.6667	14.0325	518.5108	438.4642	0.0000	0.0179
3	7.6589	6.8137	3.6667	14.0414	518.4179	438.5571	0.0000	0.0179
3	8.5546	7.7094	3.6667	14.0504	518.3251	438.6499	0.0000	0.0179
3	9.4503	8.6050	3.6667	14.0594	518.2322	438.7428	0.0000	0.0179
3	10.3460	9.5007	3.6667	14.0683	518.1394	438.8356	0.0000	0.0179
3	10.3461	9.5008	3.6667	14.0683	503.3387	453.6363	6.6420	2.8565
4	11.3461	10.4942	3.7814	14.0639	503.2380	453.7370	0.0000	0.0200
4	12.3461	11.4876	3.8962	14.0595	503.1374	453.8376	0.0000	0.0200

TENDON Main Canopy C3-L, Calculations

Segment	Length (ft)	X (ft)	Y (ft)	Z (ft)	Force (kips)	Force after Anchor-Set (kips)	Angle Change (deg)	Force Loss (%)	Containing Element	Additional Info.
4	13.3461	12.4809	4.0110	14.0552	503.0368	453.9382	0.0000	0.0200		
4	14.3461	13.4743	4.1258	14.0508	502.9362	454.0388	0.0000	0.0200		
4	15.3461	14.4677	4.2405	14.0464	502.8356	454.1394	0.0000	0.0200		
4	16.3461	15.4611	4.3553	14.0420	502.7351	454.2399	0.0000	0.0200		
4	17.3461	16.4545	4.4701	14.0376	502.6345	454.3405	0.0000	0.0200		
4	18.3461	17.4479	4.5849	14.0332	502.5340	454.4410	0.0000	0.0200		
4	19.3461	18.4412	4.6996	14.0288	502.4335	454.5415	0.0000	0.0200		
4	20.3461	19.4346	4.8144	14.0245	502.3330	454.6420	0.0000	0.0200		
4	20.5109	19.5984	4.8333	14.0237	487.9678	469.0072	6.6419	2.8597		
4-6	21.5109	20.5983	4.8333	14.0337	487.8702	469.1048	0.0000	0.0200		
4-6	22.5109	21.5983	4.8333	14.0437	487.7726	469.2024	0.0000	0.0200		
4-6	23.5109	22.5982	4.8333	14.0537	487.6751	469.2999	0.0000	0.0200		
4-6	24.5109	23.5982	4.8333	14.0637	487.5776	469.3974	0.0000	0.0200		
4-6	25.5109	24.5981	4.8333	14.0737	487.4801	469.4949	0.0000	0.0200		
4-6	26.5109	25.5981	4.8333	14.0837	487.3826	469.5924	0.0000	0.0200		
4-6	27.5109	26.5980	4.8333	14.0937	487.2851	469.6899	0.0000	0.0200		
4-6	28.5109	27.5980	4.8333	14.1037	487.1877	469.7873	0.0000	0.0200		
4-6	29.5109	28.5979	4.8333	14.1137	487.0902	469.8848	0.0000	0.0200		
4-6	30.5109	29.5979	4.8333	14.1237	486.9928	469.9822	0.0000	0.0200		
4-6	31.5109	30.5978	4.8333	14.1337	486.8954	470.0796	0.0000	0.0200		
4-6	32.5109	31.5978	4.8333	14.1437	486.7981	470.1769	0.0000	0.0200		
4-6	33.5109	32.5977	4.8333	14.1537	486.7007	470.2743	0.0000	0.0200		
4-6	34.5109	33.5977	4.8333	14.1637	486.6034	470.3716	0.0000	0.0200		
4-6	35.5109	34.5976	4.8333	14.1737	486.5061	470.4689	0.0000	0.0200		
4-6	36.5109	35.5976	4.8333	14.1837	486.4088	470.5662	0.0000	0.0200		
4-6	37.5109	36.5975	4.8333	14.1937	486.3115	470.6635	0.0000	0.0200		
4-6	38.5109	37.5975	4.8333	14.2037	486.2143	470.7607	0.0000	0.0200		
4-6	39.5109	38.5974	4.8333	14.2137	486.1170	470.8580	0.0000	0.0200		
4-6	40.5109	39.5974	4.8333	14.2237	486.0198	470.9552	0.0000	0.0200		
4-6	41.5109	40.5973	4.8333	14.2337	485.9226	471.0524	0.0000	0.0200		
4-6	42.5109	41.5973	4.8333	14.2437	485.8254	471.1496	0.0000	0.0200		
4-6	43.5109	42.5972	4.8333	14.2537	485.7283	471.2467	0.0000	0.0200		
4-6	44.5109	43.5972	4.8333	14.2637	485.6312	471.3438	0.0000	0.0200		
4-6	45.5109	44.5971	4.8333	14.2737	485.5340	471.4410	0.0000	0.0200		

TENDON Main Canopy C3-L, Calculations

Segment	Length (ft)	X (ft)	Y (ft)	Z (ft)	Force (kips)	Force after Anchor-Set (kips)	Angle Change (deg)	Force Loss (%)	Containing Element	Additional Info.
4-6	46.5109	45.5971	4.8333	14.2837	485.4369	471.5381	0.0000	0.0200		
4-6	47.5109	46.5970	4.8333	14.2937	485.3399	471.6351	0.0000	0.0200		
4-6	48.5109	47.5970	4.8333	14.3037	485.2428	471.7322	0.0000	0.0200		
4-6	49.5109	48.5969	4.8333	14.3137	485.1458	471.8292	0.0000	0.0200		
4-6	50.5109	49.5969	4.8333	14.3237	485.0487	471.9263	0.0000	0.0200		
4-6	51.5109	50.5968	4.8333	14.3337	484.9517	472.0233	0.0000	0.0200		
4-6	52.5109	51.5968	4.8333	14.3437	484.8548	472.1202	0.0000	0.0200		
4-6	53.5109	52.5967	4.8333	14.3537	484.7578	472.2172	0.0000	0.0200		
4-6	54.5109	53.5967	4.8333	14.3637	484.6609	472.3141	0.0000	0.0200		
4-6	55.5109	54.5966	4.8333	14.3737	484.5639	472.4111	0.0000	0.0200		
4-6	56.5109	55.5966	4.8333	14.3836	484.4670	472.5080	0.0000	0.0200		
4-6	57.5109	56.5965	4.8333	14.3936	484.3702	472.6049	0.0000	0.0200		
4-6	58.5109	57.5965	4.8333	14.4036	484.2733	472.7017	0.0000	0.0200		
4-6	59.5109	58.5964	4.8333	14.4136	484.1764	472.7986	0.0000	0.0200		
4-6	60.5109	59.5964	4.8333	14.4236	484.0796	472.8954	0.0000	0.0200		
4-6	61.5109	60.5963	4.8333	14.4336	483.9828	472.9922	0.0000	0.0200		
4-6	62.5109	61.5963	4.8333	14.4436	483.8860	473.0890	0.0000	0.0200		
4-6	63.5109	62.5962	4.8333	14.4536	483.7893	473.1857	0.0000	0.0200		
4-6	64.5109	63.5962	4.8333	14.4636	483.6925	473.2825	0.0000	0.0200		
4-6	65.5109	64.5961	4.8333	14.4736	483.5958	473.3792	0.0000	0.0200		
4-6	66.5109	65.5961	4.8333	14.4836	483.4991	473.4759	0.0000	0.0200		
4-6	67.5109	66.5960	4.8333	14.4936	483.4024	473.5726	0.0000	0.0200		
4-6	68.5109	67.5960	4.8333	14.5036	483.3057	473.6693	0.0000	0.0200		
4-6	69.5109	68.5959	4.8333	14.5136	483.2091	473.7659	0.0000	0.0200		
4-6	70.5109	69.5959	4.8333	14.5236	483.1124	473.8626	0.0000	0.0200		
4-6	71.5109	70.5958	4.8333	14.5336	483.0158	473.9592	0.0000	0.0200		
4-6	72.5109	71.5958	4.8333	14.5436	482.9192	474.0558	0.0000	0.0200		
4-6	73.5109	72.5957	4.8333	14.5536	482.8226	474.1524	0.0000	0.0200		
4-6	74.5109	73.5957	4.8333	14.5636	482.7261	474.2489	0.0000	0.0200		
4-6	75.5109	74.5956	4.8333	14.5736	482.6296	474.3454	0.0000	0.0200		
4-6	76.5109	75.5956	4.8333	14.5836	482.5330	474.4420	0.0000	0.0200		
4-6	77.5109	76.5955	4.8333	14.5936	482.4365	474.5385	0.0000	0.0200		
4-6	78.5109	77.5955	4.8333	14.6036	482.3401	474.6349	0.0000	0.0200		
4-6	79.5109	78.5954	4.8333	14.6136	482.2436	474.7314	0.0000	0.0200		

TENDON Main Canopy C3-L, Calculations

Segment	Length (ft)	X (ft)	Y (ft)	Z (ft)	Force (kips)	Force after Anchor-Set (kips)	Angle Change (deg)	Force Loss (%)	Containing Element	Additional Info.
4-6	80.5109	79.5954	4.8333	14.6236	482.1472	474.8278	0.0000	0.0200		
4-6	81.5109	80.5953	4.8333	14.6336	482.0507	474.9243	0.0000	0.0200		
4-6	82.5109	81.5953	4.8333	14.6436	481.9543	475.0207	0.0000	0.0200		
4-6	83.5109	82.5952	4.8333	14.6536	481.8580	475.1170	0.0000	0.0200		
4-6	84.5109	83.5952	4.8333	14.6636	481.7616	475.2134	0.0000	0.0200		
4-6	85.5109	84.5951	4.8333	14.6736	481.6653	475.3097	0.0000	0.0200		
4-6	86.5109	85.5951	4.8333	14.6836	481.5689	475.4061	0.0000	0.0200		
4-6	87.5109	86.5950	4.8333	14.6936	481.4726	475.5024	0.0000	0.0200		
4-6	88.5109	87.5950	4.8333	14.7036	481.3763	475.5987	0.0000	0.0200		
4-6	89.5109	88.5949	4.8333	14.7136	481.2801	475.6949	0.0000	0.0200		
4-6	90.5109	89.5949	4.8333	14.7236	481.1838	475.7912	0.0000	0.0200		
4-6	91.5109	90.5948	4.8333	14.7336	481.0876	475.8874	0.0000	0.0200		
4-6	92.5109	91.5948	4.8333	14.7436	480.9914	475.9836	0.0000	0.0200		
4-6	93.5109	92.5947	4.8333	14.7536	480.8952	476.0798	0.0000	0.0200		
4-6	94.5109	93.5947	4.8333	14.7636	480.7990	476.1760	0.0000	0.0200		
4-6	95.5109	94.5946	4.8333	14.7736	480.7029	476.2721	0.0000	0.0200		
4-6	96.5109	95.5946	4.8333	14.7836	480.6068	476.3682	0.0000	0.0200		
4-6	97.5109	96.5945	4.8333	14.7936	480.5107	476.4644	0.0000	0.0200		
4-6	98.5109	97.5945	4.8333	14.8035	480.4146	476.5604	0.0000	0.0200		
4-6	99.5109	98.5944	4.8333	14.8135	480.3185	476.6565	0.0000	0.0200		
4-6	100.5109	99.5944	4.8333	14.8235	480.2224	476.7526	0.0000	0.0200		
4-6	101.5109	100.5943	4.8333	14.8335	480.1264	476.8486	0.0000	0.0200		
4-6	102.5109	101.5943	4.8333	14.8435	480.0304	476.9446	0.0000	0.0200		
4-6	103.5109	102.5942	4.8333	14.8535	479.9344	477.0406	0.0000	0.0200		
4-6	104.5109	103.5942	4.8333	14.8635	479.8384	477.1366	0.0000	0.0200		
4-6	105.5109	104.5941	4.8333	14.8735	479.7424	477.2326	0.0000	0.0200		
4-6	106.5109	105.5941	4.8333	14.8835	479.6465	477.3285	0.0000	0.0200		
4-6	107.5109	106.5940	4.8333	14.8935	479.5506	477.4244	0.0000	0.0200		
4-6	108.5109	107.5940	4.8333	14.9035	479.4547	477.5203	0.0000	0.0200		
4-6	109.5109	108.5939	4.8333	14.9135	479.3588	477.6162	0.0000	0.0200		
4-6	110.5109	109.5939	4.8333	14.9235	479.2629	477.7121	0.0000	0.0200		
4-6	111.5109	110.5938	4.8333	14.9335	479.1671	477.8079	0.0000	0.0200		
4-6	112.5109	111.5938	4.8333	14.9435	479.0713	477.9037	0.0000	0.0200		
4-6	113.5109	112.5937	4.8333	14.9535	478.9755	477.9995	0.0000	0.0200		

TENDON Main Canopy C3-L, Calculations

Segment	Length (ft)	X (ft)	Y (ft)	Z (ft)	Force (kips)	Force after Anchor-Set (kips)	Angle Change (deg)	Force Loss (%)	Containing Element	Additional Info.
4-6	114.5109	113.5937	4.8333	14.9635	478.8797	478.0953	0.0000	0.0200		
4-6	115.5109	114.5936	4.8333	14.9735	478.7839	478.1911	0.0000	0.0200		
4-6	116.5109	115.5936	4.8333	14.9835	478.6882	478.2868	0.0000	0.0200		
4-6	117.5109	116.5935	4.8333	14.9935	478.5924	478.3826	0.0000	0.0200		
4-6	118.5109	117.5935	4.8333	15.0035	478.4967	478.4783	0.0000	0.0200		
4-6	119.5109	118.5934	4.8333	15.0135	478.4010	478.4010	0.0000	0.0200		
4-6	120.5109	119.5934	4.8333	15.0235	478.3054	478.3054	0.0000	0.0200		
4-6	121.5109	120.5933	4.8333	15.0335	478.2097	478.2097	0.0000	0.0200		
4-6	122.5109	121.5933	4.8333	15.0435	478.1141	478.1141	0.0000	0.0200		
4-6	123.5109	122.5932	4.8333	15.0535	478.0185	478.0185	0.0000	0.0200		
4-6	124.5109	123.5932	4.8333	15.0635	477.9229	477.9229	0.0000	0.0200		
4-6	125.5109	124.5931	4.8333	15.0735	477.8273	477.8273	0.0000	0.0200		
4-6	126.5109	125.5931	4.8333	15.0835	477.7318	477.7318	0.0000	0.0200		
4-6	127.5109	126.5930	4.8333	15.0935	477.6362	477.6362	0.0000	0.0200		
4-6	128.5109	127.5930	4.8333	15.1035	477.5407	477.5407	0.0000	0.0200		
4-6	129.5109	128.5929	4.8333	15.1135	477.4452	477.4452	0.0000	0.0200		
4-6	130.5109	129.5929	4.8333	15.1235	477.3497	477.3497	0.0000	0.0200		
4-6	131.5109	130.5928	4.8333	15.1335	477.2543	477.2543	0.0000	0.0200		
4-6	132.5109	131.5928	4.8333	15.1435	477.1588	477.1588	0.0000	0.0200		
4-6	133.5109	132.5927	4.8333	15.1535	477.0634	477.0634	0.0000	0.0200		
4-6	134.5109	133.5927	4.8333	15.1635	476.9680	476.9680	0.0000	0.0200		
4-6	135.5109	134.5926	4.8333	15.1735	476.8726	476.8726	0.0000	0.0200		
4-6	136.5109	135.5926	4.8333	15.1835	476.7772	476.7772	0.0000	0.0200		
4-6	137.5109	136.5925	4.8333	15.1935	476.6819	476.6819	0.0000	0.0200		
4-6	138.5109	137.5925	4.8333	15.2035	476.5866	476.5866	0.0000	0.0200		
4-6	139.5109	138.5924	4.8333	15.2135	476.4913	476.4913	0.0000	0.0200		
4-6	140.5109	139.5924	4.8333	15.2235	476.3960	476.3960	0.0000	0.0200		
4-6	141.5109	140.5923	4.8333	15.2334	476.3007	476.3007	0.0000	0.0200		
4-6	142.5109	141.5923	4.8333	15.2434	476.2055	476.2055	0.0000	0.0200		
4-6	143.5109	142.5922	4.8333	15.2534	476.1102	476.1102	0.0000	0.0200		
4-6	144.5109	143.5922	4.8333	15.2634	476.0150	476.0150	0.0000	0.0200		
4-6	145.5109	144.5921	4.8333	15.2734	475.9198	475.9198	0.0000	0.0200		
4-6	146.5109	145.5921	4.8333	15.2834	475.8246	475.8246	0.0000	0.0200		
4-6	147.5109	146.5920	4.8333	15.2934	475.7295	475.7295	0.0000	0.0200		

TENDON Main Canopy C3-L, Calculations

Segment	Length (ft)	X (ft)	Y (ft)	Z (ft)	Force (kips)	Force after Anchor-Set (kips)	Angle Change (deg)	Force Loss (%)	Containing Element	Additional Info.
4-6	148.5109	147.5920	4.8333	15.3034	475.6344	475.6344	0.0000	0.0200		
4-6	149.5109	148.5919	4.8333	15.3134	475.5392	475.5392	0.0000	0.0200		
4-6	150.5109	149.5919	4.8333	15.3234	475.4441	475.4441	0.0000	0.0200		
4-6	151.5109	150.5918	4.8333	15.3334	475.3491	475.3491	0.0000	0.0200		
4-6	152.5109	151.5918	4.8333	15.3434	475.2540	475.2540	0.0000	0.0200		
4-6	153.5109	152.5917	4.8333	15.3534	475.1590	475.1590	0.0000	0.0200		
4-6	154.5109	153.5917	4.8333	15.3634	475.0639	475.0639	0.0000	0.0200		
4-6	155.5109	154.5916	4.8333	15.3734	474.9689	474.9689	0.0000	0.0200		
4-6	156.5109	155.5916	4.8333	15.3834	474.8739	474.8739	0.0000	0.0200		
4-6	157.5109	156.5915	4.8333	15.3934	474.7790	474.7790	0.0000	0.0200		
4-6	158.5109	157.5915	4.8333	15.4034	474.6840	474.6840	0.0000	0.0200		
4-6	159.5109	158.5914	4.8333	15.4134	474.5891	474.5891	0.0000	0.0200		
4-6	160.5109	159.5914	4.8333	15.4234	474.4942	474.4942	0.0000	0.0200		
4-6	161.5109	160.5913	4.8333	15.4334	474.3993	474.3993	0.0000	0.0200		
4-6	162.5109	161.5913	4.8333	15.4434	474.3044	474.3044	0.0000	0.0200		
4-6	163.5109	162.5912	4.8333	15.4534	474.2096	474.2096	0.0000	0.0200		
4-6	164.5109	163.5912	4.8333	15.4634	474.1148	474.1148	0.0000	0.0200		
4-6	165.5109	164.5911	4.8333	15.4734	474.0199	474.0199	0.0000	0.0200		
4-6	166.5109	165.5911	4.8333	15.4834	473.9251	473.9251	0.0000	0.0200		
4-6	167.5109	166.5910	4.8333	15.4934	473.8304	473.8304	0.0000	0.0200		
4-6	168.5109	167.5910	4.8333	15.5034	473.7356	473.7356	0.0000	0.0200		
4-6	169.5109	168.5909	4.8333	15.5134	473.6409	473.6409	0.0000	0.0200		
4-6	170.5109	169.5909	4.8333	15.5234	473.5462	473.5462	0.0000	0.0200		
6	170.7744	169.8544	4.8333	15.5260	469.7049	469.7049	1.8546	0.8112		
6	171.4217	170.5010	4.8333	15.5534	462.1046	462.1046	3.7091	1.6181		
6	172.0689	171.1446	4.8333	15.6226	458.3210	458.3210	1.8546	0.8188		
7	172.7475	171.8166	4.8333	15.7170	458.2588	458.2588	0.0000	0.0136		
7	173.4261	172.4886	4.8333	15.8113	458.1966	458.1966	0.0000	0.0136		
7	173.4377	172.5000	4.8333	15.8129	458.1955	458.1955	0.0000	0.0002		

TENDON Main Canopy C3-R, Calculations

Segment	Length (ft)	X (ft)	Y (ft)	Z (ft)	Force (kips)	Force after Anchor-Set (kips)	Angle Change (deg)	Force Loss (%)
1	0.0000	-0.8348	-3.6667	14.2254	533.8417	423.1333	0.0000	0.0000
1-2	1.0000	0.1601	-3.6667	14.1244	533.7350	423.2400	0.0000	0.0200
2	1.5135	0.6709	-3.6667	14.0726	529.9858	426.9892	1.5920	0.7024
2	2.3469	1.5021	-3.6667	14.0115	522.5866	434.3885	3.1840	1.3961
2	3.1804	2.3355	-3.6667	13.9967	518.8825	438.0925	1.5920	0.7088
3	4.0761	3.2311	-3.6667	14.0056	518.7896	438.1855	0.0000	0.0179
3	4.9718	4.1268	-3.6667	14.0146	518.6966	438.2784	0.0000	0.0179
3	5.8675	5.0224	-3.6667	14.0235	518.6037	438.3713	0.0000	0.0179
3	6.7632	5.9181	-3.6667	14.0325	518.5108	438.4642	0.0000	0.0179
3	7.6589	6.8137	-3.6667	14.0414	518.4179	438.5571	0.0000	0.0179
3	8.5546	7.7094	-3.6667	14.0504	518.3251	438.6499	0.0000	0.0179
3	9.4503	8.6050	-3.6667	14.0594	518.2322	438.7428	0.0000	0.0179
3	10.3460	9.5007	-3.6667	14.0683	518.1394	438.8356	0.0000	0.0179
3	10.3461	9.5008	-3.6667	14.0683	503.3387	453.6363	6.6420	2.8565
4	11.3461	10.4942	-3.7814	14.0639	503.2380	453.7370	0.0000	0.0200
4	12.3461	11.4876	-3.8962	14.0595	503.1374	453.8376	0.0000	0.0200
4	13.3461	12.4809	-4.0110	14.0552	503.0368	453.9382	0.0000	0.0200
4	14.3461	13.4743	-4.1258	14.0508	502.9362	454.0388	0.0000	0.0200
4	15.3461	14.4677	-4.2405	14.0464	502.8356	454.1394	0.0000	0.0200
4	16.3461	15.4611	-4.3553	14.0420	502.7351	454.2399	0.0000	0.0200
4	17.3461	16.4545	-4.4701	14.0376	502.6345	454.3405	0.0000	0.0200
4	18.3461	17.4479	-4.5849	14.0332	502.5340	454.4410	0.0000	0.0200
4	19.3461	18.4412	-4.6996	14.0288	502.4335	454.5415	0.0000	0.0200
4	20.3461	19.4346	-4.8144	14.0245	502.3330	454.6420	0.0000	0.0200
4	20.5109	19.5984	-4.8333	14.0237	487.9678	469.0072	6.6419	2.8597
4-6	21.5109	20.5983	-4.8333	14.0337	487.8702	469.1048	0.0000	0.0200
4-6	22.5109	21.5983	-4.8333	14.0437	487.7726	469.2024	0.0000	0.0200
4-6	23.5109	22.5982	-4.8333	14.0537	487.6751	469.2999	0.0000	0.0200
4-6	24.5109	23.5982	-4.8333	14.0637	487.5776	469.3974	0.0000	0.0200
4-6	25.5109	24.5981	-4.8333	14.0737	487.4801	469.4949	0.0000	0.0200

TENDON Main Canopy C3-R, Calculations

Segment	Length (ft)	X (ft)	Y (ft)	Z (ft)	Force (kips)	Force after Anchor-Set (kips)	Angle Change (deg)	Force Loss (%)	Containing Element	Additional Info.
4-6	26.5109	25.5981	-4.8333	14.0837	487.3826	469.5924	0.0000	0.0200		
4-6	27.5109	26.5980	-4.8333	14.0937	487.2851	469.6899	0.0000	0.0200		
4-6	28.5109	27.5980	-4.8333	14.1037	487.1877	469.7873	0.0000	0.0200		
4-6	29.5109	28.5979	-4.8333	14.1137	487.0902	469.8848	0.0000	0.0200		
4-6	30.5109	29.5979	-4.8333	14.1237	486.9928	469.9822	0.0000	0.0200		
4-6	31.5109	30.5978	-4.8333	14.1337	486.8954	470.0796	0.0000	0.0200		
4-6	32.5109	31.5978	-4.8333	14.1437	486.7981	470.1769	0.0000	0.0200		
4-6	33.5109	32.5977	-4.8333	14.1537	486.7007	470.2743	0.0000	0.0200		
4-6	34.5109	33.5977	-4.8333	14.1637	486.6034	470.3716	0.0000	0.0200		
4-6	35.5109	34.5976	-4.8333	14.1737	486.5061	470.4689	0.0000	0.0200		
4-6	36.5109	35.5976	-4.8333	14.1837	486.4088	470.5662	0.0000	0.0200		
4-6	37.5109	36.5975	-4.8333	14.1937	486.3115	470.6635	0.0000	0.0200		
4-6	38.5109	37.5975	-4.8333	14.2037	486.2143	470.7607	0.0000	0.0200		
4-6	39.5109	38.5974	-4.8333	14.2137	486.1170	470.8580	0.0000	0.0200		
4-6	40.5109	39.5974	-4.8333	14.2237	486.0198	470.9552	0.0000	0.0200		
4-6	41.5109	40.5973	-4.8333	14.2337	485.9226	471.0524	0.0000	0.0200		
4-6	42.5109	41.5973	-4.8333	14.2437	485.8254	471.1496	0.0000	0.0200		
4-6	43.5109	42.5972	-4.8333	14.2537	485.7283	471.2467	0.0000	0.0200		
4-6	44.5109	43.5972	-4.8333	14.2637	485.6312	471.3438	0.0000	0.0200		
4-6	45.5109	44.5971	-4.8333	14.2737	485.5340	471.4410	0.0000	0.0200		
4-6	46.5109	45.5971	-4.8333	14.2837	485.4369	471.5381	0.0000	0.0200		
4-6	47.5109	46.5970	-4.8333	14.2937	485.3399	471.6351	0.0000	0.0200		
4-6	48.5109	47.5970	-4.8333	14.3037	485.2428	471.7322	0.0000	0.0200		
4-6	49.5109	48.5969	-4.8333	14.3137	485.1458	471.8292	0.0000	0.0200		
4-6	50.5109	49.5969	-4.8333	14.3237	485.0487	471.9263	0.0000	0.0200		
4-6	51.5109	50.5968	-4.8333	14.3337	484.9517	472.0233	0.0000	0.0200		
4-6	52.5109	51.5968	-4.8333	14.3437	484.8548	472.1202	0.0000	0.0200		
4-6	53.5109	52.5967	-4.8333	14.3537	484.7578	472.2172	0.0000	0.0200		
4-6	54.5109	53.5967	-4.8333	14.3637	484.6609	472.3141	0.0000	0.0200		
4-6	55.5109	54.5966	-4.8333	14.3737	484.5639	472.4111	0.0000	0.0200		
4-6	56.5109	55.5966	-4.8333	14.3836	484.4670	472.5080	0.0000	0.0200		
4-6	57.5109	56.5965	-4.8333	14.3936	484.3702	472.6049	0.0000	0.0200		
4-6	58.5109	57.5965	-4.8333	14.4036	484.2733	472.7017	0.0000	0.0200		
4-6	59.5109	58.5964	-4.8333	14.4136	484.1764	472.7986	0.0000	0.0200		

TENDON Main Canopy C3-R, Calculations

Segment	Length (ft)	X (ft)	Y (ft)	Z (ft)	Force (kips)	Force after Anchor-Set (kips)	Angle Change (deg)	Force Loss (%)	Containing Element	Additional Info.
4-6	60.5109	59.5964	-4.8333	14.4236	484.0796	472.8954	0.0000	0.0200		
4-6	61.5109	60.5963	-4.8333	14.4336	483.9828	472.9922	0.0000	0.0200		
4-6	62.5109	61.5963	-4.8333	14.4436	483.8860	473.0890	0.0000	0.0200		
4-6	63.5109	62.5962	-4.8333	14.4536	483.7893	473.1857	0.0000	0.0200		
4-6	64.5109	63.5962	-4.8333	14.4636	483.6925	473.2825	0.0000	0.0200		
4-6	65.5109	64.5961	-4.8333	14.4736	483.5958	473.3792	0.0000	0.0200		
4-6	66.5109	65.5961	-4.8333	14.4836	483.4991	473.4759	0.0000	0.0200		
4-6	67.5109	66.5960	-4.8333	14.4936	483.4024	473.5726	0.0000	0.0200		
4-6	68.5109	67.5960	-4.8333	14.5036	483.3057	473.6693	0.0000	0.0200		
4-6	69.5109	68.5959	-4.8333	14.5136	483.2091	473.7659	0.0000	0.0200		
4-6	70.5109	69.5959	-4.8333	14.5236	483.1124	473.8626	0.0000	0.0200		
4-6	71.5109	70.5958	-4.8333	14.5336	483.0158	473.9592	0.0000	0.0200		
4-6	72.5109	71.5958	-4.8333	14.5436	482.9192	474.0558	0.0000	0.0200		
4-6	73.5109	72.5957	-4.8333	14.5536	482.8226	474.1524	0.0000	0.0200		
4-6	74.5109	73.5957	-4.8333	14.5636	482.7261	474.2489	0.0000	0.0200		
4-6	75.5109	74.5956	-4.8333	14.5736	482.6296	474.3454	0.0000	0.0200		
4-6	76.5109	75.5956	-4.8333	14.5836	482.5330	474.4420	0.0000	0.0200		
4-6	77.5109	76.5955	-4.8333	14.5936	482.4365	474.5385	0.0000	0.0200		
4-6	78.5109	77.5955	-4.8333	14.6036	482.3401	474.6349	0.0000	0.0200		
4-6	79.5109	78.5954	-4.8333	14.6136	482.2436	474.7314	0.0000	0.0200		
4-6	80.5109	79.5954	-4.8333	14.6236	482.1472	474.8278	0.0000	0.0200		
4-6	81.5109	80.5953	-4.8333	14.6336	482.0507	474.9243	0.0000	0.0200		
4-6	82.5109	81.5953	-4.8333	14.6436	481.9543	475.0207	0.0000	0.0200		
4-6	83.5109	82.5952	-4.8333	14.6536	481.8580	475.1170	0.0000	0.0200		
4-6	84.5109	83.5952	-4.8333	14.6636	481.7616	475.2134	0.0000	0.0200		
4-6	85.5109	84.5951	-4.8333	14.6736	481.6653	475.3097	0.0000	0.0200		
4-6	86.5109	85.5951	-4.8333	14.6836	481.5689	475.4061	0.0000	0.0200		
4-6	87.5109	86.5950	-4.8333	14.6936	481.4726	475.5024	0.0000	0.0200		
4-6	88.5109	87.5950	-4.8333	14.7036	481.3763	475.5987	0.0000	0.0200		
4-6	89.5109	88.5949	-4.8333	14.7136	481.2801	475.6949	0.0000	0.0200		
4-6	90.5109	89.5949	-4.8333	14.7236	481.1838	475.7912	0.0000	0.0200		
4-6	91.5109	90.5948	-4.8333	14.7336	481.0876	475.8874	0.0000	0.0200		
4-6	92.5109	91.5948	-4.8333	14.7436	480.9914	475.9836	0.0000	0.0200		
4-6	93.5109	92.5947	-4.8333	14.7536	480.8952	476.0798	0.0000	0.0200		

TENDON Main Canopy C3-R, Calculations

Segment	Length (ft)	X (ft)	Y (ft)	Z (ft)	Force (kips)	Force after Anchor-Set (kips)	Angle Change (deg)	Force Loss (%)	Containing Element	Additional Info.
4-6	94.5109	93.5947	-4.8333	14.7636	480.7990	476.1760	0.0000	0.0200		
4-6	95.5109	94.5946	-4.8333	14.7736	480.7029	476.2721	0.0000	0.0200		
4-6	96.5109	95.5946	-4.8333	14.7836	480.6068	476.3682	0.0000	0.0200		
4-6	97.5109	96.5945	-4.8333	14.7936	480.5107	476.4644	0.0000	0.0200		
4-6	98.5109	97.5945	-4.8333	14.8035	480.4146	476.5604	0.0000	0.0200		
4-6	99.5109	98.5944	-4.8333	14.8135	480.3185	476.6565	0.0000	0.0200		
4-6	100.5109	99.5944	-4.8333	14.8235	480.2224	476.7526	0.0000	0.0200		
4-6	101.5109	100.5943	-4.8333	14.8335	480.1264	476.8486	0.0000	0.0200		
4-6	102.5109	101.5943	-4.8333	14.8435	480.0304	476.9446	0.0000	0.0200		
4-6	103.5109	102.5942	-4.8333	14.8535	479.9344	477.0406	0.0000	0.0200		
4-6	104.5109	103.5942	-4.8333	14.8635	479.8384	477.1366	0.0000	0.0200		
4-6	105.5109	104.5941	-4.8333	14.8735	479.7424	477.2326	0.0000	0.0200		
4-6	106.5109	105.5941	-4.8333	14.8835	479.6465	477.3285	0.0000	0.0200		
4-6	107.5109	106.5940	-4.8333	14.8935	479.5506	477.4244	0.0000	0.0200		
4-6	108.5109	107.5940	-4.8333	14.9035	479.4547	477.5203	0.0000	0.0200		
4-6	109.5109	108.5939	-4.8333	14.9135	479.3588	477.6162	0.0000	0.0200		
4-6	110.5109	109.5939	-4.8333	14.9235	479.2629	477.7121	0.0000	0.0200		
4-6	111.5109	110.5938	-4.8333	14.9335	479.1671	477.8079	0.0000	0.0200		
4-6	112.5109	111.5938	-4.8333	14.9435	479.0713	477.9037	0.0000	0.0200		
4-6	113.5109	112.5937	-4.8333	14.9535	478.9755	477.9995	0.0000	0.0200		
4-6	114.5109	113.5937	-4.8333	14.9635	478.8797	478.0953	0.0000	0.0200		
4-6	115.5109	114.5936	-4.8333	14.9735	478.7839	478.1911	0.0000	0.0200		
4-6	116.5109	115.5936	-4.8333	14.9835	478.6882	478.2868	0.0000	0.0200		
4-6	117.5109	116.5935	-4.8333	14.9935	478.5924	478.3826	0.0000	0.0200		
4-6	118.5109	117.5935	-4.8333	15.0035	478.4967	478.4783	0.0000	0.0200		
4-6	119.5109	118.5934	-4.8333	15.0135	478.4010	478.4010	0.0000	0.0200		
4-6	120.5109	119.5934	-4.8333	15.0235	478.3054	478.3054	0.0000	0.0200		
4-6	121.5109	120.5933	-4.8333	15.0335	478.2097	478.2097	0.0000	0.0200		
4-6	122.5109	121.5933	-4.8333	15.0435	478.1141	478.1141	0.0000	0.0200		
4-6	123.5109	122.5932	-4.8333	15.0535	478.0185	478.0185	0.0000	0.0200		
4-6	124.5109	123.5932	-4.8333	15.0635	477.9229	477.9229	0.0000	0.0200		
4-6	125.5109	124.5931	-4.8333	15.0735	477.8273	477.8273	0.0000	0.0200		
4-6	126.5109	125.5931	-4.8333	15.0835	477.7318	477.7318	0.0000	0.0200		
4-6	127.5109	126.5930	-4.8333	15.0935	477.6362	477.6362	0.0000	0.0200		

TENDON Main Canopy C3-R, Calculations

Segment	Length (ft)	X (ft)	Y (ft)	Z (ft)	Force (kips)	Force after Anchor-Set (kips)	Angle Change (deg)	Force Loss (%)	Containing Element	Additional Info.
4-6	128.5109	127.5930	-4.8333	15.1035	477.5407	477.5407	0.0000	0.0200		
4-6	129.5109	128.5929	-4.8333	15.1135	477.4452	477.4452	0.0000	0.0200		
4-6	130.5109	129.5929	-4.8333	15.1235	477.3497	477.3497	0.0000	0.0200		
4-6	131.5109	130.5928	-4.8333	15.1335	477.2543	477.2543	0.0000	0.0200		
4-6	132.5109	131.5928	-4.8333	15.1435	477.1588	477.1588	0.0000	0.0200		
4-6	133.5109	132.5927	-4.8333	15.1535	477.0634	477.0634	0.0000	0.0200		
4-6	134.5109	133.5927	-4.8333	15.1635	476.9680	476.9680	0.0000	0.0200		
4-6	135.5109	134.5926	-4.8333	15.1735	476.8726	476.8726	0.0000	0.0200		
4-6	136.5109	135.5926	-4.8333	15.1835	476.7772	476.7772	0.0000	0.0200		
4-6	137.5109	136.5925	-4.8333	15.1935	476.6819	476.6819	0.0000	0.0200		
4-6	138.5109	137.5925	-4.8333	15.2035	476.5866	476.5866	0.0000	0.0200		
4-6	139.5109	138.5924	-4.8333	15.2135	476.4913	476.4913	0.0000	0.0200		
4-6	140.5109	139.5924	-4.8333	15.2235	476.3960	476.3960	0.0000	0.0200		
4-6	141.5109	140.5923	-4.8333	15.2334	476.3007	476.3007	0.0000	0.0200		
4-6	142.5109	141.5923	-4.8333	15.2434	476.2055	476.2055	0.0000	0.0200		
4-6	143.5109	142.5922	-4.8333	15.2534	476.1102	476.1102	0.0000	0.0200		
4-6	144.5109	143.5922	-4.8333	15.2634	476.0150	476.0150	0.0000	0.0200		
4-6	145.5109	144.5921	-4.8333	15.2734	475.9198	475.9198	0.0000	0.0200		
4-6	146.5109	145.5921	-4.8333	15.2834	475.8246	475.8246	0.0000	0.0200		
4-6	147.5109	146.5920	-4.8333	15.2934	475.7295	475.7295	0.0000	0.0200		
4-6	148.5109	147.5920	-4.8333	15.3034	475.6344	475.6344	0.0000	0.0200		
4-6	149.5109	148.5919	-4.8333	15.3134	475.5392	475.5392	0.0000	0.0200		
4-6	150.5109	149.5919	-4.8333	15.3234	475.4441	475.4441	0.0000	0.0200		
4-6	151.5109	150.5918	-4.8333	15.3334	475.3491	475.3491	0.0000	0.0200		
4-6	152.5109	151.5918	-4.8333	15.3434	475.2540	475.2540	0.0000	0.0200		
4-6	153.5109	152.5917	-4.8333	15.3534	475.1590	475.1590	0.0000	0.0200		
4-6	154.5109	153.5917	-4.8333	15.3634	475.0639	475.0639	0.0000	0.0200		
4-6	155.5109	154.5916	-4.8333	15.3734	474.9689	474.9689	0.0000	0.0200		
4-6	156.5109	155.5916	-4.8333	15.3834	474.8739	474.8739	0.0000	0.0200		
4-6	157.5109	156.5915	-4.8333	15.3934	474.7790	474.7790	0.0000	0.0200		
4-6	158.5109	157.5915	-4.8333	15.4034	474.6840	474.6840	0.0000	0.0200		
4-6	159.5109	158.5914	-4.8333	15.4134	474.5891	474.5891	0.0000	0.0200		
4-6	160.5109	159.5914	-4.8333	15.4234	474.4942	474.4942	0.0000	0.0200		
4-6	161.5109	160.5913	-4.8333	15.4334	474.3993	474.3993	0.0000	0.0200		

TENDON Main Canopy C3-R, Calculations

Segment	Length (ft)	X (ft)	Y (ft)	Z (ft)	Force (kips)	Force after Anchor-Set (kips)	Angle Change (deg)	Force Loss (%)	Containing Element	Additional Info.
4-6	162.5109	161.5913	-4.8333	15.4434	474.3044	474.3044	0.0000	0.0200		
4-6	163.5109	162.5912	-4.8333	15.4534	474.2096	474.2096	0.0000	0.0200		
4-6	164.5109	163.5912	-4.8333	15.4634	474.1148	474.1148	0.0000	0.0200		
4-6	165.5109	164.5911	-4.8333	15.4734	474.0199	474.0199	0.0000	0.0200		
4-6	166.5109	165.5911	-4.8333	15.4834	473.9251	473.9251	0.0000	0.0200		
4-6	167.5109	166.5910	-4.8333	15.4934	473.8304	473.8304	0.0000	0.0200		
4-6	168.5109	167.5910	-4.8333	15.5034	473.7356	473.7356	0.0000	0.0200		
4-6	169.5109	168.5909	-4.8333	15.5134	473.6409	473.6409	0.0000	0.0200		
4-6	170.5109	169.5909	-4.8333	15.5234	473.5462	473.5462	0.0000	0.0200		
6	170.7744	169.8544	-4.8333	15.5260	469.7049	469.7049	1.8546	0.8112		
6	171.4217	170.5010	-4.8333	15.5534	462.1046	462.1046	3.7091	1.6181		
6	172.0689	171.1446	-4.8333	15.6226	458.3210	458.3210	1.8546	0.8188		
7	172.7475	171.8166	-4.8333	15.7170	458.2588	458.2588	0.0000	0.0136		
7	173.4261	172.4886	-4.8333	15.8113	458.1966	458.1966	0.0000	0.0136		
7	173.4377	172.5000	-4.8333	15.8129	458.1955	458.1955	0.0000	0.0002		

TENDON Back Deck D7-L, Calculations

Segment	Length (ft)	X (ft)	Y (ft)	Z (ft)	Force (kips)	Force after Anchor-Set (kips)	Angle Change (deg)	Force Loss (%)
1	0.0000	174.5018	4.6667	-0.1775	764.6648	764.6648	0.0000	0.0200
1-2	1.0000	175.4989	4.6667	-0.1015	764.8177	764.8177	0.0000	0.0200
1-2	2.0000	176.4960	4.6667	-0.0255	764.9707	764.9707	0.0000	0.0069
2	2.3449	176.8399	4.6667	0.0007	765.0235	765.0235	0.9462	0.4219
2	2.8403	177.3345	4.6667	0.0302	768.2646	766.4105	1.8924	0.8321
2	3.3357	177.8297	4.6667	0.0433	774.7114	759.9638	0.9462	0.4319
2-4	4.3357	178.8296	4.6667	0.0533	778.0720	756.6031	0.0000	0.0200
2-4	5.3357	179.8296	4.6667	0.0633	778.2277	756.4474	0.0000	0.0200
2-4	6.3357	180.8295	4.6667	0.0733	778.3833	756.2918	0.0000	0.0200
2-4	7.3357	181.8295	4.6667	0.0833	778.5390	756.1361	0.0000	0.0200
2-4	8.3357	182.8294	4.6667	0.0933	778.6948	755.9804	0.0000	0.0200
2-4	9.3357	183.8294	4.6667	0.1033	778.8505	755.8246	0.0000	0.0200
2-4	10.3357	184.8293	4.6667	0.1133	779.0063	755.6688	0.0000	0.0200
2-4	11.3357	185.8293	4.6667	0.1233	779.1621	755.5130	0.0000	0.0200

TENDON Back Deck D7-L, Calculations

Segment	Length (ft)	X (ft)	Y (ft)	Z (ft)	Force (kips)	Force after Anchor-Set (kips)	Angle Change (deg)	Force Loss (%)	Containing Element	Additional Info.
2-4	12.3357	186.8292	4.6667	0.1333	779.3180	755.3572	0.0000	0.0200		
2-4	13.3357	187.8292	4.6667	0.1433	779.4738	755.2013	0.0000	0.0200		
2-4	14.3357	188.8291	4.6667	0.1533	779.6298	755.0454	0.0000	0.0200		
2-4	15.3357	189.8291	4.6667	0.1633	779.7857	754.8894	0.0000	0.0200		
2-4	16.3357	190.8290	4.6667	0.1733	779.9417	754.7335	0.0000	0.0200		
2-4	17.3357	191.8290	4.6667	0.1833	780.0977	754.5774	0.0000	0.0200		
2-4	18.3357	192.8289	4.6667	0.1933	780.2537	754.4214	0.0000	0.0200		
2-4	19.3357	193.8289	4.6667	0.2033	780.4098	754.2653	0.0000	0.0200		
2-4	20.3357	194.8288	4.6667	0.2133	780.5659	754.1093	0.0000	0.0200		
2-4	21.3357	195.8288	4.6667	0.2233	780.7220	753.9531	0.0000	0.0200		
2-4	22.3357	196.8287	4.6667	0.2333	780.8782	753.7970	0.0000	0.0200		
2-4	23.3357	197.8287	4.6667	0.2433	781.0343	753.6408	0.0000	0.0200		
2-4	24.3357	198.8286	4.6667	0.2533	781.1906	753.4845	0.0000	0.0200		
2-4	25.3357	199.8286	4.6667	0.2633	781.3468	753.3283	0.0000	0.0200		
2-4	26.3357	200.8285	4.6667	0.2733	781.5031	753.1720	0.0000	0.0200		
2-4	27.3357	201.8285	4.6667	0.2833	781.6594	753.0157	0.0000	0.0200		
2-4	28.3357	202.8284	4.6667	0.2933	781.8158	752.8593	0.0000	0.0200		
2-4	29.3357	203.8284	4.6667	0.3033	781.9722	752.7030	0.0000	0.0200		
2-4	30.3357	204.8283	4.6667	0.3133	782.1286	752.5466	0.0000	0.0200		
2-4	31.3357	205.8283	4.6667	0.3233	782.2850	752.3901	0.0000	0.0200		
2-4	32.3357	206.8282	4.6667	0.3333	782.4415	752.2336	0.0000	0.0200		
2-4	33.3357	207.8282	4.6667	0.3433	782.5980	752.0771	0.0000	0.0200		
2-4	34.3357	208.8281	4.6667	0.3533	782.7545	751.9206	0.0000	0.0200		
2-4	35.3357	209.8281	4.6667	0.3633	782.9111	751.7640	0.0000	0.0200		
2-4	36.3357	210.8280	4.6667	0.3733	783.0677	751.6074	0.0000	0.0200		
2-4	37.3357	211.8280	4.6667	0.3833	783.2243	751.4508	0.0000	0.0200		
2-4	38.3357	212.8279	4.6667	0.3933	783.3810	751.2941	0.0000	0.0200		
2-4	39.3357	213.8279	4.6667	0.4033	783.5377	751.1375	0.0000	0.0200		
2-4	40.3357	214.8278	4.6667	0.4133	783.6944	750.9807	0.0000	0.0200		
2-4	41.3357	215.8278	4.6667	0.4233	783.8511	750.8240	0.0000	0.0200		
2-4	42.3357	216.8277	4.6667	0.4333	784.0079	750.6672	0.0000	0.0200		
2-4	43.3357	217.8277	4.6667	0.4433	784.1647	750.5104	0.0000	0.0200		
2-4	44.3357	218.8276	4.6667	0.4533	784.3216	750.3535	0.0000	0.0200		
2-4	45.3357	219.8276	4.6667	0.4633	784.4785	750.1966	0.0000	0.0200		

TENDON Back Deck D7-L, Calculations

Segment	Length (ft)	X (ft)	Y (ft)	Z (ft)	Force (kips)	Force after Anchor-Set (kips)	Angle Change (deg)	Force Loss (%)	Containing Element	Additional Info.
2-4	46.3357	220.8275	4.6667	0.4733	784.6354	750.0397	0.0000	0.0200		
2-4	47.3357	221.8275	4.6667	0.4833	784.7923	749.8828	0.0000	0.0200		
2-4	48.3357	222.8274	4.6667	0.4933	784.9493	749.7258	0.0000	0.0200		
2-4	49.3357	223.8274	4.6667	0.5033	785.1063	749.5688	0.0000	0.0200		
2-4	50.3357	224.8273	4.6667	0.5133	785.2633	749.4118	0.0000	0.0200		
2-4	51.3357	225.8273	4.6667	0.5233	785.4204	749.2547	0.0000	0.0200		
2-4	52.3357	226.8272	4.6667	0.5333	785.5775	749.0976	0.0000	0.0200		
2-4	53.3357	227.8272	4.6667	0.5433	785.7346	748.9405	0.0000	0.0200		
2-4	54.3357	228.8271	4.6667	0.5533	785.8918	748.7833	0.0000	0.0200		
2-4	55.3357	229.8271	4.6667	0.5633	786.0490	748.6261	0.0000	0.0200		
2-4	56.3357	230.8270	4.6667	0.5733	786.2062	748.4689	0.0000	0.0200		
2-4	57.3357	231.8270	4.6667	0.5833	786.3635	748.3116	0.0000	0.0200		
2-4	58.3357	232.8269	4.6667	0.5933	786.5208	748.1543	0.0000	0.0200		
2-4	59.3357	233.8269	4.6667	0.6033	786.6781	747.9970	0.0000	0.0200		
2-4	60.3357	234.8268	4.6667	0.6133	786.8354	747.8397	0.0000	0.0200		
2-4	61.3357	235.8268	4.6667	0.6233	786.9928	747.6823	0.0000	0.0200		
2-4	62.3357	236.8267	4.6667	0.6333	787.1502	747.5249	0.0000	0.0200		
2-4	63.3357	237.8267	4.6667	0.6433	787.3077	747.3674	0.0000	0.0200		
2-4	64.3357	238.8266	4.6667	0.6533	787.4652	747.2100	0.0000	0.0200		
2-4	65.3357	239.8266	4.6667	0.6633	787.6227	747.0524	0.0000	0.0200		
2-4	66.3357	240.8265	4.6667	0.6733	787.7802	746.8949	0.0000	0.0200		
2-4	67.3357	241.8265	4.6667	0.6833	787.9378	746.7373	0.0000	0.0200		
2-4	68.3357	242.8264	4.6667	0.6933	788.0954	746.5797	0.0000	0.0200		
2-4	69.3357	243.8264	4.6667	0.7033	788.2530	746.4221	0.0000	0.0200		
2-4	70.3357	244.8263	4.6667	0.7133	788.4107	746.2644	0.0000	0.0200		
2-4	71.3357	245.8263	4.6667	0.7233	788.5684	746.1067	0.0000	0.0200		
2-4	72.3357	246.8262	4.6667	0.7333	788.7261	745.9490	0.0000	0.0200		
2-4	73.3357	247.8262	4.6667	0.7433	788.8839	745.7912	0.0000	0.0200		
2-4	74.3357	248.8261	4.6667	0.7533	789.0417	745.6335	0.0000	0.0200		
2-4	75.3357	249.8261	4.6667	0.7633	789.1995	745.4756	0.0000	0.0200		
2-4	76.3357	250.8260	4.6667	0.7733	789.3573	745.3178	0.0000	0.0200		
2-4	77.3357	251.8260	4.6667	0.7833	789.5152	745.1599	0.0000	0.0200		
2-4	78.3357	252.8259	4.6667	0.7933	789.6732	745.0020	0.0000	0.0200		
2-4	79.3357	253.8259	4.6667	0.8033	789.8311	744.8440	0.0000	0.0200		

TENDON Back Deck D7-L, Calculations

Segment	Length (ft)	X (ft)	Y (ft)	Z (ft)	Force (kips)	Force after Anchor-Set (kips)	Angle Change (deg)	Force Loss (%)	Containing Element	Additional Info.
2-4	80.3357	254.8258	4.6667	0.8133	789.9891	744.6860	0.0000	0.0200		
2-4	81.3357	255.8258	4.6667	0.8233	790.1471	744.5280	0.0000	0.0200		
2-4	82.3357	256.8257	4.6667	0.8333	790.3051	744.3700	0.0000	0.0200		
2-4	83.3357	257.8257	4.6667	0.8433	790.4632	744.2119	0.0000	0.0200		
2-4	84.3357	258.8256	4.6667	0.8533	790.6213	744.0538	0.0000	0.0200		
2-4	85.3357	259.8256	4.6667	0.8633	790.7795	743.8956	0.0000	0.0200		
2-4	86.3357	260.8255	4.6667	0.8733	790.9376	743.7375	0.0000	0.0200		
2-4	87.3357	261.8255	4.6667	0.8833	791.0958	743.5793	0.0000	0.0200		
2-4	88.3357	262.8254	4.6667	0.8933	791.2541	743.4210	0.0000	0.0200		
2-4	89.3357	263.8254	4.6667	0.9033	791.4123	743.2628	0.0000	0.0200		
2-4	90.3357	264.8253	4.6667	0.9133	791.5706	743.1045	0.0000	0.0200		
2-4	91.3357	265.8253	4.6667	0.9233	791.7290	742.9461	0.0000	0.0200		
2-4	92.3357	266.8252	4.6667	0.9333	791.8873	742.7878	0.0000	0.0200		
2-4	93.3357	267.8252	4.6667	0.9433	792.0457	742.6294	0.0000	0.0200		
2-4	94.3357	268.8251	4.6667	0.9533	792.2042	742.4710	0.0000	0.0077		
4	94.7194	269.2088	4.6667	0.9571	792.2649	742.4102	2.4993	1.1019		
4	95.5915	270.0804	4.6667	0.9278	801.0919	733.5833	4.9986	2.1745		
4	96.4637	270.9462	4.6667	0.8226	818.8990	715.7761	2.4993	1.0991		
6	97.1986	271.6713	4.6667	0.7023	827.9999	706.6752	0.0000	0.0147		
6	97.9336	272.3963	4.6667	0.5819	828.1216	706.5535	0.0000	0.0147		
6	98.6686	273.1214	4.6667	0.4616	828.2434	706.4317	0.0000	0.0044		
6	98.8892	273.3390	4.6667	0.4254	828.2799	706.3952	0.0000	0.0000		

TENDON Back Deck D7-R, Calculations

Segment	Length (ft)	X (ft)	Y (ft)	Z (ft)	Force (kips)	Force after Anchor-Set (kips)	Angle Change (deg)	Force Loss (%)
1	0.0000	174.5018	-4.6667	-0.1775	764.6648	764.6648	0.0000	0.0200
1-2	1.0000	175.4989	-4.6667	-0.1015	764.8177	764.8177	0.0000	0.0200
1-2	2.0000	176.4960	-4.6667	-0.0255	764.9707	764.9707	0.0000	0.0069
2	2.3449	176.8399	-4.6667	0.0007	765.0235	765.0235	0.9462	0.4219
2	2.8403	177.3345	-4.6667	0.0302	768.2646	766.4105	1.8924	0.8321
2	3.3357	177.8297	-4.6667	0.0433	774.7114	759.9638	0.9462	0.4319
2-4	4.3357	178.8296	-4.6667	0.0533	778.0720	756.6031	0.0000	0.0200

TENDON Back Deck D7-R, Calculations

Segment	Length (ft)	X (ft)	Y (ft)	Z (ft)	Force (kips)	Force after Anchor-Set (kips)	Angle Change (deg)	Force Loss (%)	Containing Element	Additional Info.
2-4	5.3357	179.8296	-4.6667	0.0633	778.2277	756.4474	0.0000	0.0200		
2-4	6.3357	180.8295	-4.6667	0.0733	778.3833	756.2918	0.0000	0.0200		
2-4	7.3357	181.8295	-4.6667	0.0833	778.5390	756.1361	0.0000	0.0200		
2-4	8.3357	182.8294	-4.6667	0.0933	778.6948	755.9804	0.0000	0.0200		
2-4	9.3357	183.8294	-4.6667	0.1033	778.8505	755.8246	0.0000	0.0200		
2-4	10.3357	184.8293	-4.6667	0.1133	779.0063	755.6688	0.0000	0.0200		
2-4	11.3357	185.8293	-4.6667	0.1233	779.1621	755.5130	0.0000	0.0200		
2-4	12.3357	186.8292	-4.6667	0.1333	779.3180	755.3572	0.0000	0.0200		
2-4	13.3357	187.8292	-4.6667	0.1433	779.4738	755.2013	0.0000	0.0200		
2-4	14.3357	188.8291	-4.6667	0.1533	779.6298	755.0454	0.0000	0.0200		
2-4	15.3357	189.8291	-4.6667	0.1633	779.7857	754.8894	0.0000	0.0200		
2-4	16.3357	190.8290	-4.6667	0.1733	779.9417	754.7335	0.0000	0.0200		
2-4	17.3357	191.8290	-4.6667	0.1833	780.0977	754.5774	0.0000	0.0200		
2-4	18.3357	192.8289	-4.6667	0.1933	780.2537	754.4214	0.0000	0.0200		
2-4	19.3357	193.8289	-4.6667	0.2033	780.4098	754.2653	0.0000	0.0200		
2-4	20.3357	194.8288	-4.6667	0.2133	780.5659	754.1093	0.0000	0.0200		
2-4	21.3357	195.8288	-4.6667	0.2233	780.7220	753.9531	0.0000	0.0200		
2-4	22.3357	196.8287	-4.6667	0.2333	780.8782	753.7970	0.0000	0.0200		
2-4	23.3357	197.8287	-4.6667	0.2433	781.0343	753.6408	0.0000	0.0200		
2-4	24.3357	198.8286	-4.6667	0.2533	781.1906	753.4845	0.0000	0.0200		
2-4	25.3357	199.8286	-4.6667	0.2633	781.3468	753.3283	0.0000	0.0200		
2-4	26.3357	200.8285	-4.6667	0.2733	781.5031	753.1720	0.0000	0.0200		
2-4	27.3357	201.8285	-4.6667	0.2833	781.6594	753.0157	0.0000	0.0200		
2-4	28.3357	202.8284	-4.6667	0.2933	781.8158	752.8593	0.0000	0.0200		
2-4	29.3357	203.8284	-4.6667	0.3033	781.9722	752.7030	0.0000	0.0200		
2-4	30.3357	204.8283	-4.6667	0.3133	782.1286	752.5466	0.0000	0.0200		
2-4	31.3357	205.8283	-4.6667	0.3233	782.2850	752.3901	0.0000	0.0200		
2-4	32.3357	206.8282	-4.6667	0.3333	782.4415	752.2336	0.0000	0.0200		
2-4	33.3357	207.8282	-4.6667	0.3433	782.5980	752.0771	0.0000	0.0200		
2-4	34.3357	208.8281	-4.6667	0.3533	782.7545	751.9206	0.0000	0.0200		
2-4	35.3357	209.8281	-4.6667	0.3633	782.9111	751.7640	0.0000	0.0200		
2-4	36.3357	210.8280	-4.6667	0.3733	783.0677	751.6074	0.0000	0.0200		
2-4	37.3357	211.8280	-4.6667	0.3833	783.2243	751.4508	0.0000	0.0200		
2-4	38.3357	212.8279	-4.6667	0.3933	783.3810	751.2941	0.0000	0.0200		

TENDON Back Deck D7-R, Calculations

Segment	Length (ft)	X (ft)	Y (ft)	Z (ft)	Force (kips)	Force after Anchor-Set (kips)	Angle Change (deg)	Force Loss (%)	Containing Element	Additional Info.
2-4	39.3357	213.8279	-4.6667	0.4033	783.5377	751.1375	0.0000	0.0200		
2-4	40.3357	214.8278	-4.6667	0.4133	783.6944	750.9807	0.0000	0.0200		
2-4	41.3357	215.8278	-4.6667	0.4233	783.8511	750.8240	0.0000	0.0200		
2-4	42.3357	216.8277	-4.6667	0.4333	784.0079	750.6672	0.0000	0.0200		
2-4	43.3357	217.8277	-4.6667	0.4433	784.1647	750.5104	0.0000	0.0200		
2-4	44.3357	218.8276	-4.6667	0.4533	784.3216	750.3535	0.0000	0.0200		
2-4	45.3357	219.8276	-4.6667	0.4633	784.4785	750.1966	0.0000	0.0200		
2-4	46.3357	220.8275	-4.6667	0.4733	784.6354	750.0397	0.0000	0.0200		
2-4	47.3357	221.8275	-4.6667	0.4833	784.7923	749.8828	0.0000	0.0200		
2-4	48.3357	222.8274	-4.6667	0.4933	784.9493	749.7258	0.0000	0.0200		
2-4	49.3357	223.8274	-4.6667	0.5033	785.1063	749.5688	0.0000	0.0200		
2-4	50.3357	224.8273	-4.6667	0.5133	785.2633	749.4118	0.0000	0.0200		
2-4	51.3357	225.8273	-4.6667	0.5233	785.4204	749.2547	0.0000	0.0200		
2-4	52.3357	226.8272	-4.6667	0.5333	785.5775	749.0976	0.0000	0.0200		
2-4	53.3357	227.8272	-4.6667	0.5433	785.7346	748.9405	0.0000	0.0200		
2-4	54.3357	228.8271	-4.6667	0.5533	785.8918	748.7833	0.0000	0.0200		
2-4	55.3357	229.8271	-4.6667	0.5633	786.0490	748.6261	0.0000	0.0200		
2-4	56.3357	230.8270	-4.6667	0.5733	786.2062	748.4689	0.0000	0.0200		
2-4	57.3357	231.8270	-4.6667	0.5833	786.3635	748.3116	0.0000	0.0200		
2-4	58.3357	232.8269	-4.6667	0.5933	786.5208	748.1543	0.0000	0.0200		
2-4	59.3357	233.8269	-4.6667	0.6033	786.6781	747.9970	0.0000	0.0200		
2-4	60.3357	234.8268	-4.6667	0.6133	786.8354	747.8397	0.0000	0.0200		
2-4	61.3357	235.8268	-4.6667	0.6233	786.9928	747.6823	0.0000	0.0200		
2-4	62.3357	236.8267	-4.6667	0.6333	787.1502	747.5249	0.0000	0.0200		
2-4	63.3357	237.8267	-4.6667	0.6433	787.3077	747.3674	0.0000	0.0200		
2-4	64.3357	238.8266	-4.6667	0.6533	787.4652	747.2100	0.0000	0.0200		
2-4	65.3357	239.8266	-4.6667	0.6633	787.6227	747.0524	0.0000	0.0200		
2-4	66.3357	240.8265	-4.6667	0.6733	787.7802	746.8949	0.0000	0.0200		
2-4	67.3357	241.8265	-4.6667	0.6833	787.9378	746.7373	0.0000	0.0200		
2-4	68.3357	242.8264	-4.6667	0.6933	788.0954	746.5797	0.0000	0.0200		
2-4	69.3357	243.8264	-4.6667	0.7033	788.2530	746.4221	0.0000	0.0200		
2-4	70.3357	244.8263	-4.6667	0.7133	788.4107	746.2644	0.0000	0.0200		
2-4	71.3357	245.8263	-4.6667	0.7233	788.5684	746.1067	0.0000	0.0200		
2-4	72.3357	246.8262	-4.6667	0.7333	788.7261	745.9490	0.0000	0.0200		

TENDON Back Deck D7-R, Calculations

Segment	Length (ft)	X (ft)	Y (ft)	Z (ft)	Force (kips)	Force after Anchor-Set (kips)	Angle Change (deg)	Force Loss (%)	Containing Element	Additional Info.
2-4	73.3357	247.8262	-4.6667	0.7433	788.8839	745.7912	0.0000	0.0200		
2-4	74.3357	248.8261	-4.6667	0.7533	789.0417	745.6335	0.0000	0.0200		
2-4	75.3357	249.8261	-4.6667	0.7633	789.1995	745.4756	0.0000	0.0200		
2-4	76.3357	250.8260	-4.6667	0.7733	789.3573	745.3178	0.0000	0.0200		
2-4	77.3357	251.8260	-4.6667	0.7833	789.5152	745.1599	0.0000	0.0200		
2-4	78.3357	252.8259	-4.6667	0.7933	789.6732	745.0020	0.0000	0.0200		
2-4	79.3357	253.8259	-4.6667	0.8033	789.8311	744.8440	0.0000	0.0200		
2-4	80.3357	254.8258	-4.6667	0.8133	789.9891	744.6860	0.0000	0.0200		
2-4	81.3357	255.8258	-4.6667	0.8233	790.1471	744.5280	0.0000	0.0200		
2-4	82.3357	256.8257	-4.6667	0.8333	790.3051	744.3700	0.0000	0.0200		
2-4	83.3357	257.8257	-4.6667	0.8433	790.4632	744.2119	0.0000	0.0200		
2-4	84.3357	258.8256	-4.6667	0.8533	790.6213	744.0538	0.0000	0.0200		
2-4	85.3357	259.8256	-4.6667	0.8633	790.7795	743.8956	0.0000	0.0200		
2-4	86.3357	260.8255	-4.6667	0.8733	790.9376	743.7375	0.0000	0.0200		
2-4	87.3357	261.8255	-4.6667	0.8833	791.0958	743.5793	0.0000	0.0200		
2-4	88.3357	262.8254	-4.6667	0.8933	791.2541	743.4210	0.0000	0.0200		
2-4	89.3357	263.8254	-4.6667	0.9033	791.4123	743.2628	0.0000	0.0200		
2-4	90.3357	264.8253	-4.6667	0.9133	791.5706	743.1045	0.0000	0.0200		
2-4	91.3357	265.8253	-4.6667	0.9233	791.7290	742.9461	0.0000	0.0200		
2-4	92.3357	266.8252	-4.6667	0.9333	791.8873	742.7878	0.0000	0.0200		
2-4	93.3357	267.8252	-4.6667	0.9433	792.0457	742.6294	0.0000	0.0200		
2-4	94.3357	268.8251	-4.6667	0.9533	792.2042	742.4710	0.0000	0.0077		
4	94.7194	269.2088	-4.6667	0.9571	792.2649	742.4102	2.4993	1.1019		
4	95.5915	270.0804	-4.6667	0.9278	801.0919	733.5833	4.9986	2.1745		
4	96.4637	270.9462	-4.6667	0.8226	818.8990	715.7761	2.4993	1.0991		
6	97.1986	271.6713	-4.6667	0.7023	827.9999	706.6752	0.0000	0.0147		
6	97.9336	272.3963	-4.6667	0.5819	828.1216	706.5535	0.0000	0.0147		
6	98.6686	273.1214	-4.6667	0.4616	828.2434	706.4317	0.0000	0.0044		
6	98.8892	273.3390	-4.6667	0.4254	828.2799	706.3952	0.0000	0.0000		

TENDON Back Deck D8-L, Calculations

Segment	Length (ft)	X (ft)	Y (ft)	Z (ft)	Force (kips)	Force after Anchor-Set (kips)	Angle Change (deg)	Force Loss (%)
1	0.0000	174.5018	6.1667	-0.1775	764.6648	764.6648	0.0000	0.0200
1-2	1.0000	175.4989	6.1667	-0.1015	764.8177	764.8177	0.0000	0.0200
1-2	2.0000	176.4960	6.1667	-0.0255	764.9707	764.9707	0.0000	0.0069
2	2.3449	176.8399	6.1667	0.0007	765.0235	765.0235	0.9462	0.4219
2	2.8403	177.3345	6.1667	0.0302	768.2646	766.4105	1.8924	0.8321
2	3.3357	177.8297	6.1667	0.0433	774.7114	759.9638	0.9462	0.4319
2-4	4.3357	178.8296	6.1667	0.0533	778.0720	756.6031	0.0000	0.0200
2-4	5.3357	179.8296	6.1667	0.0633	778.2277	756.4474	0.0000	0.0200
2-4	6.3357	180.8295	6.1667	0.0733	778.3833	756.2918	0.0000	0.0200
2-4	7.3357	181.8295	6.1667	0.0833	778.5390	756.1361	0.0000	0.0200
2-4	8.3357	182.8294	6.1667	0.0933	778.6948	755.9804	0.0000	0.0200
2-4	9.3357	183.8294	6.1667	0.1033	778.8505	755.8246	0.0000	0.0200
2-4	10.3357	184.8293	6.1667	0.1133	779.0063	755.6688	0.0000	0.0200
2-4	11.3357	185.8293	6.1667	0.1233	779.1621	755.5130	0.0000	0.0200
2-4	12.3357	186.8292	6.1667	0.1333	779.3180	755.3572	0.0000	0.0200
2-4	13.3357	187.8292	6.1667	0.1433	779.4738	755.2013	0.0000	0.0200
2-4	14.3357	188.8291	6.1667	0.1533	779.6298	755.0454	0.0000	0.0200
2-4	15.3357	189.8291	6.1667	0.1633	779.7857	754.8894	0.0000	0.0200
2-4	16.3357	190.8290	6.1667	0.1733	779.9417	754.7335	0.0000	0.0200
2-4	17.3357	191.8290	6.1667	0.1833	780.0977	754.5774	0.0000	0.0200
2-4	18.3357	192.8289	6.1667	0.1933	780.2537	754.4214	0.0000	0.0200
2-4	19.3357	193.8289	6.1667	0.2033	780.4098	754.2653	0.0000	0.0200
2-4	20.3357	194.8288	6.1667	0.2133	780.5659	754.1093	0.0000	0.0200
2-4	21.3357	195.8288	6.1667	0.2233	780.7220	753.9531	0.0000	0.0200
2-4	22.3357	196.8287	6.1667	0.2333	780.8782	753.7970	0.0000	0.0200
2-4	23.3357	197.8287	6.1667	0.2433	781.0343	753.6408	0.0000	0.0200
2-4	24.3357	198.8286	6.1667	0.2533	781.1906	753.4845	0.0000	0.0200
2-4	25.3357	199.8286	6.1667	0.2633	781.3468	753.3283	0.0000	0.0200
2-4	26.3357	200.8285	6.1667	0.2733	781.5031	753.1720	0.0000	0.0200
2-4	27.3357	201.8285	6.1667	0.2833	781.6594	753.0157	0.0000	0.0200

TENDON Back Deck D8-L, Calculations

Segment	Length (ft)	X (ft)	Y (ft)	Z (ft)	Force (kips)	Force after Anchor-Set (kips)	Angle Change (deg)	Force Loss (%)	Containing Element	Additional Info.
2-4	28.3357	202.8284	6.1667	0.2933	781.8158	752.8593	0.0000	0.0200		
2-4	29.3357	203.8284	6.1667	0.3033	781.9722	752.7030	0.0000	0.0200		
2-4	30.3357	204.8283	6.1667	0.3133	782.1286	752.5466	0.0000	0.0200		
2-4	31.3357	205.8283	6.1667	0.3233	782.2850	752.3901	0.0000	0.0200		
2-4	32.3357	206.8282	6.1667	0.3333	782.4415	752.2336	0.0000	0.0200		
2-4	33.3357	207.8282	6.1667	0.3433	782.5980	752.0771	0.0000	0.0200		
2-4	34.3357	208.8281	6.1667	0.3533	782.7545	751.9206	0.0000	0.0200		
2-4	35.3357	209.8281	6.1667	0.3633	782.9111	751.7640	0.0000	0.0200		
2-4	36.3357	210.8280	6.1667	0.3733	783.0677	751.6074	0.0000	0.0200		
2-4	37.3357	211.8280	6.1667	0.3833	783.2243	751.4508	0.0000	0.0200		
2-4	38.3357	212.8279	6.1667	0.3933	783.3810	751.2941	0.0000	0.0200		
2-4	39.3357	213.8279	6.1667	0.4033	783.5377	751.1375	0.0000	0.0200		
2-4	40.3357	214.8278	6.1667	0.4133	783.6944	750.9807	0.0000	0.0200		
2-4	41.3357	215.8278	6.1667	0.4233	783.8511	750.8240	0.0000	0.0200		
2-4	42.3357	216.8277	6.1667	0.4333	784.0079	750.6672	0.0000	0.0200		
2-4	43.3357	217.8277	6.1667	0.4433	784.1647	750.5104	0.0000	0.0200		
2-4	44.3357	218.8276	6.1667	0.4533	784.3216	750.3535	0.0000	0.0200		
2-4	45.3357	219.8276	6.1667	0.4633	784.4785	750.1966	0.0000	0.0200		
2-4	46.3357	220.8275	6.1667	0.4733	784.6354	750.0397	0.0000	0.0200		
2-4	47.3357	221.8275	6.1667	0.4833	784.7923	749.8828	0.0000	0.0200		
2-4	48.3357	222.8274	6.1667	0.4933	784.9493	749.7258	0.0000	0.0200		
2-4	49.3357	223.8274	6.1667	0.5033	785.1063	749.5688	0.0000	0.0200		
2-4	50.3357	224.8273	6.1667	0.5133	785.2633	749.4118	0.0000	0.0200		
2-4	51.3357	225.8273	6.1667	0.5233	785.4204	749.2547	0.0000	0.0200		
2-4	52.3357	226.8272	6.1667	0.5333	785.5775	749.0976	0.0000	0.0200		
2-4	53.3357	227.8272	6.1667	0.5433	785.7346	748.9405	0.0000	0.0200		
2-4	54.3357	228.8271	6.1667	0.5533	785.8918	748.7833	0.0000	0.0200		
2-4	55.3357	229.8271	6.1667	0.5633	786.0490	748.6261	0.0000	0.0200		
2-4	56.3357	230.8270	6.1667	0.5733	786.2062	748.4689	0.0000	0.0200		
2-4	57.3357	231.8270	6.1667	0.5833	786.3635	748.3116	0.0000	0.0200		
2-4	58.3357	232.8269	6.1667	0.5933	786.5208	748.1543	0.0000	0.0200		
2-4	59.3357	233.8269	6.1667	0.6033	786.6781	747.9970	0.0000	0.0200		
2-4	60.3357	234.8268	6.1667	0.6133	786.8354	747.8397	0.0000	0.0200		
2-4	61.3357	235.8268	6.1667	0.6233	786.9928	747.6823	0.0000	0.0200		

TENDON Back Deck D8-L, Calculations

Segment	Length (ft)	X (ft)	Y (ft)	Z (ft)	Force (kips)	Force after Anchor-Set (kips)	Angle Change (deg)	Force Loss (%)	Containing Element	Additional Info.
2-4	62.3357	236.8267	6.1667	0.6333	787.1502	747.5249	0.0000	0.0200		
2-4	63.3357	237.8267	6.1667	0.6433	787.3077	747.3674	0.0000	0.0200		
2-4	64.3357	238.8266	6.1667	0.6533	787.4652	747.2100	0.0000	0.0200		
2-4	65.3357	239.8266	6.1667	0.6633	787.6227	747.0524	0.0000	0.0200		
2-4	66.3357	240.8265	6.1667	0.6733	787.7802	746.8949	0.0000	0.0200		
2-4	67.3357	241.8265	6.1667	0.6833	787.9378	746.7373	0.0000	0.0200		
2-4	68.3357	242.8264	6.1667	0.6933	788.0954	746.5797	0.0000	0.0200		
2-4	69.3357	243.8264	6.1667	0.7033	788.2530	746.4221	0.0000	0.0200		
2-4	70.3357	244.8263	6.1667	0.7133	788.4107	746.2644	0.0000	0.0200		
2-4	71.3357	245.8263	6.1667	0.7233	788.5684	746.1067	0.0000	0.0200		
2-4	72.3357	246.8262	6.1667	0.7333	788.7261	745.9490	0.0000	0.0200		
2-4	73.3357	247.8262	6.1667	0.7433	788.8839	745.7912	0.0000	0.0200		
2-4	74.3357	248.8261	6.1667	0.7533	789.0417	745.6335	0.0000	0.0200		
2-4	75.3357	249.8261	6.1667	0.7633	789.1995	745.4756	0.0000	0.0200		
2-4	76.3357	250.8260	6.1667	0.7733	789.3573	745.3178	0.0000	0.0200		
2-4	77.3357	251.8260	6.1667	0.7833	789.5152	745.1599	0.0000	0.0200		
2-4	78.3357	252.8259	6.1667	0.7933	789.6732	745.0020	0.0000	0.0200		
2-4	79.3357	253.8259	6.1667	0.8033	789.8311	744.8440	0.0000	0.0200		
2-4	80.3357	254.8258	6.1667	0.8133	789.9891	744.6860	0.0000	0.0200		
2-4	81.3357	255.8258	6.1667	0.8233	790.1471	744.5280	0.0000	0.0200		
2-4	82.3357	256.8257	6.1667	0.8333	790.3051	744.3700	0.0000	0.0200		
2-4	83.3357	257.8257	6.1667	0.8433	790.4632	744.2119	0.0000	0.0200		
2-4	84.3357	258.8256	6.1667	0.8533	790.6213	744.0538	0.0000	0.0200		
2-4	85.3357	259.8256	6.1667	0.8633	790.7795	743.8956	0.0000	0.0200		
2-4	86.3357	260.8255	6.1667	0.8733	790.9376	743.7375	0.0000	0.0200		
2-4	87.3357	261.8255	6.1667	0.8833	791.0958	743.5793	0.0000	0.0200		
2-4	88.3357	262.8254	6.1667	0.8933	791.2541	743.4210	0.0000	0.0200		
2-4	89.3357	263.8254	6.1667	0.9033	791.4123	743.2628	0.0000	0.0200		
2-4	90.3357	264.8253	6.1667	0.9133	791.5706	743.1045	0.0000	0.0200		
2-4	91.3357	265.8253	6.1667	0.9233	791.7290	742.9461	0.0000	0.0200		
2-4	92.3357	266.8252	6.1667	0.9333	791.8873	742.7878	0.0000	0.0200		
2-4	93.3357	267.8252	6.1667	0.9433	792.0457	742.6294	0.0000	0.0200		
2-4	94.3357	268.8251	6.1667	0.9533	792.2042	742.4710	0.0000	0.0077		
4	94.7194	269.2088	6.1667	0.9571	792.2649	742.4102	2.4993	1.1019		

TENDON Back Deck D8-L, Calculations

Segment	Length (ft)	X (ft)	Y (ft)	Z (ft)	Force (kips)	Force after Anchor-Set (kips)	Angle Change (deg)	Force Loss (%)	Containing Element	Additional Info.
4	95.5915	270.0804	6.1667	0.9278	801.0919	733.5833	4.9986	2.1745		
4	96.4637	270.9462	6.1667	0.8226	818.8990	715.7761	2.4993	1.0991		
6	97.1986	271.6713	6.1667	0.7023	827.9999	706.6752	0.0000	0.0147		
6	97.9336	272.3963	6.1667	0.5819	828.1216	706.5535	0.0000	0.0147		
6	98.6686	273.1214	6.1667	0.4616	828.2434	706.4317	0.0000	0.0044		
6	98.8892	273.3390	6.1667	0.4254	828.2799	706.3952	0.0000	0.0000		

TENDON Back Deck D8-R, Calculations

Segment	Length (ft)	X (ft)	Y (ft)	Z (ft)	Force (kips)	Force after Anchor-Set (kips)	Angle Change (deg)	Force Loss (%)
1	0.0000	174.5018	-6.1667	-0.1775	764.6648	764.6648	0.0000	0.0200
1-2	1.0000	175.4989	-6.1667	-0.1015	764.8177	764.8177	0.0000	0.0200
1-2	2.0000	176.4960	-6.1667	-0.0255	764.9707	764.9707	0.0000	0.0069
2	2.3449	176.8399	-6.1667	0.0007	765.0235	765.0235	0.9462	0.4219
2	2.8403	177.3345	-6.1667	0.0302	768.2646	766.4105	1.8924	0.8321
2	3.3357	177.8297	-6.1667	0.0433	774.7114	759.9638	0.9462	0.4319
2-4	4.3357	178.8296	-6.1667	0.0533	778.0720	756.6031	0.0000	0.0200
2-4	5.3357	179.8296	-6.1667	0.0633	778.2277	756.4474	0.0000	0.0200
2-4	6.3357	180.8295	-6.1667	0.0733	778.3833	756.2918	0.0000	0.0200
2-4	7.3357	181.8295	-6.1667	0.0833	778.5390	756.1361	0.0000	0.0200
2-4	8.3357	182.8294	-6.1667	0.0933	778.6948	755.9804	0.0000	0.0200
2-4	9.3357	183.8294	-6.1667	0.1033	778.8505	755.8246	0.0000	0.0200
2-4	10.3357	184.8293	-6.1667	0.1133	779.0063	755.6688	0.0000	0.0200
2-4	11.3357	185.8293	-6.1667	0.1233	779.1621	755.5130	0.0000	0.0200
2-4	12.3357	186.8292	-6.1667	0.1333	779.3180	755.3572	0.0000	0.0200
2-4	13.3357	187.8292	-6.1667	0.1433	779.4738	755.2013	0.0000	0.0200
2-4	14.3357	188.8291	-6.1667	0.1533	779.6298	755.0454	0.0000	0.0200
2-4	15.3357	189.8291	-6.1667	0.1633	779.7857	754.8894	0.0000	0.0200
2-4	16.3357	190.8290	-6.1667	0.1733	779.9417	754.7335	0.0000	0.0200
2-4	17.3357	191.8290	-6.1667	0.1833	780.0977	754.5774	0.0000	0.0200
2-4	18.3357	192.8289	-6.1667	0.1933	780.2537	754.4214	0.0000	0.0200
2-4	19.3357	193.8289	-6.1667	0.2033	780.4098	754.2653	0.0000	0.0200
2-4	20.3357	194.8288	-6.1667	0.2133	780.5659	754.1093	0.0000	0.0200

TENDON Back Deck D8-R, Calculations

Segment	Length (ft)	X (ft)	Y (ft)	Z (ft)	Force (kips)	Force after Anchor-Set (kips)	Angle Change (deg)	Force Loss (%)	Containing Element	Additional Info.
2-4	21.3357	195.8288	-6.1667	0.2233	780.7220	753.9531	0.0000	0.0200		
2-4	22.3357	196.8287	-6.1667	0.2333	780.8782	753.7970	0.0000	0.0200		
2-4	23.3357	197.8287	-6.1667	0.2433	781.0343	753.6408	0.0000	0.0200		
2-4	24.3357	198.8286	-6.1667	0.2533	781.1906	753.4845	0.0000	0.0200		
2-4	25.3357	199.8286	-6.1667	0.2633	781.3468	753.3283	0.0000	0.0200		
2-4	26.3357	200.8285	-6.1667	0.2733	781.5031	753.1720	0.0000	0.0200		
2-4	27.3357	201.8285	-6.1667	0.2833	781.6594	753.0157	0.0000	0.0200		
2-4	28.3357	202.8284	-6.1667	0.2933	781.8158	752.8593	0.0000	0.0200		
2-4	29.3357	203.8284	-6.1667	0.3033	781.9722	752.7030	0.0000	0.0200		
2-4	30.3357	204.8283	-6.1667	0.3133	782.1286	752.5466	0.0000	0.0200		
2-4	31.3357	205.8283	-6.1667	0.3233	782.2850	752.3901	0.0000	0.0200		
2-4	32.3357	206.8282	-6.1667	0.3333	782.4415	752.2336	0.0000	0.0200		
2-4	33.3357	207.8282	-6.1667	0.3433	782.5980	752.0771	0.0000	0.0200		
2-4	34.3357	208.8281	-6.1667	0.3533	782.7545	751.9206	0.0000	0.0200		
2-4	35.3357	209.8281	-6.1667	0.3633	782.9111	751.7640	0.0000	0.0200		
2-4	36.3357	210.8280	-6.1667	0.3733	783.0677	751.6074	0.0000	0.0200		
2-4	37.3357	211.8280	-6.1667	0.3833	783.2243	751.4508	0.0000	0.0200		
2-4	38.3357	212.8279	-6.1667	0.3933	783.3810	751.2941	0.0000	0.0200		
2-4	39.3357	213.8279	-6.1667	0.4033	783.5377	751.1375	0.0000	0.0200		
2-4	40.3357	214.8278	-6.1667	0.4133	783.6944	750.9807	0.0000	0.0200		
2-4	41.3357	215.8278	-6.1667	0.4233	783.8511	750.8240	0.0000	0.0200		
2-4	42.3357	216.8277	-6.1667	0.4333	784.0079	750.6672	0.0000	0.0200		
2-4	43.3357	217.8277	-6.1667	0.4433	784.1647	750.5104	0.0000	0.0200		
2-4	44.3357	218.8276	-6.1667	0.4533	784.3216	750.3535	0.0000	0.0200		
2-4	45.3357	219.8276	-6.1667	0.4633	784.4785	750.1966	0.0000	0.0200		
2-4	46.3357	220.8275	-6.1667	0.4733	784.6354	750.0397	0.0000	0.0200		
2-4	47.3357	221.8275	-6.1667	0.4833	784.7923	749.8828	0.0000	0.0200		
2-4	48.3357	222.8274	-6.1667	0.4933	784.9493	749.7258	0.0000	0.0200		
2-4	49.3357	223.8274	-6.1667	0.5033	785.1063	749.5688	0.0000	0.0200		
2-4	50.3357	224.8273	-6.1667	0.5133	785.2633	749.4118	0.0000	0.0200		
2-4	51.3357	225.8273	-6.1667	0.5233	785.4204	749.2547	0.0000	0.0200		
2-4	52.3357	226.8272	-6.1667	0.5333	785.5775	749.0976	0.0000	0.0200		
2-4	53.3357	227.8272	-6.1667	0.5433	785.7346	748.9405	0.0000	0.0200		
2-4	54.3357	228.8271	-6.1667	0.5533	785.8918	748.7833	0.0000	0.0200		

TENDON Back Deck D8-R, Calculations

Segment	Length (ft)	X (ft)	Y (ft)	Z (ft)	Force (kips)	Force after Anchor-Set (kips)	Angle Change (deg)	Force Loss (%)	Containing Element	Additional Info.
2-4	55.3357	229.8271	-6.1667	0.5633	786.0490	748.6261	0.0000	0.0200		
2-4	56.3357	230.8270	-6.1667	0.5733	786.2062	748.4689	0.0000	0.0200		
2-4	57.3357	231.8270	-6.1667	0.5833	786.3635	748.3116	0.0000	0.0200		
2-4	58.3357	232.8269	-6.1667	0.5933	786.5208	748.1543	0.0000	0.0200		
2-4	59.3357	233.8269	-6.1667	0.6033	786.6781	747.9970	0.0000	0.0200		
2-4	60.3357	234.8268	-6.1667	0.6133	786.8354	747.8397	0.0000	0.0200		
2-4	61.3357	235.8268	-6.1667	0.6233	786.9928	747.6823	0.0000	0.0200		
2-4	62.3357	236.8267	-6.1667	0.6333	787.1502	747.5249	0.0000	0.0200		
2-4	63.3357	237.8267	-6.1667	0.6433	787.3077	747.3674	0.0000	0.0200		
2-4	64.3357	238.8266	-6.1667	0.6533	787.4652	747.2100	0.0000	0.0200		
2-4	65.3357	239.8266	-6.1667	0.6633	787.6227	747.0524	0.0000	0.0200		
2-4	66.3357	240.8265	-6.1667	0.6733	787.7802	746.8949	0.0000	0.0200		
2-4	67.3357	241.8265	-6.1667	0.6833	787.9378	746.7373	0.0000	0.0200		
2-4	68.3357	242.8264	-6.1667	0.6933	788.0954	746.5797	0.0000	0.0200		
2-4	69.3357	243.8264	-6.1667	0.7033	788.2530	746.4221	0.0000	0.0200		
2-4	70.3357	244.8263	-6.1667	0.7133	788.4107	746.2644	0.0000	0.0200		
2-4	71.3357	245.8263	-6.1667	0.7233	788.5684	746.1067	0.0000	0.0200		
2-4	72.3357	246.8262	-6.1667	0.7333	788.7261	745.9490	0.0000	0.0200		
2-4	73.3357	247.8262	-6.1667	0.7433	788.8839	745.7912	0.0000	0.0200		
2-4	74.3357	248.8261	-6.1667	0.7533	789.0417	745.6335	0.0000	0.0200		
2-4	75.3357	249.8261	-6.1667	0.7633	789.1995	745.4756	0.0000	0.0200		
2-4	76.3357	250.8260	-6.1667	0.7733	789.3573	745.3178	0.0000	0.0200		
2-4	77.3357	251.8260	-6.1667	0.7833	789.5152	745.1599	0.0000	0.0200		
2-4	78.3357	252.8259	-6.1667	0.7933	789.6732	745.0020	0.0000	0.0200		
2-4	79.3357	253.8259	-6.1667	0.8033	789.8311	744.8440	0.0000	0.0200		
2-4	80.3357	254.8258	-6.1667	0.8133	789.9891	744.6860	0.0000	0.0200		
2-4	81.3357	255.8258	-6.1667	0.8233	790.1471	744.5280	0.0000	0.0200		
2-4	82.3357	256.8257	-6.1667	0.8333	790.3051	744.3700	0.0000	0.0200		
2-4	83.3357	257.8257	-6.1667	0.8433	790.4632	744.2119	0.0000	0.0200		
2-4	84.3357	258.8256	-6.1667	0.8533	790.6213	744.0538	0.0000	0.0200		
2-4	85.3357	259.8256	-6.1667	0.8633	790.7795	743.8956	0.0000	0.0200		
2-4	86.3357	260.8255	-6.1667	0.8733	790.9376	743.7375	0.0000	0.0200		
2-4	87.3357	261.8255	-6.1667	0.8833	791.0958	743.5793	0.0000	0.0200		
2-4	88.3357	262.8254	-6.1667	0.8933	791.2541	743.4210	0.0000	0.0200		

TENDON Back Deck D8-R, Calculations

Segment	Length (ft)	X (ft)	Y (ft)	Z (ft)	Force (kips)	Force after Anchor-Set (kips)	Angle Change (deg)	Force Loss (%)	Containing Element	Additional Info.
2-4	89.3357	263.8254	-6.1667	0.9033	791.4123	743.2628	0.0000	0.0200		
2-4	90.3357	264.8253	-6.1667	0.9133	791.5706	743.1045	0.0000	0.0200		
2-4	91.3357	265.8253	-6.1667	0.9233	791.7290	742.9461	0.0000	0.0200		
2-4	92.3357	266.8252	-6.1667	0.9333	791.8873	742.7878	0.0000	0.0200		
2-4	93.3357	267.8252	-6.1667	0.9433	792.0457	742.6294	0.0000	0.0200		
2-4	94.3357	268.8251	-6.1667	0.9533	792.2042	742.4710	0.0000	0.0077		
4	94.7194	269.2088	-6.1667	0.9571	792.2649	742.4102	2.4993	1.1019		
4	95.5915	270.0804	-6.1667	0.9278	801.0919	733.5833	4.9986	2.1745		
4	96.4637	270.9462	-6.1667	0.8226	818.8990	715.7761	2.4993	1.0991		
6	97.1986	271.6713	-6.1667	0.7023	827.9999	706.6752	0.0000	0.0147		
6	97.9336	272.3963	-6.1667	0.5819	828.1216	706.5535	0.0000	0.0147		
6	98.6686	273.1214	-6.1667	0.4616	828.2434	706.4317	0.0000	0.0044		
6	98.8892	273.3390	-6.1667	0.4254	828.2799	706.3952	0.0000	0.0000		

TENDON Back Deck D9-L, Calculations

Segment	Length (ft)	X (ft)	Y (ft)	Z (ft)	Force (kips)	Force after Anchor-Set (kips)	Angle Change (deg)	Force Loss (%)
1	0.0000	174.5018	7.6667	-0.1775	764.6648	764.6648	0.0000	0.0200
1-2	1.0000	175.4989	7.6667	-0.1015	764.8177	764.8177	0.0000	0.0200
1-2	2.0000	176.4960	7.6667	-0.0255	764.9707	764.9707	0.0000	0.0069
2	2.3449	176.8399	7.6667	0.0007	765.0235	765.0235	0.9462	0.4219
2	2.8403	177.3345	7.6667	0.0302	768.2646	766.4105	1.8924	0.8321
2	3.3357	177.8297	7.6667	0.0433	774.7114	759.9638	0.9462	0.4319
2-4	4.3357	178.8296	7.6667	0.0533	778.0720	756.6031	0.0000	0.0200
2-4	5.3357	179.8296	7.6667	0.0633	778.2277	756.4474	0.0000	0.0200
2-4	6.3357	180.8295	7.6667	0.0733	778.3833	756.2918	0.0000	0.0200
2-4	7.3357	181.8295	7.6667	0.0833	778.5390	756.1361	0.0000	0.0200
2-4	8.3357	182.8294	7.6667	0.0933	778.6948	755.9804	0.0000	0.0200
2-4	9.3357	183.8294	7.6667	0.1033	778.8505	755.8246	0.0000	0.0200
2-4	10.3357	184.8293	7.6667	0.1133	779.0063	755.6688	0.0000	0.0200
2-4	11.3357	185.8293	7.6667	0.1233	779.1621	755.5130	0.0000	0.0200
2-4	12.3357	186.8292	7.6667	0.1333	779.3180	755.3572	0.0000	0.0200
2-4	13.3357	187.8292	7.6667	0.1433	779.4738	755.2013	0.0000	0.0200

TENDON Back Deck D9-L, Calculations

Segment	Length (ft)	X (ft)	Y (ft)	Z (ft)	Force (kips)	Force after Anchor-Set (kips)	Angle Change (deg)	Force Loss (%)	Containing Element	Additional Info.
2-4	14.3357	188.8291	7.6667	0.1533	779.6298	755.0454	0.0000	0.0200		
2-4	15.3357	189.8291	7.6667	0.1633	779.7857	754.8894	0.0000	0.0200		
2-4	16.3357	190.8290	7.6667	0.1733	779.9417	754.7335	0.0000	0.0200		
2-4	17.3357	191.8290	7.6667	0.1833	780.0977	754.5774	0.0000	0.0200		
2-4	18.3357	192.8289	7.6667	0.1933	780.2537	754.4214	0.0000	0.0200		
2-4	19.3357	193.8289	7.6667	0.2033	780.4098	754.2653	0.0000	0.0200		
2-4	20.3357	194.8288	7.6667	0.2133	780.5659	754.1093	0.0000	0.0200		
2-4	21.3357	195.8288	7.6667	0.2233	780.7220	753.9531	0.0000	0.0200		
2-4	22.3357	196.8287	7.6667	0.2333	780.8782	753.7970	0.0000	0.0200		
2-4	23.3357	197.8287	7.6667	0.2433	781.0343	753.6408	0.0000	0.0200		
2-4	24.3357	198.8286	7.6667	0.2533	781.1906	753.4845	0.0000	0.0200		
2-4	25.3357	199.8286	7.6667	0.2633	781.3468	753.3283	0.0000	0.0200		
2-4	26.3357	200.8285	7.6667	0.2733	781.5031	753.1720	0.0000	0.0200		
2-4	27.3357	201.8285	7.6667	0.2833	781.6594	753.0157	0.0000	0.0200		
2-4	28.3357	202.8284	7.6667	0.2933	781.8158	752.8593	0.0000	0.0200		
2-4	29.3357	203.8284	7.6667	0.3033	781.9722	752.7030	0.0000	0.0200		
2-4	30.3357	204.8283	7.6667	0.3133	782.1286	752.5466	0.0000	0.0200		
2-4	31.3357	205.8283	7.6667	0.3233	782.2850	752.3901	0.0000	0.0200		
2-4	32.3357	206.8282	7.6667	0.3333	782.4415	752.2336	0.0000	0.0200		
2-4	33.3357	207.8282	7.6667	0.3433	782.5980	752.0771	0.0000	0.0200		
2-4	34.3357	208.8281	7.6667	0.3533	782.7545	751.9206	0.0000	0.0200		
2-4	35.3357	209.8281	7.6667	0.3633	782.9111	751.7640	0.0000	0.0200		
2-4	36.3357	210.8280	7.6667	0.3733	783.0677	751.6074	0.0000	0.0200		
2-4	37.3357	211.8280	7.6667	0.3833	783.2243	751.4508	0.0000	0.0200		
2-4	38.3357	212.8279	7.6667	0.3933	783.3810	751.2941	0.0000	0.0200		
2-4	39.3357	213.8279	7.6667	0.4033	783.5377	751.1375	0.0000	0.0200		
2-4	40.3357	214.8278	7.6667	0.4133	783.6944	750.9807	0.0000	0.0200		
2-4	41.3357	215.8278	7.6667	0.4233	783.8511	750.8240	0.0000	0.0200		
2-4	42.3357	216.8277	7.6667	0.4333	784.0079	750.6672	0.0000	0.0200		
2-4	43.3357	217.8277	7.6667	0.4433	784.1647	750.5104	0.0000	0.0200		
2-4	44.3357	218.8276	7.6667	0.4533	784.3216	750.3535	0.0000	0.0200		
2-4	45.3357	219.8276	7.6667	0.4633	784.4785	750.1966	0.0000	0.0200		
2-4	46.3357	220.8275	7.6667	0.4733	784.6354	750.0397	0.0000	0.0200		
2-4	47.3357	221.8275	7.6667	0.4833	784.7923	749.8828	0.0000	0.0200		

TENDON Back Deck D9-L, Calculations

Segment	Length (ft)	X (ft)	Y (ft)	Z (ft)	Force (kips)	Force after Anchor-Set (kips)	Angle Change (deg)	Force Loss (%)	Containing Element	Additional Info.
2-4	48.3357	222.8274	7.6667	0.4933	784.9493	749.7258	0.0000	0.0200		
2-4	49.3357	223.8274	7.6667	0.5033	785.1063	749.5688	0.0000	0.0200		
2-4	50.3357	224.8273	7.6667	0.5133	785.2633	749.4118	0.0000	0.0200		
2-4	51.3357	225.8273	7.6667	0.5233	785.4204	749.2547	0.0000	0.0200		
2-4	52.3357	226.8272	7.6667	0.5333	785.5775	749.0976	0.0000	0.0200		
2-4	53.3357	227.8272	7.6667	0.5433	785.7346	748.9405	0.0000	0.0200		
2-4	54.3357	228.8271	7.6667	0.5533	785.8918	748.7833	0.0000	0.0200		
2-4	55.3357	229.8271	7.6667	0.5633	786.0490	748.6261	0.0000	0.0200		
2-4	56.3357	230.8270	7.6667	0.5733	786.2062	748.4689	0.0000	0.0200		
2-4	57.3357	231.8270	7.6667	0.5833	786.3635	748.3116	0.0000	0.0200		
2-4	58.3357	232.8269	7.6667	0.5933	786.5208	748.1543	0.0000	0.0200		
2-4	59.3357	233.8269	7.6667	0.6033	786.6781	747.9970	0.0000	0.0200		
2-4	60.3357	234.8268	7.6667	0.6133	786.8354	747.8397	0.0000	0.0200		
2-4	61.3357	235.8268	7.6667	0.6233	786.9928	747.6823	0.0000	0.0200		
2-4	62.3357	236.8267	7.6667	0.6333	787.1502	747.5249	0.0000	0.0200		
2-4	63.3357	237.8267	7.6667	0.6433	787.3077	747.3674	0.0000	0.0200		
2-4	64.3357	238.8266	7.6667	0.6533	787.4652	747.2100	0.0000	0.0200		
2-4	65.3357	239.8266	7.6667	0.6633	787.6227	747.0524	0.0000	0.0200		
2-4	66.3357	240.8265	7.6667	0.6733	787.7802	746.8949	0.0000	0.0200		
2-4	67.3357	241.8265	7.6667	0.6833	787.9378	746.7373	0.0000	0.0200		
2-4	68.3357	242.8264	7.6667	0.6933	788.0954	746.5797	0.0000	0.0200		
2-4	69.3357	243.8264	7.6667	0.7033	788.2530	746.4221	0.0000	0.0200		
2-4	70.3357	244.8263	7.6667	0.7133	788.4107	746.2644	0.0000	0.0200		
2-4	71.3357	245.8263	7.6667	0.7233	788.5684	746.1067	0.0000	0.0200		
2-4	72.3357	246.8262	7.6667	0.7333	788.7261	745.9490	0.0000	0.0200		
2-4	73.3357	247.8262	7.6667	0.7433	788.8839	745.7912	0.0000	0.0200		
2-4	74.3357	248.8261	7.6667	0.7533	789.0417	745.6335	0.0000	0.0200		
2-4	75.3357	249.8261	7.6667	0.7633	789.1995	745.4756	0.0000	0.0200		
2-4	76.3357	250.8260	7.6667	0.7733	789.3573	745.3178	0.0000	0.0200		
2-4	77.3357	251.8260	7.6667	0.7833	789.5152	745.1599	0.0000	0.0200		
2-4	78.3357	252.8259	7.6667	0.7933	789.6732	745.0020	0.0000	0.0200		
2-4	79.3357	253.8259	7.6667	0.8033	789.8311	744.8440	0.0000	0.0200		
2-4	80.3357	254.8258	7.6667	0.8133	789.9891	744.6860	0.0000	0.0200		
2-4	81.3357	255.8258	7.6667	0.8233	790.1471	744.5280	0.0000	0.0200		

TENDON Back Deck D9-L, Calculations

Segment	Length (ft)	X (ft)	Y (ft)	Z (ft)	Force (kips)	Force after Anchor-Set (kips)	Angle Change (deg)	Force Loss (%)	Containing Element	Additional Info.
2-4	82.3357	256.8257	7.6667	0.8333	790.3051	744.3700	0.0000	0.0200		
2-4	83.3357	257.8257	7.6667	0.8433	790.4632	744.2119	0.0000	0.0200		
2-4	84.3357	258.8256	7.6667	0.8533	790.6213	744.0538	0.0000	0.0200		
2-4	85.3357	259.8256	7.6667	0.8633	790.7795	743.8956	0.0000	0.0200		
2-4	86.3357	260.8255	7.6667	0.8733	790.9376	743.7375	0.0000	0.0200		
2-4	87.3357	261.8255	7.6667	0.8833	791.0958	743.5793	0.0000	0.0200		
2-4	88.3357	262.8254	7.6667	0.8933	791.2541	743.4210	0.0000	0.0200		
2-4	89.3357	263.8254	7.6667	0.9033	791.4123	743.2628	0.0000	0.0200		
2-4	90.3357	264.8253	7.6667	0.9133	791.5706	743.1045	0.0000	0.0200		
2-4	91.3357	265.8253	7.6667	0.9233	791.7290	742.9461	0.0000	0.0200		
2-4	92.3357	266.8252	7.6667	0.9333	791.8873	742.7878	0.0000	0.0200		
2-4	93.3357	267.8252	7.6667	0.9433	792.0457	742.6294	0.0000	0.0200		
2-4	94.3357	268.8251	7.6667	0.9533	792.2042	742.4710	0.0000	0.0077		
4	94.7194	269.2088	7.6667	0.9571	792.2649	742.4102	2.4993	1.1019		
4	95.5915	270.0804	7.6667	0.9278	801.0919	733.5833	4.9986	2.1745		
4	96.4637	270.9462	7.6667	0.8226	818.8990	715.7761	2.4993	1.0991		
6	97.1986	271.6713	7.6667	0.7023	827.9999	706.6752	0.0000	0.0147		
6	97.9336	272.3963	7.6667	0.5819	828.1216	706.5535	0.0000	0.0147		
6	98.6686	273.1214	7.6667	0.4616	828.2434	706.4317	0.0000	0.0044		
6	98.8892	273.3390	7.6667	0.4254	828.2799	706.3952	0.0000	0.0000		

TENDON Back Deck D9-R, Calculations

Segment	Length (ft)	X (ft)	Y (ft)	Z (ft)	Force (kips)	Force after Anchor-Set (kips)	Angle Change (deg)	Force Loss (%)
1	0.0000	174.5018	-7.6667	-0.1775	764.6648	764.6648	0.0000	0.0200
1-2	1.0000	175.4989	-7.6667	-0.1015	764.8177	764.8177	0.0000	0.0200
1-2	2.0000	176.4960	-7.6667	-0.0255	764.9707	764.9707	0.0000	0.0069
2	2.3449	176.8399	-7.6667	0.0007	765.0235	765.0235	0.9462	0.4219
2	2.8403	177.3345	-7.6667	0.0302	768.2646	766.4105	1.8924	0.8321
2	3.3357	177.8297	-7.6667	0.0433	774.7114	759.9638	0.9462	0.4319
2-4	4.3357	178.8296	-7.6667	0.0533	778.0720	756.6031	0.0000	0.0200
2-4	5.3357	179.8296	-7.6667	0.0633	778.2277	756.4474	0.0000	0.0200
2-4	6.3357	180.8295	-7.6667	0.0733	778.3833	756.2918	0.0000	0.0200

TENDON Back Deck D9-R, Calculations

Segment	Length (ft)	X (ft)	Y (ft)	Z (ft)	Force (kips)	Force after Anchor-Set (kips)	Angle Change (deg)	Force Loss (%)	Containing Element	Additional Info.
2-4	7.3357	181.8295	-7.6667	0.0833	778.5390	756.1361	0.0000	0.0200		
2-4	8.3357	182.8294	-7.6667	0.0933	778.6948	755.9804	0.0000	0.0200		
2-4	9.3357	183.8294	-7.6667	0.1033	778.8505	755.8246	0.0000	0.0200		
2-4	10.3357	184.8293	-7.6667	0.1133	779.0063	755.6688	0.0000	0.0200		
2-4	11.3357	185.8293	-7.6667	0.1233	779.1621	755.5130	0.0000	0.0200		
2-4	12.3357	186.8292	-7.6667	0.1333	779.3180	755.3572	0.0000	0.0200		
2-4	13.3357	187.8292	-7.6667	0.1433	779.4738	755.2013	0.0000	0.0200		
2-4	14.3357	188.8291	-7.6667	0.1533	779.6298	755.0454	0.0000	0.0200		
2-4	15.3357	189.8291	-7.6667	0.1633	779.7857	754.8894	0.0000	0.0200		
2-4	16.3357	190.8290	-7.6667	0.1733	779.9417	754.7335	0.0000	0.0200		
2-4	17.3357	191.8290	-7.6667	0.1833	780.0977	754.5774	0.0000	0.0200		
2-4	18.3357	192.8289	-7.6667	0.1933	780.2537	754.4214	0.0000	0.0200		
2-4	19.3357	193.8289	-7.6667	0.2033	780.4098	754.2653	0.0000	0.0200		
2-4	20.3357	194.8288	-7.6667	0.2133	780.5659	754.1093	0.0000	0.0200		
2-4	21.3357	195.8288	-7.6667	0.2233	780.7220	753.9531	0.0000	0.0200		
2-4	22.3357	196.8287	-7.6667	0.2333	780.8782	753.7970	0.0000	0.0200		
2-4	23.3357	197.8287	-7.6667	0.2433	781.0343	753.6408	0.0000	0.0200		
2-4	24.3357	198.8286	-7.6667	0.2533	781.1906	753.4845	0.0000	0.0200		
2-4	25.3357	199.8286	-7.6667	0.2633	781.3468	753.3283	0.0000	0.0200		
2-4	26.3357	200.8285	-7.6667	0.2733	781.5031	753.1720	0.0000	0.0200		
2-4	27.3357	201.8285	-7.6667	0.2833	781.6594	753.0157	0.0000	0.0200		
2-4	28.3357	202.8284	-7.6667	0.2933	781.8158	752.8593	0.0000	0.0200		
2-4	29.3357	203.8284	-7.6667	0.3033	781.9722	752.7030	0.0000	0.0200		
2-4	30.3357	204.8283	-7.6667	0.3133	782.1286	752.5466	0.0000	0.0200		
2-4	31.3357	205.8283	-7.6667	0.3233	782.2850	752.3901	0.0000	0.0200		
2-4	32.3357	206.8282	-7.6667	0.3333	782.4415	752.2336	0.0000	0.0200		
2-4	33.3357	207.8282	-7.6667	0.3433	782.5980	752.0771	0.0000	0.0200		
2-4	34.3357	208.8281	-7.6667	0.3533	782.7545	751.9206	0.0000	0.0200		
2-4	35.3357	209.8281	-7.6667	0.3633	782.9111	751.7640	0.0000	0.0200		
2-4	36.3357	210.8280	-7.6667	0.3733	783.0677	751.6074	0.0000	0.0200		
2-4	37.3357	211.8280	-7.6667	0.3833	783.2243	751.4508	0.0000	0.0200		
2-4	38.3357	212.8279	-7.6667	0.3933	783.3810	751.2941	0.0000	0.0200		
2-4	39.3357	213.8279	-7.6667	0.4033	783.5377	751.1375	0.0000	0.0200		
2-4	40.3357	214.8278	-7.6667	0.4133	783.6944	750.9807	0.0000	0.0200		

TENDON Back Deck D9-R, Calculations

Segment	Length (ft)	X (ft)	Y (ft)	Z (ft)	Force (kips)	Force after Anchor-Set (kips)	Angle Change (deg)	Force Loss (%)	Containing Element	Additional Info.
2-4	41.3357	215.8278	-7.6667	0.4233	783.8511	750.8240	0.0000	0.0200		
2-4	42.3357	216.8277	-7.6667	0.4333	784.0079	750.6672	0.0000	0.0200		
2-4	43.3357	217.8277	-7.6667	0.4433	784.1647	750.5104	0.0000	0.0200		
2-4	44.3357	218.8276	-7.6667	0.4533	784.3216	750.3535	0.0000	0.0200		
2-4	45.3357	219.8276	-7.6667	0.4633	784.4785	750.1966	0.0000	0.0200		
2-4	46.3357	220.8275	-7.6667	0.4733	784.6354	750.0397	0.0000	0.0200		
2-4	47.3357	221.8275	-7.6667	0.4833	784.7923	749.8828	0.0000	0.0200		
2-4	48.3357	222.8274	-7.6667	0.4933	784.9493	749.7258	0.0000	0.0200		
2-4	49.3357	223.8274	-7.6667	0.5033	785.1063	749.5688	0.0000	0.0200		
2-4	50.3357	224.8273	-7.6667	0.5133	785.2633	749.4118	0.0000	0.0200		
2-4	51.3357	225.8273	-7.6667	0.5233	785.4204	749.2547	0.0000	0.0200		
2-4	52.3357	226.8272	-7.6667	0.5333	785.5775	749.0976	0.0000	0.0200		
2-4	53.3357	227.8272	-7.6667	0.5433	785.7346	748.9405	0.0000	0.0200		
2-4	54.3357	228.8271	-7.6667	0.5533	785.8918	748.7833	0.0000	0.0200		
2-4	55.3357	229.8271	-7.6667	0.5633	786.0490	748.6261	0.0000	0.0200		
2-4	56.3357	230.8270	-7.6667	0.5733	786.2062	748.4689	0.0000	0.0200		
2-4	57.3357	231.8270	-7.6667	0.5833	786.3635	748.3116	0.0000	0.0200		
2-4	58.3357	232.8269	-7.6667	0.5933	786.5208	748.1543	0.0000	0.0200		
2-4	59.3357	233.8269	-7.6667	0.6033	786.6781	747.9970	0.0000	0.0200		
2-4	60.3357	234.8268	-7.6667	0.6133	786.8354	747.8397	0.0000	0.0200		
2-4	61.3357	235.8268	-7.6667	0.6233	786.9928	747.6823	0.0000	0.0200		
2-4	62.3357	236.8267	-7.6667	0.6333	787.1502	747.5249	0.0000	0.0200		
2-4	63.3357	237.8267	-7.6667	0.6433	787.3077	747.3674	0.0000	0.0200		
2-4	64.3357	238.8266	-7.6667	0.6533	787.4652	747.2100	0.0000	0.0200		
2-4	65.3357	239.8266	-7.6667	0.6633	787.6227	747.0524	0.0000	0.0200		
2-4	66.3357	240.8265	-7.6667	0.6733	787.7802	746.8949	0.0000	0.0200		
2-4	67.3357	241.8265	-7.6667	0.6833	787.9378	746.7373	0.0000	0.0200		
2-4	68.3357	242.8264	-7.6667	0.6933	788.0954	746.5797	0.0000	0.0200		
2-4	69.3357	243.8264	-7.6667	0.7033	788.2530	746.4221	0.0000	0.0200		
2-4	70.3357	244.8263	-7.6667	0.7133	788.4107	746.2644	0.0000	0.0200		
2-4	71.3357	245.8263	-7.6667	0.7233	788.5684	746.1067	0.0000	0.0200		
2-4	72.3357	246.8262	-7.6667	0.7333	788.7261	745.9490	0.0000	0.0200		
2-4	73.3357	247.8262	-7.6667	0.7433	788.8839	745.7912	0.0000	0.0200		
2-4	74.3357	248.8261	-7.6667	0.7533	789.0417	745.6335	0.0000	0.0200		

TENDON Back Deck D9-R, Calculations

Segment	Length (ft)	X (ft)	Y (ft)	Z (ft)	Force (kips)	Force after Anchor-Set (kips)	Angle Change (deg)	Force Loss (%)	Containing Element	Additional Info.
2-4	75.3357	249.8261	-7.6667	0.7633	789.1995	745.4756	0.0000	0.0200		
2-4	76.3357	250.8260	-7.6667	0.7733	789.3573	745.3178	0.0000	0.0200		
2-4	77.3357	251.8260	-7.6667	0.7833	789.5152	745.1599	0.0000	0.0200		
2-4	78.3357	252.8259	-7.6667	0.7933	789.6732	745.0020	0.0000	0.0200		
2-4	79.3357	253.8259	-7.6667	0.8033	789.8311	744.8440	0.0000	0.0200		
2-4	80.3357	254.8258	-7.6667	0.8133	789.9891	744.6860	0.0000	0.0200		
2-4	81.3357	255.8258	-7.6667	0.8233	790.1471	744.5280	0.0000	0.0200		
2-4	82.3357	256.8257	-7.6667	0.8333	790.3051	744.3700	0.0000	0.0200		
2-4	83.3357	257.8257	-7.6667	0.8433	790.4632	744.2119	0.0000	0.0200		
2-4	84.3357	258.8256	-7.6667	0.8533	790.6213	744.0538	0.0000	0.0200		
2-4	85.3357	259.8256	-7.6667	0.8633	790.7795	743.8956	0.0000	0.0200		
2-4	86.3357	260.8255	-7.6667	0.8733	790.9376	743.7375	0.0000	0.0200		
2-4	87.3357	261.8255	-7.6667	0.8833	791.0958	743.5793	0.0000	0.0200		
2-4	88.3357	262.8254	-7.6667	0.8933	791.2541	743.4210	0.0000	0.0200		
2-4	89.3357	263.8254	-7.6667	0.9033	791.4123	743.2628	0.0000	0.0200		
2-4	90.3357	264.8253	-7.6667	0.9133	791.5706	743.1045	0.0000	0.0200		
2-4	91.3357	265.8253	-7.6667	0.9233	791.7290	742.9461	0.0000	0.0200		
2-4	92.3357	266.8252	-7.6667	0.9333	791.8873	742.7878	0.0000	0.0200		
2-4	93.3357	267.8252	-7.6667	0.9433	792.0457	742.6294	0.0000	0.0200		
2-4	94.3357	268.8251	-7.6667	0.9533	792.2042	742.4710	0.0000	0.0077		
4	94.7194	269.2088	-7.6667	0.9571	792.2649	742.4102	2.4993	1.1019		
4	95.5915	270.0804	-7.6667	0.9278	801.0919	733.5833	4.9986	2.1745		
4	96.4637	270.9462	-7.6667	0.8226	818.8990	715.7761	2.4993	1.0991		
6	97.1986	271.6713	-7.6667	0.7023	827.9999	706.6752	0.0000	0.0147		
6	97.9336	272.3963	-7.6667	0.5819	828.1216	706.5535	0.0000	0.0147		
6	98.6686	273.1214	-7.6667	0.4616	828.2434	706.4317	0.0000	0.0044		
6	98.8892	273.3390	-7.6667	0.4254	828.2799	706.3952	0.0000	0.0000		

TENDON Back Canopy C5-L, Calculations

Segment	Length (ft)	X (ft)	Y (ft)	Z (ft)	Force (kips)	Force after Anchor-Set (kips)	Angle Change (deg)	Force Loss (%)
1	0.0000	174.4975	3.6250	16.0829	455.1427	455.1427	0.0000	0.0200
1-2	1.0000	175.4923	3.6250	15.9819	455.2337	455.2337	0.0000	0.0158

TENDON Back Canopy C5-L, Calculations

Segment	Length (ft)	X (ft)	Y (ft)	Z (ft)	Force (kips)	Force after Anchor-Set (kips)	Angle Change (deg)	Force Loss (%)	Containing Element	Additional Info.
2	1.7917	176.2800	3.6250	15.9020	455.3058	455.3058	1.5919	0.7032		
2	2.3473	176.8341	3.6250	15.8613	458.5303	458.5303	3.1838	1.3906		
2	2.9029	177.3896	3.6250	15.8514	464.9963	464.9963	1.5919	0.7119		
4	3.8954	178.3820	3.6250	15.8613	468.3304	461.8461	0.0000	0.0198		
4	4.8878	179.3744	3.6250	15.8712	468.4234	461.7531	0.0000	0.0198		
4	5.8802	180.3668	3.6250	15.8811	468.5164	461.6601	0.0000	0.0198		
4	6.8727	181.3592	3.6250	15.8911	468.6094	461.5671	0.0000	0.0198		
4	7.8651	182.3516	3.6250	15.9010	468.7024	461.4741	0.0000	0.0198		
4	8.8576	183.3440	3.6250	15.9109	468.7954	461.3811	0.0000	0.0198		
4	9.8500	184.3364	3.6250	15.9208	468.8885	461.2880	0.0000	0.0198		
4	10.8424	185.3288	3.6250	15.9307	468.9816	461.1949	0.0000	0.0198		
4	11.8349	186.3211	3.6250	15.9407	469.0747	461.1018	0.0000	0.0198		
4	12.8273	187.3135	3.6250	15.9506	469.1678	461.0087	0.0000	0.0198		
4	13.8197	188.3059	3.6250	15.9605	469.2609	460.9156	0.0000	0.0198		
4	14.8122	189.2983	3.6250	15.9704	469.3541	460.8224	0.0000	0.0198		
4	15.8046	190.2907	3.6250	15.9803	469.4472	460.7293	0.0000	0.0198		
4	16.7971	191.2831	3.6250	15.9903	469.5404	460.6361	0.0000	0.0198		
4	17.7895	192.2755	3.6250	16.0002	469.6336	460.5429	0.0000	0.0198		
4	18.7819	193.2679	3.6250	16.0101	469.7268	460.4497	0.0000	0.0198		
4	19.7744	194.2602	3.6250	16.0200	469.8201	460.3564	0.0000	0.0198		
4	20.7668	195.2526	3.6250	16.0299	469.9134	460.2631	0.0000	0.0198		
4	21.7592	196.2450	3.6250	16.0399	470.0066	460.1699	0.0000	0.0198		
4	22.7517	197.2374	3.6250	16.0498	470.0999	460.0766	0.0000	0.0198		
4	23.7441	198.2298	3.6250	16.0597	470.1933	459.9832	0.0000	0.0198		
4	24.7366	199.2222	3.6250	16.0696	470.2866	459.8899	0.0000	0.0198		
4	25.7290	200.2146	3.6250	16.0795	470.3799	459.7966	0.0000	0.0198		
4	26.7214	201.2070	3.6250	16.0895	470.4733	459.7032	0.0000	0.0198		
4	27.7139	202.1993	3.6250	16.0994	470.5667	459.6098	0.0000	0.0198		
4	28.7063	203.1917	3.6250	16.1093	470.6601	459.5164	0.0000	0.0198		
4	29.6988	204.1841	3.6250	16.1192	470.7536	459.4229	0.0000	0.0198		
4	30.6912	205.1765	3.6250	16.1291	470.8470	459.3295	0.0000	0.0198		
4	31.6836	206.1689	3.6250	16.1391	470.9405	459.2360	0.0000	0.0198		
4	32.6761	207.1613	3.6250	16.1490	471.0340	459.1425	0.0000	0.0198		
4	33.6685	208.1537	3.6250	16.1589	471.1275	459.0490	0.0000	0.0198		

TENDON Back Canopy C5-L, Calculations

Segment	Length (ft)	X (ft)	Y (ft)	Z (ft)	Force (kips)	Force after Anchor-Set (kips)	Angle Change (deg)	Force Loss (%)	Containing Element	Additional Info.
4	34.6609	209.1461	3.6250	16.1688	471.2210	458.9555	0.0000	0.0198		
4	35.6534	210.1385	3.6250	16.1787	471.3145	458.8620	0.0000	0.0198		
4	36.6458	211.1308	3.6250	16.1887	471.4081	458.7684	0.0000	0.0198		
4	37.6383	212.1232	3.6250	16.1986	471.5017	458.6748	0.0000	0.0198		
4	38.6307	213.1156	3.6250	16.2085	471.5953	458.5812	0.0000	0.0198		
4	39.6231	214.1080	3.6250	16.2184	471.6889	458.4876	0.0000	0.0198		
4	40.6156	215.1004	3.6250	16.2283	471.7825	458.3940	0.0000	0.0198		
4	41.6080	216.0928	3.6250	16.2382	471.8762	458.3003	0.0000	0.0198		
4	42.6004	217.0852	3.6250	16.2482	471.9698	458.2067	0.0000	0.0198		
4	43.5929	218.0776	3.6250	16.2581	472.0635	458.1130	0.0000	0.0198		
4	44.5853	219.0699	3.6250	16.2680	472.1572	458.0193	0.0000	0.0198		
4	45.5778	220.0623	3.6250	16.2779	472.2509	457.9256	0.0000	0.0198		
4	46.5702	221.0547	3.6250	16.2878	472.3447	457.8318	0.0000	0.0198		
4	47.5626	222.0471	3.6250	16.2978	472.4385	457.7380	0.0000	0.0198		
4	48.5551	223.0395	3.6250	16.3077	472.5322	457.6443	0.0000	0.0198		
4	49.5475	224.0319	3.6250	16.3176	472.6260	457.5505	0.0000	0.0198		
4	50.5399	225.0243	3.6250	16.3275	472.7199	457.4566	0.0000	0.0198		
4	51.5324	226.0167	3.6250	16.3374	472.8137	457.3628	0.0000	0.0198		
4	52.5248	227.0091	3.6250	16.3474	472.9076	457.2689	0.0000	0.0198		
4	53.5173	228.0014	3.6250	16.3573	473.0014	457.1751	0.0000	0.0198		
4	54.5097	228.9938	3.6250	16.3672	473.0953	457.0812	0.0000	0.0198		
4	55.5021	229.9862	3.6250	16.3771	473.1892	456.9873	0.0000	0.0198		
4	56.4946	230.9786	3.6250	16.3870	473.2832	456.8933	0.0000	0.0198		
4	57.4870	231.9710	3.6250	16.3970	473.3771	456.7994	0.0000	0.0198		
4	58.4794	232.9634	3.6250	16.4069	473.4711	456.7054	0.0000	0.0198		
4	59.4719	233.9558	3.6250	16.4168	473.5651	456.6114	0.0000	0.0198		
4	60.4643	234.9482	3.6250	16.4267	473.6591	456.5174	0.0000	0.0198		
4	61.4568	235.9405	3.6250	16.4366	473.7531	456.4234	0.0000	0.0198		
4	62.4492	236.9329	3.6250	16.4466	473.8472	456.3293	0.0000	0.0198		
4	63.4416	237.9253	3.6250	16.4565	473.9412	456.2353	0.0000	0.0198		
4	64.4341	238.9177	3.6250	16.4664	474.0353	456.1412	0.0000	0.0198		
4	65.4265	239.9101	3.6250	16.4763	474.1294	456.0471	0.0000	0.0198		
4	66.4189	240.9025	3.6250	16.4862	474.2235	455.9530	0.0000	0.0198		
4	67.4114	241.8949	3.6250	16.4962	474.3176	455.8589	0.0000	0.0198		

TENDON Back Canopy C5-L, Calculations

Segment	Length (ft)	X (ft)	Y (ft)	Z (ft)	Force (kips)	Force after Anchor-Set (kips)	Angle Change (deg)	Force Loss (%)	Containing Element	Additional Info.
4	68.4038	242.8873	3.6250	16.5061	474.4118	455.7647	0.0000	0.0198		
4	69.3963	243.8796	3.6250	16.5160	474.5060	455.6705	0.0000	0.0198		
4	70.3887	244.8720	3.6250	16.5259	474.6002	455.5763	0.0000	0.0198		
4	71.3811	245.8644	3.6250	16.5358	474.6944	455.4821	0.0000	0.0198		
4	72.3736	246.8568	3.6250	16.5458	474.7886	455.3879	0.0000	0.0198		
4	73.3660	247.8492	3.6250	16.5557	474.8829	455.2936	0.0000	0.0198		
4	74.3584	248.8416	3.6250	16.5656	474.9771	455.1994	0.0000	0.0198		
4	75.3509	249.8340	3.6250	16.5755	475.0714	455.1051	0.0000	0.0110		
4	75.9025	250.3856	3.6250	16.5810	475.1238	455.0527	6.2594	2.7137		
6	76.9025	251.3795	3.5164	16.6004	488.3768	441.7997	0.0000	0.0200		
6	77.9025	252.3734	3.4078	16.6197	488.4744	441.7021	0.0000	0.0200		
6	78.9025	253.3673	3.2991	16.6390	488.5721	441.6044	0.0000	0.0200		
6	79.9025	254.3612	3.1905	16.6584	488.6699	441.5066	0.0000	0.0200		
6	80.9025	255.3551	3.0819	16.6777	488.7676	441.4089	0.0000	0.0200		
6	81.9025	256.3490	2.9733	16.6970	488.8654	441.3111	0.0000	0.0200		
6	82.9025	257.3429	2.8646	16.7164	488.9632	441.2133	0.0000	0.0200		
6	83.9025	258.3368	2.7560	16.7357	489.0610	441.1155	0.0000	0.0200		
6	84.9025	259.3307	2.6474	16.7550	489.1588	441.0177	0.0000	0.0200		
6	85.9025	260.3245	2.5388	16.7744	489.2566	440.9199	0.0000	0.0200		
6	86.9025	261.3184	2.4301	16.7937	489.3545	440.8220	0.0000	0.0025		
6	87.0266	261.4417	2.4167	16.7961	489.3666	440.8099	6.2594	2.7137		
6-7	88.0266	262.4417	2.4167	16.8061	503.0168	427.1597	0.0000	0.0200		
6-7	89.0266	263.4416	2.4167	16.8161	503.1174	427.0591	0.0000	0.0200		
6-7	90.0266	264.4416	2.4167	16.8261	503.2181	426.9584	0.0000	0.0200		
6-7	91.0266	265.4415	2.4167	16.8361	503.3187	426.8578	0.0000	0.0200		
6-7	92.0266	266.4415	2.4167	16.8461	503.4194	426.7571	0.0000	0.0200		
6-7	93.0266	267.4414	2.4167	16.8561	503.5201	426.6564	0.0000	0.0200		
6-7	94.0266	268.4414	2.4167	16.8661	503.6208	426.5557	0.0000	0.0038		
7	94.2168	268.6316	2.4167	16.8680	503.6400	426.5365	1.6552	0.7368		
7	95.0833	269.4974	2.4167	16.9017	507.3784	422.7981	3.3104	1.4511		
7	95.9498	270.3599	2.4167	16.9853	514.8495	415.3270	1.6552	0.7321		
8	96.5805	270.9856	2.4167	17.0643	518.6467	411.5298	0.0000	0.0126		
8	97.2111	271.6113	2.4167	17.1432	518.7121	411.4644	0.0000	0.0044		
8	97.4313	271.8297	2.4167	17.1708	518.7349	411.4416	0.0000	0.0000		

TENDON Back Canopy C5-R, Calculations

Segment	Length (ft)	X (ft)	Y (ft)	Z (ft)	Force (kips)	Force after Anchor-Set (kips)	Angle Change (deg)	Force Loss (%)
1	0.0000	174.4975	-3.6250	16.0829	455.1427	455.1427	0.0000	0.0200
1-2	1.0000	175.4923	-3.6250	15.9819	455.2337	455.2337	0.0000	0.0158
2	1.7917	176.2800	-3.6250	15.9020	455.3058	455.3058	1.5919	0.7032
2	2.3473	176.8341	-3.6250	15.8613	458.5303	458.5303	3.1838	1.3906
2	2.9029	177.3896	-3.6250	15.8514	464.9963	464.9963	1.5919	0.7119
4	3.8954	178.3820	-3.6250	15.8613	468.3304	461.8461	0.0000	0.0198
4	4.8878	179.3744	-3.6250	15.8712	468.4234	461.7531	0.0000	0.0198
4	5.8802	180.3668	-3.6250	15.8811	468.5164	461.6601	0.0000	0.0198
4	6.8727	181.3592	-3.6250	15.8911	468.6094	461.5671	0.0000	0.0198
4	7.8651	182.3516	-3.6250	15.9010	468.7024	461.4741	0.0000	0.0198
4	8.8576	183.3440	-3.6250	15.9109	468.7954	461.3811	0.0000	0.0198
4	9.8500	184.3364	-3.6250	15.9208	468.8885	461.2880	0.0000	0.0198
4	10.8424	185.3288	-3.6250	15.9307	468.9816	461.1949	0.0000	0.0198
4	11.8349	186.3211	-3.6250	15.9407	469.0747	461.1018	0.0000	0.0198
4	12.8273	187.3135	-3.6250	15.9506	469.1678	461.0087	0.0000	0.0198
4	13.8197	188.3059	-3.6250	15.9605	469.2609	460.9156	0.0000	0.0198
4	14.8122	189.2983	-3.6250	15.9704	469.3541	460.8224	0.0000	0.0198
4	15.8046	190.2907	-3.6250	15.9803	469.4472	460.7293	0.0000	0.0198
4	16.7971	191.2831	-3.6250	15.9903	469.5404	460.6361	0.0000	0.0198
4	17.7895	192.2755	-3.6250	16.0002	469.6336	460.5429	0.0000	0.0198
4	18.7819	193.2679	-3.6250	16.0101	469.7268	460.4497	0.0000	0.0198
4	19.7744	194.2602	-3.6250	16.0200	469.8201	460.3564	0.0000	0.0198
4	20.7668	195.2526	-3.6250	16.0299	469.9134	460.2631	0.0000	0.0198
4	21.7592	196.2450	-3.6250	16.0399	470.0066	460.1699	0.0000	0.0198
4	22.7517	197.2374	-3.6250	16.0498	470.0999	460.0766	0.0000	0.0198
4	23.7441	198.2298	-3.6250	16.0597	470.1933	459.9832	0.0000	0.0198
4	24.7366	199.2222	-3.6250	16.0696	470.2866	459.8899	0.0000	0.0198
4	25.7290	200.2146	-3.6250	16.0795	470.3799	459.7966	0.0000	0.0198
4	26.7214	201.2070	-3.6250	16.0895	470.4733	459.7032	0.0000	0.0198
4	27.7139	202.1993	-3.6250	16.0994	470.5667	459.6098	0.0000	0.0198
4	28.7063	203.1917	-3.6250	16.1093	470.6601	459.5164	0.0000	0.0198
4	29.6988	204.1841	-3.6250	16.1192	470.7536	459.4229	0.0000	0.0198

TENDON Back Canopy C5-R, Calculations

Segment	Length (ft)	X (ft)	Y (ft)	Z (ft)	Force (kips)	Force after Anchor-Set (kips)	Angle Change (deg)	Force Loss (%)	Containing Element	Additional Info.
4	30.6912	205.1765	-3.6250	16.1291	470.8470	459.3295	0.0000	0.0198		
4	31.6836	206.1689	-3.6250	16.1391	470.9405	459.2360	0.0000	0.0198		
4	32.6761	207.1613	-3.6250	16.1490	471.0340	459.1425	0.0000	0.0198		
4	33.6685	208.1537	-3.6250	16.1589	471.1275	459.0490	0.0000	0.0198		
4	34.6609	209.1461	-3.6250	16.1688	471.2210	458.9555	0.0000	0.0198		
4	35.6534	210.1385	-3.6250	16.1787	471.3145	458.8620	0.0000	0.0198		
4	36.6458	211.1308	-3.6250	16.1887	471.4081	458.7684	0.0000	0.0198		
4	37.6383	212.1232	-3.6250	16.1986	471.5017	458.6748	0.0000	0.0198		
4	38.6307	213.1156	-3.6250	16.2085	471.5953	458.5812	0.0000	0.0198		
4	39.6231	214.1080	-3.6250	16.2184	471.6889	458.4876	0.0000	0.0198		
4	40.6156	215.1004	-3.6250	16.2283	471.7825	458.3940	0.0000	0.0198		
4	41.6080	216.0928	-3.6250	16.2382	471.8762	458.3003	0.0000	0.0198		
4	42.6004	217.0852	-3.6250	16.2482	471.9698	458.2067	0.0000	0.0198		
4	43.5929	218.0776	-3.6250	16.2581	472.0635	458.1130	0.0000	0.0198		
4	44.5853	219.0699	-3.6250	16.2680	472.1572	458.0193	0.0000	0.0198		
4	45.5778	220.0623	-3.6250	16.2779	472.2509	457.9256	0.0000	0.0198		
4	46.5702	221.0547	-3.6250	16.2878	472.3447	457.8318	0.0000	0.0198		
4	47.5626	222.0471	-3.6250	16.2978	472.4385	457.7380	0.0000	0.0198		
4	48.5551	223.0395	-3.6250	16.3077	472.5322	457.6443	0.0000	0.0198		
4	49.5475	224.0319	-3.6250	16.3176	472.6260	457.5505	0.0000	0.0198		
4	50.5399	225.0243	-3.6250	16.3275	472.7199	457.4566	0.0000	0.0198		
4	51.5324	226.0167	-3.6250	16.3374	472.8137	457.3628	0.0000	0.0198		
4	52.5248	227.0091	-3.6250	16.3474	472.9076	457.2689	0.0000	0.0198		
4	53.5173	228.0014	-3.6250	16.3573	473.0014	457.1751	0.0000	0.0198		
4	54.5097	228.9938	-3.6250	16.3672	473.0953	457.0812	0.0000	0.0198		
4	55.5021	229.9862	-3.6250	16.3771	473.1892	456.9873	0.0000	0.0198		
4	56.4946	230.9786	-3.6250	16.3870	473.2832	456.8933	0.0000	0.0198		
4	57.4870	231.9710	-3.6250	16.3970	473.3771	456.7994	0.0000	0.0198		
4	58.4794	232.9634	-3.6250	16.4069	473.4711	456.7054	0.0000	0.0198		
4	59.4719	233.9558	-3.6250	16.4168	473.5651	456.6114	0.0000	0.0198		
4	60.4643	234.9482	-3.6250	16.4267	473.6591	456.5174	0.0000	0.0198		
4	61.4568	235.9405	-3.6250	16.4366	473.7531	456.4234	0.0000	0.0198		
4	62.4492	236.9329	-3.6250	16.4466	473.8472	456.3293	0.0000	0.0198		
4	63.4416	237.9253	-3.6250	16.4565	473.9412	456.2353	0.0000	0.0198		

TENDON Back Canopy C5-R, Calculations

Segment	Length (ft)	X (ft)	Y (ft)	Z (ft)	Force (kips)	Force after Anchor-Set (kips)	Angle Change (deg)	Force Loss (%)	Containing Element	Additional Info.
4	64.4341	238.9177	-3.6250	16.4664	474.0353	456.1412	0.0000	0.0198		
4	65.4265	239.9101	-3.6250	16.4763	474.1294	456.0471	0.0000	0.0198		
4	66.4189	240.9025	-3.6250	16.4862	474.2235	455.9530	0.0000	0.0198		
4	67.4114	241.8949	-3.6250	16.4962	474.3176	455.8589	0.0000	0.0198		
4	68.4038	242.8873	-3.6250	16.5061	474.4118	455.7647	0.0000	0.0198		
4	69.3963	243.8796	-3.6250	16.5160	474.5060	455.6705	0.0000	0.0198		
4	70.3887	244.8720	-3.6250	16.5259	474.6002	455.5763	0.0000	0.0198		
4	71.3811	245.8644	-3.6250	16.5358	474.6944	455.4821	0.0000	0.0198		
4	72.3736	246.8568	-3.6250	16.5458	474.7886	455.3879	0.0000	0.0198		
4	73.3660	247.8492	-3.6250	16.5557	474.8829	455.2936	0.0000	0.0198		
4	74.3584	248.8416	-3.6250	16.5656	474.9771	455.1994	0.0000	0.0198		
4	75.3509	249.8340	-3.6250	16.5755	475.0714	455.1051	0.0000	0.0110		
4	75.9025	250.3856	-3.6250	16.5810	475.1238	455.0527	6.2594	2.7137		
6	76.9025	251.3795	-3.5164	16.6004	488.3768	441.7997	0.0000	0.0200		
6	77.9025	252.3734	-3.4078	16.6197	488.4744	441.7021	0.0000	0.0200		
6	78.9025	253.3673	-3.2991	16.6390	488.5721	441.6044	0.0000	0.0200		
6	79.9025	254.3612	-3.1905	16.6584	488.6699	441.5066	0.0000	0.0200		
6	80.9025	255.3551	-3.0819	16.6777	488.7676	441.4089	0.0000	0.0200		
6	81.9025	256.3490	-2.9733	16.6970	488.8654	441.3111	0.0000	0.0200		
6	82.9025	257.3429	-2.8646	16.7164	488.9632	441.2133	0.0000	0.0200		
6	83.9025	258.3368	-2.7560	16.7357	489.0610	441.1155	0.0000	0.0200		
6	84.9025	259.3307	-2.6474	16.7550	489.1588	441.0177	0.0000	0.0200		
6	85.9025	260.3245	-2.5388	16.7744	489.2566	440.9199	0.0000	0.0200		
6	86.9025	261.3184	-2.4301	16.7937	489.3545	440.8220	0.0000	0.0025		
6	87.0266	261.4417	-2.4167	16.7961	489.3666	440.8099	6.2594	2.7137		
6-7	88.0266	262.4417	-2.4167	16.8061	503.0168	427.1597	0.0000	0.0200		
6-7	89.0266	263.4416	-2.4167	16.8161	503.1174	427.0591	0.0000	0.0200		
6-7	90.0266	264.4416	-2.4167	16.8261	503.2181	426.9584	0.0000	0.0200		
6-7	91.0266	265.4415	-2.4167	16.8361	503.3187	426.8578	0.0000	0.0200		
6-7	92.0266	266.4415	-2.4167	16.8461	503.4194	426.7571	0.0000	0.0200		
6-7	93.0266	267.4414	-2.4167	16.8561	503.5201	426.6564	0.0000	0.0200		
6-7	94.0266	268.4414	-2.4167	16.8661	503.6208	426.5557	0.0000	0.0038		
7	94.2168	268.6316	-2.4167	16.8680	503.6400	426.5365	1.6552	0.7368		
7	95.0833	269.4974	-2.4167	16.9017	507.3784	422.7981	3.3104	1.4511		

TENDON Back Canopy C5-R, Calculations

Segment	Length (ft)	X (ft)	Y (ft)	Z (ft)	Force (kips)	Force after Anchor-Set (kips)	Angle Change (deg)	Force Loss (%)	Containing Element	Additional Info.
7	95.9498	270.3599	-2.4167	16.9853	514.8495	415.3270	1.6552	0.7321		
8	96.5805	270.9856	-2.4167	17.0643	518.6467	411.5298	0.0000	0.0126		
8	97.2111	271.6113	-2.4167	17.1432	518.7121	411.4644	0.0000	0.0044		
8	97.4313	271.8297	-2.4167	17.1708	518.7349	411.4416	0.0000	0.0000		

TENDON Full Length - Canopy C4-L, Calculations

Segment	Length (ft)	X (ft)	Y (ft)	Z (ft)	Force (kips)	Force after Anchor-Set (kips)	Angle Change (deg)	Force Loss (%)
1	0.0000	-0.8386	4.9167	14.6004	460.4274	460.4274	0.0000	0.0200
1-2	1.0000	0.1559	4.9167	14.4950	460.5195	460.5195	0.0000	0.0096
2	1.4815	0.6347	4.9167	14.4443	460.5638	460.5638	1.6551	0.7368
2	2.3480	1.4986	4.9167	14.3779	463.9824	463.9824	3.3103	1.4511
2	3.2145	2.3650	4.9167	14.3616	470.8143	470.8143	1.6551	0.7373
3	4.1060	3.2565	4.9167	14.3705	474.3114	474.3114	0.0000	0.0178
3	4.9976	4.1480	4.9167	14.3794	474.3959	474.3959	0.0000	0.0178
3	5.8892	5.0395	4.9167	14.3883	474.4805	474.4805	0.0000	0.0178
3	6.7807	5.9310	4.9167	14.3972	474.5652	474.5652	0.0000	0.0178
3	7.6723	6.8225	4.9167	14.4061	474.6498	474.6498	0.0000	0.0178
3	8.5638	7.7140	4.9167	14.4151	474.7344	474.7344	0.0000	0.0178
3	9.4554	8.6055	4.9167	14.4240	474.8191	474.8191	0.0000	0.0178
3	10.3469	9.4970	4.9167	14.4329	474.9038	474.9038	0.0000	0.0000
3	10.3470	9.4972	4.9167	14.4329	474.9038	474.9038	4.3064	1.8811
4	11.3470	10.4944	4.9907	14.4305	484.0085	484.0085	0.0000	0.0200
4	12.3470	11.4917	5.0648	14.4282	484.1053	484.1053	0.0000	0.0200
4	13.3470	12.4889	5.1389	14.4258	484.2021	484.2021	0.0000	0.0200
4	14.3470	13.4862	5.2130	14.4235	484.2990	484.2990	0.0000	0.0200
4	15.3470	14.4834	5.2870	14.4212	484.3958	484.3958	0.0000	0.0200
4	16.3470	15.4807	5.3611	14.4188	484.4927	484.4927	0.0000	0.0200
4	17.3470	16.4779	5.4352	14.4165	484.5896	484.5896	0.0000	0.0200
4	18.3470	17.4752	5.5093	14.4141	484.6866	484.6866	0.0000	0.0200
4	19.3470	18.4724	5.5833	14.4118	484.7835	484.7835	0.0000	0.0200
4	20.3470	19.4697	5.6574	14.4094	484.8805	484.8805	0.0000	0.0025
4	20.4722	19.5945	5.6667	14.4091	484.8926	484.8926	4.3064	1.8811

TENDON Full Length - Canopy C4-L, Calculations

Segment	Length (ft)	X (ft)	Y (ft)	Z (ft)	Force (kips)	Force after Anchor-Set (kips)	Angle Change (deg)	Force Loss (%)	Containing Element	Additional Info.
6	21.4722	20.5944	5.6667	14.4191	494.1887	494.1887	0.0000	0.0200		
6	22.4722	21.5944	5.6667	14.4291	494.2876	494.2876	0.0000	0.0200		
6	23.4722	22.5943	5.6667	14.4391	494.3865	494.3865	0.0000	0.0200		
6	24.4722	23.5943	5.6667	14.4491	494.4853	494.4853	0.0000	0.0200		
6	25.4722	24.5942	5.6667	14.4591	494.5842	494.5842	0.0000	0.0200		
6	26.4722	25.5942	5.6667	14.4691	494.6832	494.6832	0.0000	0.0200		
6	27.4722	26.5941	5.6667	14.4791	494.7821	494.7821	0.0000	0.0200		
6	28.4722	27.5941	5.6667	14.4891	494.8811	494.8811	0.0000	0.0200		
6	29.4722	28.5940	5.6667	14.4991	494.9801	494.9801	0.0000	0.0200		
6	30.4722	29.5940	5.6667	14.5091	495.0791	495.0791	0.0000	0.0200		
6	31.4722	30.5939	5.6667	14.5191	495.1781	495.1781	0.0000	0.0200		
6	32.4722	31.5939	5.6667	14.5291	495.2772	495.2772	0.0000	0.0200		
6	33.4722	32.5938	5.6667	14.5391	495.3762	495.3762	0.0000	0.0200		
6	34.4722	33.5938	5.6667	14.5491	495.4753	495.4753	0.0000	0.0200		
6	35.4722	34.5937	5.6667	14.5591	495.5744	495.5744	0.0000	0.0200		
6	36.4722	35.5937	5.6667	14.5690	495.6735	495.6735	0.0000	0.0200		
6	37.4722	36.5936	5.6667	14.5790	495.7727	495.7727	0.0000	0.0200		
6	38.4722	37.5936	5.6667	14.5890	495.8718	495.8718	0.0000	0.0200		
6	39.4722	38.5935	5.6667	14.5990	495.9710	495.9710	0.0000	0.0200		
6	40.4722	39.5935	5.6667	14.6090	496.0702	496.0702	0.0000	0.0200		
6	41.4722	40.5934	5.6667	14.6190	496.1695	496.1695	0.0000	0.0200		
6	42.4722	41.5934	5.6667	14.6290	496.2687	496.2687	0.0000	0.0200		
6	43.4722	42.5933	5.6667	14.6390	496.3680	496.3680	0.0000	0.0200		
6	44.4722	43.5933	5.6667	14.6490	496.4672	496.4672	0.0000	0.0200		
6	45.4722	44.5932	5.6667	14.6590	496.5665	496.5665	0.0000	0.0200		
6	46.4722	45.5932	5.6667	14.6690	496.6659	496.6659	0.0000	0.0200		
6	47.4722	46.5931	5.6667	14.6790	496.7652	496.7652	0.0000	0.0200		
6	48.4722	47.5931	5.6667	14.6890	496.8646	496.8646	0.0000	0.0200		
6	49.4722	48.5930	5.6667	14.6990	496.9640	496.9640	0.0000	0.0200		
6	50.4722	49.5930	5.6667	14.7090	497.0634	497.0634	0.0000	0.0200		
6	51.4722	50.5929	5.6667	14.7190	497.1628	497.1628	0.0000	0.0200		
6	52.4722	51.5929	5.6667	14.7290	497.2622	497.2622	0.0000	0.0200		
6	53.4722	52.5928	5.6667	14.7390	497.3617	497.3617	0.0000	0.0200		
6	54.4722	53.5928	5.6667	14.7490	497.4612	497.4612	0.0000	0.0200		

TENDON Full Length - Canopy C4-L, Calculations

Segment	Length (ft)	X (ft)	Y (ft)	Z (ft)	Force (kips)	Force after Anchor-Set (kips)	Angle Change (deg)	Force Loss (%)	Containing Element	Additional Info.
6	55.4722	54.5927	5.6667	14.7590	497.5607	497.5607	0.0000	0.0200		
6	56.4722	55.5927	5.6667	14.7689	497.6602	497.6602	0.0000	0.0200		
6	57.4722	56.5926	5.6667	14.7789	497.7597	497.7597	0.0000	0.0200		
6	58.4722	57.5926	5.6667	14.7889	497.8593	497.8593	0.0000	0.0200		
6	59.4722	58.5925	5.6667	14.7989	497.9589	497.9589	0.0000	0.0200		
6	60.4722	59.5925	5.6667	14.8089	498.0585	498.0585	0.0000	0.0200		
6	61.4722	60.5924	5.6667	14.8189	498.1581	498.1581	0.0000	0.0200		
6	62.4722	61.5924	5.6667	14.8289	498.2577	498.2577	0.0000	0.0200		
6	63.4722	62.5923	5.6667	14.8389	498.3574	498.3574	0.0000	0.0200		
6	64.4722	63.5923	5.6667	14.8489	498.4571	498.4571	0.0000	0.0200		
6	65.4722	64.5922	5.6667	14.8589	498.5568	498.5568	0.0000	0.0200		
6	66.4722	65.5922	5.6667	14.8689	498.6565	498.6565	0.0000	0.0200		
6	67.4722	66.5921	5.6667	14.8789	498.7563	498.7563	0.0000	0.0200		
6	68.4722	67.5921	5.6667	14.8889	498.8560	498.8560	0.0000	0.0200		
6	69.4722	68.5920	5.6667	14.8989	498.9558	498.9558	0.0000	0.0200		
6	70.4722	69.5920	5.6667	14.9089	499.0556	499.0556	0.0000	0.0200		
6	71.4722	70.5919	5.6667	14.9189	499.1554	499.1554	0.0000	0.0200		
6	72.4722	71.5919	5.6667	14.9289	499.2553	499.2553	0.0000	0.0200		
6	73.4722	72.5918	5.6667	14.9389	499.3551	499.3551	0.0000	0.0200		
6	74.4722	73.5918	5.6667	14.9489	499.4550	499.4550	0.0000	0.0200		
6	75.4722	74.5917	5.6667	14.9589	499.5549	499.5549	0.0000	0.0200		
6	76.4722	75.5917	5.6667	14.9688	499.6548	499.6548	0.0000	0.0200		
6	77.4722	76.5916	5.6667	14.9788	499.7548	499.7548	0.0000	0.0200		
6	78.4722	77.5916	5.6667	14.9888	499.8547	499.8547	0.0000	0.0200		
6	79.4722	78.5915	5.6667	14.9988	499.9547	499.9547	0.0000	0.0200		
6	80.4722	79.5915	5.6667	15.0088	500.0547	500.0547	0.0000	0.0200		
6	81.4722	80.5914	5.6667	15.0188	500.1547	500.1547	0.0000	0.0200		
6	82.4722	81.5914	5.6667	15.0288	500.2548	500.2548	0.0000	0.0200		
6	83.4722	82.5913	5.6667	15.0388	500.3548	500.3548	0.0000	0.0200		
6	84.4722	83.5913	5.6667	15.0488	500.4549	500.4549	0.0000	0.0200		
6	85.4722	84.5912	5.6667	15.0588	500.5550	500.5550	0.0000	0.0200		
6	86.4722	85.5912	5.6667	15.0688	500.6551	500.6551	0.0000	0.0200		
6	87.4722	86.5911	5.6667	15.0788	500.7553	500.7553	0.0000	0.0200		
6	88.4722	87.5911	5.6667	15.0888	500.8554	500.8554	0.0000	0.0200		

TENDON Full Length - Canopy C4-L, Calculations

Segment	Length (ft)	X (ft)	Y (ft)	Z (ft)	Force (kips)	Force after Anchor-Set (kips)	Angle Change (deg)	Force Loss (%)	Containing Element	Additional Info.
6	89.4722	88.5910	5.6667	15.0988	500.9556	500.9556	0.0000	0.0200		
6	90.4722	89.5910	5.6667	15.1088	501.0558	501.0558	0.0000	0.0200		
6	91.4722	90.5909	5.6667	15.1188	501.1560	501.1560	0.0000	0.0200		
6	92.4722	91.5909	5.6667	15.1288	501.2563	501.2563	0.0000	0.0200		
6	93.4722	92.5908	5.6667	15.1388	501.3565	501.3565	0.0000	0.0200		
6	94.4722	93.5908	5.6667	15.1488	501.4568	501.4568	0.0000	0.0200		
6	95.4722	94.5907	5.6667	15.1587	501.5571	501.5571	0.0000	0.0200		
6	96.4722	95.5907	5.6667	15.1687	501.6574	501.6574	0.0000	0.0200		
6	97.4722	96.5906	5.6667	15.1787	501.7578	501.7578	0.0000	0.0200		
6	98.4722	97.5906	5.6667	15.1887	501.8581	501.8581	0.0000	0.0200		
6	99.4722	98.5905	5.6667	15.1987	501.9585	501.9585	0.0000	0.0200		
6	100.4722	99.5905	5.6667	15.2087	502.0589	502.0589	0.0000	0.0200		
6	101.4722	100.5904	5.6667	15.2187	502.1594	502.1594	0.0000	0.0200		
6	102.4722	101.5904	5.6667	15.2287	502.2598	502.2598	0.0000	0.0200		
6	103.4722	102.5903	5.6667	15.2387	502.3603	502.3603	0.0000	0.0200		
6	104.4722	103.5903	5.6667	15.2487	502.4607	502.4607	0.0000	0.0200		
6	105.4722	104.5902	5.6667	15.2587	502.5612	502.5612	0.0000	0.0200		
6	106.4722	105.5902	5.6667	15.2687	502.6618	502.6618	0.0000	0.0200		
6	107.4722	106.5901	5.6667	15.2787	502.7623	502.7623	0.0000	0.0200		
6	108.4722	107.5901	5.6667	15.2887	502.8629	502.8629	0.0000	0.0200		
6	109.4722	108.5900	5.6667	15.2987	502.9635	502.9635	0.0000	0.0200		
6	110.4722	109.5900	5.6667	15.3087	503.0641	503.0641	0.0000	0.0200		
6	111.4722	110.5899	5.6667	15.3187	503.1647	503.1647	0.0000	0.0200		
6	112.4722	111.5899	5.6667	15.3287	503.2653	503.2653	0.0000	0.0200		
6	113.4722	112.5898	5.6667	15.3387	503.3660	503.3660	0.0000	0.0200		
6	114.4722	113.5898	5.6667	15.3487	503.4667	503.4667	0.0000	0.0200		
6	115.4722	114.5897	5.6667	15.3586	503.5674	503.5674	0.0000	0.0200		
6	116.4722	115.5897	5.6667	15.3686	503.6681	503.6681	0.0000	0.0200		
6	117.4722	116.5896	5.6667	15.3786	503.7688	503.7688	0.0000	0.0200		
6	118.4722	117.5896	5.6667	15.3886	503.8696	503.8696	0.0000	0.0200		
6	119.4722	118.5895	5.6667	15.3986	503.9704	503.9704	0.0000	0.0200		
6	120.4722	119.5895	5.6667	15.4086	504.0712	504.0712	0.0000	0.0200		
6	121.4722	120.5894	5.6667	15.4186	504.1720	504.1720	0.0000	0.0200		
6	122.4722	121.5894	5.6667	15.4286	504.2729	504.2729	0.0000	0.0200		

TENDON Full Length - Canopy C4-L, Calculations

Segment	Length (ft)	X (ft)	Y (ft)	Z (ft)	Force (kips)	Force after Anchor-Set (kips)	Angle Change (deg)	Force Loss (%)	Containing Element	Additional Info.
6	123.4722	122.5893	5.6667	15.4386	504.3737	504.3737	0.0000	0.0200		
6	124.4722	123.5893	5.6667	15.4486	504.4746	504.4746	0.0000	0.0200		
6	125.4722	124.5892	5.6667	15.4586	504.5755	504.5755	0.0000	0.0200		
6	126.4722	125.5892	5.6667	15.4686	504.6764	504.6764	0.0000	0.0200		
6	127.4722	126.5891	5.6667	15.4786	504.7774	504.7774	0.0000	0.0200		
6	128.4722	127.5891	5.6667	15.4886	504.8783	504.8783	0.0000	0.0200		
6	129.4722	128.5890	5.6667	15.4986	504.9793	504.9793	0.0000	0.0200		
6	130.4722	129.5890	5.6667	15.5086	505.0803	505.0803	0.0000	0.0200		
6	131.4722	130.5889	5.6667	15.5186	505.1814	505.1814	0.0000	0.0200		
6	132.4722	131.5889	5.6667	15.5286	505.2824	505.2824	0.0000	0.0200		
6	133.4722	132.5888	5.6667	15.5386	505.3835	505.3835	0.0000	0.0200		
6	134.4722	133.5888	5.6667	15.5486	505.4846	505.4846	0.0000	0.0200		
6	135.4722	134.5887	5.6667	15.5585	505.5857	505.5857	0.0000	0.0200		
6	136.4722	135.5887	5.6667	15.5685	505.6868	505.6868	0.0000	0.0200		
6	137.4722	136.5886	5.6667	15.5785	505.7879	505.7879	0.0000	0.0200		
6	138.4722	137.5886	5.6667	15.5885	505.8891	505.8891	0.0000	0.0200		
6	139.4722	138.5885	5.6667	15.5985	505.9903	505.9903	0.0000	0.0200		
6	140.4722	139.5885	5.6667	15.6085	506.0915	506.0915	0.0000	0.0200		
6	141.4722	140.5884	5.6667	15.6185	506.1927	506.1927	0.0000	0.0200		
6	142.4722	141.5884	5.6667	15.6285	506.2940	506.2940	0.0000	0.0200		
6	143.4722	142.5883	5.6667	15.6385	506.3953	506.3953	0.0000	0.0200		
6	144.4722	143.5883	5.6667	15.6485	506.4965	506.4965	0.0000	0.0200		
6	145.4722	144.5882	5.6667	15.6585	506.5979	506.5979	0.0000	0.0200		
6	146.4722	145.5882	5.6667	15.6685	506.6992	506.5582	0.0000	0.0200		
6	147.4722	146.5881	5.6667	15.6785	506.8005	506.4569	0.0000	0.0200		
6	148.4722	147.5881	5.6667	15.6885	506.9019	506.3555	0.0000	0.0200		
6	149.4722	148.5880	5.6667	15.6985	507.0033	506.2541	0.0000	0.0200		
6	150.4722	149.5880	5.6667	15.7085	507.1047	506.1527	0.0000	0.0200		
6	151.4722	150.5879	5.6667	15.7185	507.2061	506.0513	0.0000	0.0200		
6	152.4722	151.5879	5.6667	15.7285	507.3076	505.9498	0.0000	0.0200		
6	153.4722	152.5878	5.6667	15.7385	507.4091	505.8483	0.0000	0.0200		
6	154.4722	153.5878	5.6667	15.7485	507.5106	505.7469	0.0000	0.0200		
6	155.4722	154.5877	5.6667	15.7584	507.6121	505.6453	0.0000	0.0200		
6	156.4722	155.5877	5.6667	15.7684	507.7136	505.5438	0.0000	0.0200		

TENDON Full Length - Canopy C4-L, Calculations

Segment	Length (ft)	X (ft)	Y (ft)	Z (ft)	Force (kips)	Force after Anchor-Set (kips)	Angle Change (deg)	Force Loss (%)	Containing Element	Additional Info.
6	157.4722	156.5876	5.6667	15.7784	507.8152	505.4423	0.0000	0.0200		
6	158.4722	157.5876	5.6667	15.7884	507.9167	505.3407	0.0000	0.0200		
6	159.4722	158.5875	5.6667	15.7984	508.0183	505.2391	0.0000	0.0200		
6	160.4722	159.5875	5.6667	15.8084	508.1199	505.1375	0.0000	0.0200		
6	161.4722	160.5874	5.6667	15.8184	508.2216	505.0358	0.0000	0.0200		
6	162.4722	161.5874	5.6667	15.8284	508.3232	504.9342	0.0000	0.0200		
6	163.4722	162.5873	5.6667	15.8384	508.4249	504.8325	0.0000	0.0200		
6	164.4722	163.5873	5.6667	15.8484	508.5266	504.7308	0.0000	0.0200		
6	165.4722	164.5872	5.6667	15.8584	508.6283	504.6291	0.0000	0.0200		
6	166.4722	165.5872	5.6667	15.8684	508.7300	504.5274	0.0000	0.0200		
6	167.4722	166.5871	5.6667	15.8784	508.8318	504.4256	0.0000	0.0200		
6	168.4722	167.5871	5.6667	15.8884	508.9336	504.3238	0.0000	0.0200		
6	169.4722	168.5870	5.6667	15.8984	509.0354	504.2220	0.0000	0.0200		
6	170.4722	169.5870	5.6667	15.9084	509.1372	504.1202	0.0000	0.0200		
6	171.4722	170.5869	5.6667	15.9184	509.2390	504.0184	0.0000	0.0200		
6	172.4722	171.5869	5.6667	15.9284	509.3409	503.9165	0.0000	0.0200		
6	173.4722	172.5868	5.6667	15.9384	509.4428	503.8146	0.0000	0.0200		
6	174.4722	173.5868	5.6667	15.9483	509.5447	503.7127	0.0000	0.0200		
6	175.4722	174.5867	5.6667	15.9583	509.6466	503.6108	0.0000	0.0200		
6	176.4722	175.5867	5.6667	15.9683	509.7485	503.5089	0.0000	0.0200		
6	177.4722	176.5866	5.6667	15.9783	509.8505	503.4069	0.0000	0.0200		
6	178.4722	177.5866	5.6667	15.9883	509.9525	503.3050	0.0000	0.0200		
6	179.4722	178.5865	5.6667	15.9983	510.0545	503.2030	0.0000	0.0200		
6	180.4722	179.5865	5.6667	16.0083	510.1565	503.1009	0.0000	0.0200		
6	181.4722	180.5864	5.6667	16.0183	510.2585	502.9989	0.0000	0.0200		
6	182.4722	181.5864	5.6667	16.0283	510.3606	502.8968	0.0000	0.0200		
6	183.4722	182.5863	5.6667	16.0383	510.4627	502.7947	0.0000	0.0200		
6	184.4722	183.5863	5.6667	16.0483	510.5648	502.6926	0.0000	0.0200		
6	185.4722	184.5862	5.6667	16.0583	510.6669	502.5905	0.0000	0.0200		
6	186.4722	185.5862	5.6667	16.0683	510.7690	502.4884	0.0000	0.0200		
6	187.4722	186.5861	5.6667	16.0783	510.8712	502.3862	0.0000	0.0200		
6	188.4722	187.5861	5.6667	16.0883	510.9734	502.2840	0.0000	0.0200		
6	189.4722	188.5860	5.6667	16.0983	511.0756	502.1818	0.0000	0.0200		
6	190.4722	189.5860	5.6667	16.1083	511.1778	502.0796	0.0000	0.0200		

TENDON Full Length - Canopy C4-L, Calculations

Segment	Length (ft)	X (ft)	Y (ft)	Z (ft)	Force (kips)	Force after Anchor-Set (kips)	Angle Change (deg)	Force Loss (%)	Containing Element	Additional Info.
6	191.4722	190.5859	5.6667	16.1183	511.2801	501.9773	0.0000	0.0200		
6	192.4722	191.5859	5.6667	16.1283	511.3823	501.8751	0.0000	0.0200		
6	193.4722	192.5858	5.6667	16.1383	511.4846	501.7728	0.0000	0.0200		
6	194.4722	193.5858	5.6667	16.1482	511.5869	501.6705	0.0000	0.0200		
6	195.4722	194.5857	5.6667	16.1582	511.6892	501.5682	0.0000	0.0200		
6	196.4722	195.5857	5.6667	16.1682	511.7916	501.4658	0.0000	0.0200		
6	197.4722	196.5856	5.6667	16.1782	511.8940	501.3634	0.0000	0.0200		
6	198.4722	197.5856	5.6667	16.1882	511.9964	501.2611	0.0000	0.0200		
6	199.4722	198.5855	5.6667	16.1982	512.0988	501.1586	0.0000	0.0200		
6	200.4722	199.5855	5.6667	16.2082	512.2012	501.0562	0.0000	0.0200		
6	201.4722	200.5854	5.6667	16.2182	512.3036	500.9538	0.0000	0.0200		
6	202.4722	201.5854	5.6667	16.2282	512.4061	500.8513	0.0000	0.0200		
6	203.4722	202.5853	5.6667	16.2382	512.5086	500.7488	0.0000	0.0200		
6	204.4722	203.5853	5.6667	16.2482	512.6111	500.6463	0.0000	0.0200		
6	205.4722	204.5852	5.6667	16.2582	512.7137	500.5438	0.0000	0.0200		
6	206.4722	205.5852	5.6667	16.2682	512.8162	500.4412	0.0000	0.0200		
6	207.4722	206.5851	5.6667	16.2782	512.9188	500.3386	0.0000	0.0200		
6	208.4722	207.5851	5.6667	16.2882	513.0214	500.2360	0.0000	0.0200		
6	209.4722	208.5850	5.6667	16.2982	513.1240	500.1334	0.0000	0.0200		
6	210.4722	209.5850	5.6667	16.3082	513.2266	500.0308	0.0000	0.0200		
6	211.4722	210.5849	5.6667	16.3182	513.3293	499.9281	0.0000	0.0200		
6	212.4722	211.5849	5.6667	16.3282	513.4320	499.8255	0.0000	0.0200		
6	213.4722	212.5848	5.6667	16.3382	513.5347	499.7228	0.0000	0.0200		
6	214.4722	213.5848	5.6667	16.3481	513.6374	499.6200	0.0000	0.0200		
6	215.4722	214.5847	5.6667	16.3581	513.7401	499.5173	0.0000	0.0200		
6	216.4722	215.5847	5.6667	16.3681	513.8429	499.4145	0.0000	0.0200		
6	217.4722	216.5846	5.6667	16.3781	513.9456	499.3118	0.0000	0.0200		
6	218.4722	217.5846	5.6667	16.3881	514.0484	499.2090	0.0000	0.0200		
6	219.4722	218.5845	5.6667	16.3981	514.1513	499.1061	0.0000	0.0200		
6	220.4722	219.5845	5.6667	16.4081	514.2541	499.0033	0.0000	0.0200		
6	221.4722	220.5844	5.6667	16.4181	514.3570	498.9004	0.0000	0.0200		
6	222.4722	221.5844	5.6667	16.4281	514.4598	498.7976	0.0000	0.0200		
6	223.4722	222.5843	5.6667	16.4381	514.5627	498.6947	0.0000	0.0200		
6	224.4722	223.5843	5.6667	16.4481	514.6657	498.5917	0.0000	0.0200		

TENDON Full Length - Canopy C4-L, Calculations

Segment	Length (ft)	X (ft)	Y (ft)	Z (ft)	Force (kips)	Force after Anchor-Set (kips)	Angle Change (deg)	Force Loss (%)	Containing Element	Additional Info.
6	225.4722	224.5842	5.6667	16.4581	514.7686	498.4888	0.0000	0.0200		
6	226.4722	225.5842	5.6667	16.4681	514.8716	498.3858	0.0000	0.0200		
6	227.4722	226.5841	5.6667	16.4781	514.9746	498.2828	0.0000	0.0200		
6	228.4722	227.5841	5.6667	16.4881	515.0776	498.1798	0.0000	0.0200		
6	229.4722	228.5840	5.6667	16.4981	515.1806	498.0768	0.0000	0.0200		
6	230.4722	229.5840	5.6667	16.5081	515.2836	497.9738	0.0000	0.0200		
6	231.4722	230.5839	5.6667	16.5181	515.3867	497.8707	0.0000	0.0200		
6	232.4722	231.5839	5.6667	16.5281	515.4898	497.7676	0.0000	0.0200		
6	233.4722	232.5838	5.6667	16.5380	515.5929	497.6645	0.0000	0.0200		
6	234.4722	233.5838	5.6667	16.5480	515.6960	497.5614	0.0000	0.0200		
6	235.4722	234.5837	5.6667	16.5580	515.7992	497.4582	0.0000	0.0200		
6	236.4722	235.5837	5.6667	16.5680	515.9024	497.3551	0.0000	0.0200		
6	237.4722	236.5836	5.6667	16.5780	516.0055	497.2519	0.0000	0.0200		
6	238.4722	237.5836	5.6667	16.5880	516.1088	497.1487	0.0000	0.0200		
6	239.4722	238.5835	5.6667	16.5980	516.2120	497.0454	0.0000	0.0200		
6	240.4722	239.5835	5.6667	16.6080	516.3152	496.9422	0.0000	0.0200		
6	241.4722	240.5834	5.6667	16.6180	516.4185	496.8389	0.0000	0.0200		
6	242.4722	241.5834	5.6667	16.6280	516.5218	496.7356	0.0000	0.0200		
6	243.4722	242.5833	5.6667	16.6380	516.6251	496.6323	0.0000	0.0200		
6	244.4722	243.5833	5.6667	16.6480	516.7285	496.5290	0.0000	0.0200		
6	245.4722	244.5832	5.6667	16.6580	516.8318	496.4256	0.0000	0.0200		
6	246.4722	245.5832	5.6667	16.6680	516.9352	496.3222	0.0000	0.0200		
6	247.4722	246.5831	5.6667	16.6780	517.0386	496.2188	0.0000	0.0200		
6	248.4722	247.5831	5.6667	16.6880	517.1420	496.1154	0.0000	0.0200		
6	249.4722	248.5830	5.6667	16.6980	517.2454	496.0120	0.0000	0.0200		
6	250.4722	249.5830	5.6667	16.7080	517.3489	495.9085	0.0000	0.0200		
6	251.4722	250.5829	5.6667	16.7180	517.4524	495.8050	0.0000	0.0184		
6	252.3909	251.5016	5.6667	16.7271	517.5475	495.7099	4.3749	1.9104		
8	253.3909	252.4985	5.5914	16.7497	527.6275	485.6300	0.0000	0.0200		
8	254.3909	253.4955	5.5162	16.7723	527.7330	485.5244	0.0000	0.0200		
8	255.3909	254.4924	5.4410	16.7949	527.8386	485.4189	0.0000	0.0200		
8	256.3909	255.4893	5.3657	16.8175	527.9441	485.3133	0.0000	0.0200		
8	257.3909	256.4862	5.2905	16.8401	528.0497	485.2077	0.0000	0.0200		
8	258.3909	257.4831	5.2153	16.8627	528.1554	485.1021	0.0000	0.0200		

TENDON Full Length - Canopy C4-L, Calculations

Segment	Length (ft)	X (ft)	Y (ft)	Z (ft)	Force (kips)	Force after Anchor-Set (kips)	Angle Change (deg)	Force Loss (%)	Containing Element	Additional Info.
8	259.3909	258.4800	5.1401	16.8853	528.2610	484.9964	0.0000	0.0200		
8	260.3909	259.4769	5.0648	16.9079	528.3667	484.8908	0.0000	0.0200		
8	261.3909	260.4738	4.9896	16.9304	528.4723	484.7851	0.0000	0.0194		
8	262.3603	261.4402	4.9167	16.9523	528.5748	484.6826	4.3749	1.9104		
8-9	263.3603	262.4401	4.9167	16.9623	538.8695	474.3879	0.0000	0.0200		
8-9	264.3603	263.4401	4.9167	16.9723	538.9773	474.2801	0.0000	0.0200		
8-9	265.3603	264.4400	4.9167	16.9823	539.0851	474.1723	0.0000	0.0200		
8-9	266.3603	265.4400	4.9167	16.9923	539.1930	474.0645	0.0000	0.0200		
8-9	267.3603	266.4399	4.9167	17.0023	539.3008	473.9566	0.0000	0.0200		
8-9	268.3603	267.4399	4.9167	17.0123	539.4087	473.8487	0.0000	0.0200		
8-9	269.3603	268.4398	4.9167	17.0223	539.5166	473.7408	0.0000	0.0038		
9	269.5505	268.6300	4.9167	17.0242	539.5371	473.7203	1.6552	0.7368		
9	270.4170	269.4959	4.9167	17.0579	543.5420	469.7154	3.3104	1.4511		
9	271.2835	270.3584	4.9167	17.1415	551.5456	461.7118	1.6552	0.7321		
10	271.9142	270.9841	4.9167	17.2205	555.6134	457.6440	0.0000	0.0126		
10	272.5448	271.6097	4.9167	17.2995	555.6835	457.5739	0.0000	0.0044		
10	272.7650	271.8282	4.9167	17.3270	555.7080	457.5494	0.0000	0.0000		

TENDON Full Length - Canopy C4-R, Calculations

Segment	Length (ft)	X (ft)	Y (ft)	Z (ft)	Force (kips)	Force after Anchor-Set (kips)	Angle Change (deg)	Force Loss (%)
1	0.0000	-0.8386	-4.9167	14.6004	460.4274	460.4274	0.0000	0.0200
1-2	1.0000	0.1559	-4.9167	14.4950	460.5195	460.5195	0.0000	0.0096
2	1.4815	0.6347	-4.9167	14.4443	460.5638	460.5638	1.6551	0.7368
2	2.3480	1.4986	-4.9167	14.3779	463.9824	463.9824	3.3103	1.4511
2	3.2145	2.3650	-4.9167	14.3616	470.8143	470.8143	1.6551	0.7373
3	4.1060	3.2565	-4.9167	14.3705	474.3114	474.3114	0.0000	0.0178
3	4.9976	4.1480	-4.9167	14.3794	474.3959	474.3959	0.0000	0.0178
3	5.8892	5.0395	-4.9167	14.3883	474.4805	474.4805	0.0000	0.0178
3	6.7807	5.9310	-4.9167	14.3972	474.5652	474.5652	0.0000	0.0178
3	7.6723	6.8225	-4.9167	14.4061	474.6498	474.6498	0.0000	0.0178
3	8.5638	7.7140	-4.9167	14.4151	474.7344	474.7344	0.0000	0.0178
3	9.4554	8.6055	-4.9167	14.4240	474.8191	474.8191	0.0000	0.0178

TENDON Full Length - Canopy C4-R, Calculations

Segment	Length (ft)	X (ft)	Y (ft)	Z (ft)	Force (kips)	Force after Anchor-Set (kips)	Angle Change (deg)	Force Loss (%)	Containing Element	Additional Info.
3	10.3469	9.4970	-4.9167	14.4329	474.9038	474.9038	0.0000	0.0000		
3	10.3470	9.4972	-4.9167	14.4329	474.9038	474.9038	4.3064	1.8811		
4	11.3470	10.4944	-4.9907	14.4305	484.0085	484.0085	0.0000	0.0200		
4	12.3470	11.4917	-5.0648	14.4282	484.1053	484.1053	0.0000	0.0200		
4	13.3470	12.4889	-5.1389	14.4258	484.2021	484.2021	0.0000	0.0200		
4	14.3470	13.4862	-5.2130	14.4235	484.2990	484.2990	0.0000	0.0200		
4	15.3470	14.4834	-5.2870	14.4212	484.3958	484.3958	0.0000	0.0200		
4	16.3470	15.4807	-5.3611	14.4188	484.4927	484.4927	0.0000	0.0200		
4	17.3470	16.4779	-5.4352	14.4165	484.5896	484.5896	0.0000	0.0200		
4	18.3470	17.4752	-5.5093	14.4141	484.6866	484.6866	0.0000	0.0200		
4	19.3470	18.4724	-5.5833	14.4118	484.7835	484.7835	0.0000	0.0200		
4	20.3470	19.4697	-5.6574	14.4094	484.8805	484.8805	0.0000	0.0025		
4	20.4722	19.5945	-5.6667	14.4091	484.8926	484.8926	4.3064	1.8811		
6	21.4722	20.5944	-5.6667	14.4191	494.1887	494.1887	0.0000	0.0200		
6	22.4722	21.5944	-5.6667	14.4291	494.2876	494.2876	0.0000	0.0200		
6	23.4722	22.5943	-5.6667	14.4391	494.3865	494.3865	0.0000	0.0200		
6	24.4722	23.5943	-5.6667	14.4491	494.4853	494.4853	0.0000	0.0200		
6	25.4722	24.5942	-5.6667	14.4591	494.5842	494.5842	0.0000	0.0200		
6	26.4722	25.5942	-5.6667	14.4691	494.6832	494.6832	0.0000	0.0200		
6	27.4722	26.5941	-5.6667	14.4791	494.7821	494.7821	0.0000	0.0200		
6	28.4722	27.5941	-5.6667	14.4891	494.8811	494.8811	0.0000	0.0200		
6	29.4722	28.5940	-5.6667	14.4991	494.9801	494.9801	0.0000	0.0200		
6	30.4722	29.5940	-5.6667	14.5091	495.0791	495.0791	0.0000	0.0200		
6	31.4722	30.5939	-5.6667	14.5191	495.1781	495.1781	0.0000	0.0200		
6	32.4722	31.5939	-5.6667	14.5291	495.2772	495.2772	0.0000	0.0200		
6	33.4722	32.5938	-5.6667	14.5391	495.3762	495.3762	0.0000	0.0200		
6	34.4722	33.5938	-5.6667	14.5491	495.4753	495.4753	0.0000	0.0200		
6	35.4722	34.5937	-5.6667	14.5591	495.5744	495.5744	0.0000	0.0200		
6	36.4722	35.5937	-5.6667	14.5690	495.6735	495.6735	0.0000	0.0200		
6	37.4722	36.5936	-5.6667	14.5790	495.7727	495.7727	0.0000	0.0200		
6	38.4722	37.5936	-5.6667	14.5890	495.8718	495.8718	0.0000	0.0200		
6	39.4722	38.5935	-5.6667	14.5990	495.9710	495.9710	0.0000	0.0200		
6	40.4722	39.5935	-5.6667	14.6090	496.0702	496.0702	0.0000	0.0200		
6	41.4722	40.5934	-5.6667	14.6190	496.1695	496.1695	0.0000	0.0200		

TENDON Full Length - Canopy C4-R, Calculations

Segment	Length (ft)	X (ft)	Y (ft)	Z (ft)	Force (kips)	Force after Anchor-Set (kips)	Angle Change (deg)	Force Loss (%)	Containing Element	Additional Info.
6	42.4722	41.5934	-5.6667	14.6290	496.2687	496.2687	0.0000	0.0200		
6	43.4722	42.5933	-5.6667	14.6390	496.3680	496.3680	0.0000	0.0200		
6	44.4722	43.5933	-5.6667	14.6490	496.4672	496.4672	0.0000	0.0200		
6	45.4722	44.5932	-5.6667	14.6590	496.5665	496.5665	0.0000	0.0200		
6	46.4722	45.5932	-5.6667	14.6690	496.6659	496.6659	0.0000	0.0200		
6	47.4722	46.5931	-5.6667	14.6790	496.7652	496.7652	0.0000	0.0200		
6	48.4722	47.5931	-5.6667	14.6890	496.8646	496.8646	0.0000	0.0200		
6	49.4722	48.5930	-5.6667	14.6990	496.9640	496.9640	0.0000	0.0200		
6	50.4722	49.5930	-5.6667	14.7090	497.0634	497.0634	0.0000	0.0200		
6	51.4722	50.5929	-5.6667	14.7190	497.1628	497.1628	0.0000	0.0200		
6	52.4722	51.5929	-5.6667	14.7290	497.2622	497.2622	0.0000	0.0200		
6	53.4722	52.5928	-5.6667	14.7390	497.3617	497.3617	0.0000	0.0200		
6	54.4722	53.5928	-5.6667	14.7490	497.4612	497.4612	0.0000	0.0200		
6	55.4722	54.5927	-5.6667	14.7590	497.5607	497.5607	0.0000	0.0200		
6	56.4722	55.5927	-5.6667	14.7689	497.6602	497.6602	0.0000	0.0200		
6	57.4722	56.5926	-5.6667	14.7789	497.7597	497.7597	0.0000	0.0200		
6	58.4722	57.5926	-5.6667	14.7889	497.8593	497.8593	0.0000	0.0200		
6	59.4722	58.5925	-5.6667	14.7989	497.9589	497.9589	0.0000	0.0200		
6	60.4722	59.5925	-5.6667	14.8089	498.0585	498.0585	0.0000	0.0200		
6	61.4722	60.5924	-5.6667	14.8189	498.1581	498.1581	0.0000	0.0200		
6	62.4722	61.5924	-5.6667	14.8289	498.2577	498.2577	0.0000	0.0200		
6	63.4722	62.5923	-5.6667	14.8389	498.3574	498.3574	0.0000	0.0200		
6	64.4722	63.5923	-5.6667	14.8489	498.4571	498.4571	0.0000	0.0200		
6	65.4722	64.5922	-5.6667	14.8589	498.5568	498.5568	0.0000	0.0200		
6	66.4722	65.5922	-5.6667	14.8689	498.6565	498.6565	0.0000	0.0200		
6	67.4722	66.5921	-5.6667	14.8789	498.7563	498.7563	0.0000	0.0200		
6	68.4722	67.5921	-5.6667	14.8889	498.8560	498.8560	0.0000	0.0200		
6	69.4722	68.5920	-5.6667	14.8989	498.9558	498.9558	0.0000	0.0200		
6	70.4722	69.5920	-5.6667	14.9089	499.0556	499.0556	0.0000	0.0200		
6	71.4722	70.5919	-5.6667	14.9189	499.1554	499.1554	0.0000	0.0200		
6	72.4722	71.5919	-5.6667	14.9289	499.2553	499.2553	0.0000	0.0200		
6	73.4722	72.5918	-5.6667	14.9389	499.3551	499.3551	0.0000	0.0200		
6	74.4722	73.5918	-5.6667	14.9489	499.4550	499.4550	0.0000	0.0200		
6	75.4722	74.5917	-5.6667	14.9589	499.5549	499.5549	0.0000	0.0200		

TENDON Full Length - Canopy C4-R, Calculations

Segment	Length (ft)	X (ft)	Y (ft)	Z (ft)	Force (kips)	Force after Anchor-Set (kips)	Angle Change (deg)	Force Loss (%)	Containing Element	Additional Info.
6	76.4722	75.5917	-5.6667	14.9688	499.6548	499.6548	0.0000	0.0200		
6	77.4722	76.5916	-5.6667	14.9788	499.7548	499.7548	0.0000	0.0200		
6	78.4722	77.5916	-5.6667	14.9888	499.8547	499.8547	0.0000	0.0200		
6	79.4722	78.5915	-5.6667	14.9988	499.9547	499.9547	0.0000	0.0200		
6	80.4722	79.5915	-5.6667	15.0088	500.0547	500.0547	0.0000	0.0200		
6	81.4722	80.5914	-5.6667	15.0188	500.1547	500.1547	0.0000	0.0200		
6	82.4722	81.5914	-5.6667	15.0288	500.2548	500.2548	0.0000	0.0200		
6	83.4722	82.5913	-5.6667	15.0388	500.3548	500.3548	0.0000	0.0200		
6	84.4722	83.5913	-5.6667	15.0488	500.4549	500.4549	0.0000	0.0200		
6	85.4722	84.5912	-5.6667	15.0588	500.5550	500.5550	0.0000	0.0200		
6	86.4722	85.5912	-5.6667	15.0688	500.6551	500.6551	0.0000	0.0200		
6	87.4722	86.5911	-5.6667	15.0788	500.7553	500.7553	0.0000	0.0200		
6	88.4722	87.5911	-5.6667	15.0888	500.8554	500.8554	0.0000	0.0200		
6	89.4722	88.5910	-5.6667	15.0988	500.9556	500.9556	0.0000	0.0200		
6	90.4722	89.5910	-5.6667	15.1088	501.0558	501.0558	0.0000	0.0200		
6	91.4722	90.5909	-5.6667	15.1188	501.1560	501.1560	0.0000	0.0200		
6	92.4722	91.5909	-5.6667	15.1288	501.2563	501.2563	0.0000	0.0200		
6	93.4722	92.5908	-5.6667	15.1388	501.3565	501.3565	0.0000	0.0200		
6	94.4722	93.5908	-5.6667	15.1488	501.4568	501.4568	0.0000	0.0200		
6	95.4722	94.5907	-5.6667	15.1587	501.5571	501.5571	0.0000	0.0200		
6	96.4722	95.5907	-5.6667	15.1687	501.6574	501.6574	0.0000	0.0200		
6	97.4722	96.5906	-5.6667	15.1787	501.7578	501.7578	0.0000	0.0200		
6	98.4722	97.5906	-5.6667	15.1887	501.8581	501.8581	0.0000	0.0200		
6	99.4722	98.5905	-5.6667	15.1987	501.9585	501.9585	0.0000	0.0200		
6	100.4722	99.5905	-5.6667	15.2087	502.0589	502.0589	0.0000	0.0200		
6	101.4722	100.5904	-5.6667	15.2187	502.1594	502.1594	0.0000	0.0200		
6	102.4722	101.5904	-5.6667	15.2287	502.2598	502.2598	0.0000	0.0200		
6	103.4722	102.5903	-5.6667	15.2387	502.3603	502.3603	0.0000	0.0200		
6	104.4722	103.5903	-5.6667	15.2487	502.4607	502.4607	0.0000	0.0200		
6	105.4722	104.5902	-5.6667	15.2587	502.5612	502.5612	0.0000	0.0200		
6	106.4722	105.5902	-5.6667	15.2687	502.6618	502.6618	0.0000	0.0200		
6	107.4722	106.5901	-5.6667	15.2787	502.7623	502.7623	0.0000	0.0200		
6	108.4722	107.5901	-5.6667	15.2887	502.8629	502.8629	0.0000	0.0200		
6	109.4722	108.5900	-5.6667	15.2987	502.9635	502.9635	0.0000	0.0200		

TENDON Full Length - Canopy C4-R, Calculations

Segment	Length (ft)	X (ft)	Y (ft)	Z (ft)	Force (kips)	Force after Anchor-Set (kips)	Angle Change (deg)	Force Loss (%)	Containing Element	Additional Info.
6	110.4722	109.5900	-5.6667	15.3087	503.0641	503.0641	0.0000	0.0200		
6	111.4722	110.5899	-5.6667	15.3187	503.1647	503.1647	0.0000	0.0200		
6	112.4722	111.5899	-5.6667	15.3287	503.2653	503.2653	0.0000	0.0200		
6	113.4722	112.5898	-5.6667	15.3387	503.3660	503.3660	0.0000	0.0200		
6	114.4722	113.5898	-5.6667	15.3487	503.4667	503.4667	0.0000	0.0200		
6	115.4722	114.5897	-5.6667	15.3586	503.5674	503.5674	0.0000	0.0200		
6	116.4722	115.5897	-5.6667	15.3686	503.6681	503.6681	0.0000	0.0200		
6	117.4722	116.5896	-5.6667	15.3786	503.7688	503.7688	0.0000	0.0200		
6	118.4722	117.5896	-5.6667	15.3886	503.8696	503.8696	0.0000	0.0200		
6	119.4722	118.5895	-5.6667	15.3986	503.9704	503.9704	0.0000	0.0200		
6	120.4722	119.5895	-5.6667	15.4086	504.0712	504.0712	0.0000	0.0200		
6	121.4722	120.5894	-5.6667	15.4186	504.1720	504.1720	0.0000	0.0200		
6	122.4722	121.5894	-5.6667	15.4286	504.2729	504.2729	0.0000	0.0200		
6	123.4722	122.5893	-5.6667	15.4386	504.3737	504.3737	0.0000	0.0200		
6	124.4722	123.5893	-5.6667	15.4486	504.4746	504.4746	0.0000	0.0200		
6	125.4722	124.5892	-5.6667	15.4586	504.5755	504.5755	0.0000	0.0200		
6	126.4722	125.5892	-5.6667	15.4686	504.6764	504.6764	0.0000	0.0200		
6	127.4722	126.5891	-5.6667	15.4786	504.7774	504.7774	0.0000	0.0200		
6	128.4722	127.5891	-5.6667	15.4886	504.8783	504.8783	0.0000	0.0200		
6	129.4722	128.5890	-5.6667	15.4986	504.9793	504.9793	0.0000	0.0200		
6	130.4722	129.5890	-5.6667	15.5086	505.0803	505.0803	0.0000	0.0200		
6	131.4722	130.5889	-5.6667	15.5186	505.1814	505.1814	0.0000	0.0200		
6	132.4722	131.5889	-5.6667	15.5286	505.2824	505.2824	0.0000	0.0200		
6	133.4722	132.5888	-5.6667	15.5386	505.3835	505.3835	0.0000	0.0200		
6	134.4722	133.5888	-5.6667	15.5486	505.4846	505.4846	0.0000	0.0200		
6	135.4722	134.5887	-5.6667	15.5585	505.5857	505.5857	0.0000	0.0200		
6	136.4722	135.5887	-5.6667	15.5685	505.6868	505.6868	0.0000	0.0200		
6	137.4722	136.5886	-5.6667	15.5785	505.7879	505.7879	0.0000	0.0200		
6	138.4722	137.5886	-5.6667	15.5885	505.8891	505.8891	0.0000	0.0200		
6	139.4722	138.5885	-5.6667	15.5985	505.9903	505.9903	0.0000	0.0200		
6	140.4722	139.5885	-5.6667	15.6085	506.0915	506.0915	0.0000	0.0200		
6	141.4722	140.5884	-5.6667	15.6185	506.1927	506.1927	0.0000	0.0200		
6	142.4722	141.5884	-5.6667	15.6285	506.2940	506.2940	0.0000	0.0200		
6	143.4722	142.5883	-5.6667	15.6385	506.3953	506.3953	0.0000	0.0200		

TENDON Full Length - Canopy C4-R, Calculations

Segment	Length (ft)	X (ft)	Y (ft)	Z (ft)	Force (kips)	Force after Anchor-Set (kips)	Angle Change (deg)	Force Loss (%)	Containing Element	Additional Info.
6	144.4722	143.5883	-5.6667	15.6485	506.4965	506.4965	0.0000	0.0200		
6	145.4722	144.5882	-5.6667	15.6585	506.5979	506.5979	0.0000	0.0200		
6	146.4722	145.5882	-5.6667	15.6685	506.6992	506.5582	0.0000	0.0200		
6	147.4722	146.5881	-5.6667	15.6785	506.8005	506.4569	0.0000	0.0200		
6	148.4722	147.5881	-5.6667	15.6885	506.9019	506.3555	0.0000	0.0200		
6	149.4722	148.5880	-5.6667	15.6985	507.0033	506.2541	0.0000	0.0200		
6	150.4722	149.5880	-5.6667	15.7085	507.1047	506.1527	0.0000	0.0200		
6	151.4722	150.5879	-5.6667	15.7185	507.2061	506.0513	0.0000	0.0200		
6	152.4722	151.5879	-5.6667	15.7285	507.3076	505.9498	0.0000	0.0200		
6	153.4722	152.5878	-5.6667	15.7385	507.4091	505.8483	0.0000	0.0200		
6	154.4722	153.5878	-5.6667	15.7485	507.5106	505.7469	0.0000	0.0200		
6	155.4722	154.5877	-5.6667	15.7584	507.6121	505.6453	0.0000	0.0200		
6	156.4722	155.5877	-5.6667	15.7684	507.7136	505.5438	0.0000	0.0200		
6	157.4722	156.5876	-5.6667	15.7784	507.8152	505.4423	0.0000	0.0200		
6	158.4722	157.5876	-5.6667	15.7884	507.9167	505.3407	0.0000	0.0200		
6	159.4722	158.5875	-5.6667	15.7984	508.0183	505.2391	0.0000	0.0200		
6	160.4722	159.5875	-5.6667	15.8084	508.1199	505.1375	0.0000	0.0200		
6	161.4722	160.5874	-5.6667	15.8184	508.2216	505.0358	0.0000	0.0200		
6	162.4722	161.5874	-5.6667	15.8284	508.3232	504.9342	0.0000	0.0200		
6	163.4722	162.5873	-5.6667	15.8384	508.4249	504.8325	0.0000	0.0200		
6	164.4722	163.5873	-5.6667	15.8484	508.5266	504.7308	0.0000	0.0200		
6	165.4722	164.5872	-5.6667	15.8584	508.6283	504.6291	0.0000	0.0200		
6	166.4722	165.5872	-5.6667	15.8684	508.7300	504.5274	0.0000	0.0200		
6	167.4722	166.5871	-5.6667	15.8784	508.8318	504.4256	0.0000	0.0200		
6	168.4722	167.5871	-5.6667	15.8884	508.9336	504.3238	0.0000	0.0200		
6	169.4722	168.5870	-5.6667	15.8984	509.0354	504.2220	0.0000	0.0200		
6	170.4722	169.5870	-5.6667	15.9084	509.1372	504.1202	0.0000	0.0200		
6	171.4722	170.5869	-5.6667	15.9184	509.2390	504.0184	0.0000	0.0200		
6	172.4722	171.5869	-5.6667	15.9284	509.3409	503.9165	0.0000	0.0200		
6	173.4722	172.5868	-5.6667	15.9384	509.4428	503.8146	0.0000	0.0200		
6	174.4722	173.5868	-5.6667	15.9483	509.5447	503.7127	0.0000	0.0200		
6	175.4722	174.5867	-5.6667	15.9583	509.6466	503.6108	0.0000	0.0200		
6	176.4722	175.5867	-5.6667	15.9683	509.7485	503.5089	0.0000	0.0200		
6	177.4722	176.5866	-5.6667	15.9783	509.8505	503.4069	0.0000	0.0200		

TENDON Full Length - Canopy C4-R, Calculations

Segment	Length (ft)	X (ft)	Y (ft)	Z (ft)	Force (kips)	Force after Anchor-Set (kips)	Angle Change (deg)	Force Loss (%)	Containing Element	Additional Info.
6	178.4722	177.5866	-5.6667	15.9883	509.9525	503.3050	0.0000	0.0200		
6	179.4722	178.5865	-5.6667	15.9983	510.0545	503.2030	0.0000	0.0200		
6	180.4722	179.5865	-5.6667	16.0083	510.1565	503.1009	0.0000	0.0200		
6	181.4722	180.5864	-5.6667	16.0183	510.2585	502.9989	0.0000	0.0200		
6	182.4722	181.5864	-5.6667	16.0283	510.3606	502.8968	0.0000	0.0200		
6	183.4722	182.5863	-5.6667	16.0383	510.4627	502.7947	0.0000	0.0200		
6	184.4722	183.5863	-5.6667	16.0483	510.5648	502.6926	0.0000	0.0200		
6	185.4722	184.5862	-5.6667	16.0583	510.6669	502.5905	0.0000	0.0200		
6	186.4722	185.5862	-5.6667	16.0683	510.7690	502.4884	0.0000	0.0200		
6	187.4722	186.5861	-5.6667	16.0783	510.8712	502.3862	0.0000	0.0200		
6	188.4722	187.5861	-5.6667	16.0883	510.9734	502.2840	0.0000	0.0200		
6	189.4722	188.5860	-5.6667	16.0983	511.0756	502.1818	0.0000	0.0200		
6	190.4722	189.5860	-5.6667	16.1083	511.1778	502.0796	0.0000	0.0200		
6	191.4722	190.5859	-5.6667	16.1183	511.2801	501.9773	0.0000	0.0200		
6	192.4722	191.5859	-5.6667	16.1283	511.3823	501.8751	0.0000	0.0200		
6	193.4722	192.5858	-5.6667	16.1383	511.4846	501.7728	0.0000	0.0200		
6	194.4722	193.5858	-5.6667	16.1482	511.5869	501.6705	0.0000	0.0200		
6	195.4722	194.5857	-5.6667	16.1582	511.6892	501.5682	0.0000	0.0200		
6	196.4722	195.5857	-5.6667	16.1682	511.7916	501.4658	0.0000	0.0200		
6	197.4722	196.5856	-5.6667	16.1782	511.8940	501.3634	0.0000	0.0200		
6	198.4722	197.5856	-5.6667	16.1882	511.9964	501.2611	0.0000	0.0200		
6	199.4722	198.5855	-5.6667	16.1982	512.0988	501.1586	0.0000	0.0200		
6	200.4722	199.5855	-5.6667	16.2082	512.2012	501.0562	0.0000	0.0200		
6	201.4722	200.5854	-5.6667	16.2182	512.3036	500.9538	0.0000	0.0200		
6	202.4722	201.5854	-5.6667	16.2282	512.4061	500.8513	0.0000	0.0200		
6	203.4722	202.5853	-5.6667	16.2382	512.5086	500.7488	0.0000	0.0200		
6	204.4722	203.5853	-5.6667	16.2482	512.6111	500.6463	0.0000	0.0200		
6	205.4722	204.5852	-5.6667	16.2582	512.7137	500.5438	0.0000	0.0200		
6	206.4722	205.5852	-5.6667	16.2682	512.8162	500.4412	0.0000	0.0200		
6	207.4722	206.5851	-5.6667	16.2782	512.9188	500.3386	0.0000	0.0200		
6	208.4722	207.5851	-5.6667	16.2882	513.0214	500.2360	0.0000	0.0200		
6	209.4722	208.5850	-5.6667	16.2982	513.1240	500.1334	0.0000	0.0200		
6	210.4722	209.5850	-5.6667	16.3082	513.2266	500.0308	0.0000	0.0200		
6	211.4722	210.5849	-5.6667	16.3182	513.3293	499.9281	0.0000	0.0200		

TENDON Full Length - Canopy C4-R, Calculations

Segment	Length (ft)	X (ft)	Y (ft)	Z (ft)	Force (kips)	Force after Anchor-Set (kips)	Angle Change (deg)	Force Loss (%)	Containing Element	Additional Info.
6	212.4722	211.5849	-5.6667	16.3282	513.4320	499.8255	0.0000	0.0200		
6	213.4722	212.5848	-5.6667	16.3382	513.5347	499.7228	0.0000	0.0200		
6	214.4722	213.5848	-5.6667	16.3481	513.6374	499.6200	0.0000	0.0200		
6	215.4722	214.5847	-5.6667	16.3581	513.7401	499.5173	0.0000	0.0200		
6	216.4722	215.5847	-5.6667	16.3681	513.8429	499.4145	0.0000	0.0200		
6	217.4722	216.5846	-5.6667	16.3781	513.9456	499.3118	0.0000	0.0200		
6	218.4722	217.5846	-5.6667	16.3881	514.0484	499.2090	0.0000	0.0200		
6	219.4722	218.5845	-5.6667	16.3981	514.1513	499.1061	0.0000	0.0200		
6	220.4722	219.5845	-5.6667	16.4081	514.2541	499.0033	0.0000	0.0200		
6	221.4722	220.5844	-5.6667	16.4181	514.3570	498.9004	0.0000	0.0200		
6	222.4722	221.5844	-5.6667	16.4281	514.4598	498.7976	0.0000	0.0200		
6	223.4722	222.5843	-5.6667	16.4381	514.5627	498.6947	0.0000	0.0200		
6	224.4722	223.5843	-5.6667	16.4481	514.6657	498.5917	0.0000	0.0200		
6	225.4722	224.5842	-5.6667	16.4581	514.7686	498.4888	0.0000	0.0200		
6	226.4722	225.5842	-5.6667	16.4681	514.8716	498.3858	0.0000	0.0200		
6	227.4722	226.5841	-5.6667	16.4781	514.9746	498.2828	0.0000	0.0200		
6	228.4722	227.5841	-5.6667	16.4881	515.0776	498.1798	0.0000	0.0200		
6	229.4722	228.5840	-5.6667	16.4981	515.1806	498.0768	0.0000	0.0200		
6	230.4722	229.5840	-5.6667	16.5081	515.2836	497.9738	0.0000	0.0200		
6	231.4722	230.5839	-5.6667	16.5181	515.3867	497.8707	0.0000	0.0200		
6	232.4722	231.5839	-5.6667	16.5281	515.4898	497.7676	0.0000	0.0200		
6	233.4722	232.5838	-5.6667	16.5380	515.5929	497.6645	0.0000	0.0200		
6	234.4722	233.5838	-5.6667	16.5480	515.6960	497.5614	0.0000	0.0200		
6	235.4722	234.5837	-5.6667	16.5580	515.7992	497.4582	0.0000	0.0200		
6	236.4722	235.5837	-5.6667	16.5680	515.9024	497.3551	0.0000	0.0200		
6	237.4722	236.5836	-5.6667	16.5780	516.0055	497.2519	0.0000	0.0200		
6	238.4722	237.5836	-5.6667	16.5880	516.1088	497.1487	0.0000	0.0200		
6	239.4722	238.5835	-5.6667	16.5980	516.2120	497.0454	0.0000	0.0200		
6	240.4722	239.5835	-5.6667	16.6080	516.3152	496.9422	0.0000	0.0200		
6	241.4722	240.5834	-5.6667	16.6180	516.4185	496.8389	0.0000	0.0200		
6	242.4722	241.5834	-5.6667	16.6280	516.5218	496.7356	0.0000	0.0200		
6	243.4722	242.5833	-5.6667	16.6380	516.6251	496.6323	0.0000	0.0200		
6	244.4722	243.5833	-5.6667	16.6480	516.7285	496.5290	0.0000	0.0200		
6	245.4722	244.5832	-5.6667	16.6580	516.8318	496.4256	0.0000	0.0200		

TENDON Full Length - Canopy C4-R, Calculations

Segment	Length (ft)	X (ft)	Y (ft)	Z (ft)	Force (kips)	Force after Anchor-Set (kips)	Angle Change (deg)	Force Loss (%)	Containing Element	Additional Info.
6	246.4722	245.5832	-5.6667	16.6680	516.9352	496.3222	0.0000	0.0200		
6	247.4722	246.5831	-5.6667	16.6780	517.0386	496.2188	0.0000	0.0200		
6	248.4722	247.5831	-5.6667	16.6880	517.1420	496.1154	0.0000	0.0200		
6	249.4722	248.5830	-5.6667	16.6980	517.2454	496.0120	0.0000	0.0200		
6	250.4722	249.5830	-5.6667	16.7080	517.3489	495.9085	0.0000	0.0200		
6	251.4722	250.5829	-5.6667	16.7180	517.4524	495.8050	0.0000	0.0184		
6	252.3909	251.5016	-5.6667	16.7271	517.5475	495.7099	4.3749	1.9104		
8	253.3909	252.4985	-5.5914	16.7497	527.6275	485.6300	0.0000	0.0200		
8	254.3909	253.4955	-5.5162	16.7723	527.7330	485.5244	0.0000	0.0200		
8	255.3909	254.4924	-5.4410	16.7949	527.8386	485.4189	0.0000	0.0200		
8	256.3909	255.4893	-5.3657	16.8175	527.9441	485.3133	0.0000	0.0200		
8	257.3909	256.4862	-5.2905	16.8401	528.0497	485.2077	0.0000	0.0200		
8	258.3909	257.4831	-5.2153	16.8627	528.1554	485.1021	0.0000	0.0200		
8	259.3909	258.4800	-5.1401	16.8853	528.2610	484.9964	0.0000	0.0200		
8	260.3909	259.4769	-5.0648	16.9079	528.3667	484.8908	0.0000	0.0200		
8	261.3909	260.4738	-4.9896	16.9304	528.4723	484.7851	0.0000	0.0194		
8	262.3603	261.4402	-4.9167	16.9523	528.5748	484.6826	4.3749	1.9104		
8-9	263.3603	262.4401	-4.9167	16.9623	538.8695	474.3879	0.0000	0.0200		
8-9	264.3603	263.4401	-4.9167	16.9723	538.9773	474.2801	0.0000	0.0200		
8-9	265.3603	264.4400	-4.9167	16.9823	539.0851	474.1723	0.0000	0.0200		
8-9	266.3603	265.4400	-4.9167	16.9923	539.1930	474.0645	0.0000	0.0200		
8-9	267.3603	266.4399	-4.9167	17.0023	539.3008	473.9566	0.0000	0.0200		
8-9	268.3603	267.4399	-4.9167	17.0123	539.4087	473.8487	0.0000	0.0200		
8-9	269.3603	268.4398	-4.9167	17.0223	539.5166	473.7408	0.0000	0.0038		
9	269.5505	268.6300	-4.9167	17.0242	539.5371	473.7203	1.6552	0.7368		
9	270.4170	269.4959	-4.9167	17.0579	543.5420	469.7154	3.3104	1.4511		
9	271.2835	270.3584	-4.9167	17.1415	551.5456	461.7118	1.6552	0.7321		
10	271.9142	270.9841	-4.9167	17.2205	555.6134	457.6440	0.0000	0.0126		
10	272.5448	271.6097	-4.9167	17.2995	555.6835	457.5739	0.0000	0.0044		
10	272.7650	271.8282	-4.9167	17.3270	555.7080	457.5494	0.0000	0.0000		

TENDON Full Length - Canopy C1-L, Calculations

Segment	Length (ft)	X (ft)	Y (ft)	Z (ft)	Force (kips)	Force after Anchor-Set (kips)	Angle Change (deg)	Force Loss (%)
1	0.0000	-0.8394	1.1667	14.6837	425.2846	425.2846	0.0000	0.0200
1-2	1.0000	0.1555	1.1667	14.5827	425.3697	425.3697	0.0000	0.0103
2	1.5135	0.6663	1.1667	14.5309	425.4133	425.4133	1.5920	0.7088
2	2.3469	1.4975	1.1667	14.4698	428.4502	428.4502	3.1840	1.3961
2	3.1804	2.3309	1.1667	14.4550	434.5166	434.5166	1.5920	0.7100
3	4.0761	3.2265	1.1667	14.4639	437.6238	437.6238	0.0000	0.0179
3	4.9718	4.1222	1.1667	14.4729	437.7022	437.7022	0.0000	0.0179
3	5.8675	5.0178	1.1667	14.4818	437.7806	437.7806	0.0000	0.0179
3	6.7632	5.9135	1.1667	14.4908	437.8591	437.8591	0.0000	0.0179
3	7.6589	6.8091	1.1667	14.4998	437.9375	437.9375	0.0000	0.0179
3	8.5546	7.7048	1.1667	14.5087	438.0160	438.0160	0.0000	0.0179
3	9.4503	8.6004	1.1667	14.5177	438.0944	438.0944	0.0000	0.0179
3	10.3460	9.4961	1.1667	14.5266	438.1729	438.1729	0.0000	0.0000
3	10.3461	9.4962	1.1667	14.5266	438.1729	438.1729	8.9444	3.8468
4	11.3461	10.4841	1.3216	14.5233	455.7028	455.7028	0.0000	0.0200
4	12.3461	11.4721	1.4765	14.5199	455.7940	455.7940	0.0000	0.0200
4	13.3461	12.4600	1.6314	14.5166	455.8851	455.8851	0.0000	0.0200
4	14.3461	13.4479	1.7863	14.5133	455.9763	455.9763	0.0000	0.0200
4	15.3461	14.4358	1.9412	14.5099	456.0675	456.0675	0.0000	0.0200
4	16.3461	15.4237	2.0961	14.5066	456.1587	456.1587	0.0000	0.0200
4	17.3461	16.4117	2.2511	14.5032	456.2500	456.2500	0.0000	0.0200
4	18.3461	17.3996	2.4060	14.4999	456.3412	456.3412	0.0000	0.0200
4	19.3461	18.3875	2.5609	14.4965	456.4325	456.4325	0.0000	0.0200
4	20.3461	19.3754	2.7158	14.4932	456.5238	456.5238	0.0000	0.0044
4	20.5669	19.5936	2.7500	14.4925	456.5440	456.5440	8.9443	3.8468
6	21.5669	20.5936	2.7500	14.5025	474.8088	474.8088	0.0000	0.0200
6	22.5669	21.5935	2.7500	14.5124	474.9037	474.9037	0.0000	0.0200
6	23.5669	22.5935	2.7500	14.5224	474.9987	474.9987	0.0000	0.0200
6	24.5669	23.5934	2.7500	14.5324	475.0937	475.0937	0.0000	0.0200
6	25.5669	24.5934	2.7500	14.5424	475.1888	475.1888	0.0000	0.0200
6	26.5669	25.5933	2.7500	14.5524	475.2838	475.2838	0.0000	0.0200
6	27.5669	26.5933	2.7500	14.5624	475.3789	475.3789	0.0000	0.0200

TENDON Full Length - Canopy C1-L, Calculations

Segment	Length (ft)	X (ft)	Y (ft)	Z (ft)	Force (kips)	Force after Anchor-Set (kips)	Angle Change (deg)	Force Loss (%)	Containing Element	Additional Info.
6	28.5669	27.5932	2.7500	14.5724	475.4740	475.4740	0.0000	0.0200		
6	29.5669	28.5932	2.7500	14.5824	475.5691	475.5691	0.0000	0.0200		
6	30.5669	29.5931	2.7500	14.5924	475.6642	475.6642	0.0000	0.0200		
6	31.5669	30.5931	2.7500	14.6024	475.7593	475.7593	0.0000	0.0200		
6	32.5669	31.5930	2.7500	14.6124	475.8545	475.8545	0.0000	0.0200		
6	33.5669	32.5930	2.7500	14.6224	475.9497	475.9497	0.0000	0.0200		
6	34.5669	33.5929	2.7500	14.6324	476.0449	476.0449	0.0000	0.0200		
6	35.5669	34.5929	2.7500	14.6424	476.1401	476.1401	0.0000	0.0200		
6	36.5669	35.5928	2.7500	14.6524	476.2353	476.2353	0.0000	0.0200		
6	37.5669	36.5928	2.7500	14.6624	476.3306	476.3306	0.0000	0.0200		
6	38.5669	37.5927	2.7500	14.6724	476.4259	476.4259	0.0000	0.0200		
6	39.5669	38.5927	2.7500	14.6824	476.5212	476.5212	0.0000	0.0200		
6	40.5669	39.5926	2.7500	14.6924	476.6165	476.6165	0.0000	0.0200		
6	41.5669	40.5926	2.7500	14.7024	476.7118	476.7118	0.0000	0.0200		
6	42.5669	41.5925	2.7500	14.7123	476.8072	476.8072	0.0000	0.0200		
6	43.5669	42.5925	2.7500	14.7223	476.9025	476.9025	0.0000	0.0200		
6	44.5669	43.5924	2.7500	14.7323	476.9979	476.9979	0.0000	0.0200		
6	45.5669	44.5924	2.7500	14.7423	477.0933	477.0933	0.0000	0.0200		
6	46.5669	45.5923	2.7500	14.7523	477.1888	477.1888	0.0000	0.0200		
6	47.5669	46.5923	2.7500	14.7623	477.2842	477.2842	0.0000	0.0200		
6	48.5669	47.5922	2.7500	14.7723	477.3797	477.3797	0.0000	0.0200		
6	49.5669	48.5922	2.7500	14.7823	477.4752	477.4752	0.0000	0.0200		
6	50.5669	49.5921	2.7500	14.7923	477.5707	477.5707	0.0000	0.0200		
6	51.5669	50.5921	2.7500	14.8023	477.6662	477.6662	0.0000	0.0200		
6	52.5669	51.5920	2.7500	14.8123	477.7617	477.7617	0.0000	0.0200		
6	53.5669	52.5920	2.7500	14.8223	477.8573	477.8573	0.0000	0.0200		
6	54.5669	53.5919	2.7500	14.8323	477.9529	477.9529	0.0000	0.0200		
6	55.5669	54.5919	2.7500	14.8423	478.0485	478.0485	0.0000	0.0200		
6	56.5669	55.5918	2.7500	14.8523	478.1441	478.1441	0.0000	0.0200		
6	57.5669	56.5918	2.7500	14.8623	478.2397	478.2397	0.0000	0.0200		
6	58.5669	57.5917	2.7500	14.8723	478.3354	478.3354	0.0000	0.0200		
6	59.5669	58.5917	2.7500	14.8823	478.4311	478.4311	0.0000	0.0200		
6	60.5669	59.5916	2.7500	14.8923	478.5268	478.5268	0.0000	0.0200		
6	61.5669	60.5916	2.7500	14.9023	478.6225	478.6225	0.0000	0.0200		

TENDON Full Length - Canopy C1-L, Calculations

Segment	Length (ft)	X (ft)	Y (ft)	Z (ft)	Force (kips)	Force after Anchor-Set (kips)	Angle Change (deg)	Force Loss (%)	Containing Element	Additional Info.
6	62.5669	61.5915	2.7500	14.9122	478.7182	478.7182	0.0000	0.0200		
6	63.5669	62.5915	2.7500	14.9222	478.8140	478.8140	0.0000	0.0200		
6	64.5669	63.5914	2.7500	14.9322	478.9097	478.9097	0.0000	0.0200		
6	65.5669	64.5914	2.7500	14.9422	479.0055	479.0055	0.0000	0.0200		
6	66.5669	65.5913	2.7500	14.9522	479.1013	479.1013	0.0000	0.0200		
6	67.5669	66.5913	2.7500	14.9622	479.1972	479.1972	0.0000	0.0200		
6	68.5669	67.5912	2.7500	14.9722	479.2930	479.2930	0.0000	0.0200		
6	69.5669	68.5912	2.7500	14.9822	479.3889	479.3889	0.0000	0.0200		
6	70.5669	69.5911	2.7500	14.9922	479.4848	479.4848	0.0000	0.0200		
6	71.5669	70.5911	2.7500	15.0022	479.5807	479.5807	0.0000	0.0200		
6	72.5669	71.5910	2.7500	15.0122	479.6766	479.6766	0.0000	0.0200		
6	73.5669	72.5910	2.7500	15.0222	479.7725	479.7725	0.0000	0.0200		
6	74.5669	73.5909	2.7500	15.0322	479.8685	479.8685	0.0000	0.0200		
6	75.5669	74.5909	2.7500	15.0422	479.9645	479.9645	0.0000	0.0200		
6	76.5669	75.5908	2.7500	15.0522	480.0605	480.0605	0.0000	0.0200		
6	77.5669	76.5908	2.7500	15.0622	480.1565	480.1565	0.0000	0.0200		
6	78.5669	77.5907	2.7500	15.0722	480.2526	480.2526	0.0000	0.0200		
6	79.5669	78.5907	2.7500	15.0822	480.3486	480.3486	0.0000	0.0200		
6	80.5669	79.5906	2.7500	15.0922	480.4447	480.4447	0.0000	0.0200		
6	81.5669	80.5906	2.7500	15.1021	480.5408	480.5408	0.0000	0.0200		
6	82.5669	81.5905	2.7500	15.1121	480.6369	480.6369	0.0000	0.0200		
6	83.5669	82.5905	2.7500	15.1221	480.7330	480.7330	0.0000	0.0200		
6	84.5669	83.5904	2.7500	15.1321	480.8292	480.8292	0.0000	0.0200		
6	85.5669	84.5904	2.7500	15.1421	480.9254	480.9254	0.0000	0.0200		
6	86.5669	85.5903	2.7500	15.1521	481.0216	481.0216	0.0000	0.0200		
6	87.5669	86.5903	2.7500	15.1621	481.1178	481.1178	0.0000	0.0200		
6	88.5669	87.5902	2.7500	15.1721	481.2140	481.2140	0.0000	0.0200		
6	89.5669	88.5902	2.7500	15.1821	481.3103	481.3103	0.0000	0.0200		
6	90.5669	89.5901	2.7500	15.1921	481.4065	481.4065	0.0000	0.0200		
6	91.5669	90.5901	2.7500	15.2021	481.5028	481.5028	0.0000	0.0200		
6	92.5669	91.5900	2.7500	15.2121	481.5991	481.5991	0.0000	0.0200		
6	93.5669	92.5900	2.7500	15.2221	481.6955	481.6955	0.0000	0.0200		
6	94.5669	93.5899	2.7500	15.2321	481.7918	481.7918	0.0000	0.0200		
6	95.5669	94.5899	2.7500	15.2421	481.8882	481.8882	0.0000	0.0200		

TENDON Full Length - Canopy C1-L, Calculations

Segment	Length (ft)	X (ft)	Y (ft)	Z (ft)	Force (kips)	Force after Anchor-Set (kips)	Angle Change (deg)	Force Loss (%)	Containing Element	Additional Info.
6	96.5669	95.5898	2.7500	15.2521	481.9846	481.9846	0.0000	0.0200		
6	97.5669	96.5898	2.7500	15.2621	482.0810	482.0810	0.0000	0.0200		
6	98.5669	97.5897	2.7500	15.2721	482.1774	482.1774	0.0000	0.0200		
6	99.5669	98.5897	2.7500	15.2821	482.2739	482.2739	0.0000	0.0200		
6	100.5669	99.5896	2.7500	15.2921	482.3703	482.3703	0.0000	0.0200		
6	101.5669	100.5896	2.7500	15.3020	482.4668	482.4668	0.0000	0.0200		
6	102.5669	101.5895	2.7500	15.3120	482.5633	482.5633	0.0000	0.0200		
6	103.5669	102.5895	2.7500	15.3220	482.6598	482.6598	0.0000	0.0200		
6	104.5669	103.5894	2.7500	15.3320	482.7564	482.7564	0.0000	0.0200		
6	105.5669	104.5894	2.7500	15.3420	482.8529	482.8529	0.0000	0.0200		
6	106.5669	105.5893	2.7500	15.3520	482.9495	482.9495	0.0000	0.0200		
6	107.5669	106.5893	2.7500	15.3620	483.0461	483.0461	0.0000	0.0200		
6	108.5669	107.5892	2.7500	15.3720	483.1427	483.1427	0.0000	0.0200		
6	109.5669	108.5892	2.7500	15.3820	483.2394	483.2394	0.0000	0.0200		
6	110.5669	109.5891	2.7500	15.3920	483.3360	483.3360	0.0000	0.0200		
6	111.5669	110.5891	2.7500	15.4020	483.4327	483.4327	0.0000	0.0200		
6	112.5669	111.5890	2.7500	15.4120	483.5294	483.5294	0.0000	0.0200		
6	113.5669	112.5890	2.7500	15.4220	483.6261	483.6261	0.0000	0.0200		
6	114.5669	113.5889	2.7500	15.4320	483.7229	483.7229	0.0000	0.0200		
6	115.5669	114.5889	2.7500	15.4420	483.8196	483.8196	0.0000	0.0200		
6	116.5669	115.5888	2.7500	15.4520	483.9164	483.9164	0.0000	0.0200		
6	117.5669	116.5888	2.7500	15.4620	484.0132	484.0132	0.0000	0.0200		
6	118.5669	117.5887	2.7500	15.4720	484.1100	484.1100	0.0000	0.0200		
6	119.5669	118.5887	2.7500	15.4820	484.2068	484.2068	0.0000	0.0200		
6	120.5669	119.5886	2.7500	15.4920	484.3037	484.3037	0.0000	0.0200		
6	121.5669	120.5886	2.7500	15.5019	484.4005	484.4005	0.0000	0.0200		
6	122.5669	121.5885	2.7500	15.5119	484.4974	484.4974	0.0000	0.0200		
6	123.5669	122.5885	2.7500	15.5219	484.5943	484.5943	0.0000	0.0200		
6	124.5669	123.5884	2.7500	15.5319	484.6913	484.6913	0.0000	0.0200		
6	125.5669	124.5884	2.7500	15.5419	484.7882	484.7882	0.0000	0.0200		
6	126.5669	125.5883	2.7500	15.5519	484.8852	484.8852	0.0000	0.0200		
6	127.5669	126.5883	2.7500	15.5619	484.9822	484.9822	0.0000	0.0200		
6	128.5669	127.5882	2.7500	15.5719	485.0792	485.0792	0.0000	0.0200		
6	129.5669	128.5882	2.7500	15.5819	485.1762	485.1762	0.0000	0.0200		

TENDON Full Length - Canopy C1-L, Calculations

Segment	Length (ft)	X (ft)	Y (ft)	Z (ft)	Force (kips)	Force after Anchor-Set (kips)	Angle Change (deg)	Force Loss (%)	Containing Element	Additional Info.
6	130.5669	129.5881	2.7500	15.5919	485.2732	485.2732	0.0000	0.0200		
6	131.5669	130.5881	2.7500	15.6019	485.3703	485.3703	0.0000	0.0200		
6	132.5669	131.5880	2.7500	15.6119	485.4674	485.4674	0.0000	0.0200		
6	133.5669	132.5880	2.7500	15.6219	485.5645	485.5645	0.0000	0.0200		
6	134.5669	133.5879	2.7500	15.6319	485.6616	485.6616	0.0000	0.0200		
6	135.5669	134.5879	2.7500	15.6419	485.7588	485.7588	0.0000	0.0200		
6	136.5669	135.5878	2.7500	15.6519	485.8559	485.8559	0.0000	0.0200		
6	137.5669	136.5878	2.7500	15.6619	485.9531	485.9531	0.0000	0.0200		
6	138.5669	137.5877	2.7500	15.6719	486.0503	486.0503	0.0000	0.0200		
6	139.5669	138.5877	2.7500	15.6819	486.1475	486.1475	0.0000	0.0200		
6	140.5669	139.5876	2.7500	15.6919	486.2448	486.2448	0.0000	0.0200		
6	141.5669	140.5876	2.7500	15.7018	486.3420	486.3420	0.0000	0.0200		
6	142.5669	141.5875	2.7500	15.7118	486.4393	486.4393	0.0000	0.0200		
6	143.5669	142.5875	2.7500	15.7218	486.5366	486.5366	0.0000	0.0200		
6	144.5669	143.5874	2.7500	15.7318	486.6339	486.6339	0.0000	0.0200		
6	145.5669	144.5874	2.7500	15.7418	486.7313	486.7313	0.0000	0.0200		
6	146.5669	145.5873	2.7500	15.7518	486.8286	486.8286	0.0000	0.0200		
6	147.5669	146.5873	2.7500	15.7618	486.9260	486.9260	0.0000	0.0200		
6	148.5669	147.5872	2.7500	15.7718	487.0234	487.0234	0.0000	0.0200		
6	149.5669	148.5872	2.7500	15.7818	487.1208	487.1208	0.0000	0.0200		
6	150.5669	149.5871	2.7500	15.7918	487.2182	487.2182	0.0000	0.0200		
6	151.5669	150.5871	2.7500	15.8018	487.3157	487.3157	0.0000	0.0200		
6	152.5669	151.5870	2.7500	15.8118	487.4132	487.4132	0.0000	0.0200		
6	153.5669	152.5870	2.7500	15.8218	487.5106	487.5106	0.0000	0.0200		
6	154.5669	153.5869	2.7500	15.8318	487.6082	487.6082	0.0000	0.0200		
6	155.5669	154.5869	2.7500	15.8418	487.7057	487.7057	0.0000	0.0200		
6	156.5669	155.5868	2.7500	15.8518	487.8032	487.8032	0.0000	0.0200		
6	157.5669	156.5868	2.7500	15.8618	487.9008	487.9008	0.0000	0.0200		
6	158.5669	157.5867	2.7500	15.8718	487.9984	487.9984	0.0000	0.0200		
6	159.5669	158.5867	2.7500	15.8818	488.0960	488.0960	0.0000	0.0200		
6	160.5669	159.5866	2.7500	15.8917	488.1936	488.1936	0.0000	0.0200		
6	161.5669	160.5866	2.7500	15.9017	488.2913	488.2913	0.0000	0.0200		
6	162.5669	161.5865	2.7500	15.9117	488.3890	488.3890	0.0000	0.0200		
6	163.5669	162.5865	2.7500	15.9217	488.4866	488.4866	0.0000	0.0200		

TENDON Full Length - Canopy C1-L, Calculations

Segment	Length (ft)	X (ft)	Y (ft)	Z (ft)	Force (kips)	Force after Anchor-Set (kips)	Angle Change (deg)	Force Loss (%)	Containing Element	Additional Info.
6	164.5669	163.5864	2.7500	15.9317	488.5843	488.5843	0.0000	0.0200		
6	165.5669	164.5864	2.7500	15.9417	488.6821	488.6821	0.0000	0.0200		
6	166.5669	165.5863	2.7500	15.9517	488.7798	488.7798	0.0000	0.0200		
6	167.5669	166.5863	2.7500	15.9617	488.8776	488.8776	0.0000	0.0200		
6	168.5669	167.5862	2.7500	15.9717	488.9754	488.9754	0.0000	0.0200		
6	169.5669	168.5862	2.7500	15.9817	489.0732	489.0732	0.0000	0.0200		
6	170.5669	169.5861	2.7500	15.9917	489.1710	489.1710	0.0000	0.0200		
6	171.5669	170.5861	2.7500	16.0017	489.2688	489.1087	0.0000	0.0200		
6	172.5669	171.5860	2.7500	16.0117	489.3667	489.0109	0.0000	0.0200		
6	173.5669	172.5860	2.7500	16.0217	489.4646	488.9130	0.0000	0.0200		
6	174.5669	173.5859	2.7500	16.0317	489.5625	488.8151	0.0000	0.0200		
6	175.5669	174.5859	2.7500	16.0417	489.6604	488.7171	0.0000	0.0200		
6	176.5669	175.5858	2.7500	16.0517	489.7584	488.6192	0.0000	0.0200		
6	177.5669	176.5858	2.7500	16.0617	489.8563	488.5212	0.0000	0.0200		
6	178.5669	177.5857	2.7500	16.0717	489.9543	488.4233	0.0000	0.0200		
6	179.5669	178.5857	2.7500	16.0817	490.0523	488.3253	0.0000	0.0200		
6	180.5669	179.5856	2.7500	16.0916	490.1503	488.2272	0.0000	0.0200		
6	181.5669	180.5856	2.7500	16.1016	490.2484	488.1292	0.0000	0.0200		
6	182.5669	181.5855	2.7500	16.1116	490.3464	488.0311	0.0000	0.0200		
6	183.5669	182.5855	2.7500	16.1216	490.4445	487.9331	0.0000	0.0200		
6	184.5669	183.5854	2.7500	16.1316	490.5426	487.8350	0.0000	0.0200		
6	185.5669	184.5854	2.7500	16.1416	490.6407	487.7368	0.0000	0.0200		
6	186.5669	185.5853	2.7500	16.1516	490.7389	487.6387	0.0000	0.0200		
6	187.5669	186.5853	2.7500	16.1616	490.8370	487.5405	0.0000	0.0200		
6	188.5669	187.5852	2.7500	16.1716	490.9352	487.4424	0.0000	0.0200		
6	189.5669	188.5852	2.7500	16.1816	491.0334	487.3442	0.0000	0.0200		
6	190.5669	189.5851	2.7500	16.1916	491.1316	487.2460	0.0000	0.0200		
6	191.5669	190.5851	2.7500	16.2016	491.2298	487.1477	0.0000	0.0200		
6	192.5669	191.5850	2.7500	16.2116	491.3281	487.0495	0.0000	0.0200		
6	193.5669	192.5850	2.7500	16.2216	491.4264	486.9512	0.0000	0.0200		
6	194.5669	193.5849	2.7500	16.2316	491.5247	486.8529	0.0000	0.0200		
6	195.5669	194.5849	2.7500	16.2416	491.6230	486.7546	0.0000	0.0200		
6	196.5669	195.5848	2.7500	16.2516	491.7213	486.6562	0.0000	0.0200		
6	197.5669	196.5848	2.7500	16.2616	491.8197	486.5579	0.0000	0.0200		

TENDON Full Length - Canopy C1-L, Calculations

Segment	Length (ft)	X (ft)	Y (ft)	Z (ft)	Force (kips)	Force after Anchor-Set (kips)	Angle Change (deg)	Force Loss (%)	Containing Element	Additional Info.
6	198.5669	197.5847	2.7500	16.2716	491.9180	486.4595	0.0000	0.0200		
6	199.5669	198.5847	2.7500	16.2816	492.0164	486.3611	0.0000	0.0200		
6	200.5669	199.5846	2.7500	16.2915	492.1149	486.2627	0.0000	0.0200		
6	201.5669	200.5846	2.7500	16.3015	492.2133	486.1643	0.0000	0.0200		
6	202.5669	201.5845	2.7500	16.3115	492.3117	486.0658	0.0000	0.0200		
6	203.5669	202.5845	2.7500	16.3215	492.4102	485.9674	0.0000	0.0200		
6	204.5669	203.5844	2.7500	16.3315	492.5087	485.8689	0.0000	0.0200		
6	205.5669	204.5844	2.7500	16.3415	492.6072	485.7703	0.0000	0.0200		
6	206.5669	205.5843	2.7500	16.3515	492.7057	485.6718	0.0000	0.0200		
6	207.5669	206.5843	2.7500	16.3615	492.8043	485.5733	0.0000	0.0200		
6	208.5669	207.5842	2.7500	16.3715	492.9029	485.4747	0.0000	0.0200		
6	209.5669	208.5842	2.7500	16.3815	493.0015	485.3761	0.0000	0.0200		
6	210.5669	209.5841	2.7500	16.3915	493.1001	485.2775	0.0000	0.0200		
6	211.5669	210.5841	2.7500	16.4015	493.1987	485.1789	0.0000	0.0200		
6	212.5669	211.5840	2.7500	16.4115	493.2973	485.0802	0.0000	0.0200		
6	213.5669	212.5840	2.7500	16.4215	493.3960	484.9815	0.0000	0.0200		
6	214.5669	213.5839	2.7500	16.4315	493.4947	484.8829	0.0000	0.0200		
6	215.5669	214.5839	2.7500	16.4415	493.5934	484.7841	0.0000	0.0200		
6	216.5669	215.5838	2.7500	16.4515	493.6921	484.6854	0.0000	0.0200		
6	217.5669	216.5838	2.7500	16.4615	493.7909	484.5867	0.0000	0.0200		
6	218.5669	217.5837	2.7500	16.4715	493.8897	484.4879	0.0000	0.0200		
6	219.5669	218.5837	2.7500	16.4814	493.9884	484.3891	0.0000	0.0200		
6	220.5669	219.5836	2.7500	16.4914	494.0873	484.2903	0.0000	0.0200		
6	221.5669	220.5836	2.7500	16.5014	494.1861	484.1915	0.0000	0.0200		
6	222.5669	221.5835	2.7500	16.5114	494.2849	484.0926	0.0000	0.0200		
6	223.5669	222.5835	2.7500	16.5214	494.3838	483.9938	0.0000	0.0200		
6	224.5669	223.5834	2.7500	16.5314	494.4827	483.8949	0.0000	0.0200		
6	225.5669	224.5834	2.7500	16.5414	494.5816	483.7960	0.0000	0.0200		
6	226.5669	225.5833	2.7500	16.5514	494.6805	483.6970	0.0000	0.0200		
6	227.5669	226.5833	2.7500	16.5614	494.7795	483.5981	0.0000	0.0200		
6	228.5669	227.5832	2.7500	16.5714	494.8784	483.4991	0.0000	0.0200		
6	229.5669	228.5832	2.7500	16.5814	494.9774	483.4002	0.0000	0.0200		
6	230.5669	229.5831	2.7500	16.5914	495.0764	483.3011	0.0000	0.0200		
6	231.5669	230.5831	2.7500	16.6014	495.1754	483.2021	0.0000	0.0200		

TENDON Full Length - Canopy C1-L, Calculations

Segment	Length (ft)	X (ft)	Y (ft)	Z (ft)	Force (kips)	Force after Anchor-Set (kips)	Angle Change (deg)	Force Loss (%)	Containing Element	Additional Info.
6	232.5669	231.5830	2.7500	16.6114	495.2745	483.1031	0.0000	0.0200		
6	233.5669	232.5830	2.7500	16.6214	495.3736	483.0040	0.0000	0.0200		
6	234.5669	233.5829	2.7500	16.6314	495.4726	482.9049	0.0000	0.0200		
6	235.5669	234.5829	2.7500	16.6414	495.5717	482.8058	0.0000	0.0200		
6	236.5669	235.5828	2.7500	16.6514	495.6709	482.7067	0.0000	0.0200		
6	237.5669	236.5828	2.7500	16.6614	495.7700	482.6076	0.0000	0.0200		
6	238.5669	237.5827	2.7500	16.6714	495.8692	482.5084	0.0000	0.0200		
6	239.5669	238.5827	2.7500	16.6813	495.9684	482.4092	0.0000	0.0200		
6	240.5669	239.5826	2.7500	16.6913	496.0676	482.3100	0.0000	0.0200		
6	241.5669	240.5826	2.7500	16.7013	496.1668	482.2108	0.0000	0.0200		
6	242.5669	241.5825	2.7500	16.7113	496.2660	482.1115	0.0000	0.0200		
6	243.5669	242.5825	2.7500	16.7213	496.3653	482.0123	0.0000	0.0200		
6	244.5669	243.5824	2.7500	16.7313	496.4646	481.9130	0.0000	0.0200		
6	245.5669	244.5824	2.7500	16.7413	496.5639	481.8137	0.0000	0.0200		
6	246.5669	245.5823	2.7500	16.7513	496.6632	481.7144	0.0000	0.0200		
6	247.5669	246.5823	2.7500	16.7613	496.7625	481.6150	0.0000	0.0200		
6	248.5669	247.5822	2.7500	16.7713	496.8619	481.5157	0.0000	0.0200		
6	249.5669	248.5822	2.7500	16.7813	496.9613	481.4163	0.0000	0.0200		
6	250.5669	249.5821	2.7500	16.7913	497.0607	481.3169	0.0000	0.0200		
6	251.5669	250.5821	2.7500	16.8013	497.1601	481.2175	0.0000	0.0184		
6	252.4857	251.5008	2.7500	16.8105	497.2515	481.1261	9.0832	3.9050		
8	253.4857	252.4881	2.5927	16.8339	517.4583	460.9192	0.0000	0.0200		
8	254.4857	253.4754	2.4354	16.8573	517.5618	460.8157	0.0000	0.0200		
8	255.4857	254.4627	2.2781	16.8807	517.6654	460.7122	0.0000	0.0200		
8	256.4857	255.4499	2.1208	16.9041	517.7689	460.6086	0.0000	0.0200		
8	257.4857	256.4372	1.9636	16.9275	517.8725	460.5051	0.0000	0.0200		
8	258.4857	257.4245	1.8063	16.9509	517.9761	460.4015	0.0000	0.0200		
8	259.4857	258.4118	1.6490	16.9743	518.0797	460.2979	0.0000	0.0200		
8	260.4857	259.3990	1.4917	16.9977	518.1833	460.1943	0.0000	0.0200		
8	261.4857	260.3863	1.3344	17.0211	518.2869	460.0906	0.0000	0.0200		
8	262.4857	261.3736	1.1771	17.0445	518.3906	459.9870	0.0000	0.0013		
8	262.5522	261.4392	1.1667	17.0461	518.3975	459.9801	9.0832	3.9050		
8-9	263.5522	262.4392	1.1667	17.0561	539.4637	438.9139	0.0000	0.0200		
8-9	264.5522	263.4391	1.1667	17.0661	539.5716	438.8060	0.0000	0.0200		

TENDON Full Length - Canopy C1-L, Calculations

Segment	Length (ft)	X (ft)	Y (ft)	Z (ft)	Force (kips)	Force after Anchor-Set (kips)	Angle Change (deg)	Force Loss (%)	Containing Element	Additional Info.
8-9	265.5522	264.4391	1.1667	17.0761	539.6795	438.6981	0.0000	0.0200		
8-9	266.5522	265.4390	1.1667	17.0861	539.7874	438.5901	0.0000	0.0200		
8-9	267.5522	266.4390	1.1667	17.0961	539.8954	438.4822	0.0000	0.0200		
8-9	268.5522	267.4389	1.1667	17.1061	540.0034	438.3742	0.0000	0.0200		
8-9	269.5522	268.4389	1.1667	17.1161	540.1114	438.2662	0.0000	0.0045		
9	269.7756	268.6622	1.1667	17.1183	540.1355	438.2420	1.5921	0.7088		
9	270.6091	269.4951	1.1667	17.1498	543.9914	434.3861	3.1841	1.3962		
9	271.4426	270.3250	1.1667	17.2275	551.6940	426.6836	1.5921	0.7051		
10	272.0872	270.9649	1.1667	17.3054	555.6114	422.7661	0.0000	0.0129		
10	272.7317	271.6047	1.1667	17.3833	555.6831	422.6945	0.0000	0.0045		
10	272.9560	271.8273	1.1667	17.4104	555.7080	422.6696	0.0000	0.0000		

TENDON Full Length - Canopy C1-R, Calculations

Segment	Length (ft)	X (ft)	Y (ft)	Z (ft)	Force (kips)	Force after Anchor-Set (kips)	Angle Change (deg)	Force Loss (%)
1	0.0000	-0.8394	-1.1667	14.6837	425.2846	425.2846	0.0000	0.0200
1-2	1.0000	0.1555	-1.1667	14.5827	425.3697	425.3697	0.0000	0.0103
2	1.5135	0.6663	-1.1667	14.5309	425.4133	425.4133	1.5920	0.7088
2	2.3469	1.4975	-1.1667	14.4698	428.4502	428.4502	3.1840	1.3961
2	3.1804	2.3309	-1.1667	14.4550	434.5166	434.5166	1.5920	0.7100
3	4.0761	3.2265	-1.1667	14.4639	437.6238	437.6238	0.0000	0.0179
3	4.9718	4.1222	-1.1667	14.4729	437.7022	437.7022	0.0000	0.0179
3	5.8675	5.0178	-1.1667	14.4818	437.7806	437.7806	0.0000	0.0179
3	6.7632	5.9135	-1.1667	14.4908	437.8591	437.8591	0.0000	0.0179
3	7.6589	6.8091	-1.1667	14.4998	437.9375	437.9375	0.0000	0.0179
3	8.5546	7.7048	-1.1667	14.5087	438.0160	438.0160	0.0000	0.0179
3	9.4503	8.6004	-1.1667	14.5177	438.0944	438.0944	0.0000	0.0179
3	10.3460	9.4961	-1.1667	14.5266	438.1729	438.1729	0.0000	0.0000
3	10.3461	9.4962	-1.1667	14.5266	438.1729	438.1729	8.9444	3.8468
4	11.3461	10.4841	-1.3216	14.5233	455.7028	455.7028	0.0000	0.0200
4	12.3461	11.4721	-1.4765	14.5199	455.7940	455.7940	0.0000	0.0200
4	13.3461	12.4600	-1.6314	14.5166	455.8851	455.8851	0.0000	0.0200
4	14.3461	13.4479	-1.7863	14.5133	455.9763	455.9763	0.0000	0.0200

TENDON Full Length - Canopy C1-R, Calculations

Segment	Length (ft)	X (ft)	Y (ft)	Z (ft)	Force (kips)	Force after Anchor-Set (kips)	Angle Change (deg)	Force Loss (%)	Containing Element	Additional Info.
4	15.3461	14.4358	-1.9412	14.5099	456.0675	456.0675	0.0000	0.0200		
4	16.3461	15.4237	-2.0961	14.5066	456.1587	456.1587	0.0000	0.0200		
4	17.3461	16.4117	-2.2511	14.5032	456.2500	456.2500	0.0000	0.0200		
4	18.3461	17.3996	-2.4060	14.4999	456.3412	456.3412	0.0000	0.0200		
4	19.3461	18.3875	-2.5609	14.4965	456.4325	456.4325	0.0000	0.0200		
4	20.3461	19.3754	-2.7158	14.4932	456.5238	456.5238	0.0000	0.0044		
4	20.5669	19.5936	-2.7500	14.4925	456.5440	456.5440	8.9443	3.8468		
6	21.5669	20.5936	-2.7500	14.5025	474.8088	474.8088	0.0000	0.0200		
6	22.5669	21.5935	-2.7500	14.5124	474.9037	474.9037	0.0000	0.0200		
6	23.5669	22.5935	-2.7500	14.5224	474.9987	474.9987	0.0000	0.0200		
6	24.5669	23.5934	-2.7500	14.5324	475.0937	475.0937	0.0000	0.0200		
6	25.5669	24.5934	-2.7500	14.5424	475.1888	475.1888	0.0000	0.0200		
6	26.5669	25.5933	-2.7500	14.5524	475.2838	475.2838	0.0000	0.0200		
6	27.5669	26.5933	-2.7500	14.5624	475.3789	475.3789	0.0000	0.0200		
6	28.5669	27.5932	-2.7500	14.5724	475.4740	475.4740	0.0000	0.0200		
6	29.5669	28.5932	-2.7500	14.5824	475.5691	475.5691	0.0000	0.0200		
6	30.5669	29.5931	-2.7500	14.5924	475.6642	475.6642	0.0000	0.0200		
6	31.5669	30.5931	-2.7500	14.6024	475.7593	475.7593	0.0000	0.0200		
6	32.5669	31.5930	-2.7500	14.6124	475.8545	475.8545	0.0000	0.0200		
6	33.5669	32.5930	-2.7500	14.6224	475.9497	475.9497	0.0000	0.0200		
6	34.5669	33.5929	-2.7500	14.6324	476.0449	476.0449	0.0000	0.0200		
6	35.5669	34.5929	-2.7500	14.6424	476.1401	476.1401	0.0000	0.0200		
6	36.5669	35.5928	-2.7500	14.6524	476.2353	476.2353	0.0000	0.0200		
6	37.5669	36.5928	-2.7500	14.6624	476.3306	476.3306	0.0000	0.0200		
6	38.5669	37.5927	-2.7500	14.6724	476.4259	476.4259	0.0000	0.0200		
6	39.5669	38.5927	-2.7500	14.6824	476.5212	476.5212	0.0000	0.0200		
6	40.5669	39.5926	-2.7500	14.6924	476.6165	476.6165	0.0000	0.0200		
6	41.5669	40.5926	-2.7500	14.7024	476.7118	476.7118	0.0000	0.0200		
6	42.5669	41.5925	-2.7500	14.7123	476.8072	476.8072	0.0000	0.0200		
6	43.5669	42.5925	-2.7500	14.7223	476.9025	476.9025	0.0000	0.0200		
6	44.5669	43.5924	-2.7500	14.7323	476.9979	476.9979	0.0000	0.0200		
6	45.5669	44.5924	-2.7500	14.7423	477.0933	477.0933	0.0000	0.0200		
6	46.5669	45.5923	-2.7500	14.7523	477.1888	477.1888	0.0000	0.0200		
6	47.5669	46.5923	-2.7500	14.7623	477.2842	477.2842	0.0000	0.0200		

TENDON Full Length - Canopy C1-R, Calculations

Segment	Length (ft)	X (ft)	Y (ft)	Z (ft)	Force (kips)	Force after Anchor-Set (kips)	Angle Change (deg)	Force Loss (%)	Containing Element	Additional Info.
6	48.5669	47.5922	-2.7500	14.7723	477.3797	477.3797	0.0000	0.0200		
6	49.5669	48.5922	-2.7500	14.7823	477.4752	477.4752	0.0000	0.0200		
6	50.5669	49.5921	-2.7500	14.7923	477.5707	477.5707	0.0000	0.0200		
6	51.5669	50.5921	-2.7500	14.8023	477.6662	477.6662	0.0000	0.0200		
6	52.5669	51.5920	-2.7500	14.8123	477.7617	477.7617	0.0000	0.0200		
6	53.5669	52.5920	-2.7500	14.8223	477.8573	477.8573	0.0000	0.0200		
6	54.5669	53.5919	-2.7500	14.8323	477.9529	477.9529	0.0000	0.0200		
6	55.5669	54.5919	-2.7500	14.8423	478.0485	478.0485	0.0000	0.0200		
6	56.5669	55.5918	-2.7500	14.8523	478.1441	478.1441	0.0000	0.0200		
6	57.5669	56.5918	-2.7500	14.8623	478.2397	478.2397	0.0000	0.0200		
6	58.5669	57.5917	-2.7500	14.8723	478.3354	478.3354	0.0000	0.0200		
6	59.5669	58.5917	-2.7500	14.8823	478.4311	478.4311	0.0000	0.0200		
6	60.5669	59.5916	-2.7500	14.8923	478.5268	478.5268	0.0000	0.0200		
6	61.5669	60.5916	-2.7500	14.9023	478.6225	478.6225	0.0000	0.0200		
6	62.5669	61.5915	-2.7500	14.9122	478.7182	478.7182	0.0000	0.0200		
6	63.5669	62.5915	-2.7500	14.9222	478.8140	478.8140	0.0000	0.0200		
6	64.5669	63.5914	-2.7500	14.9322	478.9097	478.9097	0.0000	0.0200		
6	65.5669	64.5914	-2.7500	14.9422	479.0055	479.0055	0.0000	0.0200		
6	66.5669	65.5913	-2.7500	14.9522	479.1013	479.1013	0.0000	0.0200		
6	67.5669	66.5913	-2.7500	14.9622	479.1972	479.1972	0.0000	0.0200		
6	68.5669	67.5912	-2.7500	14.9722	479.2930	479.2930	0.0000	0.0200		
6	69.5669	68.5912	-2.7500	14.9822	479.3889	479.3889	0.0000	0.0200		
6	70.5669	69.5911	-2.7500	14.9922	479.4848	479.4848	0.0000	0.0200		
6	71.5669	70.5911	-2.7500	15.0022	479.5807	479.5807	0.0000	0.0200		
6	72.5669	71.5910	-2.7500	15.0122	479.6766	479.6766	0.0000	0.0200		
6	73.5669	72.5910	-2.7500	15.0222	479.7725	479.7725	0.0000	0.0200		
6	74.5669	73.5909	-2.7500	15.0322	479.8685	479.8685	0.0000	0.0200		
6	75.5669	74.5909	-2.7500	15.0422	479.9645	479.9645	0.0000	0.0200		
6	76.5669	75.5908	-2.7500	15.0522	480.0605	480.0605	0.0000	0.0200		
6	77.5669	76.5908	-2.7500	15.0622	480.1565	480.1565	0.0000	0.0200		
6	78.5669	77.5907	-2.7500	15.0722	480.2526	480.2526	0.0000	0.0200		
6	79.5669	78.5907	-2.7500	15.0822	480.3486	480.3486	0.0000	0.0200		
6	80.5669	79.5906	-2.7500	15.0922	480.4447	480.4447	0.0000	0.0200		
6	81.5669	80.5906	-2.7500	15.1021	480.5408	480.5408	0.0000	0.0200		

TENDON Full Length - Canopy C1-R, Calculations

Segment	Length (ft)	X (ft)	Y (ft)	Z (ft)	Force (kips)	Force after Anchor-Set (kips)	Angle Change (deg)	Force Loss (%)	Containing Element	Additional Info.
6	82.5669	81.5905	-2.7500	15.1121	480.6369	480.6369	0.0000	0.0200		
6	83.5669	82.5905	-2.7500	15.1221	480.7330	480.7330	0.0000	0.0200		
6	84.5669	83.5904	-2.7500	15.1321	480.8292	480.8292	0.0000	0.0200		
6	85.5669	84.5904	-2.7500	15.1421	480.9254	480.9254	0.0000	0.0200		
6	86.5669	85.5903	-2.7500	15.1521	481.0216	481.0216	0.0000	0.0200		
6	87.5669	86.5903	-2.7500	15.1621	481.1178	481.1178	0.0000	0.0200		
6	88.5669	87.5902	-2.7500	15.1721	481.2140	481.2140	0.0000	0.0200		
6	89.5669	88.5902	-2.7500	15.1821	481.3103	481.3103	0.0000	0.0200		
6	90.5669	89.5901	-2.7500	15.1921	481.4065	481.4065	0.0000	0.0200		
6	91.5669	90.5901	-2.7500	15.2021	481.5028	481.5028	0.0000	0.0200		
6	92.5669	91.5900	-2.7500	15.2121	481.5991	481.5991	0.0000	0.0200		
6	93.5669	92.5900	-2.7500	15.2221	481.6955	481.6955	0.0000	0.0200		
6	94.5669	93.5899	-2.7500	15.2321	481.7918	481.7918	0.0000	0.0200		
6	95.5669	94.5899	-2.7500	15.2421	481.8882	481.8882	0.0000	0.0200		
6	96.5669	95.5898	-2.7500	15.2521	481.9846	481.9846	0.0000	0.0200		
6	97.5669	96.5898	-2.7500	15.2621	482.0810	482.0810	0.0000	0.0200		
6	98.5669	97.5897	-2.7500	15.2721	482.1774	482.1774	0.0000	0.0200		
6	99.5669	98.5897	-2.7500	15.2821	482.2739	482.2739	0.0000	0.0200		
6	100.5669	99.5896	-2.7500	15.2921	482.3703	482.3703	0.0000	0.0200		
6	101.5669	100.5896	-2.7500	15.3020	482.4668	482.4668	0.0000	0.0200		
6	102.5669	101.5895	-2.7500	15.3120	482.5633	482.5633	0.0000	0.0200		
6	103.5669	102.5895	-2.7500	15.3220	482.6598	482.6598	0.0000	0.0200		
6	104.5669	103.5894	-2.7500	15.3320	482.7564	482.7564	0.0000	0.0200		
6	105.5669	104.5894	-2.7500	15.3420	482.8529	482.8529	0.0000	0.0200		
6	106.5669	105.5893	-2.7500	15.3520	482.9495	482.9495	0.0000	0.0200		
6	107.5669	106.5893	-2.7500	15.3620	483.0461	483.0461	0.0000	0.0200		
6	108.5669	107.5892	-2.7500	15.3720	483.1427	483.1427	0.0000	0.0200		
6	109.5669	108.5892	-2.7500	15.3820	483.2394	483.2394	0.0000	0.0200		
6	110.5669	109.5891	-2.7500	15.3920	483.3360	483.3360	0.0000	0.0200		
6	111.5669	110.5891	-2.7500	15.4020	483.4327	483.4327	0.0000	0.0200		
6	112.5669	111.5890	-2.7500	15.4120	483.5294	483.5294	0.0000	0.0200		
6	113.5669	112.5890	-2.7500	15.4220	483.6261	483.6261	0.0000	0.0200		
6	114.5669	113.5889	-2.7500	15.4320	483.7229	483.7229	0.0000	0.0200		
6	115.5669	114.5889	-2.7500	15.4420	483.8196	483.8196	0.0000	0.0200		

TENDON Full Length - Canopy C1-R, Calculations

Segment	Length (ft)	X (ft)	Y (ft)	Z (ft)	Force (kips)	Force after Anchor-Set (kips)	Angle Change (deg)	Force Loss (%)	Containing Element	Additional Info.
6	116.5669	115.5888	-2.7500	15.4520	483.9164	483.9164	0.0000	0.0200		
6	117.5669	116.5888	-2.7500	15.4620	484.0132	484.0132	0.0000	0.0200		
6	118.5669	117.5887	-2.7500	15.4720	484.1100	484.1100	0.0000	0.0200		
6	119.5669	118.5887	-2.7500	15.4820	484.2068	484.2068	0.0000	0.0200		
6	120.5669	119.5886	-2.7500	15.4920	484.3037	484.3037	0.0000	0.0200		
6	121.5669	120.5886	-2.7500	15.5019	484.4005	484.4005	0.0000	0.0200		
6	122.5669	121.5885	-2.7500	15.5119	484.4974	484.4974	0.0000	0.0200		
6	123.5669	122.5885	-2.7500	15.5219	484.5943	484.5943	0.0000	0.0200		
6	124.5669	123.5884	-2.7500	15.5319	484.6913	484.6913	0.0000	0.0200		
6	125.5669	124.5884	-2.7500	15.5419	484.7882	484.7882	0.0000	0.0200		
6	126.5669	125.5883	-2.7500	15.5519	484.8852	484.8852	0.0000	0.0200		
6	127.5669	126.5883	-2.7500	15.5619	484.9822	484.9822	0.0000	0.0200		
6	128.5669	127.5882	-2.7500	15.5719	485.0792	485.0792	0.0000	0.0200		
6	129.5669	128.5882	-2.7500	15.5819	485.1762	485.1762	0.0000	0.0200		
6	130.5669	129.5881	-2.7500	15.5919	485.2732	485.2732	0.0000	0.0200		
6	131.5669	130.5881	-2.7500	15.6019	485.3703	485.3703	0.0000	0.0200		
6	132.5669	131.5880	-2.7500	15.6119	485.4674	485.4674	0.0000	0.0200		
6	133.5669	132.5880	-2.7500	15.6219	485.5645	485.5645	0.0000	0.0200		
6	134.5669	133.5879	-2.7500	15.6319	485.6616	485.6616	0.0000	0.0200		
6	135.5669	134.5879	-2.7500	15.6419	485.7588	485.7588	0.0000	0.0200		
6	136.5669	135.5878	-2.7500	15.6519	485.8559	485.8559	0.0000	0.0200		
6	137.5669	136.5878	-2.7500	15.6619	485.9531	485.9531	0.0000	0.0200		
6	138.5669	137.5877	-2.7500	15.6719	486.0503	486.0503	0.0000	0.0200		
6	139.5669	138.5877	-2.7500	15.6819	486.1475	486.1475	0.0000	0.0200		
6	140.5669	139.5876	-2.7500	15.6919	486.2448	486.2448	0.0000	0.0200		
6	141.5669	140.5876	-2.7500	15.7018	486.3420	486.3420	0.0000	0.0200		
6	142.5669	141.5875	-2.7500	15.7118	486.4393	486.4393	0.0000	0.0200		
6	143.5669	142.5875	-2.7500	15.7218	486.5366	486.5366	0.0000	0.0200		
6	144.5669	143.5874	-2.7500	15.7318	486.6339	486.6339	0.0000	0.0200		
6	145.5669	144.5874	-2.7500	15.7418	486.7313	486.7313	0.0000	0.0200		
6	146.5669	145.5873	-2.7500	15.7518	486.8286	486.8286	0.0000	0.0200		
6	147.5669	146.5873	-2.7500	15.7618	486.9260	486.9260	0.0000	0.0200		
6	148.5669	147.5872	-2.7500	15.7718	487.0234	487.0234	0.0000	0.0200		
6	149.5669	148.5872	-2.7500	15.7818	487.1208	487.1208	0.0000	0.0200		

TENDON Full Length - Canopy C1-R, Calculations

Segment	Length (ft)	X (ft)	Y (ft)	Z (ft)	Force (kips)	Force after Anchor-Set (kips)	Angle Change (deg)	Force Loss (%)	Containing Element	Additional Info.
6	150.5669	149.5871	-2.7500	15.7918	487.2182	487.2182	0.0000	0.0200		
6	151.5669	150.5871	-2.7500	15.8018	487.3157	487.3157	0.0000	0.0200		
6	152.5669	151.5870	-2.7500	15.8118	487.4132	487.4132	0.0000	0.0200		
6	153.5669	152.5870	-2.7500	15.8218	487.5106	487.5106	0.0000	0.0200		
6	154.5669	153.5869	-2.7500	15.8318	487.6082	487.6082	0.0000	0.0200		
6	155.5669	154.5869	-2.7500	15.8418	487.7057	487.7057	0.0000	0.0200		
6	156.5669	155.5868	-2.7500	15.8518	487.8032	487.8032	0.0000	0.0200		
6	157.5669	156.5868	-2.7500	15.8618	487.9008	487.9008	0.0000	0.0200		
6	158.5669	157.5867	-2.7500	15.8718	487.9984	487.9984	0.0000	0.0200		
6	159.5669	158.5867	-2.7500	15.8818	488.0960	488.0960	0.0000	0.0200		
6	160.5669	159.5866	-2.7500	15.8917	488.1936	488.1936	0.0000	0.0200		
6	161.5669	160.5866	-2.7500	15.9017	488.2913	488.2913	0.0000	0.0200		
6	162.5669	161.5865	-2.7500	15.9117	488.3890	488.3890	0.0000	0.0200		
6	163.5669	162.5865	-2.7500	15.9217	488.4866	488.4866	0.0000	0.0200		
6	164.5669	163.5864	-2.7500	15.9317	488.5843	488.5843	0.0000	0.0200		
6	165.5669	164.5864	-2.7500	15.9417	488.6821	488.6821	0.0000	0.0200		
6	166.5669	165.5863	-2.7500	15.9517	488.7798	488.7798	0.0000	0.0200		
6	167.5669	166.5863	-2.7500	15.9617	488.8776	488.8776	0.0000	0.0200		
6	168.5669	167.5862	-2.7500	15.9717	488.9754	488.9754	0.0000	0.0200		
6	169.5669	168.5862	-2.7500	15.9817	489.0732	489.0732	0.0000	0.0200		
6	170.5669	169.5861	-2.7500	15.9917	489.1710	489.1710	0.0000	0.0200		
6	171.5669	170.5861	-2.7500	16.0017	489.2688	489.1087	0.0000	0.0200		
6	172.5669	171.5860	-2.7500	16.0117	489.3667	489.0109	0.0000	0.0200		
6	173.5669	172.5860	-2.7500	16.0217	489.4646	488.9130	0.0000	0.0200		
6	174.5669	173.5859	-2.7500	16.0317	489.5625	488.8151	0.0000	0.0200		
6	175.5669	174.5859	-2.7500	16.0417	489.6604	488.7171	0.0000	0.0200		
6	176.5669	175.5858	-2.7500	16.0517	489.7584	488.6192	0.0000	0.0200		
6	177.5669	176.5858	-2.7500	16.0617	489.8563	488.5212	0.0000	0.0200		
6	178.5669	177.5857	-2.7500	16.0717	489.9543	488.4233	0.0000	0.0200		
6	179.5669	178.5857	-2.7500	16.0817	490.0523	488.3253	0.0000	0.0200		
6	180.5669	179.5856	-2.7500	16.0916	490.1503	488.2272	0.0000	0.0200		
6	181.5669	180.5856	-2.7500	16.1016	490.2484	488.1292	0.0000	0.0200		
6	182.5669	181.5855	-2.7500	16.1116	490.3464	488.0311	0.0000	0.0200		
6	183.5669	182.5855	-2.7500	16.1216	490.4445	487.9331	0.0000	0.0200		

TENDON Full Length - Canopy C1-R, Calculations

Segment	Length (ft)	X (ft)	Y (ft)	Z (ft)	Force (kips)	Force after Anchor-Set (kips)	Angle Change (deg)	Force Loss (%)	Containing Element	Additional Info.
6	184.5669	183.5854	-2.7500	16.1316	490.5426	487.8350	0.0000	0.0200		
6	185.5669	184.5854	-2.7500	16.1416	490.6407	487.7368	0.0000	0.0200		
6	186.5669	185.5853	-2.7500	16.1516	490.7389	487.6387	0.0000	0.0200		
6	187.5669	186.5853	-2.7500	16.1616	490.8370	487.5405	0.0000	0.0200		
6	188.5669	187.5852	-2.7500	16.1716	490.9352	487.4424	0.0000	0.0200		
6	189.5669	188.5852	-2.7500	16.1816	491.0334	487.3442	0.0000	0.0200		
6	190.5669	189.5851	-2.7500	16.1916	491.1316	487.2460	0.0000	0.0200		
6	191.5669	190.5851	-2.7500	16.2016	491.2298	487.1477	0.0000	0.0200		
6	192.5669	191.5850	-2.7500	16.2116	491.3281	487.0495	0.0000	0.0200		
6	193.5669	192.5850	-2.7500	16.2216	491.4264	486.9512	0.0000	0.0200		
6	194.5669	193.5849	-2.7500	16.2316	491.5247	486.8529	0.0000	0.0200		
6	195.5669	194.5849	-2.7500	16.2416	491.6230	486.7546	0.0000	0.0200		
6	196.5669	195.5848	-2.7500	16.2516	491.7213	486.6562	0.0000	0.0200		
6	197.5669	196.5848	-2.7500	16.2616	491.8197	486.5579	0.0000	0.0200		
6	198.5669	197.5847	-2.7500	16.2716	491.9180	486.4595	0.0000	0.0200		
6	199.5669	198.5847	-2.7500	16.2816	492.0164	486.3611	0.0000	0.0200		
6	200.5669	199.5846	-2.7500	16.2915	492.1149	486.2627	0.0000	0.0200		
6	201.5669	200.5846	-2.7500	16.3015	492.2133	486.1643	0.0000	0.0200		
6	202.5669	201.5845	-2.7500	16.3115	492.3117	486.0658	0.0000	0.0200		
6	203.5669	202.5845	-2.7500	16.3215	492.4102	485.9674	0.0000	0.0200		
6	204.5669	203.5844	-2.7500	16.3315	492.5087	485.8689	0.0000	0.0200		
6	205.5669	204.5844	-2.7500	16.3415	492.6072	485.7703	0.0000	0.0200		
6	206.5669	205.5843	-2.7500	16.3515	492.7057	485.6718	0.0000	0.0200		
6	207.5669	206.5843	-2.7500	16.3615	492.8043	485.5733	0.0000	0.0200		
6	208.5669	207.5842	-2.7500	16.3715	492.9029	485.4747	0.0000	0.0200		
6	209.5669	208.5842	-2.7500	16.3815	493.0015	485.3761	0.0000	0.0200		
6	210.5669	209.5841	-2.7500	16.3915	493.1001	485.2775	0.0000	0.0200		
6	211.5669	210.5841	-2.7500	16.4015	493.1987	485.1789	0.0000	0.0200		
6	212.5669	211.5840	-2.7500	16.4115	493.2973	485.0802	0.0000	0.0200		
6	213.5669	212.5840	-2.7500	16.4215	493.3960	484.9815	0.0000	0.0200		
6	214.5669	213.5839	-2.7500	16.4315	493.4947	484.8829	0.0000	0.0200		
6	215.5669	214.5839	-2.7500	16.4415	493.5934	484.7841	0.0000	0.0200		
6	216.5669	215.5838	-2.7500	16.4515	493.6921	484.6854	0.0000	0.0200		
6	217.5669	216.5838	-2.7500	16.4615	493.7909	484.5867	0.0000	0.0200		

TENDON Full Length - Canopy C1-R, Calculations

Segment	Length (ft)	X (ft)	Y (ft)	Z (ft)	Force (kips)	Force after Anchor-Set (kips)	Angle Change (deg)	Force Loss (%)	Containing Element	Additional Info.
6	218.5669	217.5837	-2.7500	16.4715	493.8897	484.4879	0.0000	0.0200		
6	219.5669	218.5837	-2.7500	16.4814	493.9884	484.3891	0.0000	0.0200		
6	220.5669	219.5836	-2.7500	16.4914	494.0873	484.2903	0.0000	0.0200		
6	221.5669	220.5836	-2.7500	16.5014	494.1861	484.1915	0.0000	0.0200		
6	222.5669	221.5835	-2.7500	16.5114	494.2849	484.0926	0.0000	0.0200		
6	223.5669	222.5835	-2.7500	16.5214	494.3838	483.9938	0.0000	0.0200		
6	224.5669	223.5834	-2.7500	16.5314	494.4827	483.8949	0.0000	0.0200		
6	225.5669	224.5834	-2.7500	16.5414	494.5816	483.7960	0.0000	0.0200		
6	226.5669	225.5833	-2.7500	16.5514	494.6805	483.6970	0.0000	0.0200		
6	227.5669	226.5833	-2.7500	16.5614	494.7795	483.5981	0.0000	0.0200		
6	228.5669	227.5832	-2.7500	16.5714	494.8784	483.4991	0.0000	0.0200		
6	229.5669	228.5832	-2.7500	16.5814	494.9774	483.4002	0.0000	0.0200		
6	230.5669	229.5831	-2.7500	16.5914	495.0764	483.3011	0.0000	0.0200		
6	231.5669	230.5831	-2.7500	16.6014	495.1754	483.2021	0.0000	0.0200		
6	232.5669	231.5830	-2.7500	16.6114	495.2745	483.1031	0.0000	0.0200		
6	233.5669	232.5830	-2.7500	16.6214	495.3736	483.0040	0.0000	0.0200		
6	234.5669	233.5829	-2.7500	16.6314	495.4726	482.9049	0.0000	0.0200		
6	235.5669	234.5829	-2.7500	16.6414	495.5717	482.8058	0.0000	0.0200		
6	236.5669	235.5828	-2.7500	16.6514	495.6709	482.7067	0.0000	0.0200		
6	237.5669	236.5828	-2.7500	16.6614	495.7700	482.6076	0.0000	0.0200		
6	238.5669	237.5827	-2.7500	16.6714	495.8692	482.5084	0.0000	0.0200		
6	239.5669	238.5827	-2.7500	16.6813	495.9684	482.4092	0.0000	0.0200		
6	240.5669	239.5826	-2.7500	16.6913	496.0676	482.3100	0.0000	0.0200		
6	241.5669	240.5826	-2.7500	16.7013	496.1668	482.2108	0.0000	0.0200		
6	242.5669	241.5825	-2.7500	16.7113	496.2660	482.1115	0.0000	0.0200		
6	243.5669	242.5825	-2.7500	16.7213	496.3653	482.0123	0.0000	0.0200		
6	244.5669	243.5824	-2.7500	16.7313	496.4646	481.9130	0.0000	0.0200		
6	245.5669	244.5824	-2.7500	16.7413	496.5639	481.8137	0.0000	0.0200		
6	246.5669	245.5823	-2.7500	16.7513	496.6632	481.7144	0.0000	0.0200		
6	247.5669	246.5823	-2.7500	16.7613	496.7625	481.6150	0.0000	0.0200		
6	248.5669	247.5822	-2.7500	16.7713	496.8619	481.5157	0.0000	0.0200		
6	249.5669	248.5822	-2.7500	16.7813	496.9613	481.4163	0.0000	0.0200		
6	250.5669	249.5821	-2.7500	16.7913	497.0607	481.3169	0.0000	0.0200		
6	251.5669	250.5821	-2.7500	16.8013	497.1601	481.2175	0.0000	0.0184		

TENDON Full Length - Canopy C1-R, Calculations

Segment	Length (ft)	X (ft)	Y (ft)	Z (ft)	Force (kips)	Force after Anchor-Set (kips)	Angle Change (deg)	Force Loss (%)	Containing Element	Additional Info.
6	252.4857	251.5008	-2.7500	16.8105	497.2515	481.1261	9.0832	3.9050		
8	253.4857	252.4881	-2.5927	16.8339	517.4583	460.9192	0.0000	0.0200		
8	254.4857	253.4754	-2.4354	16.8573	517.5618	460.8157	0.0000	0.0200		
8	255.4857	254.4627	-2.2781	16.8807	517.6654	460.7122	0.0000	0.0200		
8	256.4857	255.4499	-2.1208	16.9041	517.7689	460.6086	0.0000	0.0200		
8	257.4857	256.4372	-1.9636	16.9275	517.8725	460.5051	0.0000	0.0200		
8	258.4857	257.4245	-1.8063	16.9509	517.9761	460.4015	0.0000	0.0200		
8	259.4857	258.4118	-1.6490	16.9743	518.0797	460.2979	0.0000	0.0200		
8	260.4857	259.3990	-1.4917	16.9977	518.1833	460.1943	0.0000	0.0200		
8	261.4857	260.3863	-1.3344	17.0211	518.2869	460.0906	0.0000	0.0200		
8	262.4857	261.3736	-1.1771	17.0445	518.3906	459.9870	0.0000	0.0013		
8	262.5522	261.4392	-1.1667	17.0461	518.3975	459.9801	9.0832	3.9050		
8-9	263.5522	262.4392	-1.1667	17.0561	539.4637	438.9139	0.0000	0.0200		
8-9	264.5522	263.4391	-1.1667	17.0661	539.5716	438.8060	0.0000	0.0200		
8-9	265.5522	264.4391	-1.1667	17.0761	539.6795	438.6981	0.0000	0.0200		
8-9	266.5522	265.4390	-1.1667	17.0861	539.7874	438.5901	0.0000	0.0200		
8-9	267.5522	266.4390	-1.1667	17.0961	539.8954	438.4822	0.0000	0.0200		
8-9	268.5522	267.4389	-1.1667	17.1061	540.0034	438.3742	0.0000	0.0200		
8-9	269.5522	268.4389	-1.1667	17.1161	540.1114	438.2662	0.0000	0.0045		
9	269.7756	268.6622	-1.1667	17.1183	540.1355	438.2420	1.5921	0.7088		
9	270.6091	269.4951	-1.1667	17.1498	543.9914	434.3861	3.1841	1.3962		
9	271.4426	270.3250	-1.1667	17.2275	551.6940	426.6836	1.5921	0.7051		
10	272.0872	270.9649	-1.1667	17.3054	555.6114	422.7661	0.0000	0.0129		
10	272.7317	271.6047	-1.1667	17.3833	555.6831	422.6945	0.0000	0.0045		
10	272.9560	271.8273	-1.1667	17.4104	555.7080	422.6696	0.0000	0.0000		

STRUCTURE GROUP SUMMARY

Piers									
Joints									
1	2	3	4	5	6	7	8	9	10
11	12	13	14	15	16	17	18	19	20
21	22	23	24	25	27	28	29	30	31
32	33	35	37	39	41	101	103	105	107
109	110	112	113	115	117	119	121	123	125
133	135	137	139	143	147	151	155	1001	1002
1003	1004	2001	2002	2003	3001	3002	3011	3012	400
401	402	403	404	405	406	407	408	409	410
411	412								
Members									
1001	1002	2001	2002	2003	3001	3002	3003	3004	3005
3006	3007	3008	3009	3010	3011	3012	3013	3014	3015
3017	3018	3019	1003	1004	1005	1006	1007	1008	1009
1010	1011	1012	1013	1014	1017	1018	1019	2004	1015
1016	3016	3020	1020	1021	1022				
Springs									
1	2	3	4	5	6	7	8	9	10
11	12	13							

Main Span									
Joints									
1	2	3	4	5	6	7	8	9	10
11	12	13	14	15	16	17	18	19	20
21	22	23	24	25	27	28	29	30	31
32	33	35	37	39	41	101	103	105	107
109	110	112	113	115	117	119	121	123	125
133	135	137	139	143	147	151	155	1001	1002
1003	1004	2001	2002	2003	3001	3002	3011	3012	400
401	402	403	404	405	406	407	408	409	410
411	412								
Members									

1	2	3	4	5	6	7	8	9	10
11	12	13	14	15	16	17	18	102	103
104	105	106	107	108	109	110	111	112	113
400	401	402	403	19	114	115	116	117	118
119	120	121	122	123	701	702	703	707	708
709	713	714	715	716	717	718	719	720	721
722	723	724	728	729	730	704	705	706	710
711	712	725	726	727	731	732	733	20	21
22	23	24	25	26	27	127	128	129	130
124	125	126	60	101	162	800	801	802	803
810	811	812	813	814					

Back Span

Joints

1	2	3	4	5	6	7	8	9	10
11	12	13	14	15	16	17	18	19	20
21	22	23	24	25	27	28	29	30	31
32	33	35	37	39	41	101	103	105	107
109	110	112	113	115	117	119	121	123	125
133	135	137	139	143	147	151	155	1001	1002
1003	1004	2001	2002	2003	3001	3002	3011	3012	400
401	402	403	404	405	406	407	408	409	410
411	412								

Members

28	29	30	31	32	33	34	35	36	37
38	39	131	132	133	134	135	136	137	138
139	140	141	142	143	144	145	146	147	40
41	42	743	744	745	746	747	748	749	750
751	752	753	754	755	756	757	758	759	760
761	762	763	764	765	766	767	768	769	770
771	772	43	44	45	46	47	48	49	50
51	52	53	54	55	56	57	740	741	742
148	149	150	151	152	153	154	155	156	157
158	159	160	161	804	805	806	807	808	809
815	816	817	818	819					

Stay 1									
Joints									
1	2	3	4	5	6	7	8	9	10
11	12	13	14	15	16	17	18	19	20
21	22	23	24	25	27	28	29	30	31
32	33	35	37	39	41	101	103	105	107
109	110	112	113	115	117	119	121	123	125
133	135	137	139	143	147	151	155	1001	1002
1003	1004	2001	2002	2003	3001	3002	3011	3012	400
401	402	403	404	405	406	407	408	409	410
411	412								
Members									
505	605								

Stay 2									
Joints									
1	2	3	4	5	6	7	8	9	10
11	12	13	14	15	16	17	18	19	20
21	22	23	24	25	27	28	29	30	31
32	33	35	37	39	41	101	103	105	107
109	110	112	113	115	117	119	121	123	125
133	135	137	139	143	147	151	155	1001	1002
1003	1004	2001	2002	2003	3001	3002	3011	3012	400
401	402	403	404	405	406	407	408	409	410
411	412								
Members									
504	604								

Stay 3									
Joints									
1	2	3	4	5	6	7	8	9	10
11	12	13	14	15	16	17	18	19	20
21	22	23	24	25	27	28	29	30	31
32	33	35	37	39	41	101	103	105	107
109	110	112	113	115	117	119	121	123	125
133	135	137	139	143	147	151	155	1001	1002

1003	1004	2001	2002	2003	3001	3002	3011	3012	400
401	402	403	404	405	406	407	408	409	410
411	412								

Members

503	603

Stay 4

Joints

1	2	3	4	5	6	7	8	9	10
11	12	13	14	15	16	17	18	19	20
21	22	23	24	25	27	28	29	30	31
32	33	35	37	39	41	101	103	105	107
109	110	112	113	115	117	119	121	123	125
133	135	137	139	143	147	151	155	1001	1002
1003	1004	2001	2002	2003	3001	3002	3011	3012	400
401	402	403	404	405	406	407	408	409	410
411	412								

Members

502	602

Stay 5

Joints

1	2	3	4	5	6	7	8	9	10
11	12	13	14	15	16	17	18	19	20
21	22	23	24	25	27	28	29	30	31
32	33	35	37	39	41	101	103	105	107
109	110	112	113	115	117	119	121	123	125
133	135	137	139	143	147	151	155	1001	1002
1003	1004	2001	2002	2003	3001	3002	3011	3012	400
401	402	403	404	405	406	407	408	409	410
411	412								

Members

501	601

Pylon-Deck

Joints

1	2	3	4	5	6	7	8	9	10
11	12	13	14	15	16	17	18	19	20
21	22	23	24	25	27	28	29	30	31
32	33	35	37	39	41	101	103	105	107
109	110	112	113	115	117	119	121	123	125
133	135	137	139	143	147	151	155	1001	1002
1003	1004	2001	2002	2003	3001	3002	3011	3012	400
401	402	403	404	405	406	407	408	409	410
411	412								

Pylon

Joints

1	2	3	4	5	6	7	8	9	10
11	12	13	14	15	16	17	18	19	20
21	22	23	24	25	27	28	29	30	31
32	33	35	37	39	41	101	103	105	107
109	110	112	113	115	117	119	121	123	125
133	135	137	139	143	147	151	155	1001	1002
1003	1004	2001	2002	2003	3001	3002	3011	3012	400
401	402	403	404	405	406	407	408	409	410
411	412								

Members

404	405	406	407	408	409	410	411	412	413

Load Cases

ID	Name	Analysis Type	Class	Status	Weight Factor X	Weight Factor Y	Weight Factor Z	Is Dynamic Mass?	Assigned to Load Combinati	# of Joint Loads	# of Support Loads	# of Member Loads	# of Member Thermal	# of Plate Loads	# of Moving Loads	# of THA Loading	# of THA Initial
1	SW	Static	Dead Load	Active	0.0000	0.0000	-1.0000	No	Yes	0	0	0	0	0	0	0	0
2	DW_utilities	Static	None	Active	0.0000	0.0000	0.0000	No	Yes	0	0	57	0	0	0	0	0
3	LL1_Deck	Static	None	Active	0.0000	0.0000	0.0000	No	No	0	0	57	0	0	0	0	0
4	LL2_Deck	Static	None	Active	0.0000	0.0000	0.0000	No	No	0	0	27	0	0	0	0	0
5	LL3_Deck	Static	None	Active	0.0000	0.0000	0.0000	No	No	0	0	30	0	0	0	0	0
6	LL1_Roof	Static	None	Active	0.0000	0.0000	0.0000	No	No	0	0	60	0	0	0	0	0
7	LL2_Roof	Static	None	Active	0.0000	0.0000	0.0000	No	No	0	0	30	0	0	0	0	0
8	LL3_Roof	Static	None	Active	0.0000	0.0000	0.0000	No	No	0	0	30	0	0	0	0	0
9	WS_0 deg	Static	None	Active	0.0000	0.0000	0.0000	No	Yes	0	0	286	0	0	0	0	0

Load Cases

ID	Name	Analysis Type	Class	Status	Weight Factor X	Weight Factor Y	Weight Factor Z	Is Dynamic Mass?	Assigned to Load Combinati	# of Joint Loads	# of Support Loads	# of Member Loads	# of Member Thermal	# of Plate Loads	# of Moving Loads	# of THA Loading	# of THA Initial
11	WS_60 deg	Static	None	Active	0.0000	0.0000	0.0000	No	No	0	0	509	0	0	0	0	0
13	WUP	Static	None	Active	0.0000	0.0000	0.0000	No	Yes	0	0	234	0	0	0	0	0
14	WS_-60 deg	Static	None	Active	0.0000	0.0000	0.0000	No	No	0	0	509	0	0	0	0	0
16	TU+	Static	None	Active	0.0000	0.0000	0.0000	No	Yes	0	0	0	193	0	0	0	0
17	TU-	Static	None	Active	0.0000	0.0000	0.0000	No	No	0	0	0	193	0	0	0	0
18	DC3	Static	Dead Load of	Active	0.0000	0.0000	0.0000	No	Yes	1	0	57	0	0	0	0	0
19	Temp.	Static	None	Active	0.0000	0.0000	0.0000	No	Yes	0	0	0	10	0	0	0	0
20	WS_45 deg	Static	None	Active	0.0000	0.0000	0.0000	No	Yes	0	0	509	0	0	0	0	0
21	WS_30 deg	Static	None	Active	0.0000	0.0000	0.0000	No	No	0	0	509	0	0	0	0	0
22	WS_15 deg	Static	None	Active	0.0000	0.0000	0.0000	No	No	0	0	509	0	0	0	0	0
23	WS_-45 deg	Static	None	Active	0.0000	0.0000	0.0000	No	No	0	0	509	0	0	0	0	0
24	WS_-30 deg	Static	None	Active	0.0000	0.0000	0.0000	No	No	0	0	509	0	0	0	0	0
25	WS_-15 deg	Static	None	Active	0.0000	0.0000	0.0000	No	No	0	0	509	0	0	0	0	0
26	LL1_Deck_Offs	Static	None	Active	0.0000	0.0000	0.0000	No	Yes	0	0	114	0	0	0	0	0
27	LL2_Deck_Offs	Static	None	Active	0.0000	0.0000	0.0000	No	No	0	0	54	0	0	0	0	0
28	LL3_Deck_Offs	Static	None	Active	0.0000	0.0000	0.0000	No	No	0	0	60	0	0	0	0	0
29	CT_0 deg	Static	None	Active	0.0000	0.0000	0.0000	No	No	0	0	3	0	0	0	0	0
30	CT_15 deg	Static	None	Active	0.0000	0.0000	0.0000	No	No	0	0	6	0	0	0	0	0
31	WS_0	Static	None	Active	0.0000	0.0000	0.0000	No	No	0	0	286	0	0	0	0	0
32	WS_60	Static	None	Active	0.0000	0.0000	0.0000	No	No	0	0	509	0	0	0	0	0
33	WS_45	Static	None	Active	0.0000	0.0000	0.0000	No	No	0	0	509	0	0	0	0	0
34	WS_30	Static	None	Active	0.0000	0.0000	0.0000	No	No	0	0	509	0	0	0	0	0
35	WS_15	Static	None	Active	0.0000	0.0000	0.0000	No	No	0	0	509	0	0	0	0	0
36	WS_-60	Static	None	Active	0.0000	0.0000	0.0000	No	No	0	0	509	0	0	0	0	0
37	WS_-45	Static	None	Active	0.0000	0.0000	0.0000	No	No	0	0	509	0	0	0	0	0
38	WS_-30	Static	None	Active	0.0000	0.0000	0.0000	No	No	0	0	509	0	0	0	0	0
39	WS_-15	Static	None	Active	0.0000	0.0000	0.0000	No	No	0	0	509	0	0	0	0	0
40	DC2_Main	Static	Dead Load	Active	0.0000	0.0000	0.0000	No	Yes	4	0	22	0	0	0	0	0
41	DC2_Back	Static	Dead Load	Active	0.0000	0.0000	0.0000	No	Yes	5	0	26	0	0	0	0	0

LOAD CASE DW utilities, Member Loads

Member	Type	Direction	Magnitude at Start (kips or kips-ft)	Magnitude at End (kips or kips-ft)	Start Position (x/L)	End Position from start (x/L)
1	Uniform Force	Global Z	-0.7380		0.0000	1.0000
2	Uniform Force	Global Z	-0.7380		0.0000	1.0000
3	Uniform Force	Global Z	-0.7380		0.0000	1.0000
4	Uniform Force	Global Z	-0.7380		0.0000	1.0000
5	Uniform Force	Global Z	-0.7380		0.0000	1.0000
6	Uniform Force	Global Z	-0.7380		0.0000	1.0000
7	Uniform Force	Global Z	-0.7380		0.0000	1.0000
8	Uniform Force	Global Z	-0.7380		0.0000	1.0000
9	Uniform Force	Global Z	-0.7380		0.0000	1.0000
10	Uniform Force	Global Z	-0.7380		0.0000	1.0000
11	Uniform Force	Global Z	-0.7380		0.0000	1.0000
12	Uniform Force	Global Z	-0.7380		0.0000	1.0000
13	Uniform Force	Global Z	-0.7380		0.0000	1.0000
14	Uniform Force	Global Z	-0.7380		0.0000	1.0000
15	Uniform Force	Global Z	-0.7380		0.0000	1.0000
16	Uniform Force	Global Z	-0.7380		0.0000	1.0000
17	Uniform Force	Global Z	-0.7380		0.0000	1.0000
18	Uniform Force	Global Z	-0.7380		0.0000	1.0000
19	Uniform Force	Global Z	-0.7380		0.0000	1.0000
20	Uniform Force	Global Z	-0.7380		0.0000	1.0000
21	Uniform Force	Global Z	-0.7380		0.0000	1.0000
22	Uniform Force	Global Z	-0.7380		0.0000	1.0000
23	Uniform Force	Global Z	-0.7380		0.0000	1.0000
24	Uniform Force	Global Z	-0.7380		0.0000	1.0000
25	Uniform Force	Global Z	-0.7380		0.0000	1.0000
26	Uniform Force	Global Z	-0.7380		0.0000	1.0000
27	Uniform Force	Global Z	-0.7380		0.0000	1.0000
28	Uniform Force	Global Z	-0.7380		0.0000	1.0000
29	Uniform Force	Global Z	-0.7380		0.0000	1.0000
30	Uniform Force	Global Z	-0.7380		0.0000	1.0000

LOAD CASE DW utilities, Member Loads

Member	Type	Direction	Magnitude at Start (kips or kips-ft)	Magnitude at End (kips or kips-ft)	Start Position (x/L)	End Position from start (x/L)
31	Uniform Force	Global Z	-0.7380		0.0000	1.0000
32	Uniform Force	Global Z	-0.7380		0.0000	1.0000
33	Uniform Force	Global Z	-0.7380		0.0000	1.0000
34	Uniform Force	Global Z	-0.7380		0.0000	1.0000
35	Uniform Force	Global Z	-0.7380		0.0000	1.0000
36	Uniform Force	Global Z	-0.7380		0.0000	1.0000
37	Uniform Force	Global Z	-0.7380		0.0000	1.0000
38	Uniform Force	Global Z	-0.7380		0.0000	1.0000
39	Uniform Force	Global Z	-0.7380		0.0000	1.0000
40	Uniform Force	Global Z	-0.7380		0.0000	1.0000
41	Uniform Force	Global Z	-0.7380		0.0000	1.0000
42	Uniform Force	Global Z	-0.7380		0.0000	1.0000
43	Uniform Force	Global Z	-0.7380		0.0000	1.0000
44	Uniform Force	Global Z	-0.7380		0.0000	1.0000
45	Uniform Force	Global Z	-0.7380		0.0000	1.0000
46	Uniform Force	Global Z	-0.7380		0.0000	1.0000
47	Uniform Force	Global Z	-0.7380		0.0000	1.0000
48	Uniform Force	Global Z	-0.7380		0.0000	1.0000
49	Uniform Force	Global Z	-0.7380		0.0000	1.0000
50	Uniform Force	Global Z	-0.7380		0.0000	1.0000
51	Uniform Force	Global Z	-0.7380		0.0000	1.0000
52	Uniform Force	Global Z	-0.7380		0.0000	1.0000
53	Uniform Force	Global Z	-0.7380		0.0000	1.0000
54	Uniform Force	Global Z	-0.7380		0.0000	1.0000
55	Uniform Force	Global Z	-0.7380		0.0000	1.0000
56	Uniform Force	Global Z	-0.7380		0.0000	1.0000
57	Uniform Force	Global Z	-0.7380		0.0000	1.0000

LOAD CASE LL1_Deck, Member Loads

Member	Type	Direction	Magnitude at Start (kips or kips-ft)	Magnitude at End (kips or kips-ft)	Start Position (x/L)	End Position from start (x/L)
1	Uniform Force	Global Z	-2.7000		0.0000	1.0000
2	Uniform Force	Global Z	-2.7000		0.0000	1.0000

LOAD CASE LL1 Deck, Member Loads

Member	Type	Direction	Magnitude at Start (kips or kips-ft)	Magnitude at End (kips or kips-ft)	Start Position (x/L)	End Position from start (x/L)
3	Uniform Force	Global Z	-2.7000		0.0000	1.0000
4	Uniform Force	Global Z	-2.7000		0.0000	1.0000
5	Uniform Force	Global Z	-2.7000		0.0000	1.0000
6	Uniform Force	Global Z	-2.7000		0.0000	1.0000
7	Uniform Force	Global Z	-2.7000		0.0000	1.0000
8	Uniform Force	Global Z	-2.7000		0.0000	1.0000
9	Uniform Force	Global Z	-2.7000		0.0000	1.0000
10	Uniform Force	Global Z	-2.7000		0.0000	1.0000
11	Uniform Force	Global Z	-2.7000		0.0000	1.0000
12	Uniform Force	Global Z	-2.7000		0.0000	1.0000
13	Uniform Force	Global Z	-2.7000		0.0000	1.0000
14	Uniform Force	Global Z	-2.7000		0.0000	1.0000
15	Uniform Force	Global Z	-2.7000		0.0000	1.0000
16	Uniform Force	Global Z	-2.7000		0.0000	1.0000
17	Uniform Force	Global Z	-2.7000		0.0000	1.0000
18	Uniform Force	Global Z	-2.7000		0.0000	1.0000
19	Uniform Force	Global Z	-2.7000		0.0000	1.0000
20	Uniform Force	Global Z	-2.7000		0.0000	1.0000
21	Uniform Force	Global Z	-2.7000		0.0000	1.0000
22	Uniform Force	Global Z	-2.7000		0.0000	1.0000
23	Uniform Force	Global Z	-2.7000		0.0000	1.0000
24	Uniform Force	Global Z	-2.7000		0.0000	1.0000
25	Uniform Force	Global Z	-2.7000		0.0000	1.0000
26	Uniform Force	Global Z	-2.7000		0.0000	1.0000
27	Uniform Force	Global Z	-2.7000		0.0000	1.0000
28	Uniform Force	Global Z	-2.7000		0.0000	1.0000
29	Uniform Force	Global Z	-2.7000		0.0000	1.0000
30	Uniform Force	Global Z	-2.7000		0.0000	1.0000
31	Uniform Force	Global Z	-2.7000		0.0000	1.0000
32	Uniform Force	Global Z	-2.7000		0.0000	1.0000
33	Uniform Force	Global Z	-2.7000		0.0000	1.0000
34	Uniform Force	Global Z	-2.7000		0.0000	1.0000
35	Uniform Force	Global Z	-2.7000		0.0000	1.0000
36	Uniform Force	Global Z	-2.7000		0.0000	1.0000

LOAD CASE LL1 Deck, Member Loads

Member	Type	Direction	Magnitude at Start (kips or kips-ft)	Magnitude at End (kips or kips-ft)	Start Position (x/L)	End Position from start (x/L)
37	Uniform Force	Global Z	-2.7000		0.0000	1.0000
38	Uniform Force	Global Z	-2.7000		0.0000	1.0000
39	Uniform Force	Global Z	-2.7000		0.0000	1.0000
40	Uniform Force	Global Z	-2.7000		0.0000	1.0000
41	Uniform Force	Global Z	-2.7000		0.0000	1.0000
42	Uniform Force	Global Z	-2.7000		0.0000	1.0000
43	Uniform Force	Global Z	-2.7000		0.0000	1.0000
44	Uniform Force	Global Z	-2.7000		0.0000	1.0000
45	Uniform Force	Global Z	-2.7000		0.0000	1.0000
46	Uniform Force	Global Z	-2.7000		0.0000	1.0000
47	Uniform Force	Global Z	-2.7000		0.0000	1.0000
48	Uniform Force	Global Z	-2.7000		0.0000	1.0000
49	Uniform Force	Global Z	-2.7000		0.0000	1.0000
50	Uniform Force	Global Z	-2.7000		0.0000	1.0000
51	Uniform Force	Global Z	-2.7000		0.0000	1.0000
52	Uniform Force	Global Z	-2.7000		0.0000	1.0000
53	Uniform Force	Global Z	-2.7000		0.0000	1.0000
54	Uniform Force	Global Z	-2.7000		0.0000	1.0000
55	Uniform Force	Global Z	-2.7000		0.0000	1.0000
56	Uniform Force	Global Z	-2.7000		0.0000	1.0000
57	Uniform Force	Global Z	-2.7000		0.0000	1.0000

LOAD CASE LL2_Deck, Member Loads

Member	Type	Direction	Magnitude at Start (kips or kips-ft)	Magnitude at End (kips or kips-ft)	Start Position (x/L)	End Position from start (x/L)
1	Uniform Force	Global Z	-2.7000		0.0000	1.0000
2	Uniform Force	Global Z	-2.7000		0.0000	1.0000
3	Uniform Force	Global Z	-2.7000		0.0000	1.0000
4	Uniform Force	Global Z	-2.7000		0.0000	1.0000
5	Uniform Force	Global Z	-2.7000		0.0000	1.0000
6	Uniform Force	Global Z	-2.7000		0.0000	1.0000
7	Uniform Force	Global Z	-2.7000		0.0000	1.0000
8	Uniform Force	Global Z	-2.7000		0.0000	1.0000

LOAD CASE LL2 Deck, Member Loads

Member	Type	Direction	Magnitude at Start (kips or kips-ft)	Magnitude at End (kips or kips-ft)	Start Position (x/L)	End Position from start (x/L)
9	Uniform Force	Global Z	-2.7000		0.0000	1.0000
10	Uniform Force	Global Z	-2.7000		0.0000	1.0000
11	Uniform Force	Global Z	-2.7000		0.0000	1.0000
12	Uniform Force	Global Z	-2.7000		0.0000	1.0000
13	Uniform Force	Global Z	-2.7000		0.0000	1.0000
14	Uniform Force	Global Z	-2.7000		0.0000	1.0000
15	Uniform Force	Global Z	-2.7000		0.0000	1.0000
16	Uniform Force	Global Z	-2.7000		0.0000	1.0000
17	Uniform Force	Global Z	-2.7000		0.0000	1.0000
18	Uniform Force	Global Z	-2.7000		0.0000	1.0000
19	Uniform Force	Global Z	-2.7000		0.0000	1.0000
20	Uniform Force	Global Z	-2.7000		0.0000	1.0000
21	Uniform Force	Global Z	-2.7000		0.0000	1.0000
22	Uniform Force	Global Z	-2.7000		0.0000	1.0000
23	Uniform Force	Global Z	-2.7000		0.0000	1.0000
24	Uniform Force	Global Z	-2.7000		0.0000	1.0000
25	Uniform Force	Global Z	-2.7000		0.0000	1.0000
26	Uniform Force	Global Z	-2.7000		0.0000	1.0000
27	Uniform Force	Global Z	-2.7000		0.0000	1.0000

LOAD CASE LL3_Deck, Member Loads

Member	Type	Direction	Magnitude at Start (kips or kips-ft)	Magnitude at End (kips or kips-ft)	Start Position (x/L)	End Position from start (x/L)
28	Uniform Force	Global Z	-2.7000		0.0000	1.0000
29	Uniform Force	Global Z	-2.7000		0.0000	1.0000
30	Uniform Force	Global Z	-2.7000		0.0000	1.0000
31	Uniform Force	Global Z	-2.7000		0.0000	1.0000
32	Uniform Force	Global Z	-2.7000		0.0000	1.0000
33	Uniform Force	Global Z	-2.7000		0.0000	1.0000
34	Uniform Force	Global Z	-2.7000		0.0000	1.0000
35	Uniform Force	Global Z	-2.7000		0.0000	1.0000
36	Uniform Force	Global Z	-2.7000		0.0000	1.0000
37	Uniform Force	Global Z	-2.7000		0.0000	1.0000

LOAD CASE LL3 Deck, Member Loads

Member	Type	Direction	Magnitude at Start (kips or kips-ft)	Magnitude at End (kips or kips-ft)	Start Position (x/L)	End Position from start (x/L)
38	Uniform Force	Global Z	-2.7000		0.0000	1.0000
39	Uniform Force	Global Z	-2.7000		0.0000	1.0000
40	Uniform Force	Global Z	-2.7000		0.0000	1.0000
41	Uniform Force	Global Z	-2.7000		0.0000	1.0000
42	Uniform Force	Global Z	-2.7000		0.0000	1.0000
43	Uniform Force	Global Z	-2.7000		0.0000	1.0000
44	Uniform Force	Global Z	-2.7000		0.0000	1.0000
45	Uniform Force	Global Z	-2.7000		0.0000	1.0000
46	Uniform Force	Global Z	-2.7000		0.0000	1.0000
47	Uniform Force	Global Z	-2.7000		0.0000	1.0000
48	Uniform Force	Global Z	-2.7000		0.0000	1.0000
49	Uniform Force	Global Z	-2.7000		0.0000	1.0000
50	Uniform Force	Global Z	-2.7000		0.0000	1.0000
51	Uniform Force	Global Z	-2.7000		0.0000	1.0000
52	Uniform Force	Global Z	-2.7000		0.0000	1.0000
53	Uniform Force	Global Z	-2.7000		0.0000	1.0000
54	Uniform Force	Global Z	-2.7000		0.0000	1.0000
55	Uniform Force	Global Z	-2.7000		0.0000	1.0000
56	Uniform Force	Global Z	-2.7000		0.0000	1.0000
57	Uniform Force	Global Z	-2.7000		0.0000	1.0000

LOAD CASE LL1_Roof, Member Loads

Member	Type	Direction	Magnitude at Start (kips or kips-ft)	Magnitude at End (kips or kips-ft)	Start Position (x/L)	End Position from start (x/L)
101	Uniform Force	Global Z	-0.3200		0.0000	1.0000
102	Uniform Force	Global Z	-0.3200		0.0000	1.0000
103	Uniform Force	Global Z	-0.3200		0.0000	1.0000
104	Uniform Force	Global Z	-0.3200		0.0000	1.0000
105	Uniform Force	Global Z	-0.3200		0.0000	1.0000
106	Uniform Force	Global Z	-0.3200		0.0000	1.0000
107	Uniform Force	Global Z	-0.3200		0.0000	1.0000
108	Uniform Force	Global Z	-0.3200		0.0000	1.0000
109	Uniform Force	Global Z	-0.3200		0.0000	1.0000

LOAD CASE LL1 Roof, Member Loads

Member	Type	Direction	Magnitude at Start (kips or kips-ft)	Magnitude at End (kips or kips-ft)	Start Position (x/L)	End Position from start (x/L)
110	Uniform Force	Global Z	-0.3200		0.0000	1.0000
111	Uniform Force	Global Z	-0.3200		0.0000	1.0000
112	Uniform Force	Global Z	-0.3200		0.0000	1.0000
113	Uniform Force	Global Z	-0.3200		0.0000	1.0000
114	Uniform Force	Global Z	-0.3200		0.0000	1.0000
115	Uniform Force	Global Z	-0.3200		0.0000	1.0000
116	Uniform Force	Global Z	-0.3200		0.0000	1.0000
117	Uniform Force	Global Z	-0.3200		0.0000	1.0000
118	Uniform Force	Global Z	-0.3200		0.0000	1.0000
119	Uniform Force	Global Z	-0.3200		0.0000	1.0000
120	Uniform Force	Global Z	-0.3200		0.0000	1.0000
121	Uniform Force	Global Z	-0.3200		0.0000	1.0000
122	Uniform Force	Global Z	-0.3200		0.0000	1.0000
123	Uniform Force	Global Z	-0.3200		0.0000	1.0000
124	Uniform Force	Global Z	-0.3200		0.0000	1.0000
125	Uniform Force	Global Z	-0.3200		0.0000	1.0000
126	Uniform Force	Global Z	-0.3200		0.0000	1.0000
127	Uniform Force	Global Z	-0.3200		0.0000	1.0000
128	Uniform Force	Global Z	-0.3200		0.0000	1.0000
129	Uniform Force	Global Z	-0.3200		0.0000	1.0000
130	Uniform Force	Global Z	-0.3200		0.0000	1.0000
131	Uniform Force	Global Z	-0.3200		0.0000	1.0000
132	Uniform Force	Global Z	-0.3200		0.0000	1.0000
133	Uniform Force	Global Z	-0.3200		0.0000	1.0000
134	Uniform Force	Global Z	-0.3200		0.0000	1.0000
135	Uniform Force	Global Z	-0.3200		0.0000	1.0000
136	Uniform Force	Global Z	-0.3200		0.0000	1.0000
137	Uniform Force	Global Z	-0.3200		0.0000	1.0000
138	Uniform Force	Global Z	-0.3200		0.0000	1.0000
139	Uniform Force	Global Z	-0.3200		0.0000	1.0000
140	Uniform Force	Global Z	-0.3200		0.0000	1.0000
141	Uniform Force	Global Z	-0.3200		0.0000	1.0000
142	Uniform Force	Global Z	-0.3200		0.0000	1.0000
143	Uniform Force	Global Z	-0.3200		0.0000	1.0000

LOAD CASE LL1 Roof, Member Loads

Member	Type	Direction	Magnitude at Start (kips or kips-ft)	Magnitude at End (kips or kips-ft)	Start Position (x/L)	End Position from start (x/L)
144	Uniform Force	Global Z	-0.3200		0.0000	1.0000
145	Uniform Force	Global Z	-0.3200		0.0000	1.0000
146	Uniform Force	Global Z	-0.3200		0.0000	1.0000
147	Uniform Force	Global Z	-0.3200		0.0000	1.0000
148	Uniform Force	Global Z	-0.3200		0.0000	1.0000
149	Uniform Force	Global Z	-0.3200		0.0000	1.0000
150	Uniform Force	Global Z	-0.3200		0.0000	1.0000
151	Uniform Force	Global Z	-0.3200		0.0000	1.0000
152	Uniform Force	Global Z	-0.3200		0.0000	1.0000
153	Uniform Force	Global Z	-0.3200		0.0000	1.0000
154	Uniform Force	Global Z	-0.3200		0.0000	1.0000
155	Uniform Force	Global Z	-0.3200		0.0000	1.0000
156	Uniform Force	Global Z	-0.3200		0.0000	1.0000
157	Uniform Force	Global Z	-0.3200		0.0000	1.0000
158	Uniform Force	Global Z	-0.3200		0.0000	1.0000
159	Uniform Force	Global Z	-0.3200		0.0000	1.0000
160	Uniform Force	Global Z	-0.3200		0.0000	1.0000

LOAD CASE LL2_Roof, Member Loads

Member	Type	Direction	Magnitude at Start (kips or kips-ft)	Magnitude at End (kips or kips-ft)	Start Position (x/L)	End Position from start (x/L)
101	Uniform Force	Global Z	-0.3200		0.0000	1.0000
102	Uniform Force	Global Z	-0.3200		0.0000	1.0000
103	Uniform Force	Global Z	-0.3200		0.0000	1.0000
104	Uniform Force	Global Z	-0.3200		0.0000	1.0000
105	Uniform Force	Global Z	-0.3200		0.0000	1.0000
106	Uniform Force	Global Z	-0.3200		0.0000	1.0000
107	Uniform Force	Global Z	-0.3200		0.0000	1.0000
108	Uniform Force	Global Z	-0.3200		0.0000	1.0000
109	Uniform Force	Global Z	-0.3200		0.0000	1.0000
110	Uniform Force	Global Z	-0.3200		0.0000	1.0000
111	Uniform Force	Global Z	-0.3200		0.0000	1.0000
112	Uniform Force	Global Z	-0.3200		0.0000	1.0000

LOAD CASE LL2 Roof, Member Loads

Member	Type	Direction	Magnitude at Start (kips or kips-ft)	Magnitude at End (kips or kips-ft)	Start Position (x/L)	End Position from start (x/L)
113	Uniform Force	Global Z	-0.3200		0.0000	1.0000
114	Uniform Force	Global Z	-0.3200		0.0000	1.0000
115	Uniform Force	Global Z	-0.3200		0.0000	1.0000
116	Uniform Force	Global Z	-0.3200		0.0000	1.0000
117	Uniform Force	Global Z	-0.3200		0.0000	1.0000
118	Uniform Force	Global Z	-0.3200		0.0000	1.0000
119	Uniform Force	Global Z	-0.3200		0.0000	1.0000
120	Uniform Force	Global Z	-0.3200		0.0000	1.0000
121	Uniform Force	Global Z	-0.3200		0.0000	1.0000
122	Uniform Force	Global Z	-0.3200		0.0000	1.0000
123	Uniform Force	Global Z	-0.3200		0.0000	1.0000
124	Uniform Force	Global Z	-0.3200		0.0000	1.0000
125	Uniform Force	Global Z	-0.3200		0.0000	1.0000
126	Uniform Force	Global Z	-0.3200		0.0000	1.0000
127	Uniform Force	Global Z	-0.3200		0.0000	1.0000
128	Uniform Force	Global Z	-0.3200		0.0000	1.0000
129	Uniform Force	Global Z	-0.3200		0.0000	1.0000
130	Uniform Force	Global Z	-0.3200		0.0000	1.0000

LOAD CASE LL3_Roof, Member Loads

Member	Type	Direction	Magnitude at Start (kips or kips-ft)	Magnitude at End (kips or kips-ft)	Start Position (x/L)	End Position from start (x/L)
131	Uniform Force	Global Z	-0.3200		0.0000	1.0000
132	Uniform Force	Global Z	-0.3200		0.0000	1.0000
133	Uniform Force	Global Z	-0.3200		0.0000	1.0000
134	Uniform Force	Global Z	-0.3200		0.0000	1.0000
135	Uniform Force	Global Z	-0.3200		0.0000	1.0000
136	Uniform Force	Global Z	-0.3200		0.0000	1.0000
137	Uniform Force	Global Z	-0.3200		0.0000	1.0000
138	Uniform Force	Global Z	-0.3200		0.0000	1.0000
139	Uniform Force	Global Z	-0.3200		0.0000	1.0000
140	Uniform Force	Global Z	-0.3200		0.0000	1.0000
141	Uniform Force	Global Z	-0.3200		0.0000	1.0000

LOAD CASE LL3 Roof, Member Loads

Member	Type	Direction	Magnitude at Start (kips or kips-ft)	Magnitude at End (kips or kips-ft)	Start Position (x/L)	End Position from start (x/L)
142	Uniform Force	Global Z	-0.3200		0.0000	1.0000
143	Uniform Force	Global Z	-0.3200		0.0000	1.0000
144	Uniform Force	Global Z	-0.3200		0.0000	1.0000
145	Uniform Force	Global Z	-0.3200		0.0000	1.0000
146	Uniform Force	Global Z	-0.3200		0.0000	1.0000
147	Uniform Force	Global Z	-0.3200		0.0000	1.0000
148	Uniform Force	Global Z	-0.3200		0.0000	1.0000
149	Uniform Force	Global Z	-0.3200		0.0000	1.0000
150	Uniform Force	Global Z	-0.3200		0.0000	1.0000
151	Uniform Force	Global Z	-0.3200		0.0000	1.0000
152	Uniform Force	Global Z	-0.3200		0.0000	1.0000
153	Uniform Force	Global Z	-0.3200		0.0000	1.0000
154	Uniform Force	Global Z	-0.3200		0.0000	1.0000
155	Uniform Force	Global Z	-0.3200		0.0000	1.0000
156	Uniform Force	Global Z	-0.3200		0.0000	1.0000
157	Uniform Force	Global Z	-0.3200		0.0000	1.0000
158	Uniform Force	Global Z	-0.3200		0.0000	1.0000
159	Uniform Force	Global Z	-0.3200		0.0000	1.0000
160	Uniform Force	Global Z	-0.3200		0.0000	1.0000

LOAD CASE WS_0 deg, Member Loads

Member	Type	Direction	Magnitude at Start (kips or kips-ft)	Magnitude at End (kips or kips-ft)	Start Position (x/L)	End Position from start (x/L)
1	Uniform Force	Global Y	0.3800		0.0000	1.0000
2	Uniform Force	Global Y	0.3800		0.0000	1.0000
3	Uniform Force	Global Y	0.3800		0.0000	1.0000
4	Uniform Force	Global Y	0.3800		0.0000	1.0000
5	Uniform Force	Global Y	0.3800		0.0000	1.0000
6	Uniform Force	Global Y	0.3800		0.0000	1.0000
7	Uniform Force	Global Y	0.3800		0.0000	1.0000
8	Uniform Force	Global Y	0.3800		0.0000	1.0000
9	Uniform Force	Global Y	0.3800		0.0000	1.0000
10	Uniform Force	Global Y	0.3800		0.0000	1.0000

LOAD CASE WS 0 deg, Member Loads

Member	Type	Direction	Magnitude at Start (kips or kips-ft)	Magnitude at End (kips or kips-ft)	Start Position (x/L)	End Position from start (x/L)
11	Uniform Force	Global Y	0.3800		0.0000	1.0000
12	Uniform Force	Global Y	0.3800		0.0000	1.0000
13	Uniform Force	Global Y	0.3800		0.0000	1.0000
14	Uniform Force	Global Y	0.3800		0.0000	1.0000
15	Uniform Force	Global Y	0.3800		0.0000	1.0000
16	Uniform Force	Global Y	0.3800		0.0000	1.0000
17	Uniform Force	Global Y	0.3800		0.0000	1.0000
18	Uniform Force	Global Y	0.3800		0.0000	1.0000
19	Uniform Force	Global Y	0.3800		0.0000	1.0000
20	Uniform Force	Global Y	0.3800		0.0000	1.0000
21	Uniform Force	Global Y	0.3800		0.0000	1.0000
22	Uniform Force	Global Y	0.3800		0.0000	1.0000
23	Uniform Force	Global Y	0.3800		0.0000	1.0000
24	Uniform Force	Global Y	0.3800		0.0000	1.0000
25	Uniform Force	Global Y	0.3800		0.0000	1.0000
26	Uniform Force	Global Y	0.3800		0.0000	1.0000
27	Uniform Force	Global Y	0.3800		0.0000	1.0000
28	Uniform Force	Global Y	0.3800		0.0000	1.0000
29	Uniform Force	Global Y	0.3800		0.0000	1.0000
30	Uniform Force	Global Y	0.3800		0.0000	1.0000
31	Uniform Force	Global Y	0.3800		0.0000	1.0000
32	Uniform Force	Global Y	0.3800		0.0000	1.0000
33	Uniform Force	Global Y	0.3800		0.0000	1.0000
34	Uniform Force	Global Y	0.3800		0.0000	1.0000
35	Uniform Force	Global Y	0.3800		0.0000	1.0000
36	Uniform Force	Global Y	0.3800		0.0000	1.0000
37	Uniform Force	Global Y	0.3800		0.0000	1.0000
38	Uniform Force	Global Y	0.3800		0.0000	1.0000
39	Uniform Force	Global Y	0.3800		0.0000	1.0000
40	Uniform Force	Global Y	0.3800		0.0000	1.0000
41	Uniform Force	Global Y	0.3800		0.0000	1.0000
42	Uniform Force	Global Y	0.3800		0.0000	1.0000
43	Uniform Force	Global Y	0.3800		0.0000	1.0000
44	Uniform Force	Global Y	0.3800		0.0000	1.0000

LOAD CASE WS 0 deg, Member Loads

Member	Type	Direction	Magnitude at Start (kips or kips-ft)	Magnitude at End (kips or kips-ft)	Start Position (x/L)	End Position from start (x/L)
45	Uniform Force	Global Y	0.3800		0.0000	1.0000
46	Uniform Force	Global Y	0.3800		0.0000	1.0000
47	Uniform Force	Global Y	0.3800		0.0000	1.0000
48	Uniform Force	Global Y	0.3800		0.0000	1.0000
49	Uniform Force	Global Y	0.3800		0.0000	1.0000
50	Uniform Force	Global Y	0.3800		0.0000	1.0000
51	Uniform Force	Global Y	0.3800		0.0000	1.0000
52	Uniform Force	Global Y	0.3800		0.0000	1.0000
53	Uniform Force	Global Y	0.3800		0.0000	1.0000
54	Uniform Force	Global Y	0.3800		0.0000	1.0000
55	Uniform Force	Global Y	0.3800		0.0000	1.0000
56	Uniform Force	Global Y	0.3800		0.0000	1.0000
57	Uniform Force	Global Y	0.3800		0.0000	1.0000
101	Uniform Force	Global Y	0.1300		0.0000	1.0000
102	Uniform Force	Global Y	0.1300		0.0000	1.0000
103	Uniform Force	Global Y	0.1300		0.0000	1.0000
104	Uniform Force	Global Y	0.1300		0.0000	1.0000
105	Uniform Force	Global Y	0.1300		0.0000	1.0000
106	Uniform Force	Global Y	0.1300		0.0000	1.0000
107	Uniform Force	Global Y	0.1300		0.0000	1.0000
108	Uniform Force	Global Y	0.1300		0.0000	1.0000
109	Uniform Force	Global Y	0.1300		0.0000	1.0000
110	Uniform Force	Global Y	0.1300		0.0000	1.0000
111	Uniform Force	Global Y	0.1300		0.0000	1.0000
112	Uniform Force	Global Y	0.1300		0.0000	1.0000
113	Uniform Force	Global Y	0.1300		0.0000	1.0000
114	Uniform Force	Global Y	0.1300		0.0000	1.0000
115	Uniform Force	Global Y	0.1300		0.0000	1.0000
116	Uniform Force	Global Y	0.1300		0.0000	1.0000
117	Uniform Force	Global Y	0.1300		0.0000	1.0000
118	Uniform Force	Global Y	0.1300		0.0000	1.0000
119	Uniform Force	Global Y	0.1300		0.0000	1.0000
120	Uniform Force	Global Y	0.1300		0.0000	1.0000
121	Uniform Force	Global Y	0.1300		0.0000	1.0000

LOAD CASE WS 0 deg, Member Loads

Member	Type	Direction	Magnitude at Start (kips or kips-ft)	Magnitude at End (kips or kips-ft)	Start Position (x/L)	End Position from start (x/L)
122	Uniform Force	Global Y	0.1300		0.0000	1.0000
123	Uniform Force	Global Y	0.1300		0.0000	1.0000
124	Uniform Force	Global Y	0.1300		0.0000	1.0000
125	Uniform Force	Global Y	0.1300		0.0000	1.0000
126	Uniform Force	Global Y	0.1300		0.0000	1.0000
127	Uniform Force	Global Y	0.1300		0.0000	1.0000
128	Uniform Force	Global Y	0.1300		0.0000	1.0000
129	Uniform Force	Global Y	0.1300		0.0000	1.0000
130	Uniform Force	Global Y	0.1300		0.0000	1.0000
131	Uniform Force	Global Y	0.1300		0.0000	1.0000
132	Uniform Force	Global Y	0.1300		0.0000	1.0000
133	Uniform Force	Global Y	0.1300		0.0000	1.0000
134	Uniform Force	Global Y	0.1300		0.0000	1.0000
135	Uniform Force	Global Y	0.1300		0.0000	1.0000
136	Uniform Force	Global Y	0.1300		0.0000	1.0000
137	Uniform Force	Global Y	0.1300		0.0000	1.0000
138	Uniform Force	Global Y	0.1300		0.0000	1.0000
139	Uniform Force	Global Y	0.1300		0.0000	1.0000
140	Uniform Force	Global Y	0.1300		0.0000	1.0000
141	Uniform Force	Global Y	0.1300		0.0000	1.0000
142	Uniform Force	Global Y	0.1300		0.0000	1.0000
143	Uniform Force	Global Y	0.1300		0.0000	1.0000
144	Uniform Force	Global Y	0.1300		0.0000	1.0000
145	Uniform Force	Global Y	0.1300		0.0000	1.0000
146	Uniform Force	Global Y	0.1300		0.0000	1.0000
147	Uniform Force	Global Y	0.1300		0.0000	1.0000
148	Uniform Force	Global Y	0.1300		0.0000	1.0000
149	Uniform Force	Global Y	0.1300		0.0000	1.0000
150	Uniform Force	Global Y	0.1300		0.0000	1.0000
151	Uniform Force	Global Y	0.1300		0.0000	1.0000
152	Uniform Force	Global Y	0.1300		0.0000	1.0000
153	Uniform Force	Global Y	0.1300		0.0000	1.0000
154	Uniform Force	Global Y	0.1300		0.0000	1.0000
155	Uniform Force	Global Y	0.1300		0.0000	1.0000

LOAD CASE WS 0 deg, Member Loads

Member	Type	Direction	Magnitude at Start (kips or kips-ft)	Magnitude at End (kips or kips-ft)	Start Position (x/L)	End Position from start (x/L)
156	Uniform Force	Global Y	0.1300		0.0000	1.0000
157	Uniform Force	Global Y	0.1300		0.0000	1.0000
158	Uniform Force	Global Y	0.1300		0.0000	1.0000
159	Uniform Force	Global Y	0.1300		0.0000	1.0000
160	Uniform Force	Global Y	0.1300		0.0000	1.0000
701	Uniform Force	Global Y	0.1200		0.0000	1.0000
702	Uniform Force	Global Y	0.1200		0.0000	1.0000
703	Uniform Force	Global Y	0.1200		0.0000	1.0000
704	Uniform Force	Global Y	0.1200		0.0000	1.0000
705	Uniform Force	Global Y	0.1200		0.0000	1.0000
706	Uniform Force	Global Y	0.1200		0.0000	1.0000
707	Uniform Force	Global Y	0.1200		0.0000	1.0000
708	Uniform Force	Global Y	0.1200		0.0000	1.0000
709	Uniform Force	Global Y	0.1200		0.0000	1.0000
710	Uniform Force	Global Y	0.1200		0.0000	1.0000
711	Uniform Force	Global Y	0.1200		0.0000	1.0000
712	Uniform Force	Global Y	0.1200		0.0000	1.0000
713	Uniform Force	Global Y	0.1200		0.0000	1.0000
714	Uniform Force	Global Y	0.1200		0.0000	1.0000
715	Uniform Force	Global Y	0.1200		0.0000	1.0000
716	Uniform Force	Global Y	0.1200		0.0000	1.0000
717	Uniform Force	Global Y	0.1200		0.0000	1.0000
718	Uniform Force	Global Y	0.1200		0.0000	1.0000
719	Uniform Force	Global Y	0.1200		0.0000	1.0000
720	Uniform Force	Global Y	0.1200		0.0000	1.0000
721	Uniform Force	Global Y	0.1200		0.0000	1.0000
722	Uniform Force	Global Y	0.1200		0.0000	1.0000
723	Uniform Force	Global Y	0.1200		0.0000	1.0000
724	Uniform Force	Global Y	0.1200		0.0000	1.0000
725	Uniform Force	Global Y	0.1200		0.0000	1.0000
726	Uniform Force	Global Y	0.1200		0.0000	1.0000
727	Uniform Force	Global Y	0.1200		0.0000	1.0000
728	Uniform Force	Global Y	0.1200		0.0000	1.0000
729	Uniform Force	Global Y	0.1200		0.0000	1.0000

LOAD CASE WS 0 deg, Member Loads

Member	Type	Direction	Magnitude at Start (kips or kips-ft)	Magnitude at End (kips or kips-ft)	Start Position (x/L)	End Position from start (x/L)
730	Uniform Force	Global Y	0.1200		0.0000	1.0000
731	Uniform Force	Global Y	0.1200		0.0000	1.0000
732	Uniform Force	Global Y	0.1200		0.0000	1.0000
733	Uniform Force	Global Y	0.1200		0.0000	1.0000
740	Uniform Force	Global Y	0.1200		0.0000	1.0000
741	Uniform Force	Global Y	0.1200		0.0000	1.0000
742	Uniform Force	Global Y	0.1200		0.0000	1.0000
743	Uniform Force	Global Y	0.1200		0.0000	1.0000
744	Uniform Force	Global Y	0.1200		0.0000	1.0000
745	Uniform Force	Global Y	0.1200		0.0000	1.0000
746	Uniform Force	Global Y	0.1200		0.0000	1.0000
747	Uniform Force	Global Y	0.1200		0.0000	1.0000
748	Uniform Force	Global Y	0.1200		0.0000	1.0000
749	Uniform Force	Global Y	0.1200		0.0000	1.0000
750	Uniform Force	Global Y	0.1200		0.0000	1.0000
751	Uniform Force	Global Y	0.1200		0.0000	1.0000
752	Uniform Force	Global Y	0.1200		0.0000	1.0000
753	Uniform Force	Global Y	0.1200		0.0000	1.0000
754	Uniform Force	Global Y	0.1200		0.0000	1.0000
755	Uniform Force	Global Y	0.1200		0.0000	1.0000
756	Uniform Force	Global Y	0.1200		0.0000	1.0000
757	Uniform Force	Global Y	0.1200		0.0000	1.0000
758	Uniform Force	Global Y	0.1200		0.0000	1.0000
759	Uniform Force	Global Y	0.1200		0.0000	1.0000
760	Uniform Force	Global Y	0.1200		0.0000	1.0000
761	Uniform Force	Global Y	0.1200		0.0000	1.0000
762	Uniform Force	Global Y	0.1200		0.0000	1.0000
763	Uniform Force	Global Y	0.1200		0.0000	1.0000
764	Uniform Force	Global Y	0.1200		0.0000	1.0000
765	Uniform Force	Global Y	0.1200		0.0000	1.0000
766	Uniform Force	Global Y	0.1200		0.0000	1.0000
767	Uniform Force	Global Y	0.1200		0.0000	1.0000
768	Uniform Force	Global Y	0.1200		0.0000	1.0000
769	Uniform Force	Global Y	0.1200		0.0000	1.0000

LOAD CASE WS 0 deg, Member Loads

Member	Type	Direction	Magnitude at Start (kips or kips-ft)	Magnitude at End (kips or kips-ft)	Start Position (x/L)	End Position from start (x/L)
770	Uniform Force	Global Y	0.1200		0.0000	1.0000
771	Uniform Force	Global Y	0.1200		0.0000	1.0000
772	Uniform Force	Global Y	0.1200		0.0000	1.0000
1	Uniform Moment	Local x	-0.9600		0.0000	1.0000
2	Uniform Moment	Local x	-0.9600		0.0000	1.0000
3	Uniform Moment	Local x	-0.9600		0.0000	1.0000
4	Uniform Moment	Local x	-0.9600		0.0000	1.0000
5	Uniform Moment	Local x	-0.9600		0.0000	1.0000
6	Uniform Moment	Local x	-0.9600		0.0000	1.0000
7	Uniform Moment	Local x	-0.9600		0.0000	1.0000
8	Uniform Moment	Local x	-0.9600		0.0000	1.0000
9	Uniform Moment	Local x	-0.9600		0.0000	1.0000
10	Uniform Moment	Local x	-0.9600		0.0000	1.0000
11	Uniform Moment	Local x	-0.9600		0.0000	1.0000
12	Uniform Moment	Local x	-0.9600		0.0000	1.0000
13	Uniform Moment	Local x	-0.9600		0.0000	1.0000
14	Uniform Moment	Local x	-0.9600		0.0000	1.0000
15	Uniform Moment	Local x	-0.9600		0.0000	1.0000
16	Uniform Moment	Local x	-0.9600		0.0000	1.0000
17	Uniform Moment	Local x	-0.9600		0.0000	1.0000
18	Uniform Moment	Local x	-0.9600		0.0000	1.0000
19	Uniform Moment	Local x	-0.9600		0.0000	1.0000
20	Uniform Moment	Local x	-0.9600		0.0000	1.0000
21	Uniform Moment	Local x	-0.9600		0.0000	1.0000
22	Uniform Moment	Local x	-0.9600		0.0000	1.0000
23	Uniform Moment	Local x	-0.9600		0.0000	1.0000
24	Uniform Moment	Local x	-0.9600		0.0000	1.0000
25	Uniform Moment	Local x	-0.9600		0.0000	1.0000
26	Uniform Moment	Local x	-0.9600		0.0000	1.0000
27	Uniform Moment	Local x	-0.9600		0.0000	1.0000
28	Uniform Moment	Local x	-0.9600		0.0000	1.0000
29	Uniform Moment	Local x	-0.9600		0.0000	1.0000
30	Uniform Moment	Local x	-0.9600		0.0000	1.0000
31	Uniform Moment	Local x	-0.9600		0.0000	1.0000

LOAD CASE WS 0 deg, Member Loads

Member	Type	Direction	Magnitude at Start (kips or kips-ft)	Magnitude at End (kips or kips-ft)	Start Position (x/L)	End Position from start (x/L)
32	Uniform Moment	Local x	-0.9600		0.0000	1.0000
33	Uniform Moment	Local x	-0.9600		0.0000	1.0000
34	Uniform Moment	Local x	-0.9600		0.0000	1.0000
35	Uniform Moment	Local x	-0.9600		0.0000	1.0000
36	Uniform Moment	Local x	-0.9600		0.0000	1.0000
37	Uniform Moment	Local x	-0.9600		0.0000	1.0000
38	Uniform Moment	Local x	-0.9600		0.0000	1.0000
39	Uniform Moment	Local x	-0.9600		0.0000	1.0000
40	Uniform Moment	Local x	-0.9600		0.0000	1.0000
41	Uniform Moment	Local x	-0.9600		0.0000	1.0000
42	Uniform Moment	Local x	-0.9600		0.0000	1.0000
43	Uniform Moment	Local x	-0.9600		0.0000	1.0000
44	Uniform Moment	Local x	-0.9600		0.0000	1.0000
45	Uniform Moment	Local x	-0.9600		0.0000	1.0000
46	Uniform Moment	Local x	-0.9600		0.0000	1.0000
47	Uniform Moment	Local x	-0.9600		0.0000	1.0000
48	Uniform Moment	Local x	-0.9600		0.0000	1.0000
49	Uniform Moment	Local x	-0.9600		0.0000	1.0000
50	Uniform Moment	Local x	-0.9600		0.0000	1.0000
51	Uniform Moment	Local x	-0.9600		0.0000	1.0000
52	Uniform Moment	Local x	-0.9600		0.0000	1.0000
53	Uniform Moment	Local x	-0.9600		0.0000	1.0000
54	Uniform Moment	Local x	-0.9600		0.0000	1.0000
55	Uniform Moment	Local x	-0.9600		0.0000	1.0000
56	Uniform Moment	Local x	-0.9600		0.0000	1.0000
57	Uniform Moment	Local x	-0.9600		0.0000	1.0000
2002	Uniform Force	Global Y	0.4020		0.0000	1.0000
2003	Uniform Force	Global Y	0.4020		0.0000	1.0000
1017	Uniform Force	Global Y	0.3350		0.0000	1.0000
1018	Uniform Force	Global Y	0.3350		0.0000	1.0000
1019	Uniform Force	Global Y	0.3350		0.0000	1.0000
1013	Uniform Force	Global Y	0.3350		0.0000	1.0000
1014	Uniform Force	Global Y	0.3350		0.0000	1.0000
1015	Uniform Force	Global Y	0.3350		0.0000	1.0000

LOAD CASE WS 0 deg, Member Loads

Member	Type	Direction	Magnitude at Start (kips or kips-ft)	Magnitude at End (kips or kips-ft)	Start Position (x/L)	End Position from start (x/L)
3017	Uniform Force	Global Y	0.3350		0.0000	1.0000
3018	Uniform Force	Global Y	0.3350		0.0000	1.0000
3019	Uniform Force	Global Y	0.3350		0.0000	1.0000
3013	Uniform Force	Global Y	0.3350		0.0000	1.0000
3014	Uniform Force	Global Y	0.3350		0.0000	1.0000
3015	Uniform Force	Global Y	0.3350		0.0000	1.0000
501	Uniform Force	Global Y	0.0970		0.0000	1.0000
502	Uniform Force	Global Y	0.0970		0.0000	1.0000
503	Uniform Force	Global Y	0.0970		0.0000	1.0000
504	Uniform Force	Global Y	0.0970		0.0000	1.0000
505	Uniform Force	Global Y	0.0970		0.0000	1.0000
601	Uniform Force	Global Y	0.0970		0.0000	1.0000
602	Uniform Force	Global Y	0.0970		0.0000	1.0000
603	Uniform Force	Global Y	0.0970		0.0000	1.0000
604	Uniform Force	Global Y	0.0970		0.0000	1.0000
605	Uniform Force	Global Y	0.0970		0.0000	1.0000
401	Uniform Force	Global Y	0.4020		0.0000	1.0000
402	Uniform Force	Global Y	0.4020		0.0000	1.0000
403	Uniform Force	Global Y	0.4020		0.0000	1.0000
405	Trapezoidal Force	Global Y	0.5000	0.4800	0.0000	1.0000
406	Trapezoidal Force	Global Y	0.4800	0.4700	0.0000	1.0000
407	Trapezoidal Force	Global Y	0.4700	0.4500	0.0000	1.0000
408	Trapezoidal Force	Global Y	0.4500	0.4100	0.0000	1.0000
409	Trapezoidal Force	Global Y	0.4100	0.3900	0.0000	1.0000
410	Trapezoidal Force	Global Y	0.3900	0.3700	0.0000	1.0000
411	Trapezoidal Force	Global Y	0.3700	0.3500	0.0000	1.0000
412	Trapezoidal Force	Global Y	0.3500	0.3400	0.0000	1.0000
413	Trapezoidal Force	Global Y	0.3400	0.3200	0.0000	1.0000
106	Point Force	Global Y	0.8500		0.0000	
111	Point Force	Global Y	0.6200		0.0000	
116	Point Force	Global Y	0.6200		0.0000	
121	Point Force	Global Y	0.6200		0.0000	
126	Point Force	Global Y	0.6200		0.0000	
136	Point Force	Global Y	0.6200		0.0000	

LOAD CASE WS_ 0 deg, Member Loads

Member	Type	Direction	Magnitude at Start (kips or kips-ft)	Magnitude at End (kips or kips-ft)	Start Position (x/L)	End Position from start (x/L)
141	Point Force	Global Y	0.6200		0.0000	
146	Point Force	Global Y	0.6200		0.0000	
151	Point Force	Global Y	0.6200		0.0000	
156	Point Force	Global Y	0.6200		0.0000	

LOAD CASE WS_60 deg, Member Loads

Member	Type	Direction	Magnitude at Start (kips or kips-ft)	Magnitude at End (kips or kips-ft)	Start Position (x/L)	End Position from start (x/L)
1	Uniform Force	Global Y	0.1200		0.0000	1.0000
2	Uniform Force	Global Y	0.1200		0.0000	1.0000
3	Uniform Force	Global Y	0.1200		0.0000	1.0000
4	Uniform Force	Global Y	0.1200		0.0000	1.0000
5	Uniform Force	Global Y	0.1200		0.0000	1.0000
6	Uniform Force	Global Y	0.1200		0.0000	1.0000
7	Uniform Force	Global Y	0.1200		0.0000	1.0000
8	Uniform Force	Global Y	0.1200		0.0000	1.0000
9	Uniform Force	Global Y	0.1200		0.0000	1.0000
10	Uniform Force	Global Y	0.1200		0.0000	1.0000
11	Uniform Force	Global Y	0.1200		0.0000	1.0000
12	Uniform Force	Global Y	0.1200		0.0000	1.0000
13	Uniform Force	Global Y	0.1200		0.0000	1.0000
14	Uniform Force	Global Y	0.1200		0.0000	1.0000
15	Uniform Force	Global Y	0.1200		0.0000	1.0000
16	Uniform Force	Global Y	0.1200		0.0000	1.0000
17	Uniform Force	Global Y	0.1200		0.0000	1.0000
18	Uniform Force	Global Y	0.1200		0.0000	1.0000
19	Uniform Force	Global Y	0.1200		0.0000	1.0000
20	Uniform Force	Global Y	0.1200		0.0000	1.0000
21	Uniform Force	Global Y	0.1200		0.0000	1.0000
22	Uniform Force	Global Y	0.1200		0.0000	1.0000
23	Uniform Force	Global Y	0.1200		0.0000	1.0000
24	Uniform Force	Global Y	0.1200		0.0000	1.0000
25	Uniform Force	Global Y	0.1200		0.0000	1.0000

LOAD CASE WS 60 deg, Member Loads

Member	Type	Direction	Magnitude at Start (kips or kips-ft)	Magnitude at End (kips or kips-ft)	Start Position (x/L)	End Position from start (x/L)
26	Uniform Force	Global Y	0.1200		0.0000	1.0000
27	Uniform Force	Global Y	0.1200		0.0000	1.0000
28	Uniform Force	Global Y	0.1200		0.0000	1.0000
29	Uniform Force	Global Y	0.1200		0.0000	1.0000
30	Uniform Force	Global Y	0.1200		0.0000	1.0000
31	Uniform Force	Global Y	0.1200		0.0000	1.0000
32	Uniform Force	Global Y	0.1200		0.0000	1.0000
33	Uniform Force	Global Y	0.1200		0.0000	1.0000
34	Uniform Force	Global Y	0.1200		0.0000	1.0000
35	Uniform Force	Global Y	0.1200		0.0000	1.0000
36	Uniform Force	Global Y	0.1200		0.0000	1.0000
37	Uniform Force	Global Y	0.1200		0.0000	1.0000
38	Uniform Force	Global Y	0.1200		0.0000	1.0000
39	Uniform Force	Global Y	0.1200		0.0000	1.0000
40	Uniform Force	Global Y	0.1200		0.0000	1.0000
41	Uniform Force	Global Y	0.1200		0.0000	1.0000
42	Uniform Force	Global Y	0.1200		0.0000	1.0000
43	Uniform Force	Global Y	0.1200		0.0000	1.0000
44	Uniform Force	Global Y	0.1200		0.0000	1.0000
45	Uniform Force	Global Y	0.1200		0.0000	1.0000
46	Uniform Force	Global Y	0.1200		0.0000	1.0000
47	Uniform Force	Global Y	0.1200		0.0000	1.0000
48	Uniform Force	Global Y	0.1200		0.0000	1.0000
49	Uniform Force	Global Y	0.1200		0.0000	1.0000
50	Uniform Force	Global Y	0.1200		0.0000	1.0000
51	Uniform Force	Global Y	0.1200		0.0000	1.0000
52	Uniform Force	Global Y	0.1200		0.0000	1.0000
53	Uniform Force	Global Y	0.1200		0.0000	1.0000
54	Uniform Force	Global Y	0.1200		0.0000	1.0000
55	Uniform Force	Global Y	0.1200		0.0000	1.0000
56	Uniform Force	Global Y	0.1200		0.0000	1.0000
57	Uniform Force	Global Y	0.1200		0.0000	1.0000
101	Uniform Force	Global Y	0.0420		0.0000	1.0000
102	Uniform Force	Global Y	0.0420		0.0000	1.0000

LOAD CASE WS 60 deg, Member Loads

Member	Type	Direction	Magnitude at Start (kips or kips-ft)	Magnitude at End (kips or kips-ft)	Start Position (x/L)	End Position from start (x/L)
103	Uniform Force	Global Y	0.0420		0.0000	1.0000
104	Uniform Force	Global Y	0.0420		0.0000	1.0000
105	Uniform Force	Global Y	0.0420		0.0000	1.0000
106	Uniform Force	Global Y	0.0420		0.0000	1.0000
107	Uniform Force	Global Y	0.0420		0.0000	1.0000
108	Uniform Force	Global Y	0.0420		0.0000	1.0000
109	Uniform Force	Global Y	0.0420		0.0000	1.0000
110	Uniform Force	Global Y	0.0420		0.0000	1.0000
111	Uniform Force	Global Y	0.0420		0.0000	1.0000
112	Uniform Force	Global Y	0.0420		0.0000	1.0000
113	Uniform Force	Global Y	0.0420		0.0000	1.0000
114	Uniform Force	Global Y	0.0420		0.0000	1.0000
115	Uniform Force	Global Y	0.0420		0.0000	1.0000
116	Uniform Force	Global Y	0.0420		0.0000	1.0000
117	Uniform Force	Global Y	0.0420		0.0000	1.0000
118	Uniform Force	Global Y	0.0420		0.0000	1.0000
119	Uniform Force	Global Y	0.0420		0.0000	1.0000
120	Uniform Force	Global Y	0.0420		0.0000	1.0000
121	Uniform Force	Global Y	0.0420		0.0000	1.0000
122	Uniform Force	Global Y	0.0420		0.0000	1.0000
123	Uniform Force	Global Y	0.0420		0.0000	1.0000
124	Uniform Force	Global Y	0.0420		0.0000	1.0000
125	Uniform Force	Global Y	0.0420		0.0000	1.0000
126	Uniform Force	Global Y	0.0420		0.0000	1.0000
127	Uniform Force	Global Y	0.0420		0.0000	1.0000
128	Uniform Force	Global Y	0.0420		0.0000	1.0000
129	Uniform Force	Global Y	0.0420		0.0000	1.0000
130	Uniform Force	Global Y	0.0420		0.0000	1.0000
131	Uniform Force	Global Y	0.0420		0.0000	1.0000
132	Uniform Force	Global Y	0.0420		0.0000	1.0000
133	Uniform Force	Global Y	0.0420		0.0000	1.0000
134	Uniform Force	Global Y	0.0420		0.0000	1.0000
135	Uniform Force	Global Y	0.0420		0.0000	1.0000
136	Uniform Force	Global Y	0.0420		0.0000	1.0000

LOAD CASE WS 60 deg, Member Loads

Member	Type	Direction	Magnitude at Start (kips or kips-ft)	Magnitude at End (kips or kips-ft)	Start Position (x/L)	End Position from start (x/L)
137	Uniform Force	Global Y	0.0420		0.0000	1.0000
138	Uniform Force	Global Y	0.0420		0.0000	1.0000
139	Uniform Force	Global Y	0.0420		0.0000	1.0000
140	Uniform Force	Global Y	0.0420		0.0000	1.0000
141	Uniform Force	Global Y	0.0420		0.0000	1.0000
142	Uniform Force	Global Y	0.0420		0.0000	1.0000
143	Uniform Force	Global Y	0.0420		0.0000	1.0000
144	Uniform Force	Global Y	0.0420		0.0000	1.0000
145	Uniform Force	Global Y	0.0420		0.0000	1.0000
146	Uniform Force	Global Y	0.0420		0.0000	1.0000
147	Uniform Force	Global Y	0.0420		0.0000	1.0000
148	Uniform Force	Global Y	0.0420		0.0000	1.0000
149	Uniform Force	Global Y	0.0420		0.0000	1.0000
150	Uniform Force	Global Y	0.0420		0.0000	1.0000
151	Uniform Force	Global Y	0.0420		0.0000	1.0000
152	Uniform Force	Global Y	0.0420		0.0000	1.0000
153	Uniform Force	Global Y	0.0420		0.0000	1.0000
154	Uniform Force	Global Y	0.0420		0.0000	1.0000
155	Uniform Force	Global Y	0.0420		0.0000	1.0000
156	Uniform Force	Global Y	0.0420		0.0000	1.0000
157	Uniform Force	Global Y	0.0420		0.0000	1.0000
158	Uniform Force	Global Y	0.0420		0.0000	1.0000
159	Uniform Force	Global Y	0.0420		0.0000	1.0000
160	Uniform Force	Global Y	0.0420		0.0000	1.0000
701	Uniform Force	Global Y	0.0380		0.0000	1.0000
702	Uniform Force	Global Y	0.0380		0.0000	1.0000
703	Uniform Force	Global Y	0.0380		0.0000	1.0000
704	Uniform Force	Global Y	0.0380		0.0000	1.0000
705	Uniform Force	Global Y	0.0380		0.0000	1.0000
706	Uniform Force	Global Y	0.0380		0.0000	1.0000
707	Uniform Force	Global Y	0.0380		0.0000	1.0000
708	Uniform Force	Global Y	0.0380		0.0000	1.0000
709	Uniform Force	Global Y	0.0380		0.0000	1.0000
710	Uniform Force	Global Y	0.0380		0.0000	1.0000

LOAD CASE WS 60 deg, Member Loads

Member	Type	Direction	Magnitude at Start (kips or kips-ft)	Magnitude at End (kips or kips-ft)	Start Position (x/L)	End Position from start (x/L)
711	Uniform Force	Global Y	0.0380		0.0000	1.0000
712	Uniform Force	Global Y	0.0380		0.0000	1.0000
713	Uniform Force	Global Y	0.0380		0.0000	1.0000
714	Uniform Force	Global Y	0.0380		0.0000	1.0000
715	Uniform Force	Global Y	0.0380		0.0000	1.0000
716	Uniform Force	Global Y	0.0380		0.0000	1.0000
717	Uniform Force	Global Y	0.0380		0.0000	1.0000
718	Uniform Force	Global Y	0.0380		0.0000	1.0000
719	Uniform Force	Global Y	0.0380		0.0000	1.0000
720	Uniform Force	Global Y	0.0380		0.0000	1.0000
721	Uniform Force	Global Y	0.0380		0.0000	1.0000
722	Uniform Force	Global Y	0.0380		0.0000	1.0000
723	Uniform Force	Global Y	0.0380		0.0000	1.0000
724	Uniform Force	Global Y	0.0380		0.0000	1.0000
725	Uniform Force	Global Y	0.0380		0.0000	1.0000
726	Uniform Force	Global Y	0.0380		0.0000	1.0000
727	Uniform Force	Global Y	0.0380		0.0000	1.0000
728	Uniform Force	Global Y	0.0380		0.0000	1.0000
729	Uniform Force	Global Y	0.0380		0.0000	1.0000
730	Uniform Force	Global Y	0.0380		0.0000	1.0000
731	Uniform Force	Global Y	0.0380		0.0000	1.0000
732	Uniform Force	Global Y	0.0380		0.0000	1.0000
733	Uniform Force	Global Y	0.0380		0.0000	1.0000
740	Uniform Force	Global Y	0.0380		0.0000	1.0000
741	Uniform Force	Global Y	0.0380		0.0000	1.0000
742	Uniform Force	Global Y	0.0380		0.0000	1.0000
743	Uniform Force	Global Y	0.0380		0.0000	1.0000
744	Uniform Force	Global Y	0.0380		0.0000	1.0000
745	Uniform Force	Global Y	0.0380		0.0000	1.0000
746	Uniform Force	Global Y	0.0380		0.0000	1.0000
747	Uniform Force	Global Y	0.0380		0.0000	1.0000
748	Uniform Force	Global Y	0.0380		0.0000	1.0000
749	Uniform Force	Global Y	0.0380		0.0000	1.0000
750	Uniform Force	Global Y	0.0380		0.0000	1.0000

LOAD CASE WS 60 deg, Member Loads

Member	Type	Direction	Magnitude at Start (kips or kips-ft)	Magnitude at End (kips or kips-ft)	Start Position (x/L)	End Position from start (x/L)
751	Uniform Force	Global Y	0.0380		0.0000	1.0000
752	Uniform Force	Global Y	0.0380		0.0000	1.0000
753	Uniform Force	Global Y	0.0380		0.0000	1.0000
754	Uniform Force	Global Y	0.0380		0.0000	1.0000
755	Uniform Force	Global Y	0.0380		0.0000	1.0000
756	Uniform Force	Global Y	0.0380		0.0000	1.0000
757	Uniform Force	Global Y	0.0380		0.0000	1.0000
758	Uniform Force	Global Y	0.0380		0.0000	1.0000
759	Uniform Force	Global Y	0.0380		0.0000	1.0000
760	Uniform Force	Global Y	0.0380		0.0000	1.0000
761	Uniform Force	Global Y	0.0380		0.0000	1.0000
762	Uniform Force	Global Y	0.0380		0.0000	1.0000
763	Uniform Force	Global Y	0.0380		0.0000	1.0000
764	Uniform Force	Global Y	0.0380		0.0000	1.0000
765	Uniform Force	Global Y	0.0380		0.0000	1.0000
766	Uniform Force	Global Y	0.0380		0.0000	1.0000
767	Uniform Force	Global Y	0.0380		0.0000	1.0000
768	Uniform Force	Global Y	0.0380		0.0000	1.0000
769	Uniform Force	Global Y	0.0380		0.0000	1.0000
770	Uniform Force	Global Y	0.0380		0.0000	1.0000
771	Uniform Force	Global Y	0.0380		0.0000	1.0000
772	Uniform Force	Global Y	0.0380		0.0000	1.0000
1	Uniform Moment	Local x	-0.3100		0.0000	1.0000
2	Uniform Moment	Local x	-0.3100		0.0000	1.0000
3	Uniform Moment	Local x	-0.3100		0.0000	1.0000
4	Uniform Moment	Local x	-0.3100		0.0000	1.0000
5	Uniform Moment	Local x	-0.3100		0.0000	1.0000
6	Uniform Moment	Local x	-0.3100		0.0000	1.0000
7	Uniform Moment	Local x	-0.3100		0.0000	1.0000
8	Uniform Moment	Local x	-0.3100		0.0000	1.0000
9	Uniform Moment	Local x	-0.3100		0.0000	1.0000
10	Uniform Moment	Local x	-0.3100		0.0000	1.0000
11	Uniform Moment	Local x	-0.3100		0.0000	1.0000
12	Uniform Moment	Local x	-0.3100		0.0000	1.0000

LOAD CASE WS 60 deg, Member Loads

Member	Type	Direction	Magnitude at Start (kips or kips-ft)	Magnitude at End (kips or kips-ft)	Start Position (x/L)	End Position from start (x/L)
13	Uniform Moment	Local x	-0.3100		0.0000	1.0000
14	Uniform Moment	Local x	-0.3100		0.0000	1.0000
15	Uniform Moment	Local x	-0.3100		0.0000	1.0000
16	Uniform Moment	Local x	-0.3100		0.0000	1.0000
17	Uniform Moment	Local x	-0.3100		0.0000	1.0000
18	Uniform Moment	Local x	-0.3100		0.0000	1.0000
19	Uniform Moment	Local x	-0.3100		0.0000	1.0000
20	Uniform Moment	Local x	-0.3100		0.0000	1.0000
21	Uniform Moment	Local x	-0.3100		0.0000	1.0000
22	Uniform Moment	Local x	-0.3100		0.0000	1.0000
23	Uniform Moment	Local x	-0.3100		0.0000	1.0000
24	Uniform Moment	Local x	-0.3100		0.0000	1.0000
25	Uniform Moment	Local x	-0.3100		0.0000	1.0000
26	Uniform Moment	Local x	-0.3100		0.0000	1.0000
27	Uniform Moment	Local x	-0.3100		0.0000	1.0000
28	Uniform Moment	Local x	-0.3100		0.0000	1.0000
29	Uniform Moment	Local x	-0.3100		0.0000	1.0000
30	Uniform Moment	Local x	-0.3100		0.0000	1.0000
31	Uniform Moment	Local x	-0.3100		0.0000	1.0000
32	Uniform Moment	Local x	-0.3100		0.0000	1.0000
33	Uniform Moment	Local x	-0.3100		0.0000	1.0000
34	Uniform Moment	Local x	-0.3100		0.0000	1.0000
35	Uniform Moment	Local x	-0.3100		0.0000	1.0000
36	Uniform Moment	Local x	-0.3100		0.0000	1.0000
37	Uniform Moment	Local x	-0.3100		0.0000	1.0000
38	Uniform Moment	Local x	-0.3100		0.0000	1.0000
39	Uniform Moment	Local x	-0.3100		0.0000	1.0000
40	Uniform Moment	Local x	-0.3100		0.0000	1.0000
41	Uniform Moment	Local x	-0.3100		0.0000	1.0000
42	Uniform Moment	Local x	-0.3100		0.0000	1.0000
43	Uniform Moment	Local x	-0.3100		0.0000	1.0000
44	Uniform Moment	Local x	-0.3100		0.0000	1.0000
45	Uniform Moment	Local x	-0.3100		0.0000	1.0000
46	Uniform Moment	Local x	-0.3100		0.0000	1.0000

LOAD CASE WS 60 deg, Member Loads

Member	Type	Direction	Magnitude at Start (kips or kips-ft)	Magnitude at End (kips or kips-ft)	Start Position (x/L)	End Position from start (x/L)
47	Uniform Moment	Local x	-0.3100		0.0000	1.0000
48	Uniform Moment	Local x	-0.3100		0.0000	1.0000
49	Uniform Moment	Local x	-0.3100		0.0000	1.0000
50	Uniform Moment	Local x	-0.3100		0.0000	1.0000
51	Uniform Moment	Local x	-0.3100		0.0000	1.0000
52	Uniform Moment	Local x	-0.3100		0.0000	1.0000
53	Uniform Moment	Local x	-0.3100		0.0000	1.0000
54	Uniform Moment	Local x	-0.3100		0.0000	1.0000
55	Uniform Moment	Local x	-0.3100		0.0000	1.0000
56	Uniform Moment	Local x	-0.3100		0.0000	1.0000
57	Uniform Moment	Local x	-0.3100		0.0000	1.0000
1	Uniform Force	Local x	0.2500		0.0000	1.0000
2	Uniform Force	Local x	0.2500		0.0000	1.0000
3	Uniform Force	Local x	0.2500		0.0000	1.0000
4	Uniform Force	Local x	0.2500		0.0000	1.0000
5	Uniform Force	Local x	0.2500		0.0000	1.0000
6	Uniform Force	Local x	0.2500		0.0000	1.0000
7	Uniform Force	Local x	0.2500		0.0000	1.0000
8	Uniform Force	Local x	0.2500		0.0000	1.0000
9	Uniform Force	Local x	0.2500		0.0000	1.0000
10	Uniform Force	Local x	0.2500		0.0000	1.0000
11	Uniform Force	Local x	0.2500		0.0000	1.0000
12	Uniform Force	Local x	0.2500		0.0000	1.0000
13	Uniform Force	Local x	0.2500		0.0000	1.0000
14	Uniform Force	Local x	0.2500		0.0000	1.0000
15	Uniform Force	Local x	0.2500		0.0000	1.0000
16	Uniform Force	Local x	0.2500		0.0000	1.0000
17	Uniform Force	Local x	0.2500		0.0000	1.0000
18	Uniform Force	Local x	0.2500		0.0000	1.0000
19	Uniform Force	Local x	0.2500		0.0000	1.0000
20	Uniform Force	Local x	0.2500		0.0000	1.0000
21	Uniform Force	Local x	0.2500		0.0000	1.0000
22	Uniform Force	Local x	0.2500		0.0000	1.0000
23	Uniform Force	Local x	0.2500		0.0000	1.0000

LOAD CASE WS 60 deg, Member Loads

Member	Type	Direction	Magnitude at Start (kips or kips-ft)	Magnitude at End (kips or kips-ft)	Start Position (x/L)	End Position from start (x/L)
24	Uniform Force	Local x	0.2500		0.0000	1.0000
25	Uniform Force	Local x	0.2500		0.0000	1.0000
26	Uniform Force	Local x	0.2500		0.0000	1.0000
27	Uniform Force	Local x	0.2500		0.0000	1.0000
28	Uniform Force	Local x	0.2500		0.0000	1.0000
29	Uniform Force	Local x	0.2500		0.0000	1.0000
30	Uniform Force	Local x	0.2500		0.0000	1.0000
31	Uniform Force	Local x	0.2500		0.0000	1.0000
32	Uniform Force	Local x	0.2500		0.0000	1.0000
33	Uniform Force	Local x	0.2500		0.0000	1.0000
34	Uniform Force	Local x	0.2500		0.0000	1.0000
35	Uniform Force	Local x	0.2500		0.0000	1.0000
36	Uniform Force	Local x	0.2500		0.0000	1.0000
37	Uniform Force	Local x	0.2500		0.0000	1.0000
38	Uniform Force	Local x	0.2500		0.0000	1.0000
39	Uniform Force	Local x	0.2500		0.0000	1.0000
40	Uniform Force	Local x	0.2500		0.0000	1.0000
41	Uniform Force	Local x	0.2500		0.0000	1.0000
42	Uniform Force	Local x	0.2500		0.0000	1.0000
43	Uniform Force	Local x	0.2500		0.0000	1.0000
44	Uniform Force	Local x	0.2500		0.0000	1.0000
45	Uniform Force	Local x	0.2500		0.0000	1.0000
46	Uniform Force	Local x	0.2500		0.0000	1.0000
47	Uniform Force	Local x	0.2500		0.0000	1.0000
48	Uniform Force	Local x	0.2500		0.0000	1.0000
49	Uniform Force	Local x	0.2500		0.0000	1.0000
50	Uniform Force	Local x	0.2500		0.0000	1.0000
51	Uniform Force	Local x	0.2500		0.0000	1.0000
52	Uniform Force	Local x	0.2500		0.0000	1.0000
53	Uniform Force	Local x	0.2500		0.0000	1.0000
54	Uniform Force	Local x	0.2500		0.0000	1.0000
55	Uniform Force	Local x	0.2500		0.0000	1.0000
56	Uniform Force	Local x	0.2500		0.0000	1.0000
57	Uniform Force	Local x	0.2500		0.0000	1.0000

LOAD CASE WS 60 deg, Member Loads

Member	Type	Direction	Magnitude at Start (kips or kips-ft)	Magnitude at End (kips or kips-ft)	Start Position (x/L)	End Position from start (x/L)
101	Uniform Force	Local x	0.0870		0.0000	1.0000
102	Uniform Force	Local x	0.0870		0.0000	1.0000
103	Uniform Force	Local x	0.0870		0.0000	1.0000
104	Uniform Force	Local x	0.0870		0.0000	1.0000
105	Uniform Force	Local x	0.0870		0.0000	1.0000
106	Uniform Force	Local x	0.0870		0.0000	1.0000
107	Uniform Force	Local x	0.0870		0.0000	1.0000
108	Uniform Force	Local x	0.0870		0.0000	1.0000
109	Uniform Force	Local x	0.0870		0.0000	1.0000
110	Uniform Force	Local x	0.0870		0.0000	1.0000
111	Uniform Force	Local x	0.0870		0.0000	1.0000
112	Uniform Force	Local x	0.0870		0.0000	1.0000
113	Uniform Force	Local x	0.0870		0.0000	1.0000
114	Uniform Force	Local x	0.0870		0.0000	1.0000
115	Uniform Force	Local x	0.0870		0.0000	1.0000
116	Uniform Force	Local x	0.0870		0.0000	1.0000
117	Uniform Force	Local x	0.0870		0.0000	1.0000
118	Uniform Force	Local x	0.0870		0.0000	1.0000
119	Uniform Force	Local x	0.0870		0.0000	1.0000
120	Uniform Force	Local x	0.0870		0.0000	1.0000
121	Uniform Force	Local x	0.0870		0.0000	1.0000
122	Uniform Force	Local x	0.0870		0.0000	1.0000
123	Uniform Force	Local x	0.0870		0.0000	1.0000
124	Uniform Force	Local x	0.0870		0.0000	1.0000
125	Uniform Force	Local x	0.0870		0.0000	1.0000
126	Uniform Force	Local x	0.0870		0.0000	1.0000
127	Uniform Force	Local x	0.0870		0.0000	1.0000
128	Uniform Force	Local x	0.0870		0.0000	1.0000
129	Uniform Force	Local x	0.0870		0.0000	1.0000
130	Uniform Force	Local x	0.0870		0.0000	1.0000
131	Uniform Force	Local x	0.0870		0.0000	1.0000
132	Uniform Force	Local x	0.0870		0.0000	1.0000
133	Uniform Force	Local x	0.0870		0.0000	1.0000
134	Uniform Force	Local x	0.0870		0.0000	1.0000

LOAD CASE WS 60 deg, Member Loads

Member	Type	Direction	Magnitude at Start (kips or kips-ft)	Magnitude at End (kips or kips-ft)	Start Position (x/L)	End Position from start (x/L)
135	Uniform Force	Local x	0.0870		0.0000	1.0000
136	Uniform Force	Local x	0.0870		0.0000	1.0000
137	Uniform Force	Local x	0.0870		0.0000	1.0000
138	Uniform Force	Local x	0.0870		0.0000	1.0000
139	Uniform Force	Local x	0.0870		0.0000	1.0000
140	Uniform Force	Local x	0.0870		0.0000	1.0000
141	Uniform Force	Local x	0.0870		0.0000	1.0000
142	Uniform Force	Local x	0.0870		0.0000	1.0000
143	Uniform Force	Local x	0.0870		0.0000	1.0000
144	Uniform Force	Local x	0.0870		0.0000	1.0000
145	Uniform Force	Local x	0.0870		0.0000	1.0000
146	Uniform Force	Local x	0.0870		0.0000	1.0000
147	Uniform Force	Local x	0.0870		0.0000	1.0000
148	Uniform Force	Local x	0.0870		0.0000	1.0000
149	Uniform Force	Local x	0.0870		0.0000	1.0000
150	Uniform Force	Local x	0.0870		0.0000	1.0000
151	Uniform Force	Local x	0.0870		0.0000	1.0000
152	Uniform Force	Local x	0.0870		0.0000	1.0000
153	Uniform Force	Local x	0.0870		0.0000	1.0000
154	Uniform Force	Local x	0.0870		0.0000	1.0000
155	Uniform Force	Local x	0.0870		0.0000	1.0000
156	Uniform Force	Local x	0.0870		0.0000	1.0000
157	Uniform Force	Local x	0.0870		0.0000	1.0000
158	Uniform Force	Local x	0.0870		0.0000	1.0000
159	Uniform Force	Local x	0.0870		0.0000	1.0000
160	Uniform Force	Local x	0.0870		0.0000	1.0000
701	Uniform Force	Global X	0.0800		0.0000	1.0000
702	Uniform Force	Global X	0.0800		0.0000	1.0000
703	Uniform Force	Global X	0.0800		0.0000	1.0000
704	Uniform Force	Global X	0.0800		0.0000	1.0000
705	Uniform Force	Global X	0.0800		0.0000	1.0000
706	Uniform Force	Global X	0.0800		0.0000	1.0000
707	Uniform Force	Global X	0.0800		0.0000	1.0000
708	Uniform Force	Global X	0.0800		0.0000	1.0000

LOAD CASE WS 60 deg, Member Loads

Member	Type	Direction	Magnitude at Start (kips or kips-ft)	Magnitude at End (kips or kips-ft)	Start Position (x/L)	End Position from start (x/L)
709	Uniform Force	Global X	0.0800		0.0000	1.0000
710	Uniform Force	Global X	0.0800		0.0000	1.0000
711	Uniform Force	Global X	0.0800		0.0000	1.0000
712	Uniform Force	Global X	0.0800		0.0000	1.0000
713	Uniform Force	Global X	0.0800		0.0000	1.0000
714	Uniform Force	Global X	0.0800		0.0000	1.0000
715	Uniform Force	Global X	0.0800		0.0000	1.0000
716	Uniform Force	Global X	0.0800		0.0000	1.0000
717	Uniform Force	Global X	0.0800		0.0000	1.0000
718	Uniform Force	Global X	0.0800		0.0000	1.0000
719	Uniform Force	Global X	0.0800		0.0000	1.0000
720	Uniform Force	Global X	0.0800		0.0000	1.0000
721	Uniform Force	Global X	0.0800		0.0000	1.0000
722	Uniform Force	Global X	0.0800		0.0000	1.0000
723	Uniform Force	Global X	0.0800		0.0000	1.0000
724	Uniform Force	Global X	0.0800		0.0000	1.0000
725	Uniform Force	Global X	0.0800		0.0000	1.0000
726	Uniform Force	Global X	0.0800		0.0000	1.0000
727	Uniform Force	Global X	0.0800		0.0000	1.0000
728	Uniform Force	Global X	0.0800		0.0000	1.0000
729	Uniform Force	Global X	0.0800		0.0000	1.0000
730	Uniform Force	Global X	0.0800		0.0000	1.0000
731	Uniform Force	Global X	0.0800		0.0000	1.0000
732	Uniform Force	Global X	0.0800		0.0000	1.0000
733	Uniform Force	Global X	0.0800		0.0000	1.0000
740	Uniform Force	Global X	0.0800		0.0000	1.0000
741	Uniform Force	Global X	0.0800		0.0000	1.0000
742	Uniform Force	Global X	0.0800		0.0000	1.0000
743	Uniform Force	Global X	0.0800		0.0000	1.0000
744	Uniform Force	Global X	0.0800		0.0000	1.0000
745	Uniform Force	Global X	0.0800		0.0000	1.0000
746	Uniform Force	Global X	0.0800		0.0000	1.0000
747	Uniform Force	Global X	0.0800		0.0000	1.0000
748	Uniform Force	Global X	0.0800		0.0000	1.0000

LOAD CASE WS 60 deg, Member Loads

Member	Type	Direction	Magnitude at Start (kips or kips-ft)	Magnitude at End (kips or kips-ft)	Start Position (x/L)	End Position from start (x/L)
749	Uniform Force	Global X	0.0800		0.0000	1.0000
750	Uniform Force	Global X	0.0800		0.0000	1.0000
751	Uniform Force	Global X	0.0800		0.0000	1.0000
752	Uniform Force	Global X	0.0800		0.0000	1.0000
753	Uniform Force	Global X	0.0800		0.0000	1.0000
754	Uniform Force	Global X	0.0800		0.0000	1.0000
755	Uniform Force	Global X	0.0800		0.0000	1.0000
756	Uniform Force	Global X	0.0800		0.0000	1.0000
757	Uniform Force	Global X	0.0800		0.0000	1.0000
758	Uniform Force	Global X	0.0800		0.0000	1.0000
759	Uniform Force	Global X	0.0800		0.0000	1.0000
760	Uniform Force	Global X	0.0800		0.0000	1.0000
761	Uniform Force	Global X	0.0800		0.0000	1.0000
762	Uniform Force	Global X	0.0800		0.0000	1.0000
763	Uniform Force	Global X	0.0800		0.0000	1.0000
764	Uniform Force	Global X	0.0800		0.0000	1.0000
765	Uniform Force	Global X	0.0800		0.0000	1.0000
766	Uniform Force	Global X	0.0800		0.0000	1.0000
767	Uniform Force	Global X	0.0800		0.0000	1.0000
768	Uniform Force	Global X	0.0800		0.0000	1.0000
769	Uniform Force	Global X	0.0800		0.0000	1.0000
770	Uniform Force	Global X	0.0800		0.0000	1.0000
771	Uniform Force	Global X	0.0800		0.0000	1.0000
772	Uniform Force	Global X	0.0800		0.0000	1.0000
2002	Uniform Force	Global Y	0.2010		0.0000	1.0000
2003	Uniform Force	Global Y	0.2010		0.0000	1.0000
2002	Trapezoidal Force	Global X	1.0500	0.8100	0.0000	1.0000
2003	Trapezoidal Force	Global X	0.8100	0.5800	0.0000	1.0000
1017	Uniform Force	Global Y	0.1680		0.0000	1.0000
1018	Uniform Force	Global Y	0.1680		0.0000	1.0000
1019	Uniform Force	Global Y	0.1680		0.0000	1.0000
1017	Uniform Force	Global X	0.1160		0.0000	1.0000
1018	Uniform Force	Global X	0.1160		0.0000	1.0000
1019	Uniform Force	Global X	0.1160		0.0000	1.0000

LOAD CASE WS 60 deg, Member Loads

Member	Type	Direction	Magnitude at Start (kips or kips-ft)	Magnitude at End (kips or kips-ft)	Start Position (x/L)	End Position from start (x/L)
1013	Uniform Force	Global Y	0.1680		0.0000	1.0000
1014	Uniform Force	Global Y	0.1680		0.0000	1.0000
1015	Uniform Force	Global Y	0.1680		0.0000	1.0000
1013	Uniform Force	Global X	0.1160		0.0000	1.0000
1014	Uniform Force	Global X	0.1160		0.0000	1.0000
1015	Uniform Force	Global X	0.1160		0.0000	1.0000
3017	Uniform Force	Global Y	0.1680		0.0000	1.0000
3018	Uniform Force	Global Y	0.1680		0.0000	1.0000
3019	Uniform Force	Global Y	0.1680		0.0000	1.0000
3017	Uniform Force	Global X	0.1160		0.0000	1.0000
3018	Uniform Force	Global X	0.1160		0.0000	1.0000
3019	Uniform Force	Global X	0.1160		0.0000	1.0000
3013	Uniform Force	Global Y	0.1680		0.0000	1.0000
3014	Uniform Force	Global Y	0.1680		0.0000	1.0000
3015	Uniform Force	Global Y	0.1680		0.0000	1.0000
3013	Uniform Force	Global X	0.1160		0.0000	1.0000
3014	Uniform Force	Global X	0.1160		0.0000	1.0000
3015	Uniform Force	Global X	0.1160		0.0000	1.0000
1006	Uniform Force	Global X	0.2900		0.0000	1.0000
1007	Uniform Force	Global X	0.2900		0.0000	1.0000
1008	Uniform Force	Global X	0.2900		0.0000	1.0000
1009	Uniform Force	Global X	0.2900		0.0000	1.0000
1010	Uniform Force	Global X	0.2900		0.0000	1.0000
1011	Uniform Force	Global X	0.2900		0.0000	1.0000
1012	Uniform Force	Global X	0.2900		0.0000	1.0000
3006	Uniform Force	Global X	0.2900		0.0000	1.0000
3007	Uniform Force	Global X	0.2900		0.0000	1.0000
3008	Uniform Force	Global X	0.2900		0.0000	1.0000
3009	Uniform Force	Global X	0.2900		0.0000	1.0000
3010	Uniform Force	Global X	0.2900		0.0000	1.0000
3011	Uniform Force	Global X	0.2900		0.0000	1.0000
3012	Uniform Force	Global X	0.2900		0.0000	1.0000
501	Uniform Force	Global Y	0.0480		0.0000	1.0000
502	Uniform Force	Global Y	0.0480		0.0000	1.0000

LOAD CASE WS 60 deg, Member Loads

Member	Type	Direction	Magnitude at Start (kips or kips-ft)	Magnitude at End (kips or kips-ft)	Start Position (x/L)	End Position from start (x/L)
503	Uniform Force	Global Y	0.0480		0.0000	1.0000
504	Uniform Force	Global Y	0.0480		0.0000	1.0000
505	Uniform Force	Global Y	0.0480		0.0000	1.0000
601	Uniform Force	Global Y	0.0480		0.0000	1.0000
602	Uniform Force	Global Y	0.0480		0.0000	1.0000
603	Uniform Force	Global Y	0.0480		0.0000	1.0000
604	Uniform Force	Global Y	0.0480		0.0000	1.0000
605	Uniform Force	Global Y	0.0480		0.0000	1.0000
401	Uniform Force	Global Y	0.2010		0.0000	1.0000
402	Uniform Force	Global Y	0.2010		0.0000	1.0000
403	Uniform Force	Global Y	0.2010		0.0000	1.0000
405	Trapezoidal Force	Global Y	0.2500	0.2400	0.0000	1.0000
406	Trapezoidal Force	Global Y	0.2400	0.2300	0.0000	1.0000
407	Trapezoidal Force	Global Y	0.2300	0.2200	0.0000	1.0000
408	Trapezoidal Force	Global Y	0.2200	0.2000	0.0000	1.0000
409	Trapezoidal Force	Global Y	0.2000	0.2000	0.0000	1.0000
410	Trapezoidal Force	Global Y	0.2000	0.1900	0.0000	1.0000
411	Trapezoidal Force	Global Y	0.1900	0.1800	0.0000	1.0000
412	Trapezoidal Force	Global Y	0.1800	0.1700	0.0000	1.0000
413	Trapezoidal Force	Global Y	0.1700	0.1600	0.0000	1.0000
501	Uniform Force	Global X	0.0840		0.0000	1.0000
502	Uniform Force	Global X	0.0840		0.0000	1.0000
503	Uniform Force	Global X	0.0840		0.0000	1.0000
504	Uniform Force	Global X	0.0840		0.0000	1.0000
505	Uniform Force	Global X	0.0840		0.0000	1.0000
601	Uniform Force	Global X	0.0840		0.0000	1.0000
602	Uniform Force	Global X	0.0840		0.0000	1.0000
603	Uniform Force	Global X	0.0840		0.0000	1.0000
604	Uniform Force	Global X	0.0840		0.0000	1.0000
605	Uniform Force	Global X	0.0840		0.0000	1.0000
401	Uniform Force	Global X	0.2900		0.0000	1.0000
402	Uniform Force	Global X	0.2900		0.0000	1.0000
403	Uniform Force	Global X	0.2900		0.0000	1.0000
405	Trapezoidal Force	Global X	0.4400	0.4200	0.0000	1.0000

LOAD CASE WS 60 deg, Member Loads

Member	Type	Direction	Magnitude at Start (kips or kips-ft)	Magnitude at End (kips or kips-ft)	Start Position (x/L)	End Position from start (x/L)
406	Trapezoidal Force	Global X	0.4200	0.4000	0.0000	1.0000
407	Trapezoidal Force	Global X	0.4000	0.3900	0.0000	1.0000
408	Trapezoidal Force	Global X	0.3900	0.3500	0.0000	1.0000
409	Trapezoidal Force	Global X	0.3500	0.3400	0.0000	1.0000
410	Trapezoidal Force	Global X	0.3400	0.3200	0.0000	1.0000
411	Trapezoidal Force	Global X	0.3200	0.3100	0.0000	1.0000
412	Trapezoidal Force	Global X	0.3100	0.2900	0.0000	1.0000
413	Trapezoidal Force	Global X	0.2900	0.2800	0.0000	1.0000

LOAD CASE WUP, Member Loads

Member	Type	Direction	Magnitude at Start (kips or kips-ft)	Magnitude at End (kips or kips-ft)	Start Position (x/L)	End Position from start (x/L)
1	Uniform Force	Global Z	0.6330		0.0000	1.0000
2	Uniform Force	Global Z	0.6330		0.0000	1.0000
3	Uniform Force	Global Z	0.6330		0.0000	1.0000
4	Uniform Force	Global Z	0.6330		0.0000	1.0000
5	Uniform Force	Global Z	0.6330		0.0000	1.0000
6	Uniform Force	Global Z	0.6330		0.0000	1.0000
7	Uniform Force	Global Z	0.6330		0.0000	1.0000
8	Uniform Force	Global Z	0.6330		0.0000	1.0000
9	Uniform Force	Global Z	0.6330		0.0000	1.0000
10	Uniform Force	Global Z	0.6330		0.0000	1.0000
11	Uniform Force	Global Z	0.6330		0.0000	1.0000
12	Uniform Force	Global Z	0.6330		0.0000	1.0000
13	Uniform Force	Global Z	0.6330		0.0000	1.0000
14	Uniform Force	Global Z	0.6330		0.0000	1.0000
15	Uniform Force	Global Z	0.6330		0.0000	1.0000
16	Uniform Force	Global Z	0.6330		0.0000	1.0000
17	Uniform Force	Global Z	0.6330		0.0000	1.0000
18	Uniform Force	Global Z	0.6330		0.0000	1.0000
19	Uniform Force	Global Z	0.6330		0.0000	1.0000
20	Uniform Force	Global Z	0.6330		0.0000	1.0000
21	Uniform Force	Global Z	0.6330		0.0000	1.0000

LOAD CASE WUP, Member Loads

Member	Type	Direction	Magnitude at Start (kips or kips-ft)	Magnitude at End (kips or kips-ft)	Start Position (x/L)	End Position from start (x/L)
22	Uniform Force	Global Z	0.6330		0.0000	1.0000
23	Uniform Force	Global Z	0.6330		0.0000	1.0000
24	Uniform Force	Global Z	0.6330		0.0000	1.0000
25	Uniform Force	Global Z	0.6330		0.0000	1.0000
26	Uniform Force	Global Z	0.6330		0.0000	1.0000
27	Uniform Force	Global Z	0.6330		0.0000	1.0000
28	Uniform Force	Global Z	0.6330		0.0000	1.0000
29	Uniform Force	Global Z	0.6330		0.0000	1.0000
30	Uniform Force	Global Z	0.6330		0.0000	1.0000
31	Uniform Force	Global Z	0.6330		0.0000	1.0000
32	Uniform Force	Global Z	0.6330		0.0000	1.0000
33	Uniform Force	Global Z	0.6330		0.0000	1.0000
34	Uniform Force	Global Z	0.6330		0.0000	1.0000
35	Uniform Force	Global Z	0.6330		0.0000	1.0000
36	Uniform Force	Global Z	0.6330		0.0000	1.0000
37	Uniform Force	Global Z	0.6330		0.0000	1.0000
38	Uniform Force	Global Z	0.6330		0.0000	1.0000
39	Uniform Force	Global Z	0.6330		0.0000	1.0000
40	Uniform Force	Global Z	0.6330		0.0000	1.0000
41	Uniform Force	Global Z	0.6330		0.0000	1.0000
42	Uniform Force	Global Z	0.6330		0.0000	1.0000
43	Uniform Force	Global Z	0.6330		0.0000	1.0000
44	Uniform Force	Global Z	0.6330		0.0000	1.0000
45	Uniform Force	Global Z	0.6330		0.0000	1.0000
46	Uniform Force	Global Z	0.6330		0.0000	1.0000
47	Uniform Force	Global Z	0.6330		0.0000	1.0000
48	Uniform Force	Global Z	0.6330		0.0000	1.0000
49	Uniform Force	Global Z	0.6330		0.0000	1.0000
50	Uniform Force	Global Z	0.6330		0.0000	1.0000
51	Uniform Force	Global Z	0.6330		0.0000	1.0000
52	Uniform Force	Global Z	0.6330		0.0000	1.0000
53	Uniform Force	Global Z	0.6330		0.0000	1.0000
54	Uniform Force	Global Z	0.6330		0.0000	1.0000
55	Uniform Force	Global Z	0.6330		0.0000	1.0000

LOAD CASE WUP, Member Loads

Member	Type	Direction	Magnitude at Start (kips or kips-ft)	Magnitude at End (kips or kips-ft)	Start Position (x/L)	End Position from start (x/L)
56	Uniform Force	Global Z	0.6330		0.0000	1.0000
57	Uniform Force	Global Z	0.6330		0.0000	1.0000
1	Uniform Moment	Local x	-5.0100		0.0000	1.0000
2	Uniform Moment	Local x	-5.0100		0.0000	1.0000
3	Uniform Moment	Local x	-5.0100		0.0000	1.0000
4	Uniform Moment	Local x	-5.0100		0.0000	1.0000
5	Uniform Moment	Local x	-5.0100		0.0000	1.0000
6	Uniform Moment	Local x	-5.0100		0.0000	1.0000
7	Uniform Moment	Local x	-5.0100		0.0000	1.0000
8	Uniform Moment	Local x	-5.0100		0.0000	1.0000
9	Uniform Moment	Local x	-5.0100		0.0000	1.0000
10	Uniform Moment	Local x	-5.0100		0.0000	1.0000
11	Uniform Moment	Local x	-5.0100		0.0000	1.0000
12	Uniform Moment	Local x	-5.0100		0.0000	1.0000
13	Uniform Moment	Local x	-5.0100		0.0000	1.0000
14	Uniform Moment	Local x	-5.0100		0.0000	1.0000
15	Uniform Moment	Local x	-5.0100		0.0000	1.0000
16	Uniform Moment	Local x	-5.0100		0.0000	1.0000
17	Uniform Moment	Local x	-5.0100		0.0000	1.0000
18	Uniform Moment	Local x	-5.0100		0.0000	1.0000
19	Uniform Moment	Local x	-5.0100		0.0000	1.0000
20	Uniform Moment	Local x	-5.0100		0.0000	1.0000
21	Uniform Moment	Local x	-5.0100		0.0000	1.0000
22	Uniform Moment	Local x	-5.0100		0.0000	1.0000
23	Uniform Moment	Local x	-5.0100		0.0000	1.0000
24	Uniform Moment	Local x	-5.0100		0.0000	1.0000
25	Uniform Moment	Local x	-5.0100		0.0000	1.0000
26	Uniform Moment	Local x	-5.0100		0.0000	1.0000
27	Uniform Moment	Local x	-5.0100		0.0000	1.0000
28	Uniform Moment	Local x	-5.0100		0.0000	1.0000
29	Uniform Moment	Local x	-5.0100		0.0000	1.0000
30	Uniform Moment	Local x	-5.0100		0.0000	1.0000
31	Uniform Moment	Local x	-5.0100		0.0000	1.0000
32	Uniform Moment	Local x	-5.0100		0.0000	1.0000

LOAD CASE WUP, Member Loads

Member	Type	Direction	Magnitude at Start (kips or kips-ft)	Magnitude at End (kips or kips-ft)	Start Position (x/L)	End Position from start (x/L)
33	Uniform Moment	Local x	-5.0100		0.0000	1.0000
34	Uniform Moment	Local x	-5.0100		0.0000	1.0000
35	Uniform Moment	Local x	-5.0100		0.0000	1.0000
36	Uniform Moment	Local x	-5.0100		0.0000	1.0000
37	Uniform Moment	Local x	-5.0100		0.0000	1.0000
38	Uniform Moment	Local x	-5.0100		0.0000	1.0000
39	Uniform Moment	Local x	-5.0100		0.0000	1.0000
40	Uniform Moment	Local x	-5.0100		0.0000	1.0000
41	Uniform Moment	Local x	-5.0100		0.0000	1.0000
42	Uniform Moment	Local x	-5.0100		0.0000	1.0000
43	Uniform Moment	Local x	-5.0100		0.0000	1.0000
44	Uniform Moment	Local x	-5.0100		0.0000	1.0000
45	Uniform Moment	Local x	-5.0100		0.0000	1.0000
46	Uniform Moment	Local x	-5.0100		0.0000	1.0000
47	Uniform Moment	Local x	-5.0100		0.0000	1.0000
48	Uniform Moment	Local x	-5.0100		0.0000	1.0000
49	Uniform Moment	Local x	-5.0100		0.0000	1.0000
50	Uniform Moment	Local x	-5.0100		0.0000	1.0000
51	Uniform Moment	Local x	-5.0100		0.0000	1.0000
52	Uniform Moment	Local x	-5.0100		0.0000	1.0000
53	Uniform Moment	Local x	-5.0100		0.0000	1.0000
54	Uniform Moment	Local x	-5.0100		0.0000	1.0000
55	Uniform Moment	Local x	-5.0100		0.0000	1.0000
56	Uniform Moment	Local x	-5.0100		0.0000	1.0000
57	Uniform Moment	Local x	-5.0100		0.0000	1.0000
101	Uniform Force	Global Z	0.3200		0.0000	1.0000
102	Uniform Force	Global Z	0.3200		0.0000	1.0000
103	Uniform Force	Global Z	0.3200		0.0000	1.0000
104	Uniform Force	Global Z	0.3200		0.0000	1.0000
105	Uniform Force	Global Z	0.3200		0.0000	1.0000
106	Uniform Force	Global Z	0.3200		0.0000	1.0000
107	Uniform Force	Global Z	0.3200		0.0000	1.0000
108	Uniform Force	Global Z	0.3200		0.0000	1.0000
109	Uniform Force	Global Z	0.3200		0.0000	1.0000

LOAD CASE WUP, Member Loads

Member	Type	Direction	Magnitude at Start (kips or kips-ft)	Magnitude at End (kips or kips-ft)	Start Position (x/L)	End Position from start (x/L)
110	Uniform Force	Global Z	0.3200		0.0000	1.0000
111	Uniform Force	Global Z	0.3200		0.0000	1.0000
112	Uniform Force	Global Z	0.3200		0.0000	1.0000
113	Uniform Force	Global Z	0.3200		0.0000	1.0000
114	Uniform Force	Global Z	0.3200		0.0000	1.0000
115	Uniform Force	Global Z	0.3200		0.0000	1.0000
116	Uniform Force	Global Z	0.3200		0.0000	1.0000
117	Uniform Force	Global Z	0.3200		0.0000	1.0000
118	Uniform Force	Global Z	0.3200		0.0000	1.0000
119	Uniform Force	Global Z	0.3200		0.0000	1.0000
120	Uniform Force	Global Z	0.3200		0.0000	1.0000
121	Uniform Force	Global Z	0.3200		0.0000	1.0000
122	Uniform Force	Global Z	0.3200		0.0000	1.0000
123	Uniform Force	Global Z	0.3200		0.0000	1.0000
124	Uniform Force	Global Z	0.3200		0.0000	1.0000
125	Uniform Force	Global Z	0.3200		0.0000	1.0000
126	Uniform Force	Global Z	0.3200		0.0000	1.0000
127	Uniform Force	Global Z	0.3200		0.0000	1.0000
128	Uniform Force	Global Z	0.3200		0.0000	1.0000
129	Uniform Force	Global Z	0.3200		0.0000	1.0000
130	Uniform Force	Global Z	0.3200		0.0000	1.0000
131	Uniform Force	Global Z	0.3200		0.0000	1.0000
132	Uniform Force	Global Z	0.3200		0.0000	1.0000
133	Uniform Force	Global Z	0.3200		0.0000	1.0000
134	Uniform Force	Global Z	0.3200		0.0000	1.0000
135	Uniform Force	Global Z	0.3200		0.0000	1.0000
136	Uniform Force	Global Z	0.3200		0.0000	1.0000
137	Uniform Force	Global Z	0.3200		0.0000	1.0000
138	Uniform Force	Global Z	0.3200		0.0000	1.0000
139	Uniform Force	Global Z	0.3200		0.0000	1.0000
140	Uniform Force	Global Z	0.3200		0.0000	1.0000
141	Uniform Force	Global Z	0.3200		0.0000	1.0000
142	Uniform Force	Global Z	0.3200		0.0000	1.0000
143	Uniform Force	Global Z	0.3200		0.0000	1.0000

LOAD CASE WUP, Member Loads

Member	Type	Direction	Magnitude at Start (kips or kips-ft)	Magnitude at End (kips or kips-ft)	Start Position (x/L)	End Position from start (x/L)
144	Uniform Force	Global Z	0.3200		0.0000	1.0000
145	Uniform Force	Global Z	0.3200		0.0000	1.0000
146	Uniform Force	Global Z	0.3200		0.0000	1.0000
147	Uniform Force	Global Z	0.3200		0.0000	1.0000
148	Uniform Force	Global Z	0.3200		0.0000	1.0000
149	Uniform Force	Global Z	0.3200		0.0000	1.0000
150	Uniform Force	Global Z	0.3200		0.0000	1.0000
151	Uniform Force	Global Z	0.3200		0.0000	1.0000
152	Uniform Force	Global Z	0.3200		0.0000	1.0000
153	Uniform Force	Global Z	0.3200		0.0000	1.0000
154	Uniform Force	Global Z	0.3200		0.0000	1.0000
155	Uniform Force	Global Z	0.3200		0.0000	1.0000
156	Uniform Force	Global Z	0.3200		0.0000	1.0000
157	Uniform Force	Global Z	0.3200		0.0000	1.0000
158	Uniform Force	Global Z	0.3200		0.0000	1.0000
159	Uniform Force	Global Z	0.3200		0.0000	1.0000
160	Uniform Force	Global Z	0.3200		0.0000	1.0000
101	Uniform Moment	Local x	-1.2800		0.0000	1.0000
102	Uniform Moment	Local x	-1.2800		0.0000	1.0000
103	Uniform Moment	Local x	-1.2800		0.0000	1.0000
104	Uniform Moment	Local x	-1.2800		0.0000	1.0000
105	Uniform Moment	Local x	-1.2800		0.0000	1.0000
106	Uniform Moment	Local x	-1.2800		0.0000	1.0000
107	Uniform Moment	Local x	-1.2800		0.0000	1.0000
108	Uniform Moment	Local x	-1.2800		0.0000	1.0000
109	Uniform Moment	Local x	-1.2800		0.0000	1.0000
110	Uniform Moment	Local x	-1.2800		0.0000	1.0000
111	Uniform Moment	Local x	-1.2800		0.0000	1.0000
112	Uniform Moment	Local x	-1.2800		0.0000	1.0000
113	Uniform Moment	Local x	-1.2800		0.0000	1.0000
114	Uniform Moment	Local x	-1.2800		0.0000	1.0000
115	Uniform Moment	Local x	-1.2800		0.0000	1.0000
116	Uniform Moment	Local x	-1.2800		0.0000	1.0000
117	Uniform Moment	Local x	-1.2800		0.0000	1.0000

LOAD CASE WUP, Member Loads

Member	Type	Direction	Magnitude at Start (kips or kips-ft)	Magnitude at End (kips or kips-ft)	Start Position (x/L)	End Position from start (x/L)
118	Uniform Moment	Local x	-1.2800		0.0000	1.0000
119	Uniform Moment	Local x	-1.2800		0.0000	1.0000
120	Uniform Moment	Local x	-1.2800		0.0000	1.0000
121	Uniform Moment	Local x	-1.2800		0.0000	1.0000
122	Uniform Moment	Local x	-1.2800		0.0000	1.0000
123	Uniform Moment	Local x	-1.2800		0.0000	1.0000
124	Uniform Moment	Local x	-1.2800		0.0000	1.0000
125	Uniform Moment	Local x	-1.2800		0.0000	1.0000
126	Uniform Moment	Local x	-1.2800		0.0000	1.0000
127	Uniform Moment	Local x	-1.2800		0.0000	1.0000
128	Uniform Moment	Local x	-1.2800		0.0000	1.0000
129	Uniform Moment	Local x	-1.2800		0.0000	1.0000
130	Uniform Moment	Local x	-1.2800		0.0000	1.0000
131	Uniform Moment	Local x	-1.2800		0.0000	1.0000
132	Uniform Moment	Local x	-1.2800		0.0000	1.0000
133	Uniform Moment	Local x	-1.2800		0.0000	1.0000
134	Uniform Moment	Local x	-1.2800		0.0000	1.0000
135	Uniform Moment	Local x	-1.2800		0.0000	1.0000
136	Uniform Moment	Local x	-1.2800		0.0000	1.0000
137	Uniform Moment	Local x	-1.2800		0.0000	1.0000
138	Uniform Moment	Local x	-1.2800		0.0000	1.0000
139	Uniform Moment	Local x	-1.2800		0.0000	1.0000
140	Uniform Moment	Local x	-1.2800		0.0000	1.0000
141	Uniform Moment	Local x	-1.2800		0.0000	1.0000
142	Uniform Moment	Local x	-1.2800		0.0000	1.0000
143	Uniform Moment	Local x	-1.2800		0.0000	1.0000
144	Uniform Moment	Local x	-1.2800		0.0000	1.0000
145	Uniform Moment	Local x	-1.2800		0.0000	1.0000
146	Uniform Moment	Local x	-1.2800		0.0000	1.0000
147	Uniform Moment	Local x	-1.2800		0.0000	1.0000
148	Uniform Moment	Local x	-1.2800		0.0000	1.0000
149	Uniform Moment	Local x	-1.2800		0.0000	1.0000
150	Uniform Moment	Local x	-1.2800		0.0000	1.0000
151	Uniform Moment	Local x	-1.2800		0.0000	1.0000

LOAD CASE WUP, Member Loads

Member	Type	Direction	Magnitude at Start (kips or kips-ft)	Magnitude at End (kips or kips-ft)	Start Position (x/L)	End Position from start (x/L)
152	Uniform Moment	Local x	-1.2800		0.0000	1.0000
153	Uniform Moment	Local x	-1.2800		0.0000	1.0000
154	Uniform Moment	Local x	-1.2800		0.0000	1.0000
155	Uniform Moment	Local x	-1.2800		0.0000	1.0000
156	Uniform Moment	Local x	-1.2800		0.0000	1.0000
157	Uniform Moment	Local x	-1.2800		0.0000	1.0000
158	Uniform Moment	Local x	-1.2800		0.0000	1.0000
159	Uniform Moment	Local x	-1.2800		0.0000	1.0000
160	Uniform Moment	Local x	-1.2800		0.0000	1.0000

LOAD CASE WS_-60 deg, Member Loads

Member	Type	Direction	Magnitude at Start (kips or kips-ft)	Magnitude at End (kips or kips-ft)	Start Position (x/L)	End Position from start (x/L)
1	Uniform Force	Global Y	0.1200		0.0000	1.0000
2	Uniform Force	Global Y	0.1200		0.0000	1.0000
3	Uniform Force	Global Y	0.1200		0.0000	1.0000
4	Uniform Force	Global Y	0.1200		0.0000	1.0000
5	Uniform Force	Global Y	0.1200		0.0000	1.0000
6	Uniform Force	Global Y	0.1200		0.0000	1.0000
7	Uniform Force	Global Y	0.1200		0.0000	1.0000
8	Uniform Force	Global Y	0.1200		0.0000	1.0000
9	Uniform Force	Global Y	0.1200		0.0000	1.0000
10	Uniform Force	Global Y	0.1200		0.0000	1.0000
11	Uniform Force	Global Y	0.1200		0.0000	1.0000
12	Uniform Force	Global Y	0.1200		0.0000	1.0000
13	Uniform Force	Global Y	0.1200		0.0000	1.0000
14	Uniform Force	Global Y	0.1200		0.0000	1.0000
15	Uniform Force	Global Y	0.1200		0.0000	1.0000
16	Uniform Force	Global Y	0.1200		0.0000	1.0000
17	Uniform Force	Global Y	0.1200		0.0000	1.0000
18	Uniform Force	Global Y	0.1200		0.0000	1.0000
19	Uniform Force	Global Y	0.1200		0.0000	1.0000
20	Uniform Force	Global Y	0.1200		0.0000	1.0000

LOAD CASE WS -60 deg, Member Loads

Member	Type	Direction	Magnitude at Start (kips or kips-ft)	Magnitude at End (kips or kips-ft)	Start Position (x/L)	End Position from start (x/L)
21	Uniform Force	Global Y	0.1200		0.0000	1.0000
22	Uniform Force	Global Y	0.1200		0.0000	1.0000
23	Uniform Force	Global Y	0.1200		0.0000	1.0000
24	Uniform Force	Global Y	0.1200		0.0000	1.0000
25	Uniform Force	Global Y	0.1200		0.0000	1.0000
26	Uniform Force	Global Y	0.1200		0.0000	1.0000
27	Uniform Force	Global Y	0.1200		0.0000	1.0000
28	Uniform Force	Global Y	0.1200		0.0000	1.0000
29	Uniform Force	Global Y	0.1200		0.0000	1.0000
30	Uniform Force	Global Y	0.1200		0.0000	1.0000
31	Uniform Force	Global Y	0.1200		0.0000	1.0000
32	Uniform Force	Global Y	0.1200		0.0000	1.0000
33	Uniform Force	Global Y	0.1200		0.0000	1.0000
34	Uniform Force	Global Y	0.1200		0.0000	1.0000
35	Uniform Force	Global Y	0.1200		0.0000	1.0000
36	Uniform Force	Global Y	0.1200		0.0000	1.0000
37	Uniform Force	Global Y	0.1200		0.0000	1.0000
38	Uniform Force	Global Y	0.1200		0.0000	1.0000
39	Uniform Force	Global Y	0.1200		0.0000	1.0000
40	Uniform Force	Global Y	0.1200		0.0000	1.0000
41	Uniform Force	Global Y	0.1200		0.0000	1.0000
42	Uniform Force	Global Y	0.1200		0.0000	1.0000
43	Uniform Force	Global Y	0.1200		0.0000	1.0000
44	Uniform Force	Global Y	0.1200		0.0000	1.0000
45	Uniform Force	Global Y	0.1200		0.0000	1.0000
46	Uniform Force	Global Y	0.1200		0.0000	1.0000
47	Uniform Force	Global Y	0.1200		0.0000	1.0000
48	Uniform Force	Global Y	0.1200		0.0000	1.0000
49	Uniform Force	Global Y	0.1200		0.0000	1.0000
50	Uniform Force	Global Y	0.1200		0.0000	1.0000
51	Uniform Force	Global Y	0.1200		0.0000	1.0000
52	Uniform Force	Global Y	0.1200		0.0000	1.0000
53	Uniform Force	Global Y	0.1200		0.0000	1.0000
54	Uniform Force	Global Y	0.1200		0.0000	1.0000

LOAD CASE WS -60 deg, Member Loads

Member	Type	Direction	Magnitude at Start (kips or kips-ft)	Magnitude at End (kips or kips-ft)	Start Position (x/L)	End Position from start (x/L)
55	Uniform Force	Global Y	0.1200		0.0000	1.0000
56	Uniform Force	Global Y	0.1200		0.0000	1.0000
57	Uniform Force	Global Y	0.1200		0.0000	1.0000
101	Uniform Force	Global Y	0.0420		0.0000	1.0000
102	Uniform Force	Global Y	0.0420		0.0000	1.0000
103	Uniform Force	Global Y	0.0420		0.0000	1.0000
104	Uniform Force	Global Y	0.0420		0.0000	1.0000
105	Uniform Force	Global Y	0.0420		0.0000	1.0000
106	Uniform Force	Global Y	0.0420		0.0000	1.0000
107	Uniform Force	Global Y	0.0420		0.0000	1.0000
108	Uniform Force	Global Y	0.0420		0.0000	1.0000
109	Uniform Force	Global Y	0.0420		0.0000	1.0000
110	Uniform Force	Global Y	0.0420		0.0000	1.0000
111	Uniform Force	Global Y	0.0420		0.0000	1.0000
112	Uniform Force	Global Y	0.0420		0.0000	1.0000
113	Uniform Force	Global Y	0.0420		0.0000	1.0000
114	Uniform Force	Global Y	0.0420		0.0000	1.0000
115	Uniform Force	Global Y	0.0420		0.0000	1.0000
116	Uniform Force	Global Y	0.0420		0.0000	1.0000
117	Uniform Force	Global Y	0.0420		0.0000	1.0000
118	Uniform Force	Global Y	0.0420		0.0000	1.0000
119	Uniform Force	Global Y	0.0420		0.0000	1.0000
120	Uniform Force	Global Y	0.0420		0.0000	1.0000
121	Uniform Force	Global Y	0.0420		0.0000	1.0000
122	Uniform Force	Global Y	0.0420		0.0000	1.0000
123	Uniform Force	Global Y	0.0420		0.0000	1.0000
124	Uniform Force	Global Y	0.0420		0.0000	1.0000
125	Uniform Force	Global Y	0.0420		0.0000	1.0000
126	Uniform Force	Global Y	0.0420		0.0000	1.0000
127	Uniform Force	Global Y	0.0420		0.0000	1.0000
128	Uniform Force	Global Y	0.0420		0.0000	1.0000
129	Uniform Force	Global Y	0.0420		0.0000	1.0000
130	Uniform Force	Global Y	0.0420		0.0000	1.0000
131	Uniform Force	Global Y	0.0420		0.0000	1.0000

LOAD CASE WS -60 deg, Member Loads

Member	Type	Direction	Magnitude at Start (kips or kips-ft)	Magnitude at End (kips or kips-ft)	Start Position (x/L)	End Position from start (x/L)
132	Uniform Force	Global Y	0.0420		0.0000	1.0000
133	Uniform Force	Global Y	0.0420		0.0000	1.0000
134	Uniform Force	Global Y	0.0420		0.0000	1.0000
135	Uniform Force	Global Y	0.0420		0.0000	1.0000
136	Uniform Force	Global Y	0.0420		0.0000	1.0000
137	Uniform Force	Global Y	0.0420		0.0000	1.0000
138	Uniform Force	Global Y	0.0420		0.0000	1.0000
139	Uniform Force	Global Y	0.0420		0.0000	1.0000
140	Uniform Force	Global Y	0.0420		0.0000	1.0000
141	Uniform Force	Global Y	0.0420		0.0000	1.0000
142	Uniform Force	Global Y	0.0420		0.0000	1.0000
143	Uniform Force	Global Y	0.0420		0.0000	1.0000
144	Uniform Force	Global Y	0.0420		0.0000	1.0000
145	Uniform Force	Global Y	0.0420		0.0000	1.0000
146	Uniform Force	Global Y	0.0420		0.0000	1.0000
147	Uniform Force	Global Y	0.0420		0.0000	1.0000
148	Uniform Force	Global Y	0.0420		0.0000	1.0000
149	Uniform Force	Global Y	0.0420		0.0000	1.0000
150	Uniform Force	Global Y	0.0420		0.0000	1.0000
151	Uniform Force	Global Y	0.0420		0.0000	1.0000
152	Uniform Force	Global Y	0.0420		0.0000	1.0000
153	Uniform Force	Global Y	0.0420		0.0000	1.0000
154	Uniform Force	Global Y	0.0420		0.0000	1.0000
155	Uniform Force	Global Y	0.0420		0.0000	1.0000
156	Uniform Force	Global Y	0.0420		0.0000	1.0000
157	Uniform Force	Global Y	0.0420		0.0000	1.0000
158	Uniform Force	Global Y	0.0420		0.0000	1.0000
159	Uniform Force	Global Y	0.0420		0.0000	1.0000
160	Uniform Force	Global Y	0.0420		0.0000	1.0000
701	Uniform Force	Global Y	0.0380		0.0000	1.0000
702	Uniform Force	Global Y	0.0380		0.0000	1.0000
703	Uniform Force	Global Y	0.0380		0.0000	1.0000
704	Uniform Force	Global Y	0.0380		0.0000	1.0000
705	Uniform Force	Global Y	0.0380		0.0000	1.0000

LOAD CASE WS -60 deg, Member Loads

Member	Type	Direction	Magnitude at Start (kips or kips-ft)	Magnitude at End (kips or kips-ft)	Start Position (x/L)	End Position from start (x/L)
706	Uniform Force	Global Y	0.0380		0.0000	1.0000
707	Uniform Force	Global Y	0.0380		0.0000	1.0000
708	Uniform Force	Global Y	0.0380		0.0000	1.0000
709	Uniform Force	Global Y	0.0380		0.0000	1.0000
710	Uniform Force	Global Y	0.0380		0.0000	1.0000
711	Uniform Force	Global Y	0.0380		0.0000	1.0000
712	Uniform Force	Global Y	0.0380		0.0000	1.0000
713	Uniform Force	Global Y	0.0380		0.0000	1.0000
714	Uniform Force	Global Y	0.0380		0.0000	1.0000
715	Uniform Force	Global Y	0.0380		0.0000	1.0000
716	Uniform Force	Global Y	0.0380		0.0000	1.0000
717	Uniform Force	Global Y	0.0380		0.0000	1.0000
718	Uniform Force	Global Y	0.0380		0.0000	1.0000
719	Uniform Force	Global Y	0.0380		0.0000	1.0000
720	Uniform Force	Global Y	0.0380		0.0000	1.0000
721	Uniform Force	Global Y	0.0380		0.0000	1.0000
722	Uniform Force	Global Y	0.0380		0.0000	1.0000
723	Uniform Force	Global Y	0.0380		0.0000	1.0000
724	Uniform Force	Global Y	0.0380		0.0000	1.0000
725	Uniform Force	Global Y	0.0380		0.0000	1.0000
726	Uniform Force	Global Y	0.0380		0.0000	1.0000
727	Uniform Force	Global Y	0.0380		0.0000	1.0000
728	Uniform Force	Global Y	0.0380		0.0000	1.0000
729	Uniform Force	Global Y	0.0380		0.0000	1.0000
730	Uniform Force	Global Y	0.0380		0.0000	1.0000
731	Uniform Force	Global Y	0.0380		0.0000	1.0000
732	Uniform Force	Global Y	0.0380		0.0000	1.0000
733	Uniform Force	Global Y	0.0380		0.0000	1.0000
740	Uniform Force	Global Y	0.0380		0.0000	1.0000
741	Uniform Force	Global Y	0.0380		0.0000	1.0000
742	Uniform Force	Global Y	0.0380		0.0000	1.0000
743	Uniform Force	Global Y	0.0380		0.0000	1.0000
744	Uniform Force	Global Y	0.0380		0.0000	1.0000
745	Uniform Force	Global Y	0.0380		0.0000	1.0000

LOAD CASE WS -60 deg, Member Loads

Member	Type	Direction	Magnitude at Start (kips or kips-ft)	Magnitude at End (kips or kips-ft)	Start Position (x/L)	End Position from start (x/L)
746	Uniform Force	Global Y	0.0380		0.0000	1.0000
747	Uniform Force	Global Y	0.0380		0.0000	1.0000
748	Uniform Force	Global Y	0.0380		0.0000	1.0000
749	Uniform Force	Global Y	0.0380		0.0000	1.0000
750	Uniform Force	Global Y	0.0380		0.0000	1.0000
751	Uniform Force	Global Y	0.0380		0.0000	1.0000
752	Uniform Force	Global Y	0.0380		0.0000	1.0000
753	Uniform Force	Global Y	0.0380		0.0000	1.0000
754	Uniform Force	Global Y	0.0380		0.0000	1.0000
755	Uniform Force	Global Y	0.0380		0.0000	1.0000
756	Uniform Force	Global Y	0.0380		0.0000	1.0000
757	Uniform Force	Global Y	0.0380		0.0000	1.0000
758	Uniform Force	Global Y	0.0380		0.0000	1.0000
759	Uniform Force	Global Y	0.0380		0.0000	1.0000
760	Uniform Force	Global Y	0.0380		0.0000	1.0000
761	Uniform Force	Global Y	0.0380		0.0000	1.0000
762	Uniform Force	Global Y	0.0380		0.0000	1.0000
763	Uniform Force	Global Y	0.0380		0.0000	1.0000
764	Uniform Force	Global Y	0.0380		0.0000	1.0000
765	Uniform Force	Global Y	0.0380		0.0000	1.0000
766	Uniform Force	Global Y	0.0380		0.0000	1.0000
767	Uniform Force	Global Y	0.0380		0.0000	1.0000
768	Uniform Force	Global Y	0.0380		0.0000	1.0000
769	Uniform Force	Global Y	0.0380		0.0000	1.0000
770	Uniform Force	Global Y	0.0380		0.0000	1.0000
771	Uniform Force	Global Y	0.0380		0.0000	1.0000
772	Uniform Force	Global Y	0.0380		0.0000	1.0000
1	Uniform Moment	Local x	-0.3100		0.0000	1.0000
2	Uniform Moment	Local x	-0.3100		0.0000	1.0000
3	Uniform Moment	Local x	-0.3100		0.0000	1.0000
4	Uniform Moment	Local x	-0.3100		0.0000	1.0000
5	Uniform Moment	Local x	-0.3100		0.0000	1.0000
6	Uniform Moment	Local x	-0.3100		0.0000	1.0000
7	Uniform Moment	Local x	-0.3100		0.0000	1.0000

LOAD CASE WS -60 deg, Member Loads

Member	Type	Direction	Magnitude at Start (kips or kips-ft)	Magnitude at End (kips or kips-ft)	Start Position (x/L)	End Position from start (x/L)
8	Uniform Moment	Local x	-0.3100		0.0000	1.0000
9	Uniform Moment	Local x	-0.3100		0.0000	1.0000
10	Uniform Moment	Local x	-0.3100		0.0000	1.0000
11	Uniform Moment	Local x	-0.3100		0.0000	1.0000
12	Uniform Moment	Local x	-0.3100		0.0000	1.0000
13	Uniform Moment	Local x	-0.3100		0.0000	1.0000
14	Uniform Moment	Local x	-0.3100		0.0000	1.0000
15	Uniform Moment	Local x	-0.3100		0.0000	1.0000
16	Uniform Moment	Local x	-0.3100		0.0000	1.0000
17	Uniform Moment	Local x	-0.3100		0.0000	1.0000
18	Uniform Moment	Local x	-0.3100		0.0000	1.0000
19	Uniform Moment	Local x	-0.3100		0.0000	1.0000
20	Uniform Moment	Local x	-0.3100		0.0000	1.0000
21	Uniform Moment	Local x	-0.3100		0.0000	1.0000
22	Uniform Moment	Local x	-0.3100		0.0000	1.0000
23	Uniform Moment	Local x	-0.3100		0.0000	1.0000
24	Uniform Moment	Local x	-0.3100		0.0000	1.0000
25	Uniform Moment	Local x	-0.3100		0.0000	1.0000
26	Uniform Moment	Local x	-0.3100		0.0000	1.0000
27	Uniform Moment	Local x	-0.3100		0.0000	1.0000
28	Uniform Moment	Local x	-0.3100		0.0000	1.0000
29	Uniform Moment	Local x	-0.3100		0.0000	1.0000
30	Uniform Moment	Local x	-0.3100		0.0000	1.0000
31	Uniform Moment	Local x	-0.3100		0.0000	1.0000
32	Uniform Moment	Local x	-0.3100		0.0000	1.0000
33	Uniform Moment	Local x	-0.3100		0.0000	1.0000
34	Uniform Moment	Local x	-0.3100		0.0000	1.0000
35	Uniform Moment	Local x	-0.3100		0.0000	1.0000
36	Uniform Moment	Local x	-0.3100		0.0000	1.0000
37	Uniform Moment	Local x	-0.3100		0.0000	1.0000
38	Uniform Moment	Local x	-0.3100		0.0000	1.0000
39	Uniform Moment	Local x	-0.3100		0.0000	1.0000
40	Uniform Moment	Local x	-0.3100		0.0000	1.0000
41	Uniform Moment	Local x	-0.3100		0.0000	1.0000

LOAD CASE WS -60 deg, Member Loads

Member	Type	Direction	Magnitude at Start (kips or kips-ft)	Magnitude at End (kips or kips-ft)	Start Position (x/L)	End Position from start (x/L)
42	Uniform Moment	Local x	-0.3100		0.0000	1.0000
43	Uniform Moment	Local x	-0.3100		0.0000	1.0000
44	Uniform Moment	Local x	-0.3100		0.0000	1.0000
45	Uniform Moment	Local x	-0.3100		0.0000	1.0000
46	Uniform Moment	Local x	-0.3100		0.0000	1.0000
47	Uniform Moment	Local x	-0.3100		0.0000	1.0000
48	Uniform Moment	Local x	-0.3100		0.0000	1.0000
49	Uniform Moment	Local x	-0.3100		0.0000	1.0000
50	Uniform Moment	Local x	-0.3100		0.0000	1.0000
51	Uniform Moment	Local x	-0.3100		0.0000	1.0000
52	Uniform Moment	Local x	-0.3100		0.0000	1.0000
53	Uniform Moment	Local x	-0.3100		0.0000	1.0000
54	Uniform Moment	Local x	-0.3100		0.0000	1.0000
55	Uniform Moment	Local x	-0.3100		0.0000	1.0000
56	Uniform Moment	Local x	-0.3100		0.0000	1.0000
57	Uniform Moment	Local x	-0.3100		0.0000	1.0000
1	Uniform Force	Local x	-0.2500		0.0000	1.0000
2	Uniform Force	Local x	-0.2500		0.0000	1.0000
3	Uniform Force	Local x	-0.2500		0.0000	1.0000
4	Uniform Force	Local x	-0.2500		0.0000	1.0000
5	Uniform Force	Local x	-0.2500		0.0000	1.0000
6	Uniform Force	Local x	-0.2500		0.0000	1.0000
7	Uniform Force	Local x	-0.2500		0.0000	1.0000
8	Uniform Force	Local x	-0.2500		0.0000	1.0000
9	Uniform Force	Local x	-0.2500		0.0000	1.0000
10	Uniform Force	Local x	-0.2500		0.0000	1.0000
11	Uniform Force	Local x	-0.2500		0.0000	1.0000
12	Uniform Force	Local x	-0.2500		0.0000	1.0000
13	Uniform Force	Local x	-0.2500		0.0000	1.0000
14	Uniform Force	Local x	-0.2500		0.0000	1.0000
15	Uniform Force	Local x	-0.2500		0.0000	1.0000
16	Uniform Force	Local x	-0.2500		0.0000	1.0000
17	Uniform Force	Local x	-0.2500		0.0000	1.0000
18	Uniform Force	Local x	-0.2500		0.0000	1.0000

LOAD CASE WS -60 deg, Member Loads

Member	Type	Direction	Magnitude at Start (kips or kips-ft)	Magnitude at End (kips or kips-ft)	Start Position (x/L)	End Position from start (x/L)
19	Uniform Force	Local x	-0.2500		0.0000	1.0000
20	Uniform Force	Local x	-0.2500		0.0000	1.0000
21	Uniform Force	Local x	-0.2500		0.0000	1.0000
22	Uniform Force	Local x	-0.2500		0.0000	1.0000
23	Uniform Force	Local x	-0.2500		0.0000	1.0000
24	Uniform Force	Local x	-0.2500		0.0000	1.0000
25	Uniform Force	Local x	-0.2500		0.0000	1.0000
26	Uniform Force	Local x	-0.2500		0.0000	1.0000
27	Uniform Force	Local x	-0.2500		0.0000	1.0000
28	Uniform Force	Local x	-0.2500		0.0000	1.0000
29	Uniform Force	Local x	-0.2500		0.0000	1.0000
30	Uniform Force	Local x	-0.2500		0.0000	1.0000
31	Uniform Force	Local x	-0.2500		0.0000	1.0000
32	Uniform Force	Local x	-0.2500		0.0000	1.0000
33	Uniform Force	Local x	-0.2500		0.0000	1.0000
34	Uniform Force	Local x	-0.2500		0.0000	1.0000
35	Uniform Force	Local x	-0.2500		0.0000	1.0000
36	Uniform Force	Local x	-0.2500		0.0000	1.0000
37	Uniform Force	Local x	-0.2500		0.0000	1.0000
38	Uniform Force	Local x	-0.2500		0.0000	1.0000
39	Uniform Force	Local x	-0.2500		0.0000	1.0000
40	Uniform Force	Local x	-0.2500		0.0000	1.0000
41	Uniform Force	Local x	-0.2500		0.0000	1.0000
42	Uniform Force	Local x	-0.2500		0.0000	1.0000
43	Uniform Force	Local x	-0.2500		0.0000	1.0000
44	Uniform Force	Local x	-0.2500		0.0000	1.0000
45	Uniform Force	Local x	-0.2500		0.0000	1.0000
46	Uniform Force	Local x	-0.2500		0.0000	1.0000
47	Uniform Force	Local x	-0.2500		0.0000	1.0000
48	Uniform Force	Local x	-0.2500		0.0000	1.0000
49	Uniform Force	Local x	-0.2500		0.0000	1.0000
50	Uniform Force	Local x	-0.2500		0.0000	1.0000
51	Uniform Force	Local x	-0.2500		0.0000	1.0000
52	Uniform Force	Local x	-0.2500		0.0000	1.0000

LOAD CASE WS -60 deg, Member Loads

Member	Type	Direction	Magnitude at Start (kips or kips-ft)	Magnitude at End (kips or kips-ft)	Start Position (x/L)	End Position from start (x/L)
53	Uniform Force	Local x	-0.2500		0.0000	1.0000
54	Uniform Force	Local x	-0.2500		0.0000	1.0000
55	Uniform Force	Local x	-0.2500		0.0000	1.0000
56	Uniform Force	Local x	-0.2500		0.0000	1.0000
57	Uniform Force	Local x	-0.2500		0.0000	1.0000
101	Uniform Force	Local x	-0.0870		0.0000	1.0000
102	Uniform Force	Local x	-0.0870		0.0000	1.0000
103	Uniform Force	Local x	-0.0870		0.0000	1.0000
104	Uniform Force	Local x	-0.0870		0.0000	1.0000
105	Uniform Force	Local x	-0.0870		0.0000	1.0000
106	Uniform Force	Local x	-0.0870		0.0000	1.0000
107	Uniform Force	Local x	-0.0870		0.0000	1.0000
108	Uniform Force	Local x	-0.0870		0.0000	1.0000
109	Uniform Force	Local x	-0.0870		0.0000	1.0000
110	Uniform Force	Local x	-0.0870		0.0000	1.0000
111	Uniform Force	Local x	-0.0870		0.0000	1.0000
112	Uniform Force	Local x	-0.0870		0.0000	1.0000
113	Uniform Force	Local x	-0.0870		0.0000	1.0000
114	Uniform Force	Local x	-0.0870		0.0000	1.0000
115	Uniform Force	Local x	-0.0870		0.0000	1.0000
116	Uniform Force	Local x	-0.0870		0.0000	1.0000
117	Uniform Force	Local x	-0.0870		0.0000	1.0000
118	Uniform Force	Local x	-0.0870		0.0000	1.0000
119	Uniform Force	Local x	-0.0870		0.0000	1.0000
120	Uniform Force	Local x	-0.0870		0.0000	1.0000
121	Uniform Force	Local x	-0.0870		0.0000	1.0000
122	Uniform Force	Local x	-0.0870		0.0000	1.0000
123	Uniform Force	Local x	-0.0870		0.0000	1.0000
124	Uniform Force	Local x	-0.0870		0.0000	1.0000
125	Uniform Force	Local x	-0.0870		0.0000	1.0000
126	Uniform Force	Local x	-0.0870		0.0000	1.0000
127	Uniform Force	Local x	-0.0870		0.0000	1.0000
128	Uniform Force	Local x	-0.0870		0.0000	1.0000
129	Uniform Force	Local x	-0.0870		0.0000	1.0000

LOAD CASE WS -60 deg, Member Loads

Member	Type	Direction	Magnitude at Start (kips or kips-ft)	Magnitude at End (kips or kips-ft)	Start Position (x/L)	End Position from start (x/L)
130	Uniform Force	Local x	-0.0870		0.0000	1.0000
131	Uniform Force	Local x	-0.0870		0.0000	1.0000
132	Uniform Force	Local x	-0.0870		0.0000	1.0000
133	Uniform Force	Local x	-0.0870		0.0000	1.0000
134	Uniform Force	Local x	-0.0870		0.0000	1.0000
135	Uniform Force	Local x	-0.0870		0.0000	1.0000
136	Uniform Force	Local x	-0.0870		0.0000	1.0000
137	Uniform Force	Local x	-0.0870		0.0000	1.0000
138	Uniform Force	Local x	-0.0870		0.0000	1.0000
139	Uniform Force	Local x	-0.0870		0.0000	1.0000
140	Uniform Force	Local x	-0.0870		0.0000	1.0000
141	Uniform Force	Local x	-0.0870		0.0000	1.0000
142	Uniform Force	Local x	-0.0870		0.0000	1.0000
143	Uniform Force	Local x	-0.0870		0.0000	1.0000
144	Uniform Force	Local x	-0.0870		0.0000	1.0000
145	Uniform Force	Local x	-0.0870		0.0000	1.0000
146	Uniform Force	Local x	-0.0870		0.0000	1.0000
147	Uniform Force	Local x	-0.0870		0.0000	1.0000
148	Uniform Force	Local x	-0.0870		0.0000	1.0000
149	Uniform Force	Local x	-0.0870		0.0000	1.0000
150	Uniform Force	Local x	-0.0870		0.0000	1.0000
151	Uniform Force	Local x	-0.0870		0.0000	1.0000
152	Uniform Force	Local x	-0.0870		0.0000	1.0000
153	Uniform Force	Local x	-0.0870		0.0000	1.0000
154	Uniform Force	Local x	-0.0870		0.0000	1.0000
155	Uniform Force	Local x	-0.0870		0.0000	1.0000
156	Uniform Force	Local x	-0.0870		0.0000	1.0000
157	Uniform Force	Local x	-0.0870		0.0000	1.0000
158	Uniform Force	Local x	-0.0870		0.0000	1.0000
159	Uniform Force	Local x	-0.0870		0.0000	1.0000
160	Uniform Force	Local x	-0.0870		0.0000	1.0000
701	Uniform Force	Global X	-0.0800		0.0000	1.0000
702	Uniform Force	Global X	-0.0800		0.0000	1.0000
703	Uniform Force	Global X	-0.0800		0.0000	1.0000

LOAD CASE WS -60 deg, Member Loads

Member	Type	Direction	Magnitude at Start (kips or kips-ft)	Magnitude at End (kips or kips-ft)	Start Position (x/L)	End Position from start (x/L)
704	Uniform Force	Global X	-0.0800		0.0000	1.0000
705	Uniform Force	Global X	-0.0800		0.0000	1.0000
706	Uniform Force	Global X	-0.0800		0.0000	1.0000
707	Uniform Force	Global X	-0.0800		0.0000	1.0000
708	Uniform Force	Global X	-0.0800		0.0000	1.0000
709	Uniform Force	Global X	-0.0800		0.0000	1.0000
710	Uniform Force	Global X	-0.0800		0.0000	1.0000
711	Uniform Force	Global X	-0.0800		0.0000	1.0000
712	Uniform Force	Global X	-0.0800		0.0000	1.0000
713	Uniform Force	Global X	-0.0800		0.0000	1.0000
714	Uniform Force	Global X	-0.0800		0.0000	1.0000
715	Uniform Force	Global X	-0.0800		0.0000	1.0000
716	Uniform Force	Global X	-0.0800		0.0000	1.0000
717	Uniform Force	Global X	-0.0800		0.0000	1.0000
718	Uniform Force	Global X	-0.0800		0.0000	1.0000
719	Uniform Force	Global X	-0.0800		0.0000	1.0000
720	Uniform Force	Global X	-0.0800		0.0000	1.0000
721	Uniform Force	Global X	-0.0800		0.0000	1.0000
722	Uniform Force	Global X	-0.0800		0.0000	1.0000
723	Uniform Force	Global X	-0.0800		0.0000	1.0000
724	Uniform Force	Global X	-0.0800		0.0000	1.0000
725	Uniform Force	Global X	-0.0800		0.0000	1.0000
726	Uniform Force	Global X	-0.0800		0.0000	1.0000
727	Uniform Force	Global X	-0.0800		0.0000	1.0000
728	Uniform Force	Global X	-0.0800		0.0000	1.0000
729	Uniform Force	Global X	-0.0800		0.0000	1.0000
730	Uniform Force	Global X	-0.0800		0.0000	1.0000
731	Uniform Force	Global X	-0.0800		0.0000	1.0000
732	Uniform Force	Global X	-0.0800		0.0000	1.0000
733	Uniform Force	Global X	-0.0800		0.0000	1.0000
740	Uniform Force	Global X	-0.0800		0.0000	1.0000
741	Uniform Force	Global X	-0.0800		0.0000	1.0000
742	Uniform Force	Global X	-0.0800		0.0000	1.0000
743	Uniform Force	Global X	-0.0800		0.0000	1.0000

LOAD CASE WS -60 deg, Member Loads

Member	Type	Direction	Magnitude at Start (kips or kips-ft)	Magnitude at End (kips or kips-ft)	Start Position (x/L)	End Position from start (x/L)
744	Uniform Force	Global X	-0.0800		0.0000	1.0000
745	Uniform Force	Global X	-0.0800		0.0000	1.0000
746	Uniform Force	Global X	-0.0800		0.0000	1.0000
747	Uniform Force	Global X	-0.0800		0.0000	1.0000
748	Uniform Force	Global X	-0.0800		0.0000	1.0000
749	Uniform Force	Global X	-0.0800		0.0000	1.0000
750	Uniform Force	Global X	-0.0800		0.0000	1.0000
751	Uniform Force	Global X	-0.0800		0.0000	1.0000
752	Uniform Force	Global X	-0.0800		0.0000	1.0000
753	Uniform Force	Global X	-0.0800		0.0000	1.0000
754	Uniform Force	Global X	-0.0800		0.0000	1.0000
755	Uniform Force	Global X	-0.0800		0.0000	1.0000
756	Uniform Force	Global X	-0.0800		0.0000	1.0000
757	Uniform Force	Global X	-0.0800		0.0000	1.0000
758	Uniform Force	Global X	-0.0800		0.0000	1.0000
759	Uniform Force	Global X	-0.0800		0.0000	1.0000
760	Uniform Force	Global X	-0.0800		0.0000	1.0000
761	Uniform Force	Global X	-0.0800		0.0000	1.0000
762	Uniform Force	Global X	-0.0800		0.0000	1.0000
763	Uniform Force	Global X	-0.0800		0.0000	1.0000
764	Uniform Force	Global X	-0.0800		0.0000	1.0000
765	Uniform Force	Global X	-0.0800		0.0000	1.0000
766	Uniform Force	Global X	-0.0800		0.0000	1.0000
767	Uniform Force	Global X	-0.0800		0.0000	1.0000
768	Uniform Force	Global X	-0.0800		0.0000	1.0000
769	Uniform Force	Global X	-0.0800		0.0000	1.0000
770	Uniform Force	Global X	-0.0800		0.0000	1.0000
771	Uniform Force	Global X	-0.0800		0.0000	1.0000
772	Uniform Force	Global X	-0.0800		0.0000	1.0000
2002	Uniform Force	Global Y	0.2010		0.0000	1.0000
2003	Uniform Force	Global Y	0.2010		0.0000	1.0000
2002	Trapezoidal Force	Global X	-1.0500	-0.8100	0.0000	1.0000
2003	Trapezoidal Force	Global X	-0.8100	-0.5800	0.0000	1.0000
1017	Uniform Force	Global Y	0.1680		0.0000	1.0000

LOAD CASE WS -60 deg, Member Loads

Member	Type	Direction	Magnitude at Start (kips or kips-ft)	Magnitude at End (kips or kips-ft)	Start Position (x/L)	End Position from start (x/L)
1018	Uniform Force	Global Y	0.1680		0.0000	1.0000
1019	Uniform Force	Global Y	0.1680		0.0000	1.0000
1017	Uniform Force	Global X	-0.1160		0.0000	1.0000
1018	Uniform Force	Global X	-0.1160		0.0000	1.0000
1019	Uniform Force	Global X	-0.1160		0.0000	1.0000
1013	Uniform Force	Global Y	0.1680		0.0000	1.0000
1014	Uniform Force	Global Y	0.1680		0.0000	1.0000
1015	Uniform Force	Global Y	0.1680		0.0000	1.0000
1013	Uniform Force	Global X	-0.1160		0.0000	1.0000
1014	Uniform Force	Global X	-0.1160		0.0000	1.0000
1015	Uniform Force	Global X	-0.1160		0.0000	1.0000
3017	Uniform Force	Global Y	0.1680		0.0000	1.0000
3018	Uniform Force	Global Y	0.1680		0.0000	1.0000
3019	Uniform Force	Global Y	0.1680		0.0000	1.0000
3017	Uniform Force	Global X	-0.1160		0.0000	1.0000
3018	Uniform Force	Global X	-0.1160		0.0000	1.0000
3019	Uniform Force	Global X	-0.1160		0.0000	1.0000
3013	Uniform Force	Global Y	0.1680		0.0000	1.0000
3014	Uniform Force	Global Y	0.1680		0.0000	1.0000
3015	Uniform Force	Global Y	0.1680		0.0000	1.0000
3013	Uniform Force	Global X	-0.1160		0.0000	1.0000
3014	Uniform Force	Global X	-0.1160		0.0000	1.0000
3015	Uniform Force	Global X	-0.1160		0.0000	1.0000
1006	Uniform Force	Global X	-0.2900		0.0000	1.0000
1007	Uniform Force	Global X	-0.2900		0.0000	1.0000
1008	Uniform Force	Global X	-0.2900		0.0000	1.0000
1009	Uniform Force	Global X	-0.2900		0.0000	1.0000
1010	Uniform Force	Global X	-0.2900		0.0000	1.0000
1011	Uniform Force	Global X	-0.2900		0.0000	1.0000
1012	Uniform Force	Global X	-0.2900		0.0000	1.0000
3006	Uniform Force	Global X	-0.2900		0.0000	1.0000
3007	Uniform Force	Global X	-0.2900		0.0000	1.0000
3008	Uniform Force	Global X	-0.2900		0.0000	1.0000
3009	Uniform Force	Global X	-0.2900		0.0000	1.0000

LOAD CASE WS -60 deg, Member Loads

Member	Type	Direction	Magnitude at Start (kips or kips-ft)	Magnitude at End (kips or kips-ft)	Start Position (x/L)	End Position from start (x/L)
3010	Uniform Force	Global X	-0.2900		0.0000	1.0000
3011	Uniform Force	Global X	-0.2900		0.0000	1.0000
3012	Uniform Force	Global X	-0.2900		0.0000	1.0000
501	Uniform Force	Global Y	0.0480		0.0000	1.0000
502	Uniform Force	Global Y	0.0480		0.0000	1.0000
503	Uniform Force	Global Y	0.0480		0.0000	1.0000
504	Uniform Force	Global Y	0.0480		0.0000	1.0000
505	Uniform Force	Global Y	0.0480		0.0000	1.0000
601	Uniform Force	Global Y	0.0480		0.0000	1.0000
602	Uniform Force	Global Y	0.0480		0.0000	1.0000
603	Uniform Force	Global Y	0.0480		0.0000	1.0000
604	Uniform Force	Global Y	0.0480		0.0000	1.0000
605	Uniform Force	Global Y	0.0480		0.0000	1.0000
401	Uniform Force	Global Y	0.2010		0.0000	1.0000
402	Uniform Force	Global Y	0.2010		0.0000	1.0000
403	Uniform Force	Global Y	0.2010		0.0000	1.0000
405	Trapezoidal Force	Global Y	0.2500	0.2400	0.0000	1.0000
406	Trapezoidal Force	Global Y	0.2400	0.2300	0.0000	1.0000
407	Trapezoidal Force	Global Y	0.2300	0.2200	0.0000	1.0000
408	Trapezoidal Force	Global Y	0.2200	0.2000	0.0000	1.0000
409	Trapezoidal Force	Global Y	0.2000	0.2000	0.0000	1.0000
410	Trapezoidal Force	Global Y	0.2000	0.1900	0.0000	1.0000
411	Trapezoidal Force	Global Y	0.1900	0.1800	0.0000	1.0000
412	Trapezoidal Force	Global Y	0.1800	0.1700	0.0000	1.0000
413	Trapezoidal Force	Global Y	0.1700	0.1600	0.0000	1.0000
501	Uniform Force	Global X	-0.0840		0.0000	1.0000
502	Uniform Force	Global X	-0.0840		0.0000	1.0000
503	Uniform Force	Global X	-0.0840		0.0000	1.0000
504	Uniform Force	Global X	-0.0840		0.0000	1.0000
505	Uniform Force	Global X	-0.0840		0.0000	1.0000
601	Uniform Force	Global X	-0.0840		0.0000	1.0000
602	Uniform Force	Global X	-0.0840		0.0000	1.0000
603	Uniform Force	Global X	-0.0840		0.0000	1.0000
604	Uniform Force	Global X	-0.0840		0.0000	1.0000

LOAD CASE WS -60 deg, Member Loads

Member	Type	Direction	Magnitude at Start (kips or kips-ft)	Magnitude at End (kips or kips-ft)	Start Position (x/L)	End Position from start (x/L)
605	Uniform Force	Global X	-0.0840		0.0000	1.0000
401	Uniform Force	Global X	-0.2900		0.0000	1.0000
402	Uniform Force	Global X	-0.2900		0.0000	1.0000
403	Uniform Force	Global X	-0.2900		0.0000	1.0000
405	Trapezoidal Force	Global X	-0.4400	-0.4200	0.0000	1.0000
406	Trapezoidal Force	Global X	-0.4200	-0.4000	0.0000	1.0000
407	Trapezoidal Force	Global X	-0.4000	-0.3900	0.0000	1.0000
408	Trapezoidal Force	Global X	-0.3900	-0.3500	0.0000	1.0000
409	Trapezoidal Force	Global X	-0.3500	-0.3400	0.0000	1.0000
410	Trapezoidal Force	Global X	-0.3400	-0.3200	0.0000	1.0000
411	Trapezoidal Force	Global X	-0.3200	-0.3100	0.0000	1.0000
412	Trapezoidal Force	Global X	-0.3100	-0.2900	0.0000	1.0000
413	Trapezoidal Force	Global X	-0.2900	-0.2800	0.0000	1.0000

LOAD CASE TU+, Member Thermal Loads

Member	Type	Variation Direction	Temperature Change at Top (+ Edge)(°F)	Temperature Change at Bottom (- Edge)(°F)	Nonlinear Temperature Curve
1	Uniform	n/a	35.0000		
2	Uniform	n/a	35.0000		
3	Uniform	n/a	35.0000		
4	Uniform	n/a	35.0000		
5	Uniform	n/a	35.0000		
6	Uniform	n/a	35.0000		
7	Uniform	n/a	35.0000		
8	Uniform	n/a	35.0000		
9	Uniform	n/a	35.0000		
10	Uniform	n/a	35.0000		
11	Uniform	n/a	35.0000		
12	Uniform	n/a	35.0000		
13	Uniform	n/a	35.0000		
14	Uniform	n/a	35.0000		
15	Uniform	n/a	35.0000		
16	Uniform	n/a	35.0000		

LOAD CASE TU+, Member Thermal Loads

Member	Type	Variation Direction	Temperature Change at Top (+ Edge)(°F)	Temperature Change at Bottom (- Edge)(°F)	Nonlinear Temperature Curve
17	Uniform	n/a	35.0000		
18	Uniform	n/a	35.0000		
19	Uniform	n/a	35.0000		
20	Uniform	n/a	35.0000		
21	Uniform	n/a	35.0000		
22	Uniform	n/a	35.0000		
23	Uniform	n/a	35.0000		
24	Uniform	n/a	35.0000		
25	Uniform	n/a	35.0000		
26	Uniform	n/a	35.0000		
27	Uniform	n/a	35.0000		
28	Uniform	n/a	35.0000		
29	Uniform	n/a	35.0000		
30	Uniform	n/a	35.0000		
31	Uniform	n/a	35.0000		
32	Uniform	n/a	35.0000		
33	Uniform	n/a	35.0000		
34	Uniform	n/a	35.0000		
35	Uniform	n/a	35.0000		
36	Uniform	n/a	35.0000		
37	Uniform	n/a	35.0000		
38	Uniform	n/a	35.0000		
39	Uniform	n/a	35.0000		
40	Uniform	n/a	35.0000		
41	Uniform	n/a	35.0000		
42	Uniform	n/a	35.0000		
43	Uniform	n/a	35.0000		
44	Uniform	n/a	35.0000		
45	Uniform	n/a	35.0000		
46	Uniform	n/a	35.0000		
47	Uniform	n/a	35.0000		
48	Uniform	n/a	35.0000		
49	Uniform	n/a	35.0000		
50	Uniform	n/a	35.0000		

LOAD CASE TU+, Member Thermal Loads

Member	Type	Variation Direction	Temperature Change at Top (+ Edge)(°F)	Temperature Change at Bottom (- Edge)(°F)	Nonlinear Temperature Curve
51	Uniform	n/a	35.0000		
52	Uniform	n/a	35.0000		
53	Uniform	n/a	35.0000		
54	Uniform	n/a	35.0000		
55	Uniform	n/a	35.0000		
56	Uniform	n/a	35.0000		
57	Uniform	n/a	35.0000		
101	Uniform	n/a	35.0000		
102	Uniform	n/a	35.0000		
103	Uniform	n/a	35.0000		
104	Uniform	n/a	35.0000		
105	Uniform	n/a	35.0000		
106	Uniform	n/a	35.0000		
107	Uniform	n/a	35.0000		
108	Uniform	n/a	35.0000		
109	Uniform	n/a	35.0000		
110	Uniform	n/a	35.0000		
111	Uniform	n/a	35.0000		
112	Uniform	n/a	35.0000		
113	Uniform	n/a	35.0000		
114	Uniform	n/a	35.0000		
115	Uniform	n/a	35.0000		
116	Uniform	n/a	35.0000		
117	Uniform	n/a	35.0000		
118	Uniform	n/a	35.0000		
119	Uniform	n/a	35.0000		
120	Uniform	n/a	35.0000		
121	Uniform	n/a	35.0000		
122	Uniform	n/a	35.0000		
123	Uniform	n/a	35.0000		
124	Uniform	n/a	35.0000		
125	Uniform	n/a	35.0000		
126	Uniform	n/a	35.0000		
127	Uniform	n/a	35.0000		

LOAD CASE TU+, Member Thermal Loads

Member	Type	Variation Direction	Temperature Change at Top (+ Edge)(°F)	Temperature Change at Bottom (- Edge)(°F)	Nonlinear Temperature Curve
128	Uniform	n/a	35.0000		
129	Uniform	n/a	35.0000		
130	Uniform	n/a	35.0000		
131	Uniform	n/a	35.0000		
132	Uniform	n/a	35.0000		
133	Uniform	n/a	35.0000		
134	Uniform	n/a	35.0000		
135	Uniform	n/a	35.0000		
136	Uniform	n/a	35.0000		
137	Uniform	n/a	35.0000		
138	Uniform	n/a	35.0000		
139	Uniform	n/a	35.0000		
140	Uniform	n/a	35.0000		
141	Uniform	n/a	35.0000		
142	Uniform	n/a	35.0000		
143	Uniform	n/a	35.0000		
144	Uniform	n/a	35.0000		
145	Uniform	n/a	35.0000		
146	Uniform	n/a	35.0000		
147	Uniform	n/a	35.0000		
148	Uniform	n/a	35.0000		
149	Uniform	n/a	35.0000		
150	Uniform	n/a	35.0000		
151	Uniform	n/a	35.0000		
152	Uniform	n/a	35.0000		
153	Uniform	n/a	35.0000		
154	Uniform	n/a	35.0000		
155	Uniform	n/a	35.0000		
156	Uniform	n/a	35.0000		
157	Uniform	n/a	35.0000		
158	Uniform	n/a	35.0000		
159	Uniform	n/a	35.0000		
160	Uniform	n/a	35.0000		
701	Uniform	n/a	35.0000		

LOAD CASE TU+, Member Thermal Loads

Member	Type	Variation Direction	Temperature Change at Top (+ Edge)(°F)	Temperature Change at Bottom (- Edge)(°F)	Nonlinear Temperature Curve
702	Uniform	n/a	35.0000		
703	Uniform	n/a	35.0000		
704	Uniform	n/a	35.0000		
705	Uniform	n/a	35.0000		
706	Uniform	n/a	35.0000		
707	Uniform	n/a	35.0000		
708	Uniform	n/a	35.0000		
709	Uniform	n/a	35.0000		
710	Uniform	n/a	35.0000		
711	Uniform	n/a	35.0000		
712	Uniform	n/a	35.0000		
713	Uniform	n/a	35.0000		
714	Uniform	n/a	35.0000		
715	Uniform	n/a	35.0000		
716	Uniform	n/a	35.0000		
717	Uniform	n/a	35.0000		
718	Uniform	n/a	35.0000		
719	Uniform	n/a	35.0000		
720	Uniform	n/a	35.0000		
721	Uniform	n/a	35.0000		
722	Uniform	n/a	35.0000		
723	Uniform	n/a	35.0000		
724	Uniform	n/a	35.0000		
725	Uniform	n/a	35.0000		
726	Uniform	n/a	35.0000		
727	Uniform	n/a	35.0000		
728	Uniform	n/a	35.0000		
729	Uniform	n/a	35.0000		
730	Uniform	n/a	35.0000		
731	Uniform	n/a	35.0000		
732	Uniform	n/a	35.0000		
733	Uniform	n/a	35.0000		
740	Uniform	n/a	35.0000		
741	Uniform	n/a	35.0000		

LOAD CASE TU+, Member Thermal Loads

Member	Type	Variation Direction	Temperature Change at Top (+ Edge)(°F)	Temperature Change at Bottom (- Edge)(°F)	Nonlinear Temperature Curve
742	Uniform	n/a	35.0000		
743	Uniform	n/a	35.0000		
744	Uniform	n/a	35.0000		
745	Uniform	n/a	35.0000		
746	Uniform	n/a	35.0000		
747	Uniform	n/a	35.0000		
748	Uniform	n/a	35.0000		
749	Uniform	n/a	35.0000		
750	Uniform	n/a	35.0000		
751	Uniform	n/a	35.0000		
752	Uniform	n/a	35.0000		
753	Uniform	n/a	35.0000		
754	Uniform	n/a	35.0000		
755	Uniform	n/a	35.0000		
756	Uniform	n/a	35.0000		
757	Uniform	n/a	35.0000		
758	Uniform	n/a	35.0000		
759	Uniform	n/a	35.0000		
760	Uniform	n/a	35.0000		
761	Uniform	n/a	35.0000		
762	Uniform	n/a	35.0000		
763	Uniform	n/a	35.0000		
764	Uniform	n/a	35.0000		
765	Uniform	n/a	35.0000		
766	Uniform	n/a	35.0000		
767	Uniform	n/a	35.0000		
768	Uniform	n/a	35.0000		
769	Uniform	n/a	35.0000		
770	Uniform	n/a	35.0000		
771	Uniform	n/a	35.0000		
772	Uniform	n/a	35.0000		
501	Uniform	n/a	35.0000		
502	Uniform	n/a	35.0000		
503	Uniform	n/a	35.0000		

LOAD CASE TU+, Member Thermal Loads

Member	Type	Variation Direction	Temperature Change at Top (+ Edge)(°F)	Temperature Change at Bottom (- Edge)(°F)	Nonlinear Temperature Curve
504	Uniform	n/a	35.0000		
505	Uniform	n/a	35.0000		
601	Uniform	n/a	35.0000		
602	Uniform	n/a	35.0000		
603	Uniform	n/a	35.0000		
604	Uniform	n/a	35.0000		
605	Uniform	n/a	35.0000		

LOAD CASE TU-, Member Thermal Loads

Member	Type	Variation Direction	Temperature Change at Top (+ Edge)(°F)	Temperature Change at Bottom (- Edge)(°F)	Nonlinear Temperature Curve
1	Uniform	n/a	-35.0000		
2	Uniform	n/a	-35.0000		
3	Uniform	n/a	-35.0000		
4	Uniform	n/a	-35.0000		
5	Uniform	n/a	-35.0000		
6	Uniform	n/a	-35.0000		
7	Uniform	n/a	-35.0000		
8	Uniform	n/a	-35.0000		
9	Uniform	n/a	-35.0000		
10	Uniform	n/a	-35.0000		
11	Uniform	n/a	-35.0000		
12	Uniform	n/a	-35.0000		
13	Uniform	n/a	-35.0000		
14	Uniform	n/a	-35.0000		
15	Uniform	n/a	-35.0000		
16	Uniform	n/a	-35.0000		
17	Uniform	n/a	-35.0000		
18	Uniform	n/a	-35.0000		
19	Uniform	n/a	-35.0000		
20	Uniform	n/a	-35.0000		
21	Uniform	n/a	-35.0000		
22	Uniform	n/a	-35.0000		

LOAD CASE TU-, Member Thermal Loads

Member	Type	Variation Direction	Temperature Change at Top (+ Edge)(°F)	Temperature Change at Bottom (- Edge)(°F)	Nonlinear Temperature Curve
23	Uniform	n/a	-35.0000		
24	Uniform	n/a	-35.0000		
25	Uniform	n/a	-35.0000		
26	Uniform	n/a	-35.0000		
27	Uniform	n/a	-35.0000		
28	Uniform	n/a	-35.0000		
29	Uniform	n/a	-35.0000		
30	Uniform	n/a	-35.0000		
31	Uniform	n/a	-35.0000		
32	Uniform	n/a	-35.0000		
33	Uniform	n/a	-35.0000		
34	Uniform	n/a	-35.0000		
35	Uniform	n/a	-35.0000		
36	Uniform	n/a	-35.0000		
37	Uniform	n/a	-35.0000		
38	Uniform	n/a	-35.0000		
39	Uniform	n/a	-35.0000		
40	Uniform	n/a	-35.0000		
41	Uniform	n/a	-35.0000		
42	Uniform	n/a	-35.0000		
43	Uniform	n/a	-35.0000		
44	Uniform	n/a	-35.0000		
45	Uniform	n/a	-35.0000		
46	Uniform	n/a	-35.0000		
47	Uniform	n/a	-35.0000		
48	Uniform	n/a	-35.0000		
49	Uniform	n/a	-35.0000		
50	Uniform	n/a	-35.0000		
51	Uniform	n/a	-35.0000		
52	Uniform	n/a	-35.0000		
53	Uniform	n/a	-35.0000		
54	Uniform	n/a	-35.0000		
55	Uniform	n/a	-35.0000		
56	Uniform	n/a	-35.0000		

LOAD CASE TU-, Member Thermal Loads

Member	Type	Variation Direction	Temperature Change at Top (+ Edge)(°F)	Temperature Change at Bottom (- Edge)(°F)	Nonlinear Temperature Curve
57	Uniform	n/a	-35.0000		
101	Uniform	n/a	-35.0000		
102	Uniform	n/a	-35.0000		
103	Uniform	n/a	-35.0000		
104	Uniform	n/a	-35.0000		
105	Uniform	n/a	-35.0000		
106	Uniform	n/a	-35.0000		
107	Uniform	n/a	-35.0000		
108	Uniform	n/a	-35.0000		
109	Uniform	n/a	-35.0000		
110	Uniform	n/a	-35.0000		
111	Uniform	n/a	-35.0000		
112	Uniform	n/a	-35.0000		
113	Uniform	n/a	-35.0000		
114	Uniform	n/a	-35.0000		
115	Uniform	n/a	-35.0000		
116	Uniform	n/a	-35.0000		
117	Uniform	n/a	-35.0000		
118	Uniform	n/a	-35.0000		
119	Uniform	n/a	-35.0000		
120	Uniform	n/a	-35.0000		
121	Uniform	n/a	-35.0000		
122	Uniform	n/a	-35.0000		
123	Uniform	n/a	-35.0000		
124	Uniform	n/a	-35.0000		
125	Uniform	n/a	-35.0000		
126	Uniform	n/a	-35.0000		
127	Uniform	n/a	-35.0000		
128	Uniform	n/a	-35.0000		
129	Uniform	n/a	-35.0000		
130	Uniform	n/a	-35.0000		
131	Uniform	n/a	-35.0000		
132	Uniform	n/a	-35.0000		
133	Uniform	n/a	-35.0000		

LOAD CASE TU-, Member Thermal Loads

Member	Type	Variation Direction	Temperature Change at Top (+ Edge)(°F)	Temperature Change at Bottom (- Edge)(°F)	Nonlinear Temperature Curve
134	Uniform	n/a	-35.0000		
135	Uniform	n/a	-35.0000		
136	Uniform	n/a	-35.0000		
137	Uniform	n/a	-35.0000		
138	Uniform	n/a	-35.0000		
139	Uniform	n/a	-35.0000		
140	Uniform	n/a	-35.0000		
141	Uniform	n/a	-35.0000		
142	Uniform	n/a	-35.0000		
143	Uniform	n/a	-35.0000		
144	Uniform	n/a	-35.0000		
145	Uniform	n/a	-35.0000		
146	Uniform	n/a	-35.0000		
147	Uniform	n/a	-35.0000		
148	Uniform	n/a	-35.0000		
149	Uniform	n/a	-35.0000		
150	Uniform	n/a	-35.0000		
151	Uniform	n/a	-35.0000		
152	Uniform	n/a	-35.0000		
153	Uniform	n/a	-35.0000		
154	Uniform	n/a	-35.0000		
155	Uniform	n/a	-35.0000		
156	Uniform	n/a	-35.0000		
157	Uniform	n/a	-35.0000		
158	Uniform	n/a	-35.0000		
159	Uniform	n/a	-35.0000		
160	Uniform	n/a	-35.0000		
701	Uniform	n/a	-35.0000		
702	Uniform	n/a	-35.0000		
703	Uniform	n/a	-35.0000		
704	Uniform	n/a	-35.0000		
705	Uniform	n/a	-35.0000		
706	Uniform	n/a	-35.0000		
707	Uniform	n/a	-35.0000		

LOAD CASE TU-, Member Thermal Loads

Member	Type	Variation Direction	Temperature Change at Top (+ Edge)(°F)	Temperature Change at Bottom (- Edge)(°F)	Nonlinear Temperature Curve
708	Uniform	n/a	-35.0000		
709	Uniform	n/a	-35.0000		
710	Uniform	n/a	-35.0000		
711	Uniform	n/a	-35.0000		
712	Uniform	n/a	-35.0000		
713	Uniform	n/a	-35.0000		
714	Uniform	n/a	-35.0000		
715	Uniform	n/a	-35.0000		
716	Uniform	n/a	-35.0000		
717	Uniform	n/a	-35.0000		
718	Uniform	n/a	-35.0000		
719	Uniform	n/a	-35.0000		
720	Uniform	n/a	-35.0000		
721	Uniform	n/a	-35.0000		
722	Uniform	n/a	-35.0000		
723	Uniform	n/a	-35.0000		
724	Uniform	n/a	-35.0000		
725	Uniform	n/a	-35.0000		
726	Uniform	n/a	-35.0000		
727	Uniform	n/a	-35.0000		
728	Uniform	n/a	-35.0000		
729	Uniform	n/a	-35.0000		
730	Uniform	n/a	-35.0000		
731	Uniform	n/a	-35.0000		
732	Uniform	n/a	-35.0000		
733	Uniform	n/a	-35.0000		
740	Uniform	n/a	-35.0000		
741	Uniform	n/a	-35.0000		
742	Uniform	n/a	-35.0000		
743	Uniform	n/a	-35.0000		
744	Uniform	n/a	-35.0000		
745	Uniform	n/a	-35.0000		
746	Uniform	n/a	-35.0000		
747	Uniform	n/a	-35.0000		

LOAD CASE TU-, Member Thermal Loads

Member	Type	Variation Direction	Temperature Change at Top (+ Edge)(°F)	Temperature Change at Bottom (- Edge)(°F)	Nonlinear Temperature Curve
748	Uniform	n/a	-35.0000		
749	Uniform	n/a	-35.0000		
750	Uniform	n/a	-35.0000		
751	Uniform	n/a	-35.0000		
752	Uniform	n/a	-35.0000		
753	Uniform	n/a	-35.0000		
754	Uniform	n/a	-35.0000		
755	Uniform	n/a	-35.0000		
756	Uniform	n/a	-35.0000		
757	Uniform	n/a	-35.0000		
758	Uniform	n/a	-35.0000		
759	Uniform	n/a	-35.0000		
760	Uniform	n/a	-35.0000		
761	Uniform	n/a	-35.0000		
762	Uniform	n/a	-35.0000		
763	Uniform	n/a	-35.0000		
764	Uniform	n/a	-35.0000		
765	Uniform	n/a	-35.0000		
766	Uniform	n/a	-35.0000		
767	Uniform	n/a	-35.0000		
768	Uniform	n/a	-35.0000		
769	Uniform	n/a	-35.0000		
770	Uniform	n/a	-35.0000		
771	Uniform	n/a	-35.0000		
772	Uniform	n/a	-35.0000		
501	Uniform	n/a	-35.0000		
502	Uniform	n/a	-35.0000		
503	Uniform	n/a	-35.0000		
504	Uniform	n/a	-35.0000		
505	Uniform	n/a	-35.0000		
601	Uniform	n/a	-35.0000		
602	Uniform	n/a	-35.0000		
603	Uniform	n/a	-35.0000		
604	Uniform	n/a	-35.0000		

LOAD CASE TU-, Member Thermal Loads

Member	Type	Variation Direction	Temperature Change at Top (+ Edge)(°F)	Temperature Change at Bottom (- Edge)(°F)	Nonlinear Temperature Curve
605	Uniform	n/a	-35.0000		

LOAD CASE DC3, Member Loads

Member	Type	Direction	Magnitude at Start (kips or kips-ft)	Magnitude at End (kips or kips-ft)	Start Position (x/L)	End Position from start (x/L)
1	Uniform Force	Global Z	-0.3960		0.0000	1.0000
2	Uniform Force	Global Z	-0.3960		0.0000	1.0000
3	Uniform Force	Global Z	-0.3960		0.0000	1.0000
4	Uniform Force	Global Z	-0.3960		0.0000	1.0000
5	Uniform Force	Global Z	-0.3960		0.0000	1.0000
6	Uniform Force	Global Z	-0.3960		0.0000	1.0000
7	Uniform Force	Global Z	-0.3960		0.0000	1.0000
8	Uniform Force	Global Z	-0.3960		0.0000	1.0000
9	Uniform Force	Global Z	-0.3960		0.0000	1.0000
10	Uniform Force	Global Z	-0.3960		0.0000	1.0000
11	Uniform Force	Global Z	-0.3960		0.0000	1.0000
12	Uniform Force	Global Z	-0.3960		0.0000	1.0000
13	Uniform Force	Global Z	-0.3960		0.0000	1.0000
14	Uniform Force	Global Z	-0.3960		0.0000	1.0000
15	Uniform Force	Global Z	-0.3960		0.0000	1.0000
16	Uniform Force	Global Z	-0.3960		0.0000	1.0000
17	Uniform Force	Global Z	-0.3960		0.0000	1.0000
18	Uniform Force	Global Z	-0.3960		0.0000	1.0000
19	Uniform Force	Global Z	-0.3960		0.0000	1.0000
20	Uniform Force	Global Z	-0.3960		0.0000	1.0000
21	Uniform Force	Global Z	-0.3960		0.0000	1.0000
22	Uniform Force	Global Z	-0.3960		0.0000	1.0000
23	Uniform Force	Global Z	-0.3960		0.0000	1.0000
24	Uniform Force	Global Z	-0.3960		0.0000	1.0000
25	Uniform Force	Global Z	-0.3960		0.0000	1.0000
26	Uniform Force	Global Z	-0.3960		0.0000	1.0000
27	Uniform Force	Global Z	-0.3960		0.0000	1.0000
28	Uniform Force	Global Z	-0.3960		0.0000	1.0000

LOAD CASE DC3, Member Loads

Member	Type	Direction	Magnitude at Start (kips or kips-ft)	Magnitude at End (kips or kips-ft)	Start Position (x/L)	End Position from start (x/L)
29	Uniform Force	Global Z	-0.3960		0.0000	1.0000
30	Uniform Force	Global Z	-0.3960		0.0000	1.0000
31	Uniform Force	Global Z	-0.3960		0.0000	1.0000
32	Uniform Force	Global Z	-0.3960		0.0000	1.0000
33	Uniform Force	Global Z	-0.3960		0.0000	1.0000
34	Uniform Force	Global Z	-0.3960		0.0000	1.0000
35	Uniform Force	Global Z	-0.3960		0.0000	1.0000
36	Uniform Force	Global Z	-0.3960		0.0000	1.0000
37	Uniform Force	Global Z	-0.3960		0.0000	1.0000
38	Uniform Force	Global Z	-0.3960		0.0000	1.0000
39	Uniform Force	Global Z	-0.3960		0.0000	1.0000
40	Uniform Force	Global Z	-0.3960		0.0000	1.0000
41	Uniform Force	Global Z	-0.3960		0.0000	1.0000
42	Uniform Force	Global Z	-0.3960		0.0000	1.0000
43	Uniform Force	Global Z	-0.3960		0.0000	1.0000
44	Uniform Force	Global Z	-0.3960		0.0000	1.0000
45	Uniform Force	Global Z	-0.3960		0.0000	1.0000
46	Uniform Force	Global Z	-0.3960		0.0000	1.0000
47	Uniform Force	Global Z	-0.3960		0.0000	1.0000
48	Uniform Force	Global Z	-0.3960		0.0000	1.0000
49	Uniform Force	Global Z	-0.3960		0.0000	1.0000
50	Uniform Force	Global Z	-0.3960		0.0000	1.0000
51	Uniform Force	Global Z	-0.3960		0.0000	1.0000
52	Uniform Force	Global Z	-0.3960		0.0000	1.0000
53	Uniform Force	Global Z	-0.3960		0.0000	1.0000
54	Uniform Force	Global Z	-0.3960		0.0000	1.0000
55	Uniform Force	Global Z	-0.3960		0.0000	1.0000
56	Uniform Force	Global Z	-0.3960		0.0000	1.0000
57	Uniform Force	Global Z	-0.3960		0.0000	1.0000

LOAD CASE DC3, Joint Loads

Joint	X-Force (kips)	Y-Force (kips)	Z-Force (kips)	X-Moment (kips-ft)	Y-Moment (kips-ft)	Z-Moment (kips-ft)
58	0.0000	0.0000	-5.3000	0.0000	0.0000	0.0000

LOAD CASE Temp. Differential, Member Thermal Loads

Member	Type	Variation Direction	Temperature Change at Top (+ Edge)(°F)	Temperature Change at Bottom (- Edge)(°F)	Nonlinear Temperature Curve
501	Uniform	n/a	14.5000		
502	Uniform	n/a	14.5000		
503	Uniform	n/a	14.5000		
504	Uniform	n/a	14.5000		
505	Uniform	n/a	14.5000		
601	Uniform	n/a	14.5000		
602	Uniform	n/a	14.5000		
603	Uniform	n/a	14.5000		
604	Uniform	n/a	14.5000		
605	Uniform	n/a	14.5000		

LOAD CASE WS_45 deg, Member Loads

Member	Type	Direction	Magnitude at Start (kips or kips-ft)	Magnitude at End (kips or kips-ft)	Start Position (x/L)	End Position from start (x/L)
1	Uniform Force	Global Y	0.2390		0.0000	1.0000
2	Uniform Force	Global Y	0.2390		0.0000	1.0000
3	Uniform Force	Global Y	0.2390		0.0000	1.0000
4	Uniform Force	Global Y	0.2390		0.0000	1.0000
5	Uniform Force	Global Y	0.2390		0.0000	1.0000
6	Uniform Force	Global Y	0.2390		0.0000	1.0000
7	Uniform Force	Global Y	0.2390		0.0000	1.0000
8	Uniform Force	Global Y	0.2390		0.0000	1.0000
9	Uniform Force	Global Y	0.2390		0.0000	1.0000
10	Uniform Force	Global Y	0.2390		0.0000	1.0000

LOAD CASE WS 45 deg, Member Loads

Member	Type	Direction	Magnitude at Start (kips or kips-ft)	Magnitude at End (kips or kips-ft)	Start Position (x/L)	End Position from start (x/L)
11	Uniform Force	Global Y	0.2390		0.0000	1.0000
12	Uniform Force	Global Y	0.2390		0.0000	1.0000
13	Uniform Force	Global Y	0.2390		0.0000	1.0000
14	Uniform Force	Global Y	0.2390		0.0000	1.0000
15	Uniform Force	Global Y	0.2390		0.0000	1.0000
16	Uniform Force	Global Y	0.2390		0.0000	1.0000
17	Uniform Force	Global Y	0.2390		0.0000	1.0000
18	Uniform Force	Global Y	0.2390		0.0000	1.0000
19	Uniform Force	Global Y	0.2390		0.0000	1.0000
20	Uniform Force	Global Y	0.2390		0.0000	1.0000
21	Uniform Force	Global Y	0.2390		0.0000	1.0000
22	Uniform Force	Global Y	0.2390		0.0000	1.0000
23	Uniform Force	Global Y	0.2390		0.0000	1.0000
24	Uniform Force	Global Y	0.2390		0.0000	1.0000
25	Uniform Force	Global Y	0.2390		0.0000	1.0000
26	Uniform Force	Global Y	0.2390		0.0000	1.0000
27	Uniform Force	Global Y	0.2390		0.0000	1.0000
28	Uniform Force	Global Y	0.2390		0.0000	1.0000
29	Uniform Force	Global Y	0.2390		0.0000	1.0000
30	Uniform Force	Global Y	0.2390		0.0000	1.0000
31	Uniform Force	Global Y	0.2390		0.0000	1.0000
32	Uniform Force	Global Y	0.2390		0.0000	1.0000
33	Uniform Force	Global Y	0.2390		0.0000	1.0000
34	Uniform Force	Global Y	0.2390		0.0000	1.0000
35	Uniform Force	Global Y	0.2390		0.0000	1.0000
36	Uniform Force	Global Y	0.2390		0.0000	1.0000
37	Uniform Force	Global Y	0.2390		0.0000	1.0000
38	Uniform Force	Global Y	0.2390		0.0000	1.0000
39	Uniform Force	Global Y	0.2390		0.0000	1.0000
40	Uniform Force	Global Y	0.2390		0.0000	1.0000
41	Uniform Force	Global Y	0.2390		0.0000	1.0000
42	Uniform Force	Global Y	0.2390		0.0000	1.0000
43	Uniform Force	Global Y	0.2390		0.0000	1.0000
44	Uniform Force	Global Y	0.2390		0.0000	1.0000

LOAD CASE WS 45 deg, Member Loads

Member	Type	Direction	Magnitude at Start (kips or kips-ft)	Magnitude at End (kips or kips-ft)	Start Position (x/L)	End Position from start (x/L)
45	Uniform Force	Global Y	0.2390		0.0000	1.0000
46	Uniform Force	Global Y	0.2390		0.0000	1.0000
47	Uniform Force	Global Y	0.2390		0.0000	1.0000
48	Uniform Force	Global Y	0.2390		0.0000	1.0000
49	Uniform Force	Global Y	0.2390		0.0000	1.0000
50	Uniform Force	Global Y	0.2390		0.0000	1.0000
51	Uniform Force	Global Y	0.2390		0.0000	1.0000
52	Uniform Force	Global Y	0.2390		0.0000	1.0000
53	Uniform Force	Global Y	0.2390		0.0000	1.0000
54	Uniform Force	Global Y	0.2390		0.0000	1.0000
55	Uniform Force	Global Y	0.2390		0.0000	1.0000
56	Uniform Force	Global Y	0.2390		0.0000	1.0000
57	Uniform Force	Global Y	0.2390		0.0000	1.0000
101	Uniform Force	Global Y	0.0820		0.0000	1.0000
102	Uniform Force	Global Y	0.0820		0.0000	1.0000
103	Uniform Force	Global Y	0.0820		0.0000	1.0000
104	Uniform Force	Global Y	0.0820		0.0000	1.0000
105	Uniform Force	Global Y	0.0820		0.0000	1.0000
106	Uniform Force	Global Y	0.0820		0.0000	1.0000
107	Uniform Force	Global Y	0.0820		0.0000	1.0000
108	Uniform Force	Global Y	0.0820		0.0000	1.0000
109	Uniform Force	Global Y	0.0820		0.0000	1.0000
110	Uniform Force	Global Y	0.0820		0.0000	1.0000
111	Uniform Force	Global Y	0.0820		0.0000	1.0000
112	Uniform Force	Global Y	0.0820		0.0000	1.0000
113	Uniform Force	Global Y	0.0820		0.0000	1.0000
114	Uniform Force	Global Y	0.0820		0.0000	1.0000
115	Uniform Force	Global Y	0.0820		0.0000	1.0000
116	Uniform Force	Global Y	0.0820		0.0000	1.0000
117	Uniform Force	Global Y	0.0820		0.0000	1.0000
118	Uniform Force	Global Y	0.0820		0.0000	1.0000
119	Uniform Force	Global Y	0.0820		0.0000	1.0000
120	Uniform Force	Global Y	0.0820		0.0000	1.0000
121	Uniform Force	Global Y	0.0820		0.0000	1.0000

LOAD CASE WS 45 deg, Member Loads

Member	Type	Direction	Magnitude at Start (kips or kips-ft)	Magnitude at End (kips or kips-ft)	Start Position (x/L)	End Position from start (x/L)
122	Uniform Force	Global Y	0.0820		0.0000	1.0000
123	Uniform Force	Global Y	0.0820		0.0000	1.0000
124	Uniform Force	Global Y	0.0820		0.0000	1.0000
125	Uniform Force	Global Y	0.0820		0.0000	1.0000
126	Uniform Force	Global Y	0.0820		0.0000	1.0000
127	Uniform Force	Global Y	0.0820		0.0000	1.0000
128	Uniform Force	Global Y	0.0820		0.0000	1.0000
129	Uniform Force	Global Y	0.0820		0.0000	1.0000
130	Uniform Force	Global Y	0.0820		0.0000	1.0000
131	Uniform Force	Global Y	0.0820		0.0000	1.0000
132	Uniform Force	Global Y	0.0820		0.0000	1.0000
133	Uniform Force	Global Y	0.0820		0.0000	1.0000
134	Uniform Force	Global Y	0.0820		0.0000	1.0000
135	Uniform Force	Global Y	0.0820		0.0000	1.0000
136	Uniform Force	Global Y	0.0820		0.0000	1.0000
137	Uniform Force	Global Y	0.0820		0.0000	1.0000
138	Uniform Force	Global Y	0.0820		0.0000	1.0000
139	Uniform Force	Global Y	0.0820		0.0000	1.0000
140	Uniform Force	Global Y	0.0820		0.0000	1.0000
141	Uniform Force	Global Y	0.0820		0.0000	1.0000
142	Uniform Force	Global Y	0.0820		0.0000	1.0000
143	Uniform Force	Global Y	0.0820		0.0000	1.0000
144	Uniform Force	Global Y	0.0820		0.0000	1.0000
145	Uniform Force	Global Y	0.0820		0.0000	1.0000
146	Uniform Force	Global Y	0.0820		0.0000	1.0000
147	Uniform Force	Global Y	0.0820		0.0000	1.0000
148	Uniform Force	Global Y	0.0820		0.0000	1.0000
149	Uniform Force	Global Y	0.0820		0.0000	1.0000
150	Uniform Force	Global Y	0.0820		0.0000	1.0000
151	Uniform Force	Global Y	0.0820		0.0000	1.0000
152	Uniform Force	Global Y	0.0820		0.0000	1.0000
153	Uniform Force	Global Y	0.0820		0.0000	1.0000
154	Uniform Force	Global Y	0.0820		0.0000	1.0000
155	Uniform Force	Global Y	0.0820		0.0000	1.0000

LOAD CASE WS 45 deg, Member Loads

Member	Type	Direction	Magnitude at Start (kips or kips-ft)	Magnitude at End (kips or kips-ft)	Start Position (x/L)	End Position from start (x/L)
156	Uniform Force	Global Y	0.0820		0.0000	1.0000
157	Uniform Force	Global Y	0.0820		0.0000	1.0000
158	Uniform Force	Global Y	0.0820		0.0000	1.0000
159	Uniform Force	Global Y	0.0820		0.0000	1.0000
160	Uniform Force	Global Y	0.0820		0.0000	1.0000
701	Uniform Force	Global Y	0.0760		0.0000	1.0000
702	Uniform Force	Global Y	0.0760		0.0000	1.0000
703	Uniform Force	Global Y	0.0760		0.0000	1.0000
704	Uniform Force	Global Y	0.0760		0.0000	1.0000
705	Uniform Force	Global Y	0.0760		0.0000	1.0000
706	Uniform Force	Global Y	0.0760		0.0000	1.0000
707	Uniform Force	Global Y	0.0760		0.0000	1.0000
708	Uniform Force	Global Y	0.0760		0.0000	1.0000
709	Uniform Force	Global Y	0.0760		0.0000	1.0000
710	Uniform Force	Global Y	0.0760		0.0000	1.0000
711	Uniform Force	Global Y	0.0760		0.0000	1.0000
712	Uniform Force	Global Y	0.0760		0.0000	1.0000
713	Uniform Force	Global Y	0.0760		0.0000	1.0000
714	Uniform Force	Global Y	0.0760		0.0000	1.0000
715	Uniform Force	Global Y	0.0760		0.0000	1.0000
716	Uniform Force	Global Y	0.0760		0.0000	1.0000
717	Uniform Force	Global Y	0.0760		0.0000	1.0000
718	Uniform Force	Global Y	0.0760		0.0000	1.0000
719	Uniform Force	Global Y	0.0760		0.0000	1.0000
720	Uniform Force	Global Y	0.0760		0.0000	1.0000
721	Uniform Force	Global Y	0.0760		0.0000	1.0000
722	Uniform Force	Global Y	0.0760		0.0000	1.0000
723	Uniform Force	Global Y	0.0760		0.0000	1.0000
724	Uniform Force	Global Y	0.0760		0.0000	1.0000
725	Uniform Force	Global Y	0.0760		0.0000	1.0000
726	Uniform Force	Global Y	0.0760		0.0000	1.0000
727	Uniform Force	Global Y	0.0760		0.0000	1.0000
728	Uniform Force	Global Y	0.0760		0.0000	1.0000
729	Uniform Force	Global Y	0.0760		0.0000	1.0000

LOAD CASE WS 45 deg, Member Loads

Member	Type	Direction	Magnitude at Start (kips or kips-ft)	Magnitude at End (kips or kips-ft)	Start Position (x/L)	End Position from start (x/L)
730	Uniform Force	Global Y	0.0760		0.0000	1.0000
731	Uniform Force	Global Y	0.0760		0.0000	1.0000
732	Uniform Force	Global Y	0.0760		0.0000	1.0000
733	Uniform Force	Global Y	0.0760		0.0000	1.0000
740	Uniform Force	Global Y	0.0760		0.0000	1.0000
741	Uniform Force	Global Y	0.0760		0.0000	1.0000
742	Uniform Force	Global Y	0.0760		0.0000	1.0000
743	Uniform Force	Global Y	0.0760		0.0000	1.0000
744	Uniform Force	Global Y	0.0760		0.0000	1.0000
745	Uniform Force	Global Y	0.0760		0.0000	1.0000
746	Uniform Force	Global Y	0.0760		0.0000	1.0000
747	Uniform Force	Global Y	0.0760		0.0000	1.0000
748	Uniform Force	Global Y	0.0760		0.0000	1.0000
749	Uniform Force	Global Y	0.0760		0.0000	1.0000
750	Uniform Force	Global Y	0.0760		0.0000	1.0000
751	Uniform Force	Global Y	0.0760		0.0000	1.0000
752	Uniform Force	Global Y	0.0760		0.0000	1.0000
753	Uniform Force	Global Y	0.0760		0.0000	1.0000
754	Uniform Force	Global Y	0.0760		0.0000	1.0000
755	Uniform Force	Global Y	0.0760		0.0000	1.0000
756	Uniform Force	Global Y	0.0760		0.0000	1.0000
757	Uniform Force	Global Y	0.0760		0.0000	1.0000
758	Uniform Force	Global Y	0.0760		0.0000	1.0000
759	Uniform Force	Global Y	0.0760		0.0000	1.0000
760	Uniform Force	Global Y	0.0760		0.0000	1.0000
761	Uniform Force	Global Y	0.0760		0.0000	1.0000
762	Uniform Force	Global Y	0.0760		0.0000	1.0000
763	Uniform Force	Global Y	0.0760		0.0000	1.0000
764	Uniform Force	Global Y	0.0760		0.0000	1.0000
765	Uniform Force	Global Y	0.0760		0.0000	1.0000
766	Uniform Force	Global Y	0.0760		0.0000	1.0000
767	Uniform Force	Global Y	0.0760		0.0000	1.0000
768	Uniform Force	Global Y	0.0760		0.0000	1.0000
769	Uniform Force	Global Y	0.0760		0.0000	1.0000

LOAD CASE WS 45 deg, Member Loads

Member	Type	Direction	Magnitude at Start (kips or kips-ft)	Magnitude at End (kips or kips-ft)	Start Position (x/L)	End Position from start (x/L)
770	Uniform Force	Global Y	0.0760		0.0000	1.0000
771	Uniform Force	Global Y	0.0760		0.0000	1.0000
772	Uniform Force	Global Y	0.0760		0.0000	1.0000
1	Uniform Moment	Local x	-0.6000		0.0000	1.0000
2	Uniform Moment	Local x	-0.6000		0.0000	1.0000
3	Uniform Moment	Local x	-0.6000		0.0000	1.0000
4	Uniform Moment	Local x	-0.6000		0.0000	1.0000
5	Uniform Moment	Local x	-0.6000		0.0000	1.0000
6	Uniform Moment	Local x	-0.6000		0.0000	1.0000
7	Uniform Moment	Local x	-0.6000		0.0000	1.0000
8	Uniform Moment	Local x	-0.6000		0.0000	1.0000
9	Uniform Moment	Local x	-0.6000		0.0000	1.0000
10	Uniform Moment	Local x	-0.6000		0.0000	1.0000
11	Uniform Moment	Local x	-0.6000		0.0000	1.0000
12	Uniform Moment	Local x	-0.6000		0.0000	1.0000
13	Uniform Moment	Local x	-0.6000		0.0000	1.0000
14	Uniform Moment	Local x	-0.6000		0.0000	1.0000
15	Uniform Moment	Local x	-0.6000		0.0000	1.0000
16	Uniform Moment	Local x	-0.6000		0.0000	1.0000
17	Uniform Moment	Local x	-0.6000		0.0000	1.0000
18	Uniform Moment	Local x	-0.6000		0.0000	1.0000
19	Uniform Moment	Local x	-0.6000		0.0000	1.0000
20	Uniform Moment	Local x	-0.6000		0.0000	1.0000
21	Uniform Moment	Local x	-0.6000		0.0000	1.0000
22	Uniform Moment	Local x	-0.6000		0.0000	1.0000
23	Uniform Moment	Local x	-0.6000		0.0000	1.0000
24	Uniform Moment	Local x	-0.6000		0.0000	1.0000
25	Uniform Moment	Local x	-0.6000		0.0000	1.0000
26	Uniform Moment	Local x	-0.6000		0.0000	1.0000
27	Uniform Moment	Local x	-0.6000		0.0000	1.0000
28	Uniform Moment	Local x	-0.6000		0.0000	1.0000
29	Uniform Moment	Local x	-0.6000		0.0000	1.0000
30	Uniform Moment	Local x	-0.6000		0.0000	1.0000
31	Uniform Moment	Local x	-0.6000		0.0000	1.0000

LOAD CASE WS 45 deg, Member Loads

Member	Type	Direction	Magnitude at Start (kips or kips-ft)	Magnitude at End (kips or kips-ft)	Start Position (x/L)	End Position from start (x/L)
32	Uniform Moment	Local x	-0.6000		0.0000	1.0000
33	Uniform Moment	Local x	-0.6000		0.0000	1.0000
34	Uniform Moment	Local x	-0.6000		0.0000	1.0000
35	Uniform Moment	Local x	-0.6000		0.0000	1.0000
36	Uniform Moment	Local x	-0.6000		0.0000	1.0000
37	Uniform Moment	Local x	-0.6000		0.0000	1.0000
38	Uniform Moment	Local x	-0.6000		0.0000	1.0000
39	Uniform Moment	Local x	-0.6000		0.0000	1.0000
40	Uniform Moment	Local x	-0.6000		0.0000	1.0000
41	Uniform Moment	Local x	-0.6000		0.0000	1.0000
42	Uniform Moment	Local x	-0.6000		0.0000	1.0000
43	Uniform Moment	Local x	-0.6000		0.0000	1.0000
44	Uniform Moment	Local x	-0.6000		0.0000	1.0000
45	Uniform Moment	Local x	-0.6000		0.0000	1.0000
46	Uniform Moment	Local x	-0.6000		0.0000	1.0000
47	Uniform Moment	Local x	-0.6000		0.0000	1.0000
48	Uniform Moment	Local x	-0.6000		0.0000	1.0000
49	Uniform Moment	Local x	-0.6000		0.0000	1.0000
50	Uniform Moment	Local x	-0.6000		0.0000	1.0000
51	Uniform Moment	Local x	-0.6000		0.0000	1.0000
52	Uniform Moment	Local x	-0.6000		0.0000	1.0000
53	Uniform Moment	Local x	-0.6000		0.0000	1.0000
54	Uniform Moment	Local x	-0.6000		0.0000	1.0000
55	Uniform Moment	Local x	-0.6000		0.0000	1.0000
56	Uniform Moment	Local x	-0.6000		0.0000	1.0000
57	Uniform Moment	Local x	-0.6000		0.0000	1.0000
1	Uniform Force	Local x	0.2100		0.0000	1.0000
2	Uniform Force	Local x	0.2100		0.0000	1.0000
3	Uniform Force	Local x	0.2100		0.0000	1.0000
4	Uniform Force	Local x	0.2100		0.0000	1.0000
5	Uniform Force	Local x	0.2100		0.0000	1.0000
6	Uniform Force	Local x	0.2100		0.0000	1.0000
7	Uniform Force	Local x	0.2100		0.0000	1.0000
8	Uniform Force	Local x	0.2100		0.0000	1.0000

LOAD CASE WS 45 deg, Member Loads

Member	Type	Direction	Magnitude at Start (kips or kips-ft)	Magnitude at End (kips or kips-ft)	Start Position (x/L)	End Position from start (x/L)
9	Uniform Force	Local x	0.2100		0.0000	1.0000
10	Uniform Force	Local x	0.2100		0.0000	1.0000
11	Uniform Force	Local x	0.2100		0.0000	1.0000
12	Uniform Force	Local x	0.2100		0.0000	1.0000
13	Uniform Force	Local x	0.2100		0.0000	1.0000
14	Uniform Force	Local x	0.2100		0.0000	1.0000
15	Uniform Force	Local x	0.2100		0.0000	1.0000
16	Uniform Force	Local x	0.2100		0.0000	1.0000
17	Uniform Force	Local x	0.2100		0.0000	1.0000
18	Uniform Force	Local x	0.2100		0.0000	1.0000
19	Uniform Force	Local x	0.2100		0.0000	1.0000
20	Uniform Force	Local x	0.2100		0.0000	1.0000
21	Uniform Force	Local x	0.2100		0.0000	1.0000
22	Uniform Force	Local x	0.2100		0.0000	1.0000
23	Uniform Force	Local x	0.2100		0.0000	1.0000
24	Uniform Force	Local x	0.2100		0.0000	1.0000
25	Uniform Force	Local x	0.2100		0.0000	1.0000
26	Uniform Force	Local x	0.2100		0.0000	1.0000
27	Uniform Force	Local x	0.2100		0.0000	1.0000
28	Uniform Force	Local x	0.2100		0.0000	1.0000
29	Uniform Force	Local x	0.2100		0.0000	1.0000
30	Uniform Force	Local x	0.2100		0.0000	1.0000
31	Uniform Force	Local x	0.2100		0.0000	1.0000
32	Uniform Force	Local x	0.2100		0.0000	1.0000
33	Uniform Force	Local x	0.2100		0.0000	1.0000
34	Uniform Force	Local x	0.2100		0.0000	1.0000
35	Uniform Force	Local x	0.2100		0.0000	1.0000
36	Uniform Force	Local x	0.2100		0.0000	1.0000
37	Uniform Force	Local x	0.2100		0.0000	1.0000
38	Uniform Force	Local x	0.2100		0.0000	1.0000
39	Uniform Force	Local x	0.2100		0.0000	1.0000
40	Uniform Force	Local x	0.2100		0.0000	1.0000
41	Uniform Force	Local x	0.2100		0.0000	1.0000
42	Uniform Force	Local x	0.2100		0.0000	1.0000

LOAD CASE WS 45 deg, Member Loads

Member	Type	Direction	Magnitude at Start (kips or kips-ft)	Magnitude at End (kips or kips-ft)	Start Position (x/L)	End Position from start (x/L)
43	Uniform Force	Local x	0.2100		0.0000	1.0000
44	Uniform Force	Local x	0.2100		0.0000	1.0000
45	Uniform Force	Local x	0.2100		0.0000	1.0000
46	Uniform Force	Local x	0.2100		0.0000	1.0000
47	Uniform Force	Local x	0.2100		0.0000	1.0000
48	Uniform Force	Local x	0.2100		0.0000	1.0000
49	Uniform Force	Local x	0.2100		0.0000	1.0000
50	Uniform Force	Local x	0.2100		0.0000	1.0000
51	Uniform Force	Local x	0.2100		0.0000	1.0000
52	Uniform Force	Local x	0.2100		0.0000	1.0000
53	Uniform Force	Local x	0.2100		0.0000	1.0000
54	Uniform Force	Local x	0.2100		0.0000	1.0000
55	Uniform Force	Local x	0.2100		0.0000	1.0000
56	Uniform Force	Local x	0.2100		0.0000	1.0000
57	Uniform Force	Local x	0.2100		0.0000	1.0000
101	Uniform Force	Local x	0.0720		0.0000	1.0000
102	Uniform Force	Local x	0.0720		0.0000	1.0000
103	Uniform Force	Local x	0.0720		0.0000	1.0000
104	Uniform Force	Local x	0.0720		0.0000	1.0000
105	Uniform Force	Local x	0.0720		0.0000	1.0000
106	Uniform Force	Local x	0.0720		0.0000	1.0000
107	Uniform Force	Local x	0.0720		0.0000	1.0000
108	Uniform Force	Local x	0.0720		0.0000	1.0000
109	Uniform Force	Local x	0.0720		0.0000	1.0000
110	Uniform Force	Local x	0.0720		0.0000	1.0000
111	Uniform Force	Local x	0.0720		0.0000	1.0000
112	Uniform Force	Local x	0.0720		0.0000	1.0000
113	Uniform Force	Local x	0.0720		0.0000	1.0000
114	Uniform Force	Local x	0.0720		0.0000	1.0000
115	Uniform Force	Local x	0.0720		0.0000	1.0000
116	Uniform Force	Local x	0.0720		0.0000	1.0000
117	Uniform Force	Local x	0.0720		0.0000	1.0000
118	Uniform Force	Local x	0.0720		0.0000	1.0000
119	Uniform Force	Local x	0.0720		0.0000	1.0000

LOAD CASE WS 45 deg, Member Loads

Member	Type	Direction	Magnitude at Start (kips or kips-ft)	Magnitude at End (kips or kips-ft)	Start Position (x/L)	End Position from start (x/L)
120	Uniform Force	Local x	0.0720		0.0000	1.0000
121	Uniform Force	Local x	0.0720		0.0000	1.0000
122	Uniform Force	Local x	0.0720		0.0000	1.0000
123	Uniform Force	Local x	0.0720		0.0000	1.0000
124	Uniform Force	Local x	0.0720		0.0000	1.0000
125	Uniform Force	Local x	0.0720		0.0000	1.0000
126	Uniform Force	Local x	0.0720		0.0000	1.0000
127	Uniform Force	Local x	0.0720		0.0000	1.0000
128	Uniform Force	Local x	0.0720		0.0000	1.0000
129	Uniform Force	Local x	0.0720		0.0000	1.0000
130	Uniform Force	Local x	0.0720		0.0000	1.0000
131	Uniform Force	Local x	0.0720		0.0000	1.0000
132	Uniform Force	Local x	0.0720		0.0000	1.0000
133	Uniform Force	Local x	0.0720		0.0000	1.0000
134	Uniform Force	Local x	0.0720		0.0000	1.0000
135	Uniform Force	Local x	0.0720		0.0000	1.0000
136	Uniform Force	Local x	0.0720		0.0000	1.0000
137	Uniform Force	Local x	0.0720		0.0000	1.0000
138	Uniform Force	Local x	0.0720		0.0000	1.0000
139	Uniform Force	Local x	0.0720		0.0000	1.0000
140	Uniform Force	Local x	0.0720		0.0000	1.0000
141	Uniform Force	Local x	0.0720		0.0000	1.0000
142	Uniform Force	Local x	0.0720		0.0000	1.0000
143	Uniform Force	Local x	0.0720		0.0000	1.0000
144	Uniform Force	Local x	0.0720		0.0000	1.0000
145	Uniform Force	Local x	0.0720		0.0000	1.0000
146	Uniform Force	Local x	0.0720		0.0000	1.0000
147	Uniform Force	Local x	0.0720		0.0000	1.0000
148	Uniform Force	Local x	0.0720		0.0000	1.0000
149	Uniform Force	Local x	0.0720		0.0000	1.0000
150	Uniform Force	Local x	0.0720		0.0000	1.0000
151	Uniform Force	Local x	0.0720		0.0000	1.0000
152	Uniform Force	Local x	0.0720		0.0000	1.0000
153	Uniform Force	Local x	0.0720		0.0000	1.0000

LOAD CASE WS 45 deg, Member Loads

Member	Type	Direction	Magnitude at Start (kips or kips-ft)	Magnitude at End (kips or kips-ft)	Start Position (x/L)	End Position from start (x/L)
154	Uniform Force	Local x	0.0720		0.0000	1.0000
155	Uniform Force	Local x	0.0720		0.0000	1.0000
156	Uniform Force	Local x	0.0720		0.0000	1.0000
157	Uniform Force	Local x	0.0720		0.0000	1.0000
158	Uniform Force	Local x	0.0720		0.0000	1.0000
159	Uniform Force	Local x	0.0720		0.0000	1.0000
160	Uniform Force	Local x	0.0720		0.0000	1.0000
701	Uniform Force	Global X	0.0660		0.0000	1.0000
702	Uniform Force	Global X	0.0660		0.0000	1.0000
703	Uniform Force	Global X	0.0660		0.0000	1.0000
704	Uniform Force	Global X	0.0660		0.0000	1.0000
705	Uniform Force	Global X	0.0660		0.0000	1.0000
706	Uniform Force	Global X	0.0660		0.0000	1.0000
707	Uniform Force	Global X	0.0660		0.0000	1.0000
708	Uniform Force	Global X	0.0660		0.0000	1.0000
709	Uniform Force	Global X	0.0660		0.0000	1.0000
710	Uniform Force	Global X	0.0660		0.0000	1.0000
711	Uniform Force	Global X	0.0660		0.0000	1.0000
712	Uniform Force	Global X	0.0660		0.0000	1.0000
713	Uniform Force	Global X	0.0660		0.0000	1.0000
714	Uniform Force	Global X	0.0660		0.0000	1.0000
715	Uniform Force	Global X	0.0660		0.0000	1.0000
716	Uniform Force	Global X	0.0660		0.0000	1.0000
717	Uniform Force	Global X	0.0660		0.0000	1.0000
718	Uniform Force	Global X	0.0660		0.0000	1.0000
719	Uniform Force	Global X	0.0660		0.0000	1.0000
720	Uniform Force	Global X	0.0660		0.0000	1.0000
721	Uniform Force	Global X	0.0660		0.0000	1.0000
722	Uniform Force	Global X	0.0660		0.0000	1.0000
723	Uniform Force	Global X	0.0660		0.0000	1.0000
724	Uniform Force	Global X	0.0660		0.0000	1.0000
725	Uniform Force	Global X	0.0660		0.0000	1.0000
726	Uniform Force	Global X	0.0660		0.0000	1.0000
727	Uniform Force	Global X	0.0660		0.0000	1.0000

LOAD CASE WS 45 deg, Member Loads

Member	Type	Direction	Magnitude at Start (kips or kips-ft)	Magnitude at End (kips or kips-ft)	Start Position (x/L)	End Position from start (x/L)
728	Uniform Force	Global X	0.0660		0.0000	1.0000
729	Uniform Force	Global X	0.0660		0.0000	1.0000
730	Uniform Force	Global X	0.0660		0.0000	1.0000
731	Uniform Force	Global X	0.0660		0.0000	1.0000
732	Uniform Force	Global X	0.0660		0.0000	1.0000
733	Uniform Force	Global X	0.0660		0.0000	1.0000
740	Uniform Force	Global X	0.0660		0.0000	1.0000
741	Uniform Force	Global X	0.0660		0.0000	1.0000
742	Uniform Force	Global X	0.0660		0.0000	1.0000
743	Uniform Force	Global X	0.0660		0.0000	1.0000
744	Uniform Force	Global X	0.0660		0.0000	1.0000
745	Uniform Force	Global X	0.0660		0.0000	1.0000
746	Uniform Force	Global X	0.0660		0.0000	1.0000
747	Uniform Force	Global X	0.0660		0.0000	1.0000
748	Uniform Force	Global X	0.0660		0.0000	1.0000
749	Uniform Force	Global X	0.0660		0.0000	1.0000
750	Uniform Force	Global X	0.0660		0.0000	1.0000
751	Uniform Force	Global X	0.0660		0.0000	1.0000
752	Uniform Force	Global X	0.0660		0.0000	1.0000
753	Uniform Force	Global X	0.0660		0.0000	1.0000
754	Uniform Force	Global X	0.0660		0.0000	1.0000
755	Uniform Force	Global X	0.0660		0.0000	1.0000
756	Uniform Force	Global X	0.0660		0.0000	1.0000
757	Uniform Force	Global X	0.0660		0.0000	1.0000
758	Uniform Force	Global X	0.0660		0.0000	1.0000
759	Uniform Force	Global X	0.0660		0.0000	1.0000
760	Uniform Force	Global X	0.0660		0.0000	1.0000
761	Uniform Force	Global X	0.0660		0.0000	1.0000
762	Uniform Force	Global X	0.0660		0.0000	1.0000
763	Uniform Force	Global X	0.0660		0.0000	1.0000
764	Uniform Force	Global X	0.0660		0.0000	1.0000
765	Uniform Force	Global X	0.0660		0.0000	1.0000
766	Uniform Force	Global X	0.0660		0.0000	1.0000
767	Uniform Force	Global X	0.0660		0.0000	1.0000

LOAD CASE WS 45 deg, Member Loads

Member	Type	Direction	Magnitude at Start (kips or kips-ft)	Magnitude at End (kips or kips-ft)	Start Position (x/L)	End Position from start (x/L)
768	Uniform Force	Global X	0.0660		0.0000	1.0000
769	Uniform Force	Global X	0.0660		0.0000	1.0000
770	Uniform Force	Global X	0.0660		0.0000	1.0000
771	Uniform Force	Global X	0.0660		0.0000	1.0000
772	Uniform Force	Global X	0.0660		0.0000	1.0000
2002	Uniform Force	Global Y	0.2800		0.0000	1.0000
2003	Uniform Force	Global Y	0.2800		0.0000	1.0000
2002	Trapezoidal Force	Global X	0.8600	0.6600	0.0000	1.0000
2003	Trapezoidal Force	Global X	0.6600	0.4700	0.0000	1.0000
1017	Uniform Force	Global Y	0.2350		0.0000	1.0000
1018	Uniform Force	Global Y	0.2350		0.0000	1.0000
1019	Uniform Force	Global Y	0.2350		0.0000	1.0000
1017	Uniform Force	Global X	0.0940		0.0000	1.0000
1018	Uniform Force	Global X	0.0940		0.0000	1.0000
1019	Uniform Force	Global X	0.0940		0.0000	1.0000
1013	Uniform Force	Global Y	0.2350		0.0000	1.0000
1014	Uniform Force	Global Y	0.2350		0.0000	1.0000
1015	Uniform Force	Global Y	0.2350		0.0000	1.0000
1013	Uniform Force	Global X	0.0940		0.0000	1.0000
1014	Uniform Force	Global X	0.0940		0.0000	1.0000
1015	Uniform Force	Global X	0.0940		0.0000	1.0000
3017	Uniform Force	Global Y	0.2350		0.0000	1.0000
3018	Uniform Force	Global Y	0.2350		0.0000	1.0000
3019	Uniform Force	Global Y	0.2350		0.0000	1.0000
3017	Uniform Force	Global X	0.0940		0.0000	1.0000
3018	Uniform Force	Global X	0.0940		0.0000	1.0000
3019	Uniform Force	Global X	0.0940		0.0000	1.0000
3013	Uniform Force	Global Y	0.2350		0.0000	1.0000
3014	Uniform Force	Global Y	0.2350		0.0000	1.0000
3015	Uniform Force	Global Y	0.2350		0.0000	1.0000
3013	Uniform Force	Global X	0.0940		0.0000	1.0000
3014	Uniform Force	Global X	0.0940		0.0000	1.0000
3015	Uniform Force	Global X	0.0940		0.0000	1.0000
1006	Uniform Force	Global X	0.2350		0.0000	1.0000

LOAD CASE WS 45 deg, Member Loads

Member	Type	Direction	Magnitude at Start (kips or kips-ft)	Magnitude at End (kips or kips-ft)	Start Position (x/L)	End Position from start (x/L)
1007	Uniform Force	Global X	0.2350		0.0000	1.0000
1008	Uniform Force	Global X	0.2350		0.0000	1.0000
1009	Uniform Force	Global X	0.2350		0.0000	1.0000
1010	Uniform Force	Global X	0.2350		0.0000	1.0000
1011	Uniform Force	Global X	0.2350		0.0000	1.0000
1012	Uniform Force	Global X	0.2350		0.0000	1.0000
3006	Uniform Force	Global X	0.2350		0.0000	1.0000
3007	Uniform Force	Global X	0.2350		0.0000	1.0000
3008	Uniform Force	Global X	0.2350		0.0000	1.0000
3009	Uniform Force	Global X	0.2350		0.0000	1.0000
3010	Uniform Force	Global X	0.2350		0.0000	1.0000
3011	Uniform Force	Global X	0.2350		0.0000	1.0000
3012	Uniform Force	Global X	0.2350		0.0000	1.0000
501	Uniform Force	Global Y	0.0690		0.0000	1.0000
502	Uniform Force	Global Y	0.0690		0.0000	1.0000
503	Uniform Force	Global Y	0.0690		0.0000	1.0000
504	Uniform Force	Global Y	0.0690		0.0000	1.0000
505	Uniform Force	Global Y	0.0690		0.0000	1.0000
601	Uniform Force	Global Y	0.0690		0.0000	1.0000
602	Uniform Force	Global Y	0.0690		0.0000	1.0000
603	Uniform Force	Global Y	0.0690		0.0000	1.0000
604	Uniform Force	Global Y	0.0690		0.0000	1.0000
605	Uniform Force	Global Y	0.0690		0.0000	1.0000
401	Uniform Force	Global Y	0.2800		0.0000	1.0000
402	Uniform Force	Global Y	0.2800		0.0000	1.0000
403	Uniform Force	Global Y	0.2800		0.0000	1.0000
405	Trapezoidal Force	Global Y	0.3600	0.3400	0.0000	1.0000
406	Trapezoidal Force	Global Y	0.3400	0.3300	0.0000	1.0000
407	Trapezoidal Force	Global Y	0.3300	0.3200	0.0000	1.0000
408	Trapezoidal Force	Global Y	0.3200	0.2900	0.0000	1.0000
409	Trapezoidal Force	Global Y	0.2900	0.2800	0.0000	1.0000
410	Trapezoidal Force	Global Y	0.2800	0.2600	0.0000	1.0000
411	Trapezoidal Force	Global Y	0.2600	0.2500	0.0000	1.0000
412	Trapezoidal Force	Global Y	0.2500	0.2400	0.0000	1.0000

LOAD CASE WS 45 deg, Member Loads

Member	Type	Direction	Magnitude at Start (kips or kips-ft)	Magnitude at End (kips or kips-ft)	Start Position (x/L)	End Position from start (x/L)
413	Trapezoidal Force	Global Y	0.2400	0.2300	0.0000	1.0000
501	Uniform Force	Global X	0.0690		0.0000	1.0000
502	Uniform Force	Global X	0.0690		0.0000	1.0000
503	Uniform Force	Global X	0.0690		0.0000	1.0000
504	Uniform Force	Global X	0.0690		0.0000	1.0000
505	Uniform Force	Global X	0.0690		0.0000	1.0000
601	Uniform Force	Global X	0.0690		0.0000	1.0000
602	Uniform Force	Global X	0.0690		0.0000	1.0000
603	Uniform Force	Global X	0.0690		0.0000	1.0000
604	Uniform Force	Global X	0.0690		0.0000	1.0000
605	Uniform Force	Global X	0.0690		0.0000	1.0000
401	Uniform Force	Global X	0.2350		0.0000	1.0000
402	Uniform Force	Global X	0.2350		0.0000	1.0000
403	Uniform Force	Global X	0.2350		0.0000	1.0000
405	Trapezoidal Force	Global X	0.3600	0.3400	0.0000	1.0000
406	Trapezoidal Force	Global X	0.3400	0.3300	0.0000	1.0000
407	Trapezoidal Force	Global X	0.3300	0.3200	0.0000	1.0000
408	Trapezoidal Force	Global X	0.3200	0.2900	0.0000	1.0000
409	Trapezoidal Force	Global X	0.2900	0.2800	0.0000	1.0000
410	Trapezoidal Force	Global X	0.2800	0.2600	0.0000	1.0000
411	Trapezoidal Force	Global X	0.2600	0.2500	0.0000	1.0000
412	Trapezoidal Force	Global X	0.2500	0.2400	0.0000	1.0000
413	Trapezoidal Force	Global X	0.2400	0.2300	0.0000	1.0000

LOAD CASE WS_30 deg, Member Loads

Member	Type	Direction	Magnitude at Start (kips or kips-ft)	Magnitude at End (kips or kips-ft)	Start Position (x/L)	End Position from start (x/L)
1	Uniform Force	Global Y	0.3310		0.0000	1.0000
2	Uniform Force	Global Y	0.3310		0.0000	1.0000
3	Uniform Force	Global Y	0.3310		0.0000	1.0000
4	Uniform Force	Global Y	0.3310		0.0000	1.0000
5	Uniform Force	Global Y	0.3310		0.0000	1.0000
6	Uniform Force	Global Y	0.3310		0.0000	1.0000

LOAD CASE WS 30 deg, Member Loads

Member	Type	Direction	Magnitude at Start (kips or kips-ft)	Magnitude at End (kips or kips-ft)	Start Position (x/L)	End Position from start (x/L)
7	Uniform Force	Global Y	0.3310		0.0000	1.0000
8	Uniform Force	Global Y	0.3310		0.0000	1.0000
9	Uniform Force	Global Y	0.3310		0.0000	1.0000
10	Uniform Force	Global Y	0.3310		0.0000	1.0000
11	Uniform Force	Global Y	0.3310		0.0000	1.0000
12	Uniform Force	Global Y	0.3310		0.0000	1.0000
13	Uniform Force	Global Y	0.3310		0.0000	1.0000
14	Uniform Force	Global Y	0.3310		0.0000	1.0000
15	Uniform Force	Global Y	0.3310		0.0000	1.0000
16	Uniform Force	Global Y	0.3310		0.0000	1.0000
17	Uniform Force	Global Y	0.3310		0.0000	1.0000
18	Uniform Force	Global Y	0.3310		0.0000	1.0000
19	Uniform Force	Global Y	0.3310		0.0000	1.0000
20	Uniform Force	Global Y	0.3310		0.0000	1.0000
21	Uniform Force	Global Y	0.3310		0.0000	1.0000
22	Uniform Force	Global Y	0.3310		0.0000	1.0000
23	Uniform Force	Global Y	0.3310		0.0000	1.0000
24	Uniform Force	Global Y	0.3310		0.0000	1.0000
25	Uniform Force	Global Y	0.3310		0.0000	1.0000
26	Uniform Force	Global Y	0.3310		0.0000	1.0000
27	Uniform Force	Global Y	0.3310		0.0000	1.0000
28	Uniform Force	Global Y	0.3310		0.0000	1.0000
29	Uniform Force	Global Y	0.3310		0.0000	1.0000
30	Uniform Force	Global Y	0.3310		0.0000	1.0000
31	Uniform Force	Global Y	0.3310		0.0000	1.0000
32	Uniform Force	Global Y	0.3310		0.0000	1.0000
33	Uniform Force	Global Y	0.3310		0.0000	1.0000
34	Uniform Force	Global Y	0.3310		0.0000	1.0000
35	Uniform Force	Global Y	0.3310		0.0000	1.0000
36	Uniform Force	Global Y	0.3310		0.0000	1.0000
37	Uniform Force	Global Y	0.3310		0.0000	1.0000
38	Uniform Force	Global Y	0.3310		0.0000	1.0000
39	Uniform Force	Global Y	0.3310		0.0000	1.0000
40	Uniform Force	Global Y	0.3310		0.0000	1.0000

LOAD CASE WS 30 deg, Member Loads

Member	Type	Direction	Magnitude at Start (kips or kips-ft)	Magnitude at End (kips or kips-ft)	Start Position (x/L)	End Position from start (x/L)
41	Uniform Force	Global Y	0.3310		0.0000	1.0000
42	Uniform Force	Global Y	0.3310		0.0000	1.0000
43	Uniform Force	Global Y	0.3310		0.0000	1.0000
44	Uniform Force	Global Y	0.3310		0.0000	1.0000
45	Uniform Force	Global Y	0.3310		0.0000	1.0000
46	Uniform Force	Global Y	0.3310		0.0000	1.0000
47	Uniform Force	Global Y	0.3310		0.0000	1.0000
48	Uniform Force	Global Y	0.3310		0.0000	1.0000
49	Uniform Force	Global Y	0.3310		0.0000	1.0000
50	Uniform Force	Global Y	0.3310		0.0000	1.0000
51	Uniform Force	Global Y	0.3310		0.0000	1.0000
52	Uniform Force	Global Y	0.3310		0.0000	1.0000
53	Uniform Force	Global Y	0.3310		0.0000	1.0000
54	Uniform Force	Global Y	0.3310		0.0000	1.0000
55	Uniform Force	Global Y	0.3310		0.0000	1.0000
56	Uniform Force	Global Y	0.3310		0.0000	1.0000
57	Uniform Force	Global Y	0.3310		0.0000	1.0000
101	Uniform Force	Global Y	0.1130		0.0000	1.0000
102	Uniform Force	Global Y	0.1130		0.0000	1.0000
103	Uniform Force	Global Y	0.1130		0.0000	1.0000
104	Uniform Force	Global Y	0.1130		0.0000	1.0000
105	Uniform Force	Global Y	0.1130		0.0000	1.0000
106	Uniform Force	Global Y	0.1130		0.0000	1.0000
107	Uniform Force	Global Y	0.1130		0.0000	1.0000
108	Uniform Force	Global Y	0.1130		0.0000	1.0000
109	Uniform Force	Global Y	0.1130		0.0000	1.0000
110	Uniform Force	Global Y	0.1130		0.0000	1.0000
111	Uniform Force	Global Y	0.1130		0.0000	1.0000
112	Uniform Force	Global Y	0.1130		0.0000	1.0000
113	Uniform Force	Global Y	0.1130		0.0000	1.0000
114	Uniform Force	Global Y	0.1130		0.0000	1.0000
115	Uniform Force	Global Y	0.1130		0.0000	1.0000
116	Uniform Force	Global Y	0.1130		0.0000	1.0000
117	Uniform Force	Global Y	0.1130		0.0000	1.0000

LOAD CASE WS 30 deg, Member Loads

Member	Type	Direction	Magnitude at Start (kips or kips-ft)	Magnitude at End (kips or kips-ft)	Start Position (x/L)	End Position from start (x/L)
118	Uniform Force	Global Y	0.1130		0.0000	1.0000
119	Uniform Force	Global Y	0.1130		0.0000	1.0000
120	Uniform Force	Global Y	0.1130		0.0000	1.0000
121	Uniform Force	Global Y	0.1130		0.0000	1.0000
122	Uniform Force	Global Y	0.1130		0.0000	1.0000
123	Uniform Force	Global Y	0.1130		0.0000	1.0000
124	Uniform Force	Global Y	0.1130		0.0000	1.0000
125	Uniform Force	Global Y	0.1130		0.0000	1.0000
126	Uniform Force	Global Y	0.1130		0.0000	1.0000
127	Uniform Force	Global Y	0.1130		0.0000	1.0000
128	Uniform Force	Global Y	0.1130		0.0000	1.0000
129	Uniform Force	Global Y	0.1130		0.0000	1.0000
130	Uniform Force	Global Y	0.1130		0.0000	1.0000
131	Uniform Force	Global Y	0.1130		0.0000	1.0000
132	Uniform Force	Global Y	0.1130		0.0000	1.0000
133	Uniform Force	Global Y	0.1130		0.0000	1.0000
134	Uniform Force	Global Y	0.1130		0.0000	1.0000
135	Uniform Force	Global Y	0.1130		0.0000	1.0000
136	Uniform Force	Global Y	0.1130		0.0000	1.0000
137	Uniform Force	Global Y	0.1130		0.0000	1.0000
138	Uniform Force	Global Y	0.1130		0.0000	1.0000
139	Uniform Force	Global Y	0.1130		0.0000	1.0000
140	Uniform Force	Global Y	0.1130		0.0000	1.0000
141	Uniform Force	Global Y	0.1130		0.0000	1.0000
142	Uniform Force	Global Y	0.1130		0.0000	1.0000
143	Uniform Force	Global Y	0.1130		0.0000	1.0000
144	Uniform Force	Global Y	0.1130		0.0000	1.0000
145	Uniform Force	Global Y	0.1130		0.0000	1.0000
146	Uniform Force	Global Y	0.1130		0.0000	1.0000
147	Uniform Force	Global Y	0.1130		0.0000	1.0000
148	Uniform Force	Global Y	0.1130		0.0000	1.0000
149	Uniform Force	Global Y	0.1130		0.0000	1.0000
150	Uniform Force	Global Y	0.1130		0.0000	1.0000
151	Uniform Force	Global Y	0.1130		0.0000	1.0000

LOAD CASE WS 30 deg, Member Loads

Member	Type	Direction	Magnitude at Start (kips or kips-ft)	Magnitude at End (kips or kips-ft)	Start Position (x/L)	End Position from start (x/L)
152	Uniform Force	Global Y	0.1130		0.0000	1.0000
153	Uniform Force	Global Y	0.1130		0.0000	1.0000
154	Uniform Force	Global Y	0.1130		0.0000	1.0000
155	Uniform Force	Global Y	0.1130		0.0000	1.0000
156	Uniform Force	Global Y	0.1130		0.0000	1.0000
157	Uniform Force	Global Y	0.1130		0.0000	1.0000
158	Uniform Force	Global Y	0.1130		0.0000	1.0000
159	Uniform Force	Global Y	0.1130		0.0000	1.0000
160	Uniform Force	Global Y	0.1130		0.0000	1.0000
701	Uniform Force	Global Y	0.1040		0.0000	1.0000
702	Uniform Force	Global Y	0.1040		0.0000	1.0000
703	Uniform Force	Global Y	0.1040		0.0000	1.0000
704	Uniform Force	Global Y	0.1040		0.0000	1.0000
705	Uniform Force	Global Y	0.1040		0.0000	1.0000
706	Uniform Force	Global Y	0.1040		0.0000	1.0000
707	Uniform Force	Global Y	0.1040		0.0000	1.0000
708	Uniform Force	Global Y	0.1040		0.0000	1.0000
709	Uniform Force	Global Y	0.1040		0.0000	1.0000
710	Uniform Force	Global Y	0.1040		0.0000	1.0000
711	Uniform Force	Global Y	0.1040		0.0000	1.0000
712	Uniform Force	Global Y	0.1040		0.0000	1.0000
713	Uniform Force	Global Y	0.1040		0.0000	1.0000
714	Uniform Force	Global Y	0.1040		0.0000	1.0000
715	Uniform Force	Global Y	0.1040		0.0000	1.0000
716	Uniform Force	Global Y	0.1040		0.0000	1.0000
717	Uniform Force	Global Y	0.1040		0.0000	1.0000
718	Uniform Force	Global Y	0.1040		0.0000	1.0000
719	Uniform Force	Global Y	0.1040		0.0000	1.0000
720	Uniform Force	Global Y	0.1040		0.0000	1.0000
721	Uniform Force	Global Y	0.1040		0.0000	1.0000
722	Uniform Force	Global Y	0.1040		0.0000	1.0000
723	Uniform Force	Global Y	0.1040		0.0000	1.0000
724	Uniform Force	Global Y	0.1040		0.0000	1.0000
725	Uniform Force	Global Y	0.1040		0.0000	1.0000

LOAD CASE WS 30 deg, Member Loads

Member	Type	Direction	Magnitude at Start (kips or kips-ft)	Magnitude at End (kips or kips-ft)	Start Position (x/L)	End Position from start (x/L)
726	Uniform Force	Global Y	0.1040		0.0000	1.0000
727	Uniform Force	Global Y	0.1040		0.0000	1.0000
728	Uniform Force	Global Y	0.1040		0.0000	1.0000
729	Uniform Force	Global Y	0.1040		0.0000	1.0000
730	Uniform Force	Global Y	0.1040		0.0000	1.0000
731	Uniform Force	Global Y	0.1040		0.0000	1.0000
732	Uniform Force	Global Y	0.1040		0.0000	1.0000
733	Uniform Force	Global Y	0.1040		0.0000	1.0000
740	Uniform Force	Global Y	0.1040		0.0000	1.0000
741	Uniform Force	Global Y	0.1040		0.0000	1.0000
742	Uniform Force	Global Y	0.1040		0.0000	1.0000
743	Uniform Force	Global Y	0.1040		0.0000	1.0000
744	Uniform Force	Global Y	0.1040		0.0000	1.0000
745	Uniform Force	Global Y	0.1040		0.0000	1.0000
746	Uniform Force	Global Y	0.1040		0.0000	1.0000
747	Uniform Force	Global Y	0.1040		0.0000	1.0000
748	Uniform Force	Global Y	0.1040		0.0000	1.0000
749	Uniform Force	Global Y	0.1040		0.0000	1.0000
750	Uniform Force	Global Y	0.1040		0.0000	1.0000
751	Uniform Force	Global Y	0.1040		0.0000	1.0000
752	Uniform Force	Global Y	0.1040		0.0000	1.0000
753	Uniform Force	Global Y	0.1040		0.0000	1.0000
754	Uniform Force	Global Y	0.1040		0.0000	1.0000
755	Uniform Force	Global Y	0.1040		0.0000	1.0000
756	Uniform Force	Global Y	0.1040		0.0000	1.0000
757	Uniform Force	Global Y	0.1040		0.0000	1.0000
758	Uniform Force	Global Y	0.1040		0.0000	1.0000
759	Uniform Force	Global Y	0.1040		0.0000	1.0000
760	Uniform Force	Global Y	0.1040		0.0000	1.0000
761	Uniform Force	Global Y	0.1040		0.0000	1.0000
762	Uniform Force	Global Y	0.1040		0.0000	1.0000
763	Uniform Force	Global Y	0.1040		0.0000	1.0000
764	Uniform Force	Global Y	0.1040		0.0000	1.0000
765	Uniform Force	Global Y	0.1040		0.0000	1.0000

LOAD CASE WS 30 deg, Member Loads

Member	Type	Direction	Magnitude at Start (kips or kips-ft)	Magnitude at End (kips or kips-ft)	Start Position (x/L)	End Position from start (x/L)
766	Uniform Force	Global Y	0.1040		0.0000	1.0000
767	Uniform Force	Global Y	0.1040		0.0000	1.0000
768	Uniform Force	Global Y	0.1040		0.0000	1.0000
769	Uniform Force	Global Y	0.1040		0.0000	1.0000
770	Uniform Force	Global Y	0.1040		0.0000	1.0000
771	Uniform Force	Global Y	0.1040		0.0000	1.0000
772	Uniform Force	Global Y	0.1040		0.0000	1.0000
1	Uniform Moment	Local x	-0.8400		0.0000	1.0000
2	Uniform Moment	Local x	-0.8400		0.0000	1.0000
3	Uniform Moment	Local x	-0.8400		0.0000	1.0000
4	Uniform Moment	Local x	-0.8400		0.0000	1.0000
5	Uniform Moment	Local x	-0.8400		0.0000	1.0000
6	Uniform Moment	Local x	-0.8400		0.0000	1.0000
7	Uniform Moment	Local x	-0.8400		0.0000	1.0000
8	Uniform Moment	Local x	-0.8400		0.0000	1.0000
9	Uniform Moment	Local x	-0.8400		0.0000	1.0000
10	Uniform Moment	Local x	-0.8400		0.0000	1.0000
11	Uniform Moment	Local x	-0.8400		0.0000	1.0000
12	Uniform Moment	Local x	-0.8400		0.0000	1.0000
13	Uniform Moment	Local x	-0.8400		0.0000	1.0000
14	Uniform Moment	Local x	-0.8400		0.0000	1.0000
15	Uniform Moment	Local x	-0.8400		0.0000	1.0000
16	Uniform Moment	Local x	-0.8400		0.0000	1.0000
17	Uniform Moment	Local x	-0.8400		0.0000	1.0000
18	Uniform Moment	Local x	-0.8400		0.0000	1.0000
19	Uniform Moment	Local x	-0.8400		0.0000	1.0000
20	Uniform Moment	Local x	-0.8400		0.0000	1.0000
21	Uniform Moment	Local x	-0.8400		0.0000	1.0000
22	Uniform Moment	Local x	-0.8400		0.0000	1.0000
23	Uniform Moment	Local x	-0.8400		0.0000	1.0000
24	Uniform Moment	Local x	-0.8400		0.0000	1.0000
25	Uniform Moment	Local x	-0.8400		0.0000	1.0000
26	Uniform Moment	Local x	-0.8400		0.0000	1.0000
27	Uniform Moment	Local x	-0.8400		0.0000	1.0000

LOAD CASE WS 30 deg, Member Loads

Member	Type	Direction	Magnitude at Start (kips or kips-ft)	Magnitude at End (kips or kips-ft)	Start Position (x/L)	End Position from start (x/L)
28	Uniform Moment	Local x	-0.8400		0.0000	1.0000
29	Uniform Moment	Local x	-0.8400		0.0000	1.0000
30	Uniform Moment	Local x	-0.8400		0.0000	1.0000
31	Uniform Moment	Local x	-0.8400		0.0000	1.0000
32	Uniform Moment	Local x	-0.8400		0.0000	1.0000
33	Uniform Moment	Local x	-0.8400		0.0000	1.0000
34	Uniform Moment	Local x	-0.8400		0.0000	1.0000
35	Uniform Moment	Local x	-0.8400		0.0000	1.0000
36	Uniform Moment	Local x	-0.8400		0.0000	1.0000
37	Uniform Moment	Local x	-0.8400		0.0000	1.0000
38	Uniform Moment	Local x	-0.8400		0.0000	1.0000
39	Uniform Moment	Local x	-0.8400		0.0000	1.0000
40	Uniform Moment	Local x	-0.8400		0.0000	1.0000
41	Uniform Moment	Local x	-0.8400		0.0000	1.0000
42	Uniform Moment	Local x	-0.8400		0.0000	1.0000
43	Uniform Moment	Local x	-0.8400		0.0000	1.0000
44	Uniform Moment	Local x	-0.8400		0.0000	1.0000
45	Uniform Moment	Local x	-0.8400		0.0000	1.0000
46	Uniform Moment	Local x	-0.8400		0.0000	1.0000
47	Uniform Moment	Local x	-0.8400		0.0000	1.0000
48	Uniform Moment	Local x	-0.8400		0.0000	1.0000
49	Uniform Moment	Local x	-0.8400		0.0000	1.0000
50	Uniform Moment	Local x	-0.8400		0.0000	1.0000
51	Uniform Moment	Local x	-0.8400		0.0000	1.0000
52	Uniform Moment	Local x	-0.8400		0.0000	1.0000
53	Uniform Moment	Local x	-0.8400		0.0000	1.0000
54	Uniform Moment	Local x	-0.8400		0.0000	1.0000
55	Uniform Moment	Local x	-0.8400		0.0000	1.0000
56	Uniform Moment	Local x	-0.8400		0.0000	1.0000
57	Uniform Moment	Local x	-0.8400		0.0000	1.0000
1	Uniform Force	Local x	0.1400		0.0000	1.0000
2	Uniform Force	Local x	0.1400		0.0000	1.0000
3	Uniform Force	Local x	0.1400		0.0000	1.0000
4	Uniform Force	Local x	0.1400		0.0000	1.0000

LOAD CASE WS 30 deg, Member Loads

Member	Type	Direction	Magnitude at Start (kips or kips-ft)	Magnitude at End (kips or kips-ft)	Start Position (x/L)	End Position from start (x/L)
5	Uniform Force	Local x	0.1400		0.0000	1.0000
6	Uniform Force	Local x	0.1400		0.0000	1.0000
7	Uniform Force	Local x	0.1400		0.0000	1.0000
8	Uniform Force	Local x	0.1400		0.0000	1.0000
9	Uniform Force	Local x	0.1400		0.0000	1.0000
10	Uniform Force	Local x	0.1400		0.0000	1.0000
11	Uniform Force	Local x	0.1400		0.0000	1.0000
12	Uniform Force	Local x	0.1400		0.0000	1.0000
13	Uniform Force	Local x	0.1400		0.0000	1.0000
14	Uniform Force	Local x	0.1400		0.0000	1.0000
15	Uniform Force	Local x	0.1400		0.0000	1.0000
16	Uniform Force	Local x	0.1400		0.0000	1.0000
17	Uniform Force	Local x	0.1400		0.0000	1.0000
18	Uniform Force	Local x	0.1400		0.0000	1.0000
19	Uniform Force	Local x	0.1400		0.0000	1.0000
20	Uniform Force	Local x	0.1400		0.0000	1.0000
21	Uniform Force	Local x	0.1400		0.0000	1.0000
22	Uniform Force	Local x	0.1400		0.0000	1.0000
23	Uniform Force	Local x	0.1400		0.0000	1.0000
24	Uniform Force	Local x	0.1400		0.0000	1.0000
25	Uniform Force	Local x	0.1400		0.0000	1.0000
26	Uniform Force	Local x	0.1400		0.0000	1.0000
27	Uniform Force	Local x	0.1400		0.0000	1.0000
28	Uniform Force	Local x	0.1400		0.0000	1.0000
29	Uniform Force	Local x	0.1400		0.0000	1.0000
30	Uniform Force	Local x	0.1400		0.0000	1.0000
31	Uniform Force	Local x	0.1400		0.0000	1.0000
32	Uniform Force	Local x	0.1400		0.0000	1.0000
33	Uniform Force	Local x	0.1400		0.0000	1.0000
34	Uniform Force	Local x	0.1400		0.0000	1.0000
35	Uniform Force	Local x	0.1400		0.0000	1.0000
36	Uniform Force	Local x	0.1400		0.0000	1.0000
37	Uniform Force	Local x	0.1400		0.0000	1.0000
38	Uniform Force	Local x	0.1400		0.0000	1.0000

LOAD CASE WS 30 deg, Member Loads

Member	Type	Direction	Magnitude at Start (kips or kips-ft)	Magnitude at End (kips or kips-ft)	Start Position (x/L)	End Position from start (x/L)
39	Uniform Force	Local x	0.1400		0.0000	1.0000
40	Uniform Force	Local x	0.1400		0.0000	1.0000
41	Uniform Force	Local x	0.1400		0.0000	1.0000
42	Uniform Force	Local x	0.1400		0.0000	1.0000
43	Uniform Force	Local x	0.1400		0.0000	1.0000
44	Uniform Force	Local x	0.1400		0.0000	1.0000
45	Uniform Force	Local x	0.1400		0.0000	1.0000
46	Uniform Force	Local x	0.1400		0.0000	1.0000
47	Uniform Force	Local x	0.1400		0.0000	1.0000
48	Uniform Force	Local x	0.1400		0.0000	1.0000
49	Uniform Force	Local x	0.1400		0.0000	1.0000
50	Uniform Force	Local x	0.1400		0.0000	1.0000
51	Uniform Force	Local x	0.1400		0.0000	1.0000
52	Uniform Force	Local x	0.1400		0.0000	1.0000
53	Uniform Force	Local x	0.1400		0.0000	1.0000
54	Uniform Force	Local x	0.1400		0.0000	1.0000
55	Uniform Force	Local x	0.1400		0.0000	1.0000
56	Uniform Force	Local x	0.1400		0.0000	1.0000
57	Uniform Force	Local x	0.1400		0.0000	1.0000
101	Uniform Force	Local x	0.0480		0.0000	1.0000
102	Uniform Force	Local x	0.0480		0.0000	1.0000
103	Uniform Force	Local x	0.0480		0.0000	1.0000
104	Uniform Force	Local x	0.0480		0.0000	1.0000
105	Uniform Force	Local x	0.0480		0.0000	1.0000
106	Uniform Force	Local x	0.0480		0.0000	1.0000
107	Uniform Force	Local x	0.0480		0.0000	1.0000
108	Uniform Force	Local x	0.0480		0.0000	1.0000
109	Uniform Force	Local x	0.0480		0.0000	1.0000
110	Uniform Force	Local x	0.0480		0.0000	1.0000
111	Uniform Force	Local x	0.0480		0.0000	1.0000
112	Uniform Force	Local x	0.0480		0.0000	1.0000
113	Uniform Force	Local x	0.0480		0.0000	1.0000
114	Uniform Force	Local x	0.0480		0.0000	1.0000
115	Uniform Force	Local x	0.0480		0.0000	1.0000

LOAD CASE WS 30 deg, Member Loads

Member	Type	Direction	Magnitude at Start (kips or kips-ft)	Magnitude at End (kips or kips-ft)	Start Position (x/L)	End Position from start (x/L)
116	Uniform Force	Local x	0.0480		0.0000	1.0000
117	Uniform Force	Local x	0.0480		0.0000	1.0000
118	Uniform Force	Local x	0.0480		0.0000	1.0000
119	Uniform Force	Local x	0.0480		0.0000	1.0000
120	Uniform Force	Local x	0.0480		0.0000	1.0000
121	Uniform Force	Local x	0.0480		0.0000	1.0000
122	Uniform Force	Local x	0.0480		0.0000	1.0000
123	Uniform Force	Local x	0.0480		0.0000	1.0000
124	Uniform Force	Local x	0.0480		0.0000	1.0000
125	Uniform Force	Local x	0.0480		0.0000	1.0000
126	Uniform Force	Local x	0.0480		0.0000	1.0000
127	Uniform Force	Local x	0.0480		0.0000	1.0000
128	Uniform Force	Local x	0.0480		0.0000	1.0000
129	Uniform Force	Local x	0.0480		0.0000	1.0000
130	Uniform Force	Local x	0.0480		0.0000	1.0000
131	Uniform Force	Local x	0.0480		0.0000	1.0000
132	Uniform Force	Local x	0.0480		0.0000	1.0000
133	Uniform Force	Local x	0.0480		0.0000	1.0000
134	Uniform Force	Local x	0.0480		0.0000	1.0000
135	Uniform Force	Local x	0.0480		0.0000	1.0000
136	Uniform Force	Local x	0.0480		0.0000	1.0000
137	Uniform Force	Local x	0.0480		0.0000	1.0000
138	Uniform Force	Local x	0.0480		0.0000	1.0000
139	Uniform Force	Local x	0.0480		0.0000	1.0000
140	Uniform Force	Local x	0.0480		0.0000	1.0000
141	Uniform Force	Local x	0.0480		0.0000	1.0000
142	Uniform Force	Local x	0.0480		0.0000	1.0000
143	Uniform Force	Local x	0.0480		0.0000	1.0000
144	Uniform Force	Local x	0.0480		0.0000	1.0000
145	Uniform Force	Local x	0.0480		0.0000	1.0000
146	Uniform Force	Local x	0.0480		0.0000	1.0000
147	Uniform Force	Local x	0.0480		0.0000	1.0000
148	Uniform Force	Local x	0.0480		0.0000	1.0000
149	Uniform Force	Local x	0.0480		0.0000	1.0000

LOAD CASE WS 30 deg, Member Loads

Member	Type	Direction	Magnitude at Start (kips or kips-ft)	Magnitude at End (kips or kips-ft)	Start Position (x/L)	End Position from start (x/L)
150	Uniform Force	Local x	0.0480		0.0000	1.0000
151	Uniform Force	Local x	0.0480		0.0000	1.0000
152	Uniform Force	Local x	0.0480		0.0000	1.0000
153	Uniform Force	Local x	0.0480		0.0000	1.0000
154	Uniform Force	Local x	0.0480		0.0000	1.0000
155	Uniform Force	Local x	0.0480		0.0000	1.0000
156	Uniform Force	Local x	0.0480		0.0000	1.0000
157	Uniform Force	Local x	0.0480		0.0000	1.0000
158	Uniform Force	Local x	0.0480		0.0000	1.0000
159	Uniform Force	Local x	0.0480		0.0000	1.0000
160	Uniform Force	Local x	0.0480		0.0000	1.0000
701	Uniform Force	Global X	0.0440		0.0000	1.0000
702	Uniform Force	Global X	0.0440		0.0000	1.0000
703	Uniform Force	Global X	0.0440		0.0000	1.0000
704	Uniform Force	Global X	0.0440		0.0000	1.0000
705	Uniform Force	Global X	0.0440		0.0000	1.0000
706	Uniform Force	Global X	0.0440		0.0000	1.0000
707	Uniform Force	Global X	0.0440		0.0000	1.0000
708	Uniform Force	Global X	0.0440		0.0000	1.0000
709	Uniform Force	Global X	0.0440		0.0000	1.0000
710	Uniform Force	Global X	0.0440		0.0000	1.0000
711	Uniform Force	Global X	0.0440		0.0000	1.0000
712	Uniform Force	Global X	0.0440		0.0000	1.0000
713	Uniform Force	Global X	0.0440		0.0000	1.0000
714	Uniform Force	Global X	0.0440		0.0000	1.0000
715	Uniform Force	Global X	0.0440		0.0000	1.0000
716	Uniform Force	Global X	0.0440		0.0000	1.0000
717	Uniform Force	Global X	0.0440		0.0000	1.0000
718	Uniform Force	Global X	0.0440		0.0000	1.0000
719	Uniform Force	Global X	0.0440		0.0000	1.0000
720	Uniform Force	Global X	0.0440		0.0000	1.0000
721	Uniform Force	Global X	0.0440		0.0000	1.0000
722	Uniform Force	Global X	0.0440		0.0000	1.0000
723	Uniform Force	Global X	0.0440		0.0000	1.0000

LOAD CASE WS 30 deg, Member Loads

Member	Type	Direction	Magnitude at Start (kips or kips-ft)	Magnitude at End (kips or kips-ft)	Start Position (x/L)	End Position from start (x/L)
724	Uniform Force	Global X	0.0440		0.0000	1.0000
725	Uniform Force	Global X	0.0440		0.0000	1.0000
726	Uniform Force	Global X	0.0440		0.0000	1.0000
727	Uniform Force	Global X	0.0440		0.0000	1.0000
728	Uniform Force	Global X	0.0440		0.0000	1.0000
729	Uniform Force	Global X	0.0440		0.0000	1.0000
730	Uniform Force	Global X	0.0440		0.0000	1.0000
731	Uniform Force	Global X	0.0440		0.0000	1.0000
732	Uniform Force	Global X	0.0440		0.0000	1.0000
733	Uniform Force	Global X	0.0440		0.0000	1.0000
740	Uniform Force	Global X	0.0440		0.0000	1.0000
741	Uniform Force	Global X	0.0440		0.0000	1.0000
742	Uniform Force	Global X	0.0440		0.0000	1.0000
743	Uniform Force	Global X	0.0440		0.0000	1.0000
744	Uniform Force	Global X	0.0440		0.0000	1.0000
745	Uniform Force	Global X	0.0440		0.0000	1.0000
746	Uniform Force	Global X	0.0440		0.0000	1.0000
747	Uniform Force	Global X	0.0440		0.0000	1.0000
748	Uniform Force	Global X	0.0440		0.0000	1.0000
749	Uniform Force	Global X	0.0440		0.0000	1.0000
750	Uniform Force	Global X	0.0440		0.0000	1.0000
751	Uniform Force	Global X	0.0440		0.0000	1.0000
752	Uniform Force	Global X	0.0440		0.0000	1.0000
753	Uniform Force	Global X	0.0440		0.0000	1.0000
754	Uniform Force	Global X	0.0440		0.0000	1.0000
755	Uniform Force	Global X	0.0440		0.0000	1.0000
756	Uniform Force	Global X	0.0440		0.0000	1.0000
757	Uniform Force	Global X	0.0440		0.0000	1.0000
758	Uniform Force	Global X	0.0440		0.0000	1.0000
759	Uniform Force	Global X	0.0440		0.0000	1.0000
760	Uniform Force	Global X	0.0440		0.0000	1.0000
761	Uniform Force	Global X	0.0440		0.0000	1.0000
762	Uniform Force	Global X	0.0440		0.0000	1.0000
763	Uniform Force	Global X	0.0440		0.0000	1.0000

LOAD CASE WS 30 deg, Member Loads

Member	Type	Direction	Magnitude at Start (kips or kips-ft)	Magnitude at End (kips or kips-ft)	Start Position (x/L)	End Position from start (x/L)
764	Uniform Force	Global X	0.0440		0.0000	1.0000
765	Uniform Force	Global X	0.0440		0.0000	1.0000
766	Uniform Force	Global X	0.0440		0.0000	1.0000
767	Uniform Force	Global X	0.0440		0.0000	1.0000
768	Uniform Force	Global X	0.0440		0.0000	1.0000
769	Uniform Force	Global X	0.0440		0.0000	1.0000
770	Uniform Force	Global X	0.0440		0.0000	1.0000
771	Uniform Force	Global X	0.0440		0.0000	1.0000
772	Uniform Force	Global X	0.0440		0.0000	1.0000
2002	Uniform Force	Global Y	0.3500		0.0000	1.0000
2003	Uniform Force	Global Y	0.3500		0.0000	1.0000
2002	Trapezoidal Force	Global X	0.6200	0.4800	0.0000	1.0000
2003	Trapezoidal Force	Global X	0.4800	0.3400	0.0000	1.0000
1017	Uniform Force	Global Y	0.2900		0.0000	1.0000
1018	Uniform Force	Global Y	0.2900		0.0000	1.0000
1019	Uniform Force	Global Y	0.2900		0.0000	1.0000
1017	Uniform Force	Global X	0.0680		0.0000	1.0000
1018	Uniform Force	Global X	0.0680		0.0000	1.0000
1019	Uniform Force	Global X	0.0680		0.0000	1.0000
1013	Uniform Force	Global Y	0.2900		0.0000	1.0000
1014	Uniform Force	Global Y	0.2900		0.0000	1.0000
1015	Uniform Force	Global Y	0.2900		0.0000	1.0000
1013	Uniform Force	Global X	0.0680		0.0000	1.0000
1014	Uniform Force	Global X	0.0680		0.0000	1.0000
1015	Uniform Force	Global X	0.0680		0.0000	1.0000
3017	Uniform Force	Global Y	0.2900		0.0000	1.0000
3018	Uniform Force	Global Y	0.2900		0.0000	1.0000
3019	Uniform Force	Global Y	0.2900		0.0000	1.0000
3017	Uniform Force	Global X	0.0680		0.0000	1.0000
3018	Uniform Force	Global X	0.0680		0.0000	1.0000
3019	Uniform Force	Global X	0.0680		0.0000	1.0000
3013	Uniform Force	Global Y	0.2900		0.0000	1.0000
3014	Uniform Force	Global Y	0.2900		0.0000	1.0000
3015	Uniform Force	Global Y	0.2900		0.0000	1.0000

LOAD CASE WS 30 deg, Member Loads

Member	Type	Direction	Magnitude at Start (kips or kips-ft)	Magnitude at End (kips or kips-ft)	Start Position (x/L)	End Position from start (x/L)
3013	Uniform Force	Global X	0.0680		0.0000	1.0000
3014	Uniform Force	Global X	0.0680		0.0000	1.0000
3015	Uniform Force	Global X	0.0680		0.0000	1.0000
1006	Uniform Force	Global X	0.1700		0.0000	1.0000
1007	Uniform Force	Global X	0.1700		0.0000	1.0000
1008	Uniform Force	Global X	0.1700		0.0000	1.0000
1009	Uniform Force	Global X	0.1700		0.0000	1.0000
1010	Uniform Force	Global X	0.1700		0.0000	1.0000
1011	Uniform Force	Global X	0.1700		0.0000	1.0000
1012	Uniform Force	Global X	0.1700		0.0000	1.0000
3006	Uniform Force	Global X	0.1700		0.0000	1.0000
3007	Uniform Force	Global X	0.1700		0.0000	1.0000
3008	Uniform Force	Global X	0.1700		0.0000	1.0000
3009	Uniform Force	Global X	0.1700		0.0000	1.0000
3010	Uniform Force	Global X	0.1700		0.0000	1.0000
3011	Uniform Force	Global X	0.1700		0.0000	1.0000
3012	Uniform Force	Global X	0.1700		0.0000	1.0000
501	Uniform Force	Global Y	0.0840		0.0000	1.0000
502	Uniform Force	Global Y	0.0840		0.0000	1.0000
503	Uniform Force	Global Y	0.0840		0.0000	1.0000
504	Uniform Force	Global Y	0.0840		0.0000	1.0000
505	Uniform Force	Global Y	0.0840		0.0000	1.0000
601	Uniform Force	Global Y	0.0840		0.0000	1.0000
602	Uniform Force	Global Y	0.0840		0.0000	1.0000
603	Uniform Force	Global Y	0.0840		0.0000	1.0000
604	Uniform Force	Global Y	0.0840		0.0000	1.0000
605	Uniform Force	Global Y	0.0840		0.0000	1.0000
401	Uniform Force	Global Y	0.3500		0.0000	1.0000
402	Uniform Force	Global Y	0.3500		0.0000	1.0000
403	Uniform Force	Global Y	0.3500		0.0000	1.0000
405	Trapezoidal Force	Global Y	0.4400	0.4200	0.0000	1.0000
406	Trapezoidal Force	Global Y	0.4200	0.4000	0.0000	1.0000
407	Trapezoidal Force	Global Y	0.4000	0.3900	0.0000	1.0000
408	Trapezoidal Force	Global Y	0.3900	0.3500	0.0000	1.0000

LOAD CASE WS 30 deg, Member Loads

Member	Type	Direction	Magnitude at Start (kips or kips-ft)	Magnitude at End (kips or kips-ft)	Start Position (x/L)	End Position from start (x/L)
409	Trapezoidal Force	Global Y	0.3500	0.3400	0.0000	1.0000
410	Trapezoidal Force	Global Y	0.3400	0.3200	0.0000	1.0000
411	Trapezoidal Force	Global Y	0.3200	0.3100	0.0000	1.0000
412	Trapezoidal Force	Global Y	0.3100	0.2900	0.0000	1.0000
413	Trapezoidal Force	Global Y	0.2900	0.2800	0.0000	1.0000
501	Uniform Force	Global X	0.0480		0.0000	1.0000
502	Uniform Force	Global X	0.0480		0.0000	1.0000
503	Uniform Force	Global X	0.0480		0.0000	1.0000
504	Uniform Force	Global X	0.0480		0.0000	1.0000
505	Uniform Force	Global X	0.0480		0.0000	1.0000
601	Uniform Force	Global X	0.0480		0.0000	1.0000
602	Uniform Force	Global X	0.0480		0.0000	1.0000
603	Uniform Force	Global X	0.0480		0.0000	1.0000
604	Uniform Force	Global X	0.0480		0.0000	1.0000
605	Uniform Force	Global X	0.0480		0.0000	1.0000
401	Uniform Force	Global X	0.1700		0.0000	1.0000
402	Uniform Force	Global X	0.1700		0.0000	1.0000
403	Uniform Force	Global X	0.1700		0.0000	1.0000
405	Trapezoidal Force	Global X	0.2500	0.2400	0.0000	1.0000
406	Trapezoidal Force	Global X	0.2400	0.2300	0.0000	1.0000
407	Trapezoidal Force	Global X	0.2300	0.2200	0.0000	1.0000
408	Trapezoidal Force	Global X	0.2200	0.2000	0.0000	1.0000
409	Trapezoidal Force	Global X	0.2000	0.2000	0.0000	1.0000
410	Trapezoidal Force	Global X	0.2000	0.1900	0.0000	1.0000
411	Trapezoidal Force	Global X	0.1900	0.1800	0.0000	1.0000
412	Trapezoidal Force	Global X	0.1800	0.1700	0.0000	1.0000
413	Trapezoidal Force	Global X	0.1700	0.1600	0.0000	1.0000

LOAD CASE WS_15 deg, Member Loads

Member	Type	Direction	Magnitude at Start (kips or kips-ft)	Magnitude at End (kips or kips-ft)	Start Position (x/L)	End Position from start (x/L)
1	Uniform Force	Global Y	0.3570		0.0000	1.0000
2	Uniform Force	Global Y	0.3570		0.0000	1.0000

LOAD CASE WS 15 deg, Member Loads

Member	Type	Direction	Magnitude at Start (kips or kips-ft)	Magnitude at End (kips or kips-ft)	Start Position (x/L)	End Position from start (x/L)
3	Uniform Force	Global Y	0.3570		0.0000	1.0000
4	Uniform Force	Global Y	0.3570		0.0000	1.0000
5	Uniform Force	Global Y	0.3570		0.0000	1.0000
6	Uniform Force	Global Y	0.3570		0.0000	1.0000
7	Uniform Force	Global Y	0.3570		0.0000	1.0000
8	Uniform Force	Global Y	0.3570		0.0000	1.0000
9	Uniform Force	Global Y	0.3570		0.0000	1.0000
10	Uniform Force	Global Y	0.3570		0.0000	1.0000
11	Uniform Force	Global Y	0.3570		0.0000	1.0000
12	Uniform Force	Global Y	0.3570		0.0000	1.0000
13	Uniform Force	Global Y	0.3570		0.0000	1.0000
14	Uniform Force	Global Y	0.3570		0.0000	1.0000
15	Uniform Force	Global Y	0.3570		0.0000	1.0000
16	Uniform Force	Global Y	0.3570		0.0000	1.0000
17	Uniform Force	Global Y	0.3570		0.0000	1.0000
18	Uniform Force	Global Y	0.3570		0.0000	1.0000
19	Uniform Force	Global Y	0.3570		0.0000	1.0000
20	Uniform Force	Global Y	0.3570		0.0000	1.0000
21	Uniform Force	Global Y	0.3570		0.0000	1.0000
22	Uniform Force	Global Y	0.3570		0.0000	1.0000
23	Uniform Force	Global Y	0.3570		0.0000	1.0000
24	Uniform Force	Global Y	0.3570		0.0000	1.0000
25	Uniform Force	Global Y	0.3570		0.0000	1.0000
26	Uniform Force	Global Y	0.3570		0.0000	1.0000
27	Uniform Force	Global Y	0.3570		0.0000	1.0000
28	Uniform Force	Global Y	0.3570		0.0000	1.0000
29	Uniform Force	Global Y	0.3570		0.0000	1.0000
30	Uniform Force	Global Y	0.3570		0.0000	1.0000
31	Uniform Force	Global Y	0.3570		0.0000	1.0000
32	Uniform Force	Global Y	0.3570		0.0000	1.0000
33	Uniform Force	Global Y	0.3570		0.0000	1.0000
34	Uniform Force	Global Y	0.3570		0.0000	1.0000
35	Uniform Force	Global Y	0.3570		0.0000	1.0000
36	Uniform Force	Global Y	0.3570		0.0000	1.0000

LOAD CASE WS 15 deg, Member Loads

Member	Type	Direction	Magnitude at Start (kips or kips-ft)	Magnitude at End (kips or kips-ft)	Start Position (x/L)	End Position from start (x/L)
37	Uniform Force	Global Y	0.3570		0.0000	1.0000
38	Uniform Force	Global Y	0.3570		0.0000	1.0000
39	Uniform Force	Global Y	0.3570		0.0000	1.0000
40	Uniform Force	Global Y	0.3570		0.0000	1.0000
41	Uniform Force	Global Y	0.3570		0.0000	1.0000
42	Uniform Force	Global Y	0.3570		0.0000	1.0000
43	Uniform Force	Global Y	0.3570		0.0000	1.0000
44	Uniform Force	Global Y	0.3570		0.0000	1.0000
45	Uniform Force	Global Y	0.3570		0.0000	1.0000
46	Uniform Force	Global Y	0.3570		0.0000	1.0000
47	Uniform Force	Global Y	0.3570		0.0000	1.0000
48	Uniform Force	Global Y	0.3570		0.0000	1.0000
49	Uniform Force	Global Y	0.3570		0.0000	1.0000
50	Uniform Force	Global Y	0.3570		0.0000	1.0000
51	Uniform Force	Global Y	0.3570		0.0000	1.0000
52	Uniform Force	Global Y	0.3570		0.0000	1.0000
53	Uniform Force	Global Y	0.3570		0.0000	1.0000
54	Uniform Force	Global Y	0.3570		0.0000	1.0000
55	Uniform Force	Global Y	0.3570		0.0000	1.0000
56	Uniform Force	Global Y	0.3570		0.0000	1.0000
57	Uniform Force	Global Y	0.3570		0.0000	1.0000
101	Uniform Force	Global Y	0.1220		0.0000	1.0000
102	Uniform Force	Global Y	0.1220		0.0000	1.0000
103	Uniform Force	Global Y	0.1220		0.0000	1.0000
104	Uniform Force	Global Y	0.1220		0.0000	1.0000
105	Uniform Force	Global Y	0.1220		0.0000	1.0000
106	Uniform Force	Global Y	0.1220		0.0000	1.0000
107	Uniform Force	Global Y	0.1220		0.0000	1.0000
108	Uniform Force	Global Y	0.1220		0.0000	1.0000
109	Uniform Force	Global Y	0.1220		0.0000	1.0000
110	Uniform Force	Global Y	0.1220		0.0000	1.0000
111	Uniform Force	Global Y	0.1220		0.0000	1.0000
112	Uniform Force	Global Y	0.1220		0.0000	1.0000
113	Uniform Force	Global Y	0.1220		0.0000	1.0000

LOAD CASE WS 15 deg, Member Loads

Member	Type	Direction	Magnitude at Start (kips or kips-ft)	Magnitude at End (kips or kips-ft)	Start Position (x/L)	End Position from start (x/L)
114	Uniform Force	Global Y	0.1220		0.0000	1.0000
115	Uniform Force	Global Y	0.1220		0.0000	1.0000
116	Uniform Force	Global Y	0.1220		0.0000	1.0000
117	Uniform Force	Global Y	0.1220		0.0000	1.0000
118	Uniform Force	Global Y	0.1220		0.0000	1.0000
119	Uniform Force	Global Y	0.1220		0.0000	1.0000
120	Uniform Force	Global Y	0.1220		0.0000	1.0000
121	Uniform Force	Global Y	0.1220		0.0000	1.0000
122	Uniform Force	Global Y	0.1220		0.0000	1.0000
123	Uniform Force	Global Y	0.1220		0.0000	1.0000
124	Uniform Force	Global Y	0.1220		0.0000	1.0000
125	Uniform Force	Global Y	0.1220		0.0000	1.0000
126	Uniform Force	Global Y	0.1220		0.0000	1.0000
127	Uniform Force	Global Y	0.1220		0.0000	1.0000
128	Uniform Force	Global Y	0.1220		0.0000	1.0000
129	Uniform Force	Global Y	0.1220		0.0000	1.0000
130	Uniform Force	Global Y	0.1220		0.0000	1.0000
131	Uniform Force	Global Y	0.1220		0.0000	1.0000
132	Uniform Force	Global Y	0.1220		0.0000	1.0000
133	Uniform Force	Global Y	0.1220		0.0000	1.0000
134	Uniform Force	Global Y	0.1220		0.0000	1.0000
135	Uniform Force	Global Y	0.1220		0.0000	1.0000
136	Uniform Force	Global Y	0.1220		0.0000	1.0000
137	Uniform Force	Global Y	0.1220		0.0000	1.0000
138	Uniform Force	Global Y	0.1220		0.0000	1.0000
139	Uniform Force	Global Y	0.1220		0.0000	1.0000
140	Uniform Force	Global Y	0.1220		0.0000	1.0000
141	Uniform Force	Global Y	0.1220		0.0000	1.0000
142	Uniform Force	Global Y	0.1220		0.0000	1.0000
143	Uniform Force	Global Y	0.1220		0.0000	1.0000
144	Uniform Force	Global Y	0.1220		0.0000	1.0000
145	Uniform Force	Global Y	0.1220		0.0000	1.0000
146	Uniform Force	Global Y	0.1220		0.0000	1.0000
147	Uniform Force	Global Y	0.1220		0.0000	1.0000

LOAD CASE WS 15 deg, Member Loads

Member	Type	Direction	Magnitude at Start (kips or kips-ft)	Magnitude at End (kips or kips-ft)	Start Position (x/L)	End Position from start (x/L)
148	Uniform Force	Global Y	0.1220		0.0000	1.0000
149	Uniform Force	Global Y	0.1220		0.0000	1.0000
150	Uniform Force	Global Y	0.1220		0.0000	1.0000
151	Uniform Force	Global Y	0.1220		0.0000	1.0000
152	Uniform Force	Global Y	0.1220		0.0000	1.0000
153	Uniform Force	Global Y	0.1220		0.0000	1.0000
154	Uniform Force	Global Y	0.1220		0.0000	1.0000
155	Uniform Force	Global Y	0.1220		0.0000	1.0000
156	Uniform Force	Global Y	0.1220		0.0000	1.0000
157	Uniform Force	Global Y	0.1220		0.0000	1.0000
158	Uniform Force	Global Y	0.1220		0.0000	1.0000
159	Uniform Force	Global Y	0.1220		0.0000	1.0000
160	Uniform Force	Global Y	0.1220		0.0000	1.0000
701	Uniform Force	Global Y	0.1130		0.0000	1.0000
702	Uniform Force	Global Y	0.1130		0.0000	1.0000
703	Uniform Force	Global Y	0.1130		0.0000	1.0000
704	Uniform Force	Global Y	0.1130		0.0000	1.0000
705	Uniform Force	Global Y	0.1130		0.0000	1.0000
706	Uniform Force	Global Y	0.1130		0.0000	1.0000
707	Uniform Force	Global Y	0.1130		0.0000	1.0000
708	Uniform Force	Global Y	0.1130		0.0000	1.0000
709	Uniform Force	Global Y	0.1130		0.0000	1.0000
710	Uniform Force	Global Y	0.1130		0.0000	1.0000
711	Uniform Force	Global Y	0.1130		0.0000	1.0000
712	Uniform Force	Global Y	0.1130		0.0000	1.0000
713	Uniform Force	Global Y	0.1130		0.0000	1.0000
714	Uniform Force	Global Y	0.1130		0.0000	1.0000
715	Uniform Force	Global Y	0.1130		0.0000	1.0000
716	Uniform Force	Global Y	0.1130		0.0000	1.0000
717	Uniform Force	Global Y	0.1130		0.0000	1.0000
718	Uniform Force	Global Y	0.1130		0.0000	1.0000
719	Uniform Force	Global Y	0.1130		0.0000	1.0000
720	Uniform Force	Global Y	0.1130		0.0000	1.0000
721	Uniform Force	Global Y	0.1130		0.0000	1.0000

LOAD CASE WS 15 deg, Member Loads

Member	Type	Direction	Magnitude at Start (kips or kips-ft)	Magnitude at End (kips or kips-ft)	Start Position (x/L)	End Position from start (x/L)
722	Uniform Force	Global Y	0.1130		0.0000	1.0000
723	Uniform Force	Global Y	0.1130		0.0000	1.0000
724	Uniform Force	Global Y	0.1130		0.0000	1.0000
725	Uniform Force	Global Y	0.1130		0.0000	1.0000
726	Uniform Force	Global Y	0.1130		0.0000	1.0000
727	Uniform Force	Global Y	0.1130		0.0000	1.0000
728	Uniform Force	Global Y	0.1130		0.0000	1.0000
729	Uniform Force	Global Y	0.1130		0.0000	1.0000
730	Uniform Force	Global Y	0.1130		0.0000	1.0000
731	Uniform Force	Global Y	0.1130		0.0000	1.0000
732	Uniform Force	Global Y	0.1130		0.0000	1.0000
733	Uniform Force	Global Y	0.1130		0.0000	1.0000
740	Uniform Force	Global Y	0.1130		0.0000	1.0000
741	Uniform Force	Global Y	0.1130		0.0000	1.0000
742	Uniform Force	Global Y	0.1130		0.0000	1.0000
743	Uniform Force	Global Y	0.1130		0.0000	1.0000
744	Uniform Force	Global Y	0.1130		0.0000	1.0000
745	Uniform Force	Global Y	0.1130		0.0000	1.0000
746	Uniform Force	Global Y	0.1130		0.0000	1.0000
747	Uniform Force	Global Y	0.1130		0.0000	1.0000
748	Uniform Force	Global Y	0.1130		0.0000	1.0000
749	Uniform Force	Global Y	0.1130		0.0000	1.0000
750	Uniform Force	Global Y	0.1130		0.0000	1.0000
751	Uniform Force	Global Y	0.1130		0.0000	1.0000
752	Uniform Force	Global Y	0.1130		0.0000	1.0000
753	Uniform Force	Global Y	0.1130		0.0000	1.0000
754	Uniform Force	Global Y	0.1130		0.0000	1.0000
755	Uniform Force	Global Y	0.1130		0.0000	1.0000
756	Uniform Force	Global Y	0.1130		0.0000	1.0000
757	Uniform Force	Global Y	0.1130		0.0000	1.0000
758	Uniform Force	Global Y	0.1130		0.0000	1.0000
759	Uniform Force	Global Y	0.1130		0.0000	1.0000
760	Uniform Force	Global Y	0.1130		0.0000	1.0000
761	Uniform Force	Global Y	0.1130		0.0000	1.0000

LOAD CASE WS 15 deg, Member Loads

Member	Type	Direction	Magnitude at Start (kips or kips-ft)	Magnitude at End (kips or kips-ft)	Start Position (x/L)	End Position from start (x/L)
762	Uniform Force	Global Y	0.1130		0.0000	1.0000
763	Uniform Force	Global Y	0.1130		0.0000	1.0000
764	Uniform Force	Global Y	0.1130		0.0000	1.0000
765	Uniform Force	Global Y	0.1130		0.0000	1.0000
766	Uniform Force	Global Y	0.1130		0.0000	1.0000
767	Uniform Force	Global Y	0.1130		0.0000	1.0000
768	Uniform Force	Global Y	0.1130		0.0000	1.0000
769	Uniform Force	Global Y	0.1130		0.0000	1.0000
770	Uniform Force	Global Y	0.1130		0.0000	1.0000
771	Uniform Force	Global Y	0.1130		0.0000	1.0000
772	Uniform Force	Global Y	0.1130		0.0000	1.0000
1	Uniform Moment	Local x	-0.9000		0.0000	1.0000
2	Uniform Moment	Local x	-0.9000		0.0000	1.0000
3	Uniform Moment	Local x	-0.9000		0.0000	1.0000
4	Uniform Moment	Local x	-0.9000		0.0000	1.0000
5	Uniform Moment	Local x	-0.9000		0.0000	1.0000
6	Uniform Moment	Local x	-0.9000		0.0000	1.0000
7	Uniform Moment	Local x	-0.9000		0.0000	1.0000
8	Uniform Moment	Local x	-0.9000		0.0000	1.0000
9	Uniform Moment	Local x	-0.9000		0.0000	1.0000
10	Uniform Moment	Local x	-0.9000		0.0000	1.0000
11	Uniform Moment	Local x	-0.9000		0.0000	1.0000
12	Uniform Moment	Local x	-0.9000		0.0000	1.0000
13	Uniform Moment	Local x	-0.9000		0.0000	1.0000
14	Uniform Moment	Local x	-0.9000		0.0000	1.0000
15	Uniform Moment	Local x	-0.9000		0.0000	1.0000
16	Uniform Moment	Local x	-0.9000		0.0000	1.0000
17	Uniform Moment	Local x	-0.9000		0.0000	1.0000
18	Uniform Moment	Local x	-0.9000		0.0000	1.0000
19	Uniform Moment	Local x	-0.9000		0.0000	1.0000
20	Uniform Moment	Local x	-0.9000		0.0000	1.0000
21	Uniform Moment	Local x	-0.9000		0.0000	1.0000
22	Uniform Moment	Local x	-0.9000		0.0000	1.0000
23	Uniform Moment	Local x	-0.9000		0.0000	1.0000

LOAD CASE WS 15 deg, Member Loads

Member	Type	Direction	Magnitude at Start (kips or kips-ft)	Magnitude at End (kips or kips-ft)	Start Position (x/L)	End Position from start (x/L)
24	Uniform Moment	Local x	-0.9000		0.0000	1.0000
25	Uniform Moment	Local x	-0.9000		0.0000	1.0000
26	Uniform Moment	Local x	-0.9000		0.0000	1.0000
27	Uniform Moment	Local x	-0.9000		0.0000	1.0000
28	Uniform Moment	Local x	-0.9000		0.0000	1.0000
29	Uniform Moment	Local x	-0.9000		0.0000	1.0000
30	Uniform Moment	Local x	-0.9000		0.0000	1.0000
31	Uniform Moment	Local x	-0.9000		0.0000	1.0000
32	Uniform Moment	Local x	-0.9000		0.0000	1.0000
33	Uniform Moment	Local x	-0.9000		0.0000	1.0000
34	Uniform Moment	Local x	-0.9000		0.0000	1.0000
35	Uniform Moment	Local x	-0.9000		0.0000	1.0000
36	Uniform Moment	Local x	-0.9000		0.0000	1.0000
37	Uniform Moment	Local x	-0.9000		0.0000	1.0000
38	Uniform Moment	Local x	-0.9000		0.0000	1.0000
39	Uniform Moment	Local x	-0.9000		0.0000	1.0000
40	Uniform Moment	Local x	-0.9000		0.0000	1.0000
41	Uniform Moment	Local x	-0.9000		0.0000	1.0000
42	Uniform Moment	Local x	-0.9000		0.0000	1.0000
43	Uniform Moment	Local x	-0.9000		0.0000	1.0000
44	Uniform Moment	Local x	-0.9000		0.0000	1.0000
45	Uniform Moment	Local x	-0.9000		0.0000	1.0000
46	Uniform Moment	Local x	-0.9000		0.0000	1.0000
47	Uniform Moment	Local x	-0.9000		0.0000	1.0000
48	Uniform Moment	Local x	-0.9000		0.0000	1.0000
49	Uniform Moment	Local x	-0.9000		0.0000	1.0000
50	Uniform Moment	Local x	-0.9000		0.0000	1.0000
51	Uniform Moment	Local x	-0.9000		0.0000	1.0000
52	Uniform Moment	Local x	-0.9000		0.0000	1.0000
53	Uniform Moment	Local x	-0.9000		0.0000	1.0000
54	Uniform Moment	Local x	-0.9000		0.0000	1.0000
55	Uniform Moment	Local x	-0.9000		0.0000	1.0000
56	Uniform Moment	Local x	-0.9000		0.0000	1.0000
57	Uniform Moment	Local x	-0.9000		0.0000	1.0000

LOAD CASE WS 15 deg, Member Loads

Member	Type	Direction	Magnitude at Start (kips or kips-ft)	Magnitude at End (kips or kips-ft)	Start Position (x/L)	End Position from start (x/L)
1	Uniform Force	Local x	0.0610		0.0000	1.0000
2	Uniform Force	Local x	0.0610		0.0000	1.0000
3	Uniform Force	Local x	0.0610		0.0000	1.0000
4	Uniform Force	Local x	0.0610		0.0000	1.0000
5	Uniform Force	Local x	0.0610		0.0000	1.0000
6	Uniform Force	Local x	0.0610		0.0000	1.0000
7	Uniform Force	Local x	0.0610		0.0000	1.0000
8	Uniform Force	Local x	0.0610		0.0000	1.0000
9	Uniform Force	Local x	0.0610		0.0000	1.0000
10	Uniform Force	Local x	0.0610		0.0000	1.0000
11	Uniform Force	Local x	0.0610		0.0000	1.0000
12	Uniform Force	Local x	0.0610		0.0000	1.0000
13	Uniform Force	Local x	0.0610		0.0000	1.0000
14	Uniform Force	Local x	0.0610		0.0000	1.0000
15	Uniform Force	Local x	0.0610		0.0000	1.0000
16	Uniform Force	Local x	0.0610		0.0000	1.0000
17	Uniform Force	Local x	0.0610		0.0000	1.0000
18	Uniform Force	Local x	0.0610		0.0000	1.0000
19	Uniform Force	Local x	0.0610		0.0000	1.0000
20	Uniform Force	Local x	0.0610		0.0000	1.0000
21	Uniform Force	Local x	0.0610		0.0000	1.0000
22	Uniform Force	Local x	0.0610		0.0000	1.0000
23	Uniform Force	Local x	0.0610		0.0000	1.0000
24	Uniform Force	Local x	0.0610		0.0000	1.0000
25	Uniform Force	Local x	0.0610		0.0000	1.0000
26	Uniform Force	Local x	0.0610		0.0000	1.0000
27	Uniform Force	Local x	0.0610		0.0000	1.0000
28	Uniform Force	Local x	0.0610		0.0000	1.0000
29	Uniform Force	Local x	0.0610		0.0000	1.0000
30	Uniform Force	Local x	0.0610		0.0000	1.0000
31	Uniform Force	Local x	0.0610		0.0000	1.0000
32	Uniform Force	Local x	0.0610		0.0000	1.0000
33	Uniform Force	Local x	0.0610		0.0000	1.0000
34	Uniform Force	Local x	0.0610		0.0000	1.0000

LOAD CASE WS 15 deg, Member Loads

Member	Type	Direction	Magnitude at Start (kips or kips-ft)	Magnitude at End (kips or kips-ft)	Start Position (x/L)	End Position from start (x/L)
35	Uniform Force	Local x	0.0610		0.0000	1.0000
36	Uniform Force	Local x	0.0610		0.0000	1.0000
37	Uniform Force	Local x	0.0610		0.0000	1.0000
38	Uniform Force	Local x	0.0610		0.0000	1.0000
39	Uniform Force	Local x	0.0610		0.0000	1.0000
40	Uniform Force	Local x	0.0610		0.0000	1.0000
41	Uniform Force	Local x	0.0610		0.0000	1.0000
42	Uniform Force	Local x	0.0610		0.0000	1.0000
43	Uniform Force	Local x	0.0610		0.0000	1.0000
44	Uniform Force	Local x	0.0610		0.0000	1.0000
45	Uniform Force	Local x	0.0610		0.0000	1.0000
46	Uniform Force	Local x	0.0610		0.0000	1.0000
47	Uniform Force	Local x	0.0610		0.0000	1.0000
48	Uniform Force	Local x	0.0610		0.0000	1.0000
49	Uniform Force	Local x	0.0610		0.0000	1.0000
50	Uniform Force	Local x	0.0610		0.0000	1.0000
51	Uniform Force	Local x	0.0610		0.0000	1.0000
52	Uniform Force	Local x	0.0610		0.0000	1.0000
53	Uniform Force	Local x	0.0610		0.0000	1.0000
54	Uniform Force	Local x	0.0610		0.0000	1.0000
55	Uniform Force	Local x	0.0610		0.0000	1.0000
56	Uniform Force	Local x	0.0610		0.0000	1.0000
57	Uniform Force	Local x	0.0610		0.0000	1.0000
101	Uniform Force	Local x	0.0210		0.0000	1.0000
102	Uniform Force	Local x	0.0210		0.0000	1.0000
103	Uniform Force	Local x	0.0210		0.0000	1.0000
104	Uniform Force	Local x	0.0210		0.0000	1.0000
105	Uniform Force	Local x	0.0210		0.0000	1.0000
106	Uniform Force	Local x	0.0210		0.0000	1.0000
107	Uniform Force	Local x	0.0210		0.0000	1.0000
108	Uniform Force	Local x	0.0210		0.0000	1.0000
109	Uniform Force	Local x	0.0210		0.0000	1.0000
110	Uniform Force	Local x	0.0210		0.0000	1.0000
111	Uniform Force	Local x	0.0210		0.0000	1.0000

LOAD CASE WS 15 deg, Member Loads

Member	Type	Direction	Magnitude at Start (kips or kips-ft)	Magnitude at End (kips or kips-ft)	Start Position (x/L)	End Position from start (x/L)
112	Uniform Force	Local x	0.0210		0.0000	1.0000
113	Uniform Force	Local x	0.0210		0.0000	1.0000
114	Uniform Force	Local x	0.0210		0.0000	1.0000
115	Uniform Force	Local x	0.0210		0.0000	1.0000
116	Uniform Force	Local x	0.0210		0.0000	1.0000
117	Uniform Force	Local x	0.0210		0.0000	1.0000
118	Uniform Force	Local x	0.0210		0.0000	1.0000
119	Uniform Force	Local x	0.0210		0.0000	1.0000
120	Uniform Force	Local x	0.0210		0.0000	1.0000
121	Uniform Force	Local x	0.0210		0.0000	1.0000
122	Uniform Force	Local x	0.0210		0.0000	1.0000
123	Uniform Force	Local x	0.0210		0.0000	1.0000
124	Uniform Force	Local x	0.0210		0.0000	1.0000
125	Uniform Force	Local x	0.0210		0.0000	1.0000
126	Uniform Force	Local x	0.0210		0.0000	1.0000
127	Uniform Force	Local x	0.0210		0.0000	1.0000
128	Uniform Force	Local x	0.0210		0.0000	1.0000
129	Uniform Force	Local x	0.0210		0.0000	1.0000
130	Uniform Force	Local x	0.0210		0.0000	1.0000
131	Uniform Force	Local x	0.0210		0.0000	1.0000
132	Uniform Force	Local x	0.0210		0.0000	1.0000
133	Uniform Force	Local x	0.0210		0.0000	1.0000
134	Uniform Force	Local x	0.0210		0.0000	1.0000
135	Uniform Force	Local x	0.0210		0.0000	1.0000
136	Uniform Force	Local x	0.0210		0.0000	1.0000
137	Uniform Force	Local x	0.0210		0.0000	1.0000
138	Uniform Force	Local x	0.0210		0.0000	1.0000
139	Uniform Force	Local x	0.0210		0.0000	1.0000
140	Uniform Force	Local x	0.0210		0.0000	1.0000
141	Uniform Force	Local x	0.0210		0.0000	1.0000
142	Uniform Force	Local x	0.0210		0.0000	1.0000
143	Uniform Force	Local x	0.0210		0.0000	1.0000
144	Uniform Force	Local x	0.0210		0.0000	1.0000
145	Uniform Force	Local x	0.0210		0.0000	1.0000

LOAD CASE WS 15 deg, Member Loads

Member	Type	Direction	Magnitude at Start (kips or kips-ft)	Magnitude at End (kips or kips-ft)	Start Position (x/L)	End Position from start (x/L)
146	Uniform Force	Local x	0.0210		0.0000	1.0000
147	Uniform Force	Local x	0.0210		0.0000	1.0000
148	Uniform Force	Local x	0.0210		0.0000	1.0000
149	Uniform Force	Local x	0.0210		0.0000	1.0000
150	Uniform Force	Local x	0.0210		0.0000	1.0000
151	Uniform Force	Local x	0.0210		0.0000	1.0000
152	Uniform Force	Local x	0.0210		0.0000	1.0000
153	Uniform Force	Local x	0.0210		0.0000	1.0000
154	Uniform Force	Local x	0.0210		0.0000	1.0000
155	Uniform Force	Local x	0.0210		0.0000	1.0000
156	Uniform Force	Local x	0.0210		0.0000	1.0000
157	Uniform Force	Local x	0.0210		0.0000	1.0000
158	Uniform Force	Local x	0.0210		0.0000	1.0000
159	Uniform Force	Local x	0.0210		0.0000	1.0000
160	Uniform Force	Local x	0.0210		0.0000	1.0000
701	Uniform Force	Global X	0.0190		0.0000	1.0000
702	Uniform Force	Global X	0.0190		0.0000	1.0000
703	Uniform Force	Global X	0.0190		0.0000	1.0000
704	Uniform Force	Global X	0.0190		0.0000	1.0000
705	Uniform Force	Global X	0.0190		0.0000	1.0000
706	Uniform Force	Global X	0.0190		0.0000	1.0000
707	Uniform Force	Global X	0.0190		0.0000	1.0000
708	Uniform Force	Global X	0.0190		0.0000	1.0000
709	Uniform Force	Global X	0.0190		0.0000	1.0000
710	Uniform Force	Global X	0.0190		0.0000	1.0000
711	Uniform Force	Global X	0.0190		0.0000	1.0000
712	Uniform Force	Global X	0.0190		0.0000	1.0000
713	Uniform Force	Global X	0.0190		0.0000	1.0000
714	Uniform Force	Global X	0.0190		0.0000	1.0000
715	Uniform Force	Global X	0.0190		0.0000	1.0000
716	Uniform Force	Global X	0.0190		0.0000	1.0000
717	Uniform Force	Global X	0.0190		0.0000	1.0000
718	Uniform Force	Global X	0.0190		0.0000	1.0000
719	Uniform Force	Global X	0.0190		0.0000	1.0000

LOAD CASE WS 15 deg, Member Loads

Member	Type	Direction	Magnitude at Start (kips or kips-ft)	Magnitude at End (kips or kips-ft)	Start Position (x/L)	End Position from start (x/L)
720	Uniform Force	Global X	0.0190		0.0000	1.0000
721	Uniform Force	Global X	0.0190		0.0000	1.0000
722	Uniform Force	Global X	0.0190		0.0000	1.0000
723	Uniform Force	Global X	0.0190		0.0000	1.0000
724	Uniform Force	Global X	0.0190		0.0000	1.0000
725	Uniform Force	Global X	0.0190		0.0000	1.0000
726	Uniform Force	Global X	0.0190		0.0000	1.0000
727	Uniform Force	Global X	0.0190		0.0000	1.0000
728	Uniform Force	Global X	0.0190		0.0000	1.0000
729	Uniform Force	Global X	0.0190		0.0000	1.0000
730	Uniform Force	Global X	0.0190		0.0000	1.0000
731	Uniform Force	Global X	0.0190		0.0000	1.0000
732	Uniform Force	Global X	0.0190		0.0000	1.0000
733	Uniform Force	Global X	0.0190		0.0000	1.0000
740	Uniform Force	Global X	0.0190		0.0000	1.0000
741	Uniform Force	Global X	0.0190		0.0000	1.0000
742	Uniform Force	Global X	0.0190		0.0000	1.0000
743	Uniform Force	Global X	0.0190		0.0000	1.0000
744	Uniform Force	Global X	0.0190		0.0000	1.0000
745	Uniform Force	Global X	0.0190		0.0000	1.0000
746	Uniform Force	Global X	0.0190		0.0000	1.0000
747	Uniform Force	Global X	0.0190		0.0000	1.0000
748	Uniform Force	Global X	0.0190		0.0000	1.0000
749	Uniform Force	Global X	0.0190		0.0000	1.0000
750	Uniform Force	Global X	0.0190		0.0000	1.0000
751	Uniform Force	Global X	0.0190		0.0000	1.0000
752	Uniform Force	Global X	0.0190		0.0000	1.0000
753	Uniform Force	Global X	0.0190		0.0000	1.0000
754	Uniform Force	Global X	0.0190		0.0000	1.0000
755	Uniform Force	Global X	0.0190		0.0000	1.0000
756	Uniform Force	Global X	0.0190		0.0000	1.0000
757	Uniform Force	Global X	0.0190		0.0000	1.0000
758	Uniform Force	Global X	0.0190		0.0000	1.0000
759	Uniform Force	Global X	0.0190		0.0000	1.0000

LOAD CASE WS 15 deg, Member Loads

Member	Type	Direction	Magnitude at Start (kips or kips-ft)	Magnitude at End (kips or kips-ft)	Start Position (x/L)	End Position from start (x/L)
760	Uniform Force	Global X	0.0190		0.0000	1.0000
761	Uniform Force	Global X	0.0190		0.0000	1.0000
762	Uniform Force	Global X	0.0190		0.0000	1.0000
763	Uniform Force	Global X	0.0190		0.0000	1.0000
764	Uniform Force	Global X	0.0190		0.0000	1.0000
765	Uniform Force	Global X	0.0190		0.0000	1.0000
766	Uniform Force	Global X	0.0190		0.0000	1.0000
767	Uniform Force	Global X	0.0190		0.0000	1.0000
768	Uniform Force	Global X	0.0190		0.0000	1.0000
769	Uniform Force	Global X	0.0190		0.0000	1.0000
770	Uniform Force	Global X	0.0190		0.0000	1.0000
771	Uniform Force	Global X	0.0190		0.0000	1.0000
772	Uniform Force	Global X	0.0190		0.0000	1.0000
2002	Uniform Force	Global Y	0.3900		0.0000	1.0000
2003	Uniform Force	Global Y	0.3900		0.0000	1.0000
2002	Trapezoidal Force	Global X	0.3100	0.2400	0.0000	1.0000
2003	Trapezoidal Force	Global X	0.2400	0.1700	0.0000	1.0000
1017	Uniform Force	Global Y	0.3250		0.0000	1.0000
1018	Uniform Force	Global Y	0.3250		0.0000	1.0000
1019	Uniform Force	Global Y	0.3250		0.0000	1.0000
1017	Uniform Force	Global X	0.0340		0.0000	1.0000
1018	Uniform Force	Global X	0.0340		0.0000	1.0000
1019	Uniform Force	Global X	0.0340		0.0000	1.0000
1013	Uniform Force	Global Y	0.3250		0.0000	1.0000
1014	Uniform Force	Global Y	0.3250		0.0000	1.0000
1015	Uniform Force	Global Y	0.3250		0.0000	1.0000
1013	Uniform Force	Global X	0.0340		0.0000	1.0000
1014	Uniform Force	Global X	0.0340		0.0000	1.0000
1015	Uniform Force	Global X	0.0340		0.0000	1.0000
3017	Uniform Force	Global Y	0.3250		0.0000	1.0000
3018	Uniform Force	Global Y	0.3250		0.0000	1.0000
3019	Uniform Force	Global Y	0.3250		0.0000	1.0000
3017	Uniform Force	Global X	0.0340		0.0000	1.0000
3018	Uniform Force	Global X	0.0340		0.0000	1.0000

LOAD CASE WS 15 deg, Member Loads

Member	Type	Direction	Magnitude at Start (kips or kips-ft)	Magnitude at End (kips or kips-ft)	Start Position (x/L)	End Position from start (x/L)
3019	Uniform Force	Global X	0.0340		0.0000	1.0000
3013	Uniform Force	Global Y	0.3250		0.0000	1.0000
3014	Uniform Force	Global Y	0.3250		0.0000	1.0000
3015	Uniform Force	Global Y	0.3250		0.0000	1.0000
3013	Uniform Force	Global X	0.0340		0.0000	1.0000
3014	Uniform Force	Global X	0.0340		0.0000	1.0000
3015	Uniform Force	Global X	0.0340		0.0000	1.0000
1006	Uniform Force	Global X	0.0850		0.0000	1.0000
1007	Uniform Force	Global X	0.0850		0.0000	1.0000
1008	Uniform Force	Global X	0.0850		0.0000	1.0000
1009	Uniform Force	Global X	0.0850		0.0000	1.0000
1010	Uniform Force	Global X	0.0850		0.0000	1.0000
1011	Uniform Force	Global X	0.0850		0.0000	1.0000
1012	Uniform Force	Global X	0.0850		0.0000	1.0000
3006	Uniform Force	Global X	0.0850		0.0000	1.0000
3007	Uniform Force	Global X	0.0850		0.0000	1.0000
3008	Uniform Force	Global X	0.0850		0.0000	1.0000
3009	Uniform Force	Global X	0.0850		0.0000	1.0000
3010	Uniform Force	Global X	0.0850		0.0000	1.0000
3011	Uniform Force	Global X	0.0850		0.0000	1.0000
3012	Uniform Force	Global X	0.0850		0.0000	1.0000
501	Uniform Force	Global Y	0.0940		0.0000	1.0000
502	Uniform Force	Global Y	0.0940		0.0000	1.0000
503	Uniform Force	Global Y	0.0940		0.0000	1.0000
504	Uniform Force	Global Y	0.0940		0.0000	1.0000
505	Uniform Force	Global Y	0.0940		0.0000	1.0000
601	Uniform Force	Global Y	0.0940		0.0000	1.0000
602	Uniform Force	Global Y	0.0940		0.0000	1.0000
603	Uniform Force	Global Y	0.0940		0.0000	1.0000
604	Uniform Force	Global Y	0.0940		0.0000	1.0000
605	Uniform Force	Global Y	0.0940		0.0000	1.0000
401	Uniform Force	Global Y	0.3900		0.0000	1.0000
402	Uniform Force	Global Y	0.3900		0.0000	1.0000
403	Uniform Force	Global Y	0.3900		0.0000	1.0000

LOAD CASE WS 15 deg, Member Loads

Member	Type	Direction	Magnitude at Start (kips or kips-ft)	Magnitude at End (kips or kips-ft)	Start Position (x/L)	End Position from start (x/L)
405	Trapezoidal Force	Global Y	0.4900	0.4700	0.0000	1.0000
406	Trapezoidal Force	Global Y	0.4700	0.4500	0.0000	1.0000
407	Trapezoidal Force	Global Y	0.4500	0.4300	0.0000	1.0000
408	Trapezoidal Force	Global Y	0.4300	0.3900	0.0000	1.0000
409	Trapezoidal Force	Global Y	0.3900	0.3800	0.0000	1.0000
410	Trapezoidal Force	Global Y	0.3800	0.3600	0.0000	1.0000
411	Trapezoidal Force	Global Y	0.3600	0.3400	0.0000	1.0000
412	Trapezoidal Force	Global Y	0.3400	0.3200	0.0000	1.0000
413	Trapezoidal Force	Global Y	0.3200	0.3100	0.0000	1.0000
501	Uniform Force	Global X	0.0250		0.0000	1.0000
502	Uniform Force	Global X	0.0250		0.0000	1.0000
503	Uniform Force	Global X	0.0250		0.0000	1.0000
504	Uniform Force	Global X	0.0250		0.0000	1.0000
505	Uniform Force	Global X	0.0250		0.0000	1.0000
601	Uniform Force	Global X	0.0250		0.0000	1.0000
602	Uniform Force	Global X	0.0250		0.0000	1.0000
603	Uniform Force	Global X	0.0250		0.0000	1.0000
604	Uniform Force	Global X	0.0250		0.0000	1.0000
605	Uniform Force	Global X	0.0250		0.0000	1.0000
401	Uniform Force	Global X	0.0850		0.0000	1.0000
402	Uniform Force	Global X	0.0850		0.0000	1.0000
403	Uniform Force	Global X	0.0850		0.0000	1.0000
405	Trapezoidal Force	Global X	0.1300	0.1300	0.0000	1.0000
406	Trapezoidal Force	Global X	0.1300	0.1200	0.0000	1.0000
407	Trapezoidal Force	Global X	0.1200	0.1200	0.0000	1.0000
408	Trapezoidal Force	Global X	0.1200	0.1100	0.0000	1.0000
409	Trapezoidal Force	Global X	0.1100	0.1000	0.0000	1.0000
410	Trapezoidal Force	Global X	0.1000	0.1000	0.0000	1.0000
411	Trapezoidal Force	Global X	0.1000	0.0900	0.0000	1.0000
412	Trapezoidal Force	Global X	0.0900	0.0900	0.0000	1.0000
413	Trapezoidal Force	Global X	0.0900	0.0800	0.0000	1.0000

LOAD CASE WS -45 deg, Member Loads

Member	Type	Direction	Magnitude at Start (kips or kips-ft)	Magnitude at End (kips or kips-ft)	Start Position (x/L)	End Position from start (x/L)
1	Uniform Force	Global Y	0.2390		0.0000	1.0000
2	Uniform Force	Global Y	0.2390		0.0000	1.0000
3	Uniform Force	Global Y	0.2390		0.0000	1.0000
4	Uniform Force	Global Y	0.2390		0.0000	1.0000
5	Uniform Force	Global Y	0.2390		0.0000	1.0000
6	Uniform Force	Global Y	0.2390		0.0000	1.0000
7	Uniform Force	Global Y	0.2390		0.0000	1.0000
8	Uniform Force	Global Y	0.2390		0.0000	1.0000
9	Uniform Force	Global Y	0.2390		0.0000	1.0000
10	Uniform Force	Global Y	0.2390		0.0000	1.0000
11	Uniform Force	Global Y	0.2390		0.0000	1.0000
12	Uniform Force	Global Y	0.2390		0.0000	1.0000
13	Uniform Force	Global Y	0.2390		0.0000	1.0000
14	Uniform Force	Global Y	0.2390		0.0000	1.0000
15	Uniform Force	Global Y	0.2390		0.0000	1.0000
16	Uniform Force	Global Y	0.2390		0.0000	1.0000
17	Uniform Force	Global Y	0.2390		0.0000	1.0000
18	Uniform Force	Global Y	0.2390		0.0000	1.0000
19	Uniform Force	Global Y	0.2390		0.0000	1.0000
20	Uniform Force	Global Y	0.2390		0.0000	1.0000
21	Uniform Force	Global Y	0.2390		0.0000	1.0000
22	Uniform Force	Global Y	0.2390		0.0000	1.0000
23	Uniform Force	Global Y	0.2390		0.0000	1.0000
24	Uniform Force	Global Y	0.2390		0.0000	1.0000
25	Uniform Force	Global Y	0.2390		0.0000	1.0000
26	Uniform Force	Global Y	0.2390		0.0000	1.0000
27	Uniform Force	Global Y	0.2390		0.0000	1.0000
28	Uniform Force	Global Y	0.2390		0.0000	1.0000
29	Uniform Force	Global Y	0.2390		0.0000	1.0000
30	Uniform Force	Global Y	0.2390		0.0000	1.0000
31	Uniform Force	Global Y	0.2390		0.0000	1.0000
32	Uniform Force	Global Y	0.2390		0.0000	1.0000

LOAD CASE WS -45 deg, Member Loads

Member	Type	Direction	Magnitude at Start (kips or kips-ft)	Magnitude at End (kips or kips-ft)	Start Position (x/L)	End Position from start (x/L)
33	Uniform Force	Global Y	0.2390		0.0000	1.0000
34	Uniform Force	Global Y	0.2390		0.0000	1.0000
35	Uniform Force	Global Y	0.2390		0.0000	1.0000
36	Uniform Force	Global Y	0.2390		0.0000	1.0000
37	Uniform Force	Global Y	0.2390		0.0000	1.0000
38	Uniform Force	Global Y	0.2390		0.0000	1.0000
39	Uniform Force	Global Y	0.2390		0.0000	1.0000
40	Uniform Force	Global Y	0.2390		0.0000	1.0000
41	Uniform Force	Global Y	0.2390		0.0000	1.0000
42	Uniform Force	Global Y	0.2390		0.0000	1.0000
43	Uniform Force	Global Y	0.2390		0.0000	1.0000
44	Uniform Force	Global Y	0.2390		0.0000	1.0000
45	Uniform Force	Global Y	0.2390		0.0000	1.0000
46	Uniform Force	Global Y	0.2390		0.0000	1.0000
47	Uniform Force	Global Y	0.2390		0.0000	1.0000
48	Uniform Force	Global Y	0.2390		0.0000	1.0000
49	Uniform Force	Global Y	0.2390		0.0000	1.0000
50	Uniform Force	Global Y	0.2390		0.0000	1.0000
51	Uniform Force	Global Y	0.2390		0.0000	1.0000
52	Uniform Force	Global Y	0.2390		0.0000	1.0000
53	Uniform Force	Global Y	0.2390		0.0000	1.0000
54	Uniform Force	Global Y	0.2390		0.0000	1.0000
55	Uniform Force	Global Y	0.2390		0.0000	1.0000
56	Uniform Force	Global Y	0.2390		0.0000	1.0000
57	Uniform Force	Global Y	0.2390		0.0000	1.0000
101	Uniform Force	Global Y	0.0820		0.0000	1.0000
102	Uniform Force	Global Y	0.0820		0.0000	1.0000
103	Uniform Force	Global Y	0.0820		0.0000	1.0000
104	Uniform Force	Global Y	0.0820		0.0000	1.0000
105	Uniform Force	Global Y	0.0820		0.0000	1.0000
106	Uniform Force	Global Y	0.0820		0.0000	1.0000
107	Uniform Force	Global Y	0.0820		0.0000	1.0000
108	Uniform Force	Global Y	0.0820		0.0000	1.0000
109	Uniform Force	Global Y	0.0820		0.0000	1.0000

LOAD CASE WS -45 deg, Member Loads

Member	Type	Direction	Magnitude at Start (kips or kips-ft)	Magnitude at End (kips or kips-ft)	Start Position (x/L)	End Position from start (x/L)
110	Uniform Force	Global Y	0.0820		0.0000	1.0000
111	Uniform Force	Global Y	0.0820		0.0000	1.0000
112	Uniform Force	Global Y	0.0820		0.0000	1.0000
113	Uniform Force	Global Y	0.0820		0.0000	1.0000
114	Uniform Force	Global Y	0.0820		0.0000	1.0000
115	Uniform Force	Global Y	0.0820		0.0000	1.0000
116	Uniform Force	Global Y	0.0820		0.0000	1.0000
117	Uniform Force	Global Y	0.0820		0.0000	1.0000
118	Uniform Force	Global Y	0.0820		0.0000	1.0000
119	Uniform Force	Global Y	0.0820		0.0000	1.0000
120	Uniform Force	Global Y	0.0820		0.0000	1.0000
121	Uniform Force	Global Y	0.0820		0.0000	1.0000
122	Uniform Force	Global Y	0.0820		0.0000	1.0000
123	Uniform Force	Global Y	0.0820		0.0000	1.0000
124	Uniform Force	Global Y	0.0820		0.0000	1.0000
125	Uniform Force	Global Y	0.0820		0.0000	1.0000
126	Uniform Force	Global Y	0.0820		0.0000	1.0000
127	Uniform Force	Global Y	0.0820		0.0000	1.0000
128	Uniform Force	Global Y	0.0820		0.0000	1.0000
129	Uniform Force	Global Y	0.0820		0.0000	1.0000
130	Uniform Force	Global Y	0.0820		0.0000	1.0000
131	Uniform Force	Global Y	0.0820		0.0000	1.0000
132	Uniform Force	Global Y	0.0820		0.0000	1.0000
133	Uniform Force	Global Y	0.0820		0.0000	1.0000
134	Uniform Force	Global Y	0.0820		0.0000	1.0000
135	Uniform Force	Global Y	0.0820		0.0000	1.0000
136	Uniform Force	Global Y	0.0820		0.0000	1.0000
137	Uniform Force	Global Y	0.0820		0.0000	1.0000
138	Uniform Force	Global Y	0.0820		0.0000	1.0000
139	Uniform Force	Global Y	0.0820		0.0000	1.0000
140	Uniform Force	Global Y	0.0820		0.0000	1.0000
141	Uniform Force	Global Y	0.0820		0.0000	1.0000
142	Uniform Force	Global Y	0.0820		0.0000	1.0000
143	Uniform Force	Global Y	0.0820		0.0000	1.0000

LOAD CASE WS -45 deg, Member Loads

Member	Type	Direction	Magnitude at Start (kips or kips-ft)	Magnitude at End (kips or kips-ft)	Start Position (x/L)	End Position from start (x/L)
144	Uniform Force	Global Y	0.0820		0.0000	1.0000
145	Uniform Force	Global Y	0.0820		0.0000	1.0000
146	Uniform Force	Global Y	0.0820		0.0000	1.0000
147	Uniform Force	Global Y	0.0820		0.0000	1.0000
148	Uniform Force	Global Y	0.0820		0.0000	1.0000
149	Uniform Force	Global Y	0.0820		0.0000	1.0000
150	Uniform Force	Global Y	0.0820		0.0000	1.0000
151	Uniform Force	Global Y	0.0820		0.0000	1.0000
152	Uniform Force	Global Y	0.0820		0.0000	1.0000
153	Uniform Force	Global Y	0.0820		0.0000	1.0000
154	Uniform Force	Global Y	0.0820		0.0000	1.0000
155	Uniform Force	Global Y	0.0820		0.0000	1.0000
156	Uniform Force	Global Y	0.0820		0.0000	1.0000
157	Uniform Force	Global Y	0.0820		0.0000	1.0000
158	Uniform Force	Global Y	0.0820		0.0000	1.0000
159	Uniform Force	Global Y	0.0820		0.0000	1.0000
160	Uniform Force	Global Y	0.0820		0.0000	1.0000
701	Uniform Force	Global Y	0.0760		0.0000	1.0000
702	Uniform Force	Global Y	0.0760		0.0000	1.0000
703	Uniform Force	Global Y	0.0760		0.0000	1.0000
704	Uniform Force	Global Y	0.0760		0.0000	1.0000
705	Uniform Force	Global Y	0.0760		0.0000	1.0000
706	Uniform Force	Global Y	0.0760		0.0000	1.0000
707	Uniform Force	Global Y	0.0760		0.0000	1.0000
708	Uniform Force	Global Y	0.0760		0.0000	1.0000
709	Uniform Force	Global Y	0.0760		0.0000	1.0000
710	Uniform Force	Global Y	0.0760		0.0000	1.0000
711	Uniform Force	Global Y	0.0760		0.0000	1.0000
712	Uniform Force	Global Y	0.0760		0.0000	1.0000
713	Uniform Force	Global Y	0.0760		0.0000	1.0000
714	Uniform Force	Global Y	0.0760		0.0000	1.0000
715	Uniform Force	Global Y	0.0760		0.0000	1.0000
716	Uniform Force	Global Y	0.0760		0.0000	1.0000
717	Uniform Force	Global Y	0.0760		0.0000	1.0000

LOAD CASE WS -45 deg, Member Loads

Member	Type	Direction	Magnitude at Start (kips or kips-ft)	Magnitude at End (kips or kips-ft)	Start Position (x/L)	End Position from start (x/L)
718	Uniform Force	Global Y	0.0760		0.0000	1.0000
719	Uniform Force	Global Y	0.0760		0.0000	1.0000
720	Uniform Force	Global Y	0.0760		0.0000	1.0000
721	Uniform Force	Global Y	0.0760		0.0000	1.0000
722	Uniform Force	Global Y	0.0760		0.0000	1.0000
723	Uniform Force	Global Y	0.0760		0.0000	1.0000
724	Uniform Force	Global Y	0.0760		0.0000	1.0000
725	Uniform Force	Global Y	0.0760		0.0000	1.0000
726	Uniform Force	Global Y	0.0760		0.0000	1.0000
727	Uniform Force	Global Y	0.0760		0.0000	1.0000
728	Uniform Force	Global Y	0.0760		0.0000	1.0000
729	Uniform Force	Global Y	0.0760		0.0000	1.0000
730	Uniform Force	Global Y	0.0760		0.0000	1.0000
731	Uniform Force	Global Y	0.0760		0.0000	1.0000
732	Uniform Force	Global Y	0.0760		0.0000	1.0000
733	Uniform Force	Global Y	0.0760		0.0000	1.0000
740	Uniform Force	Global Y	0.0760		0.0000	1.0000
741	Uniform Force	Global Y	0.0760		0.0000	1.0000
742	Uniform Force	Global Y	0.0760		0.0000	1.0000
743	Uniform Force	Global Y	0.0760		0.0000	1.0000
744	Uniform Force	Global Y	0.0760		0.0000	1.0000
745	Uniform Force	Global Y	0.0760		0.0000	1.0000
746	Uniform Force	Global Y	0.0760		0.0000	1.0000
747	Uniform Force	Global Y	0.0760		0.0000	1.0000
748	Uniform Force	Global Y	0.0760		0.0000	1.0000
749	Uniform Force	Global Y	0.0760		0.0000	1.0000
750	Uniform Force	Global Y	0.0760		0.0000	1.0000
751	Uniform Force	Global Y	0.0760		0.0000	1.0000
752	Uniform Force	Global Y	0.0760		0.0000	1.0000
753	Uniform Force	Global Y	0.0760		0.0000	1.0000
754	Uniform Force	Global Y	0.0760		0.0000	1.0000
755	Uniform Force	Global Y	0.0760		0.0000	1.0000
756	Uniform Force	Global Y	0.0760		0.0000	1.0000
757	Uniform Force	Global Y	0.0760		0.0000	1.0000

LOAD CASE WS -45 deg, Member Loads

Member	Type	Direction	Magnitude at Start (kips or kips-ft)	Magnitude at End (kips or kips-ft)	Start Position (x/L)	End Position from start (x/L)
758	Uniform Force	Global Y	0.0760		0.0000	1.0000
759	Uniform Force	Global Y	0.0760		0.0000	1.0000
760	Uniform Force	Global Y	0.0760		0.0000	1.0000
761	Uniform Force	Global Y	0.0760		0.0000	1.0000
762	Uniform Force	Global Y	0.0760		0.0000	1.0000
763	Uniform Force	Global Y	0.0760		0.0000	1.0000
764	Uniform Force	Global Y	0.0760		0.0000	1.0000
765	Uniform Force	Global Y	0.0760		0.0000	1.0000
766	Uniform Force	Global Y	0.0760		0.0000	1.0000
767	Uniform Force	Global Y	0.0760		0.0000	1.0000
768	Uniform Force	Global Y	0.0760		0.0000	1.0000
769	Uniform Force	Global Y	0.0760		0.0000	1.0000
770	Uniform Force	Global Y	0.0760		0.0000	1.0000
771	Uniform Force	Global Y	0.0760		0.0000	1.0000
772	Uniform Force	Global Y	0.0760		0.0000	1.0000
1	Uniform Moment	Local x	-0.6000		0.0000	1.0000
2	Uniform Moment	Local x	-0.6000		0.0000	1.0000
3	Uniform Moment	Local x	-0.6000		0.0000	1.0000
4	Uniform Moment	Local x	-0.6000		0.0000	1.0000
5	Uniform Moment	Local x	-0.6000		0.0000	1.0000
6	Uniform Moment	Local x	-0.6000		0.0000	1.0000
7	Uniform Moment	Local x	-0.6000		0.0000	1.0000
8	Uniform Moment	Local x	-0.6000		0.0000	1.0000
9	Uniform Moment	Local x	-0.6000		0.0000	1.0000
10	Uniform Moment	Local x	-0.6000		0.0000	1.0000
11	Uniform Moment	Local x	-0.6000		0.0000	1.0000
12	Uniform Moment	Local x	-0.6000		0.0000	1.0000
13	Uniform Moment	Local x	-0.6000		0.0000	1.0000
14	Uniform Moment	Local x	-0.6000		0.0000	1.0000
15	Uniform Moment	Local x	-0.6000		0.0000	1.0000
16	Uniform Moment	Local x	-0.6000		0.0000	1.0000
17	Uniform Moment	Local x	-0.6000		0.0000	1.0000
18	Uniform Moment	Local x	-0.6000		0.0000	1.0000
19	Uniform Moment	Local x	-0.6000		0.0000	1.0000

LOAD CASE WS -45 deg, Member Loads

Member	Type	Direction	Magnitude at Start (kips or kips-ft)	Magnitude at End (kips or kips-ft)	Start Position (x/L)	End Position from start (x/L)
20	Uniform Moment	Local x	-0.6000		0.0000	1.0000
21	Uniform Moment	Local x	-0.6000		0.0000	1.0000
22	Uniform Moment	Local x	-0.6000		0.0000	1.0000
23	Uniform Moment	Local x	-0.6000		0.0000	1.0000
24	Uniform Moment	Local x	-0.6000		0.0000	1.0000
25	Uniform Moment	Local x	-0.6000		0.0000	1.0000
26	Uniform Moment	Local x	-0.6000		0.0000	1.0000
27	Uniform Moment	Local x	-0.6000		0.0000	1.0000
28	Uniform Moment	Local x	-0.6000		0.0000	1.0000
29	Uniform Moment	Local x	-0.6000		0.0000	1.0000
30	Uniform Moment	Local x	-0.6000		0.0000	1.0000
31	Uniform Moment	Local x	-0.6000		0.0000	1.0000
32	Uniform Moment	Local x	-0.6000		0.0000	1.0000
33	Uniform Moment	Local x	-0.6000		0.0000	1.0000
34	Uniform Moment	Local x	-0.6000		0.0000	1.0000
35	Uniform Moment	Local x	-0.6000		0.0000	1.0000
36	Uniform Moment	Local x	-0.6000		0.0000	1.0000
37	Uniform Moment	Local x	-0.6000		0.0000	1.0000
38	Uniform Moment	Local x	-0.6000		0.0000	1.0000
39	Uniform Moment	Local x	-0.6000		0.0000	1.0000
40	Uniform Moment	Local x	-0.6000		0.0000	1.0000
41	Uniform Moment	Local x	-0.6000		0.0000	1.0000
42	Uniform Moment	Local x	-0.6000		0.0000	1.0000
43	Uniform Moment	Local x	-0.6000		0.0000	1.0000
44	Uniform Moment	Local x	-0.6000		0.0000	1.0000
45	Uniform Moment	Local x	-0.6000		0.0000	1.0000
46	Uniform Moment	Local x	-0.6000		0.0000	1.0000
47	Uniform Moment	Local x	-0.6000		0.0000	1.0000
48	Uniform Moment	Local x	-0.6000		0.0000	1.0000
49	Uniform Moment	Local x	-0.6000		0.0000	1.0000
50	Uniform Moment	Local x	-0.6000		0.0000	1.0000
51	Uniform Moment	Local x	-0.6000		0.0000	1.0000
52	Uniform Moment	Local x	-0.6000		0.0000	1.0000
53	Uniform Moment	Local x	-0.6000		0.0000	1.0000

LOAD CASE WS -45 deg, Member Loads

Member	Type	Direction	Magnitude at Start (kips or kips-ft)	Magnitude at End (kips or kips-ft)	Start Position (x/L)	End Position from start (x/L)
54	Uniform Moment	Local x	-0.6000		0.0000	1.0000
55	Uniform Moment	Local x	-0.6000		0.0000	1.0000
56	Uniform Moment	Local x	-0.6000		0.0000	1.0000
57	Uniform Moment	Local x	-0.6000		0.0000	1.0000
1	Uniform Force	Local x	-0.2100		0.0000	1.0000
2	Uniform Force	Local x	-0.2100		0.0000	1.0000
3	Uniform Force	Local x	-0.2100		0.0000	1.0000
4	Uniform Force	Local x	-0.2100		0.0000	1.0000
5	Uniform Force	Local x	-0.2100		0.0000	1.0000
6	Uniform Force	Local x	-0.2100		0.0000	1.0000
7	Uniform Force	Local x	-0.2100		0.0000	1.0000
8	Uniform Force	Local x	-0.2100		0.0000	1.0000
9	Uniform Force	Local x	-0.2100		0.0000	1.0000
10	Uniform Force	Local x	-0.2100		0.0000	1.0000
11	Uniform Force	Local x	-0.2100		0.0000	1.0000
12	Uniform Force	Local x	-0.2100		0.0000	1.0000
13	Uniform Force	Local x	-0.2100		0.0000	1.0000
14	Uniform Force	Local x	-0.2100		0.0000	1.0000
15	Uniform Force	Local x	-0.2100		0.0000	1.0000
16	Uniform Force	Local x	-0.2100		0.0000	1.0000
17	Uniform Force	Local x	-0.2100		0.0000	1.0000
18	Uniform Force	Local x	-0.2100		0.0000	1.0000
19	Uniform Force	Local x	-0.2100		0.0000	1.0000
20	Uniform Force	Local x	-0.2100		0.0000	1.0000
21	Uniform Force	Local x	-0.2100		0.0000	1.0000
22	Uniform Force	Local x	-0.2100		0.0000	1.0000
23	Uniform Force	Local x	-0.2100		0.0000	1.0000
24	Uniform Force	Local x	-0.2100		0.0000	1.0000
25	Uniform Force	Local x	-0.2100		0.0000	1.0000
26	Uniform Force	Local x	-0.2100		0.0000	1.0000
27	Uniform Force	Local x	-0.2100		0.0000	1.0000
28	Uniform Force	Local x	-0.2100		0.0000	1.0000
29	Uniform Force	Local x	-0.2100		0.0000	1.0000
30	Uniform Force	Local x	-0.2100		0.0000	1.0000

LOAD CASE WS -45 deg, Member Loads

Member	Type	Direction	Magnitude at Start (kips or kips-ft)	Magnitude at End (kips or kips-ft)	Start Position (x/L)	End Position from start (x/L)
31	Uniform Force	Local x	-0.2100		0.0000	1.0000
32	Uniform Force	Local x	-0.2100		0.0000	1.0000
33	Uniform Force	Local x	-0.2100		0.0000	1.0000
34	Uniform Force	Local x	-0.2100		0.0000	1.0000
35	Uniform Force	Local x	-0.2100		0.0000	1.0000
36	Uniform Force	Local x	-0.2100		0.0000	1.0000
37	Uniform Force	Local x	-0.2100		0.0000	1.0000
38	Uniform Force	Local x	-0.2100		0.0000	1.0000
39	Uniform Force	Local x	-0.2100		0.0000	1.0000
40	Uniform Force	Local x	-0.2100		0.0000	1.0000
41	Uniform Force	Local x	-0.2100		0.0000	1.0000
42	Uniform Force	Local x	-0.2100		0.0000	1.0000
43	Uniform Force	Local x	-0.2100		0.0000	1.0000
44	Uniform Force	Local x	-0.2100		0.0000	1.0000
45	Uniform Force	Local x	-0.2100		0.0000	1.0000
46	Uniform Force	Local x	-0.2100		0.0000	1.0000
47	Uniform Force	Local x	-0.2100		0.0000	1.0000
48	Uniform Force	Local x	-0.2100		0.0000	1.0000
49	Uniform Force	Local x	-0.2100		0.0000	1.0000
50	Uniform Force	Local x	-0.2100		0.0000	1.0000
51	Uniform Force	Local x	-0.2100		0.0000	1.0000
52	Uniform Force	Local x	-0.2100		0.0000	1.0000
53	Uniform Force	Local x	-0.2100		0.0000	1.0000
54	Uniform Force	Local x	-0.2100		0.0000	1.0000
55	Uniform Force	Local x	-0.2100		0.0000	1.0000
56	Uniform Force	Local x	-0.2100		0.0000	1.0000
57	Uniform Force	Local x	-0.2100		0.0000	1.0000
101	Uniform Force	Local x	-0.0720		0.0000	1.0000
102	Uniform Force	Local x	-0.0720		0.0000	1.0000
103	Uniform Force	Local x	-0.0720		0.0000	1.0000
104	Uniform Force	Local x	-0.0720		0.0000	1.0000
105	Uniform Force	Local x	-0.0720		0.0000	1.0000
106	Uniform Force	Local x	-0.0720		0.0000	1.0000
107	Uniform Force	Local x	-0.0720		0.0000	1.0000

LOAD CASE WS -45 deg, Member Loads

Member	Type	Direction	Magnitude at Start (kips or kips-ft)	Magnitude at End (kips or kips-ft)	Start Position (x/L)	End Position from start (x/L)
108	Uniform Force	Local x	-0.0720		0.0000	1.0000
109	Uniform Force	Local x	-0.0720		0.0000	1.0000
110	Uniform Force	Local x	-0.0720		0.0000	1.0000
111	Uniform Force	Local x	-0.0720		0.0000	1.0000
112	Uniform Force	Local x	-0.0720		0.0000	1.0000
113	Uniform Force	Local x	-0.0720		0.0000	1.0000
114	Uniform Force	Local x	-0.0720		0.0000	1.0000
115	Uniform Force	Local x	-0.0720		0.0000	1.0000
116	Uniform Force	Local x	-0.0720		0.0000	1.0000
117	Uniform Force	Local x	-0.0720		0.0000	1.0000
118	Uniform Force	Local x	-0.0720		0.0000	1.0000
119	Uniform Force	Local x	-0.0720		0.0000	1.0000
120	Uniform Force	Local x	-0.0720		0.0000	1.0000
121	Uniform Force	Local x	-0.0720		0.0000	1.0000
122	Uniform Force	Local x	-0.0720		0.0000	1.0000
123	Uniform Force	Local x	-0.0720		0.0000	1.0000
124	Uniform Force	Local x	-0.0720		0.0000	1.0000
125	Uniform Force	Local x	-0.0720		0.0000	1.0000
126	Uniform Force	Local x	-0.0720		0.0000	1.0000
127	Uniform Force	Local x	-0.0720		0.0000	1.0000
128	Uniform Force	Local x	-0.0720		0.0000	1.0000
129	Uniform Force	Local x	-0.0720		0.0000	1.0000
130	Uniform Force	Local x	-0.0720		0.0000	1.0000
131	Uniform Force	Local x	-0.0720		0.0000	1.0000
132	Uniform Force	Local x	-0.0720		0.0000	1.0000
133	Uniform Force	Local x	-0.0720		0.0000	1.0000
134	Uniform Force	Local x	-0.0720		0.0000	1.0000
135	Uniform Force	Local x	-0.0720		0.0000	1.0000
136	Uniform Force	Local x	-0.0720		0.0000	1.0000
137	Uniform Force	Local x	-0.0720		0.0000	1.0000
138	Uniform Force	Local x	-0.0720		0.0000	1.0000
139	Uniform Force	Local x	-0.0720		0.0000	1.0000
140	Uniform Force	Local x	-0.0720		0.0000	1.0000
141	Uniform Force	Local x	-0.0720		0.0000	1.0000

LOAD CASE WS -45 deg, Member Loads

Member	Type	Direction	Magnitude at Start (kips or kips-ft)	Magnitude at End (kips or kips-ft)	Start Position (x/L)	End Position from start (x/L)
142	Uniform Force	Local x	-0.0720		0.0000	1.0000
143	Uniform Force	Local x	-0.0720		0.0000	1.0000
144	Uniform Force	Local x	-0.0720		0.0000	1.0000
145	Uniform Force	Local x	-0.0720		0.0000	1.0000
146	Uniform Force	Local x	-0.0720		0.0000	1.0000
147	Uniform Force	Local x	-0.0720		0.0000	1.0000
148	Uniform Force	Local x	-0.0720		0.0000	1.0000
149	Uniform Force	Local x	-0.0720		0.0000	1.0000
150	Uniform Force	Local x	-0.0720		0.0000	1.0000
151	Uniform Force	Local x	-0.0720		0.0000	1.0000
152	Uniform Force	Local x	-0.0720		0.0000	1.0000
153	Uniform Force	Local x	-0.0720		0.0000	1.0000
154	Uniform Force	Local x	-0.0720		0.0000	1.0000
155	Uniform Force	Local x	-0.0720		0.0000	1.0000
156	Uniform Force	Local x	-0.0720		0.0000	1.0000
157	Uniform Force	Local x	-0.0720		0.0000	1.0000
158	Uniform Force	Local x	-0.0720		0.0000	1.0000
159	Uniform Force	Local x	-0.0720		0.0000	1.0000
160	Uniform Force	Local x	-0.0720		0.0000	1.0000
701	Uniform Force	Global X	-0.0660		0.0000	1.0000
702	Uniform Force	Global X	-0.0660		0.0000	1.0000
703	Uniform Force	Global X	-0.0660		0.0000	1.0000
704	Uniform Force	Global X	-0.0660		0.0000	1.0000
705	Uniform Force	Global X	-0.0660		0.0000	1.0000
706	Uniform Force	Global X	-0.0660		0.0000	1.0000
707	Uniform Force	Global X	-0.0660		0.0000	1.0000
708	Uniform Force	Global X	-0.0660		0.0000	1.0000
709	Uniform Force	Global X	-0.0660		0.0000	1.0000
710	Uniform Force	Global X	-0.0660		0.0000	1.0000
711	Uniform Force	Global X	-0.0660		0.0000	1.0000
712	Uniform Force	Global X	-0.0660		0.0000	1.0000
713	Uniform Force	Global X	-0.0660		0.0000	1.0000
714	Uniform Force	Global X	-0.0660		0.0000	1.0000
715	Uniform Force	Global X	-0.0660		0.0000	1.0000

LOAD CASE WS -45 deg, Member Loads

Member	Type	Direction	Magnitude at Start (kips or kips-ft)	Magnitude at End (kips or kips-ft)	Start Position (x/L)	End Position from start (x/L)
716	Uniform Force	Global X	-0.0660		0.0000	1.0000
717	Uniform Force	Global X	-0.0660		0.0000	1.0000
718	Uniform Force	Global X	-0.0660		0.0000	1.0000
719	Uniform Force	Global X	-0.0660		0.0000	1.0000
720	Uniform Force	Global X	-0.0660		0.0000	1.0000
721	Uniform Force	Global X	-0.0660		0.0000	1.0000
722	Uniform Force	Global X	-0.0660		0.0000	1.0000
723	Uniform Force	Global X	-0.0660		0.0000	1.0000
724	Uniform Force	Global X	-0.0660		0.0000	1.0000
725	Uniform Force	Global X	-0.0660		0.0000	1.0000
726	Uniform Force	Global X	-0.0660		0.0000	1.0000
727	Uniform Force	Global X	-0.0660		0.0000	1.0000
728	Uniform Force	Global X	-0.0660		0.0000	1.0000
729	Uniform Force	Global X	-0.0660		0.0000	1.0000
730	Uniform Force	Global X	-0.0660		0.0000	1.0000
731	Uniform Force	Global X	-0.0660		0.0000	1.0000
732	Uniform Force	Global X	-0.0660		0.0000	1.0000
733	Uniform Force	Global X	-0.0660		0.0000	1.0000
740	Uniform Force	Global X	-0.0660		0.0000	1.0000
741	Uniform Force	Global X	-0.0660		0.0000	1.0000
742	Uniform Force	Global X	-0.0660		0.0000	1.0000
743	Uniform Force	Global X	-0.0660		0.0000	1.0000
744	Uniform Force	Global X	-0.0660		0.0000	1.0000
745	Uniform Force	Global X	-0.0660		0.0000	1.0000
746	Uniform Force	Global X	-0.0660		0.0000	1.0000
747	Uniform Force	Global X	-0.0660		0.0000	1.0000
748	Uniform Force	Global X	-0.0660		0.0000	1.0000
749	Uniform Force	Global X	-0.0660		0.0000	1.0000
750	Uniform Force	Global X	-0.0660		0.0000	1.0000
751	Uniform Force	Global X	-0.0660		0.0000	1.0000
752	Uniform Force	Global X	-0.0660		0.0000	1.0000
753	Uniform Force	Global X	-0.0660		0.0000	1.0000
754	Uniform Force	Global X	-0.0660		0.0000	1.0000
755	Uniform Force	Global X	-0.0660		0.0000	1.0000

LOAD CASE WS -45 deg, Member Loads

Member	Type	Direction	Magnitude at Start (kips or kips-ft)	Magnitude at End (kips or kips-ft)	Start Position (x/L)	End Position from start (x/L)
756	Uniform Force	Global X	-0.0660		0.0000	1.0000
757	Uniform Force	Global X	-0.0660		0.0000	1.0000
758	Uniform Force	Global X	-0.0660		0.0000	1.0000
759	Uniform Force	Global X	-0.0660		0.0000	1.0000
760	Uniform Force	Global X	-0.0660		0.0000	1.0000
761	Uniform Force	Global X	-0.0660		0.0000	1.0000
762	Uniform Force	Global X	-0.0660		0.0000	1.0000
763	Uniform Force	Global X	-0.0660		0.0000	1.0000
764	Uniform Force	Global X	-0.0660		0.0000	1.0000
765	Uniform Force	Global X	-0.0660		0.0000	1.0000
766	Uniform Force	Global X	-0.0660		0.0000	1.0000
767	Uniform Force	Global X	-0.0660		0.0000	1.0000
768	Uniform Force	Global X	-0.0660		0.0000	1.0000
769	Uniform Force	Global X	-0.0660		0.0000	1.0000
770	Uniform Force	Global X	-0.0660		0.0000	1.0000
771	Uniform Force	Global X	-0.0660		0.0000	1.0000
772	Uniform Force	Global X	-0.0660		0.0000	1.0000
2002	Uniform Force	Global Y	0.2800		0.0000	1.0000
2003	Uniform Force	Global Y	0.2800		0.0000	1.0000
2002	Trapezoidal Force	Global X	-0.8600	-0.6600	0.0000	1.0000
2003	Trapezoidal Force	Global X	-0.6600	-0.4700	0.0000	1.0000
1017	Uniform Force	Global Y	0.2350		0.0000	1.0000
1018	Uniform Force	Global Y	0.2350		0.0000	1.0000
1019	Uniform Force	Global Y	0.2350		0.0000	1.0000
1017	Uniform Force	Global X	-0.0940		0.0000	1.0000
1018	Uniform Force	Global X	-0.0940		0.0000	1.0000
1019	Uniform Force	Global X	-0.0940		0.0000	1.0000
1013	Uniform Force	Global Y	0.2350		0.0000	1.0000
1014	Uniform Force	Global Y	0.2350		0.0000	1.0000
1015	Uniform Force	Global Y	0.2350		0.0000	1.0000
1013	Uniform Force	Global X	-0.0940		0.0000	1.0000
1014	Uniform Force	Global X	-0.0940		0.0000	1.0000
1015	Uniform Force	Global X	-0.0940		0.0000	1.0000
3017	Uniform Force	Global Y	0.2350		0.0000	1.0000

LOAD CASE WS -45 deg, Member Loads

Member	Type	Direction	Magnitude at Start (kips or kips-ft)	Magnitude at End (kips or kips-ft)	Start Position (x/L)	End Position from start (x/L)
3018	Uniform Force	Global Y	0.2350		0.0000	1.0000
3019	Uniform Force	Global Y	0.2350		0.0000	1.0000
3017	Uniform Force	Global X	-0.0940		0.0000	1.0000
3018	Uniform Force	Global X	-0.0940		0.0000	1.0000
3019	Uniform Force	Global X	-0.0940		0.0000	1.0000
3013	Uniform Force	Global Y	0.2350		0.0000	1.0000
3014	Uniform Force	Global Y	0.2350		0.0000	1.0000
3015	Uniform Force	Global Y	0.2350		0.0000	1.0000
3013	Uniform Force	Global X	-0.0940		0.0000	1.0000
3014	Uniform Force	Global X	-0.0940		0.0000	1.0000
3015	Uniform Force	Global X	-0.0940		0.0000	1.0000
1006	Uniform Force	Global X	-0.2350		0.0000	1.0000
1007	Uniform Force	Global X	-0.2350		0.0000	1.0000
1008	Uniform Force	Global X	-0.2350		0.0000	1.0000
1009	Uniform Force	Global X	-0.2350		0.0000	1.0000
1010	Uniform Force	Global X	-0.2350		0.0000	1.0000
1011	Uniform Force	Global X	-0.2350		0.0000	1.0000
1012	Uniform Force	Global X	-0.2350		0.0000	1.0000
3006	Uniform Force	Global X	-0.2350		0.0000	1.0000
3007	Uniform Force	Global X	-0.2350		0.0000	1.0000
3008	Uniform Force	Global X	-0.2350		0.0000	1.0000
3009	Uniform Force	Global X	-0.2350		0.0000	1.0000
3010	Uniform Force	Global X	-0.2350		0.0000	1.0000
3011	Uniform Force	Global X	-0.2350		0.0000	1.0000
3012	Uniform Force	Global X	-0.2350		0.0000	1.0000
501	Uniform Force	Global Y	0.0690		0.0000	1.0000
502	Uniform Force	Global Y	0.0690		0.0000	1.0000
503	Uniform Force	Global Y	0.0690		0.0000	1.0000
504	Uniform Force	Global Y	0.0690		0.0000	1.0000
505	Uniform Force	Global Y	0.0690		0.0000	1.0000
601	Uniform Force	Global Y	0.0690		0.0000	1.0000
602	Uniform Force	Global Y	0.0690		0.0000	1.0000
603	Uniform Force	Global Y	0.0690		0.0000	1.0000
604	Uniform Force	Global Y	0.0690		0.0000	1.0000

LOAD CASE WS -45 deg, Member Loads

Member	Type	Direction	Magnitude at Start (kips or kips-ft)	Magnitude at End (kips or kips-ft)	Start Position (x/L)	End Position from start (x/L)
605	Uniform Force	Global Y	0.0690		0.0000	1.0000
401	Uniform Force	Global Y	0.2800		0.0000	1.0000
402	Uniform Force	Global Y	0.2800		0.0000	1.0000
403	Uniform Force	Global Y	0.2800		0.0000	1.0000
405	Trapezoidal Force	Global Y	0.3600	0.3400	0.0000	1.0000
406	Trapezoidal Force	Global Y	0.3400	0.3300	0.0000	1.0000
407	Trapezoidal Force	Global Y	0.3300	0.3200	0.0000	1.0000
408	Trapezoidal Force	Global Y	0.3200	0.2900	0.0000	1.0000
409	Trapezoidal Force	Global Y	0.2900	0.2800	0.0000	1.0000
410	Trapezoidal Force	Global Y	0.2800	0.2600	0.0000	1.0000
411	Trapezoidal Force	Global Y	0.2600	0.2500	0.0000	1.0000
412	Trapezoidal Force	Global Y	0.2500	0.2400	0.0000	1.0000
413	Trapezoidal Force	Global Y	0.2400	0.2300	0.0000	1.0000
501	Uniform Force	Global X	-0.0690		0.0000	1.0000
502	Uniform Force	Global X	-0.0690		0.0000	1.0000
503	Uniform Force	Global X	-0.0690		0.0000	1.0000
504	Uniform Force	Global X	-0.0690		0.0000	1.0000
505	Uniform Force	Global X	-0.0690		0.0000	1.0000
601	Uniform Force	Global X	-0.0690		0.0000	1.0000
602	Uniform Force	Global X	-0.0690		0.0000	1.0000
603	Uniform Force	Global X	-0.0690		0.0000	1.0000
604	Uniform Force	Global X	-0.0690		0.0000	1.0000
605	Uniform Force	Global X	-0.0690		0.0000	1.0000
401	Uniform Force	Global X	-0.2350		0.0000	1.0000
402	Uniform Force	Global X	-0.2350		0.0000	1.0000
403	Uniform Force	Global X	-0.2350		0.0000	1.0000
405	Trapezoidal Force	Global X	-0.3600	-0.3400	0.0000	1.0000
406	Trapezoidal Force	Global X	-0.3400	-0.3300	0.0000	1.0000
407	Trapezoidal Force	Global X	-0.3300	-0.3200	0.0000	1.0000
408	Trapezoidal Force	Global X	-0.3200	-0.2900	0.0000	1.0000
409	Trapezoidal Force	Global X	-0.2900	-0.2800	0.0000	1.0000
410	Trapezoidal Force	Global X	-0.2800	-0.2600	0.0000	1.0000
411	Trapezoidal Force	Global X	-0.2600	-0.2500	0.0000	1.0000
412	Trapezoidal Force	Global X	-0.2500	-0.2400	0.0000	1.0000

LOAD CASE WS -45 deg, Member Loads

Member	Type	Direction	Magnitude at Start (kips or kips-ft)	Magnitude at End (kips or kips-ft)	Start Position (x/L)	End Position from start (x/L)
413	Trapezoidal Force	Global X	-0.2400	-0.2300	0.0000	1.0000

LOAD CASE WS_-30 deg, Member Loads

Member	Type	Direction	Magnitude at Start (kips or kips-ft)	Magnitude at End (kips or kips-ft)	Start Position (x/L)	End Position from start (x/L)
1	Uniform Force	Global Y	0.3310		0.0000	1.0000
2	Uniform Force	Global Y	0.3310		0.0000	1.0000
3	Uniform Force	Global Y	0.3310		0.0000	1.0000
4	Uniform Force	Global Y	0.3310		0.0000	1.0000
5	Uniform Force	Global Y	0.3310		0.0000	1.0000
6	Uniform Force	Global Y	0.3310		0.0000	1.0000
7	Uniform Force	Global Y	0.3310		0.0000	1.0000
8	Uniform Force	Global Y	0.3310		0.0000	1.0000
9	Uniform Force	Global Y	0.3310		0.0000	1.0000
10	Uniform Force	Global Y	0.3310		0.0000	1.0000
11	Uniform Force	Global Y	0.3310		0.0000	1.0000
12	Uniform Force	Global Y	0.3310		0.0000	1.0000
13	Uniform Force	Global Y	0.3310		0.0000	1.0000
14	Uniform Force	Global Y	0.3310		0.0000	1.0000
15	Uniform Force	Global Y	0.3310		0.0000	1.0000
16	Uniform Force	Global Y	0.3310		0.0000	1.0000
17	Uniform Force	Global Y	0.3310		0.0000	1.0000
18	Uniform Force	Global Y	0.3310		0.0000	1.0000
19	Uniform Force	Global Y	0.3310		0.0000	1.0000
20	Uniform Force	Global Y	0.3310		0.0000	1.0000
21	Uniform Force	Global Y	0.3310		0.0000	1.0000
22	Uniform Force	Global Y	0.3310		0.0000	1.0000
23	Uniform Force	Global Y	0.3310		0.0000	1.0000
24	Uniform Force	Global Y	0.3310		0.0000	1.0000
25	Uniform Force	Global Y	0.3310		0.0000	1.0000
26	Uniform Force	Global Y	0.3310		0.0000	1.0000
27	Uniform Force	Global Y	0.3310		0.0000	1.0000
28	Uniform Force	Global Y	0.3310		0.0000	1.0000

LOAD CASE WS -30 deg, Member Loads

Member	Type	Direction	Magnitude at Start (kips or kips-ft)	Magnitude at End (kips or kips-ft)	Start Position (x/L)	End Position from start (x/L)
29	Uniform Force	Global Y	0.3310		0.0000	1.0000
30	Uniform Force	Global Y	0.3310		0.0000	1.0000
31	Uniform Force	Global Y	0.3310		0.0000	1.0000
32	Uniform Force	Global Y	0.3310		0.0000	1.0000
33	Uniform Force	Global Y	0.3310		0.0000	1.0000
34	Uniform Force	Global Y	0.3310		0.0000	1.0000
35	Uniform Force	Global Y	0.3310		0.0000	1.0000
36	Uniform Force	Global Y	0.3310		0.0000	1.0000
37	Uniform Force	Global Y	0.3310		0.0000	1.0000
38	Uniform Force	Global Y	0.3310		0.0000	1.0000
39	Uniform Force	Global Y	0.3310		0.0000	1.0000
40	Uniform Force	Global Y	0.3310		0.0000	1.0000
41	Uniform Force	Global Y	0.3310		0.0000	1.0000
42	Uniform Force	Global Y	0.3310		0.0000	1.0000
43	Uniform Force	Global Y	0.3310		0.0000	1.0000
44	Uniform Force	Global Y	0.3310		0.0000	1.0000
45	Uniform Force	Global Y	0.3310		0.0000	1.0000
46	Uniform Force	Global Y	0.3310		0.0000	1.0000
47	Uniform Force	Global Y	0.3310		0.0000	1.0000
48	Uniform Force	Global Y	0.3310		0.0000	1.0000
49	Uniform Force	Global Y	0.3310		0.0000	1.0000
50	Uniform Force	Global Y	0.3310		0.0000	1.0000
51	Uniform Force	Global Y	0.3310		0.0000	1.0000
52	Uniform Force	Global Y	0.3310		0.0000	1.0000
53	Uniform Force	Global Y	0.3310		0.0000	1.0000
54	Uniform Force	Global Y	0.3310		0.0000	1.0000
55	Uniform Force	Global Y	0.3310		0.0000	1.0000
56	Uniform Force	Global Y	0.3310		0.0000	1.0000
57	Uniform Force	Global Y	0.3310		0.0000	1.0000
101	Uniform Force	Global Y	0.1130		0.0000	1.0000
102	Uniform Force	Global Y	0.1130		0.0000	1.0000
103	Uniform Force	Global Y	0.1130		0.0000	1.0000
104	Uniform Force	Global Y	0.1130		0.0000	1.0000
105	Uniform Force	Global Y	0.1130		0.0000	1.0000

LOAD CASE WS -30 deg, Member Loads

Member	Type	Direction	Magnitude at Start (kips or kips-ft)	Magnitude at End (kips or kips-ft)	Start Position (x/L)	End Position from start (x/L)
106	Uniform Force	Global Y	0.1130		0.0000	1.0000
107	Uniform Force	Global Y	0.1130		0.0000	1.0000
108	Uniform Force	Global Y	0.1130		0.0000	1.0000
109	Uniform Force	Global Y	0.1130		0.0000	1.0000
110	Uniform Force	Global Y	0.1130		0.0000	1.0000
111	Uniform Force	Global Y	0.1130		0.0000	1.0000
112	Uniform Force	Global Y	0.1130		0.0000	1.0000
113	Uniform Force	Global Y	0.1130		0.0000	1.0000
114	Uniform Force	Global Y	0.1130		0.0000	1.0000
115	Uniform Force	Global Y	0.1130		0.0000	1.0000
116	Uniform Force	Global Y	0.1130		0.0000	1.0000
117	Uniform Force	Global Y	0.1130		0.0000	1.0000
118	Uniform Force	Global Y	0.1130		0.0000	1.0000
119	Uniform Force	Global Y	0.1130		0.0000	1.0000
120	Uniform Force	Global Y	0.1130		0.0000	1.0000
121	Uniform Force	Global Y	0.1130		0.0000	1.0000
122	Uniform Force	Global Y	0.1130		0.0000	1.0000
123	Uniform Force	Global Y	0.1130		0.0000	1.0000
124	Uniform Force	Global Y	0.1130		0.0000	1.0000
125	Uniform Force	Global Y	0.1130		0.0000	1.0000
126	Uniform Force	Global Y	0.1130		0.0000	1.0000
127	Uniform Force	Global Y	0.1130		0.0000	1.0000
128	Uniform Force	Global Y	0.1130		0.0000	1.0000
129	Uniform Force	Global Y	0.1130		0.0000	1.0000
130	Uniform Force	Global Y	0.1130		0.0000	1.0000
131	Uniform Force	Global Y	0.1130		0.0000	1.0000
132	Uniform Force	Global Y	0.1130		0.0000	1.0000
133	Uniform Force	Global Y	0.1130		0.0000	1.0000
134	Uniform Force	Global Y	0.1130		0.0000	1.0000
135	Uniform Force	Global Y	0.1130		0.0000	1.0000
136	Uniform Force	Global Y	0.1130		0.0000	1.0000
137	Uniform Force	Global Y	0.1130		0.0000	1.0000
138	Uniform Force	Global Y	0.1130		0.0000	1.0000
139	Uniform Force	Global Y	0.1130		0.0000	1.0000

LOAD CASE WS -30 deg, Member Loads

Member	Type	Direction	Magnitude at Start (kips or kips-ft)	Magnitude at End (kips or kips-ft)	Start Position (x/L)	End Position from start (x/L)
140	Uniform Force	Global Y	0.1130		0.0000	1.0000
141	Uniform Force	Global Y	0.1130		0.0000	1.0000
142	Uniform Force	Global Y	0.1130		0.0000	1.0000
143	Uniform Force	Global Y	0.1130		0.0000	1.0000
144	Uniform Force	Global Y	0.1130		0.0000	1.0000
145	Uniform Force	Global Y	0.1130		0.0000	1.0000
146	Uniform Force	Global Y	0.1130		0.0000	1.0000
147	Uniform Force	Global Y	0.1130		0.0000	1.0000
148	Uniform Force	Global Y	0.1130		0.0000	1.0000
149	Uniform Force	Global Y	0.1130		0.0000	1.0000
150	Uniform Force	Global Y	0.1130		0.0000	1.0000
151	Uniform Force	Global Y	0.1130		0.0000	1.0000
152	Uniform Force	Global Y	0.1130		0.0000	1.0000
153	Uniform Force	Global Y	0.1130		0.0000	1.0000
154	Uniform Force	Global Y	0.1130		0.0000	1.0000
155	Uniform Force	Global Y	0.1130		0.0000	1.0000
156	Uniform Force	Global Y	0.1130		0.0000	1.0000
157	Uniform Force	Global Y	0.1130		0.0000	1.0000
158	Uniform Force	Global Y	0.1130		0.0000	1.0000
159	Uniform Force	Global Y	0.1130		0.0000	1.0000
160	Uniform Force	Global Y	0.1130		0.0000	1.0000
701	Uniform Force	Global Y	0.1040		0.0000	1.0000
702	Uniform Force	Global Y	0.1040		0.0000	1.0000
703	Uniform Force	Global Y	0.1040		0.0000	1.0000
704	Uniform Force	Global Y	0.1040		0.0000	1.0000
705	Uniform Force	Global Y	0.1040		0.0000	1.0000
706	Uniform Force	Global Y	0.1040		0.0000	1.0000
707	Uniform Force	Global Y	0.1040		0.0000	1.0000
708	Uniform Force	Global Y	0.1040		0.0000	1.0000
709	Uniform Force	Global Y	0.1040		0.0000	1.0000
710	Uniform Force	Global Y	0.1040		0.0000	1.0000
711	Uniform Force	Global Y	0.1040		0.0000	1.0000
712	Uniform Force	Global Y	0.1040		0.0000	1.0000
713	Uniform Force	Global Y	0.1040		0.0000	1.0000

LOAD CASE WS -30 deg, Member Loads

Member	Type	Direction	Magnitude at Start (kips or kips-ft)	Magnitude at End (kips or kips-ft)	Start Position (x/L)	End Position from start (x/L)
714	Uniform Force	Global Y	0.1040		0.0000	1.0000
715	Uniform Force	Global Y	0.1040		0.0000	1.0000
716	Uniform Force	Global Y	0.1040		0.0000	1.0000
717	Uniform Force	Global Y	0.1040		0.0000	1.0000
718	Uniform Force	Global Y	0.1040		0.0000	1.0000
719	Uniform Force	Global Y	0.1040		0.0000	1.0000
720	Uniform Force	Global Y	0.1040		0.0000	1.0000
721	Uniform Force	Global Y	0.1040		0.0000	1.0000
722	Uniform Force	Global Y	0.1040		0.0000	1.0000
723	Uniform Force	Global Y	0.1040		0.0000	1.0000
724	Uniform Force	Global Y	0.1040		0.0000	1.0000
725	Uniform Force	Global Y	0.1040		0.0000	1.0000
726	Uniform Force	Global Y	0.1040		0.0000	1.0000
727	Uniform Force	Global Y	0.1040		0.0000	1.0000
728	Uniform Force	Global Y	0.1040		0.0000	1.0000
729	Uniform Force	Global Y	0.1040		0.0000	1.0000
730	Uniform Force	Global Y	0.1040		0.0000	1.0000
731	Uniform Force	Global Y	0.1040		0.0000	1.0000
732	Uniform Force	Global Y	0.1040		0.0000	1.0000
733	Uniform Force	Global Y	0.1040		0.0000	1.0000
740	Uniform Force	Global Y	0.1040		0.0000	1.0000
741	Uniform Force	Global Y	0.1040		0.0000	1.0000
742	Uniform Force	Global Y	0.1040		0.0000	1.0000
743	Uniform Force	Global Y	0.1040		0.0000	1.0000
744	Uniform Force	Global Y	0.1040		0.0000	1.0000
745	Uniform Force	Global Y	0.1040		0.0000	1.0000
746	Uniform Force	Global Y	0.1040		0.0000	1.0000
747	Uniform Force	Global Y	0.1040		0.0000	1.0000
748	Uniform Force	Global Y	0.1040		0.0000	1.0000
749	Uniform Force	Global Y	0.1040		0.0000	1.0000
750	Uniform Force	Global Y	0.1040		0.0000	1.0000
751	Uniform Force	Global Y	0.1040		0.0000	1.0000
752	Uniform Force	Global Y	0.1040		0.0000	1.0000
753	Uniform Force	Global Y	0.1040		0.0000	1.0000

LOAD CASE WS -30 deg, Member Loads

Member	Type	Direction	Magnitude at Start (kips or kips-ft)	Magnitude at End (kips or kips-ft)	Start Position (x/L)	End Position from start (x/L)
754	Uniform Force	Global Y	0.1040		0.0000	1.0000
755	Uniform Force	Global Y	0.1040		0.0000	1.0000
756	Uniform Force	Global Y	0.1040		0.0000	1.0000
757	Uniform Force	Global Y	0.1040		0.0000	1.0000
758	Uniform Force	Global Y	0.1040		0.0000	1.0000
759	Uniform Force	Global Y	0.1040		0.0000	1.0000
760	Uniform Force	Global Y	0.1040		0.0000	1.0000
761	Uniform Force	Global Y	0.1040		0.0000	1.0000
762	Uniform Force	Global Y	0.1040		0.0000	1.0000
763	Uniform Force	Global Y	0.1040		0.0000	1.0000
764	Uniform Force	Global Y	0.1040		0.0000	1.0000
765	Uniform Force	Global Y	0.1040		0.0000	1.0000
766	Uniform Force	Global Y	0.1040		0.0000	1.0000
767	Uniform Force	Global Y	0.1040		0.0000	1.0000
768	Uniform Force	Global Y	0.1040		0.0000	1.0000
769	Uniform Force	Global Y	0.1040		0.0000	1.0000
770	Uniform Force	Global Y	0.1040		0.0000	1.0000
771	Uniform Force	Global Y	0.1040		0.0000	1.0000
772	Uniform Force	Global Y	0.1040		0.0000	1.0000
1	Uniform Moment	Local x	-0.8400		0.0000	1.0000
2	Uniform Moment	Local x	-0.8400		0.0000	1.0000
3	Uniform Moment	Local x	-0.8400		0.0000	1.0000
4	Uniform Moment	Local x	-0.8400		0.0000	1.0000
5	Uniform Moment	Local x	-0.8400		0.0000	1.0000
6	Uniform Moment	Local x	-0.8400		0.0000	1.0000
7	Uniform Moment	Local x	-0.8400		0.0000	1.0000
8	Uniform Moment	Local x	-0.8400		0.0000	1.0000
9	Uniform Moment	Local x	-0.8400		0.0000	1.0000
10	Uniform Moment	Local x	-0.8400		0.0000	1.0000
11	Uniform Moment	Local x	-0.8400		0.0000	1.0000
12	Uniform Moment	Local x	-0.8400		0.0000	1.0000
13	Uniform Moment	Local x	-0.8400		0.0000	1.0000
14	Uniform Moment	Local x	-0.8400		0.0000	1.0000
15	Uniform Moment	Local x	-0.8400		0.0000	1.0000

LOAD CASE WS -30 deg, Member Loads

Member	Type	Direction	Magnitude at Start (kips or kips-ft)	Magnitude at End (kips or kips-ft)	Start Position (x/L)	End Position from start (x/L)
16	Uniform Moment	Local x	-0.8400		0.0000	1.0000
17	Uniform Moment	Local x	-0.8400		0.0000	1.0000
18	Uniform Moment	Local x	-0.8400		0.0000	1.0000
19	Uniform Moment	Local x	-0.8400		0.0000	1.0000
20	Uniform Moment	Local x	-0.8400		0.0000	1.0000
21	Uniform Moment	Local x	-0.8400		0.0000	1.0000
22	Uniform Moment	Local x	-0.8400		0.0000	1.0000
23	Uniform Moment	Local x	-0.8400		0.0000	1.0000
24	Uniform Moment	Local x	-0.8400		0.0000	1.0000
25	Uniform Moment	Local x	-0.8400		0.0000	1.0000
26	Uniform Moment	Local x	-0.8400		0.0000	1.0000
27	Uniform Moment	Local x	-0.8400		0.0000	1.0000
28	Uniform Moment	Local x	-0.8400		0.0000	1.0000
29	Uniform Moment	Local x	-0.8400		0.0000	1.0000
30	Uniform Moment	Local x	-0.8400		0.0000	1.0000
31	Uniform Moment	Local x	-0.8400		0.0000	1.0000
32	Uniform Moment	Local x	-0.8400		0.0000	1.0000
33	Uniform Moment	Local x	-0.8400		0.0000	1.0000
34	Uniform Moment	Local x	-0.8400		0.0000	1.0000
35	Uniform Moment	Local x	-0.8400		0.0000	1.0000
36	Uniform Moment	Local x	-0.8400		0.0000	1.0000
37	Uniform Moment	Local x	-0.8400		0.0000	1.0000
38	Uniform Moment	Local x	-0.8400		0.0000	1.0000
39	Uniform Moment	Local x	-0.8400		0.0000	1.0000
40	Uniform Moment	Local x	-0.8400		0.0000	1.0000
41	Uniform Moment	Local x	-0.8400		0.0000	1.0000
42	Uniform Moment	Local x	-0.8400		0.0000	1.0000
43	Uniform Moment	Local x	-0.8400		0.0000	1.0000
44	Uniform Moment	Local x	-0.8400		0.0000	1.0000
45	Uniform Moment	Local x	-0.8400		0.0000	1.0000
46	Uniform Moment	Local x	-0.8400		0.0000	1.0000
47	Uniform Moment	Local x	-0.8400		0.0000	1.0000
48	Uniform Moment	Local x	-0.8400		0.0000	1.0000
49	Uniform Moment	Local x	-0.8400		0.0000	1.0000

LOAD CASE WS -30 deg, Member Loads

Member	Type	Direction	Magnitude at Start (kips or kips-ft)	Magnitude at End (kips or kips-ft)	Start Position (x/L)	End Position from start (x/L)
50	Uniform Moment	Local x	-0.8400		0.0000	1.0000
51	Uniform Moment	Local x	-0.8400		0.0000	1.0000
52	Uniform Moment	Local x	-0.8400		0.0000	1.0000
53	Uniform Moment	Local x	-0.8400		0.0000	1.0000
54	Uniform Moment	Local x	-0.8400		0.0000	1.0000
55	Uniform Moment	Local x	-0.8400		0.0000	1.0000
56	Uniform Moment	Local x	-0.8400		0.0000	1.0000
57	Uniform Moment	Local x	-0.8400		0.0000	1.0000
1	Uniform Force	Local x	-0.1400		0.0000	1.0000
2	Uniform Force	Local x	-0.1400		0.0000	1.0000
3	Uniform Force	Local x	-0.1400		0.0000	1.0000
4	Uniform Force	Local x	-0.1400		0.0000	1.0000
5	Uniform Force	Local x	-0.1400		0.0000	1.0000
6	Uniform Force	Local x	-0.1400		0.0000	1.0000
7	Uniform Force	Local x	-0.1400		0.0000	1.0000
8	Uniform Force	Local x	-0.1400		0.0000	1.0000
9	Uniform Force	Local x	-0.1400		0.0000	1.0000
10	Uniform Force	Local x	-0.1400		0.0000	1.0000
11	Uniform Force	Local x	-0.1400		0.0000	1.0000
12	Uniform Force	Local x	-0.1400		0.0000	1.0000
13	Uniform Force	Local x	-0.1400		0.0000	1.0000
14	Uniform Force	Local x	-0.1400		0.0000	1.0000
15	Uniform Force	Local x	-0.1400		0.0000	1.0000
16	Uniform Force	Local x	-0.1400		0.0000	1.0000
17	Uniform Force	Local x	-0.1400		0.0000	1.0000
18	Uniform Force	Local x	-0.1400		0.0000	1.0000
19	Uniform Force	Local x	-0.1400		0.0000	1.0000
20	Uniform Force	Local x	-0.1400		0.0000	1.0000
21	Uniform Force	Local x	-0.1400		0.0000	1.0000
22	Uniform Force	Local x	-0.1400		0.0000	1.0000
23	Uniform Force	Local x	-0.1400		0.0000	1.0000
24	Uniform Force	Local x	-0.1400		0.0000	1.0000
25	Uniform Force	Local x	-0.1400		0.0000	1.0000
26	Uniform Force	Local x	-0.1400		0.0000	1.0000

LOAD CASE WS -30 deg, Member Loads

Member	Type	Direction	Magnitude at Start (kips or kips-ft)	Magnitude at End (kips or kips-ft)	Start Position (x/L)	End Position from start (x/L)
27	Uniform Force	Local x	-0.1400		0.0000	1.0000
28	Uniform Force	Local x	-0.1400		0.0000	1.0000
29	Uniform Force	Local x	-0.1400		0.0000	1.0000
30	Uniform Force	Local x	-0.1400		0.0000	1.0000
31	Uniform Force	Local x	-0.1400		0.0000	1.0000
32	Uniform Force	Local x	-0.1400		0.0000	1.0000
33	Uniform Force	Local x	-0.1400		0.0000	1.0000
34	Uniform Force	Local x	-0.1400		0.0000	1.0000
35	Uniform Force	Local x	-0.1400		0.0000	1.0000
36	Uniform Force	Local x	-0.1400		0.0000	1.0000
37	Uniform Force	Local x	-0.1400		0.0000	1.0000
38	Uniform Force	Local x	-0.1400		0.0000	1.0000
39	Uniform Force	Local x	-0.1400		0.0000	1.0000
40	Uniform Force	Local x	-0.1400		0.0000	1.0000
41	Uniform Force	Local x	-0.1400		0.0000	1.0000
42	Uniform Force	Local x	-0.1400		0.0000	1.0000
43	Uniform Force	Local x	-0.1400		0.0000	1.0000
44	Uniform Force	Local x	-0.1400		0.0000	1.0000
45	Uniform Force	Local x	-0.1400		0.0000	1.0000
46	Uniform Force	Local x	-0.1400		0.0000	1.0000
47	Uniform Force	Local x	-0.1400		0.0000	1.0000
48	Uniform Force	Local x	-0.1400		0.0000	1.0000
49	Uniform Force	Local x	-0.1400		0.0000	1.0000
50	Uniform Force	Local x	-0.1400		0.0000	1.0000
51	Uniform Force	Local x	-0.1400		0.0000	1.0000
52	Uniform Force	Local x	-0.1400		0.0000	1.0000
53	Uniform Force	Local x	-0.1400		0.0000	1.0000
54	Uniform Force	Local x	-0.1400		0.0000	1.0000
55	Uniform Force	Local x	-0.1400		0.0000	1.0000
56	Uniform Force	Local x	-0.1400		0.0000	1.0000
57	Uniform Force	Local x	-0.1400		0.0000	1.0000
101	Uniform Force	Local x	-0.0480		0.0000	1.0000
102	Uniform Force	Local x	-0.0480		0.0000	1.0000
103	Uniform Force	Local x	-0.0480		0.0000	1.0000

LOAD CASE WS -30 deg, Member Loads

Member	Type	Direction	Magnitude at Start (kips or kips-ft)	Magnitude at End (kips or kips-ft)	Start Position (x/L)	End Position from start (x/L)
104	Uniform Force	Local x	-0.0480		0.0000	1.0000
105	Uniform Force	Local x	-0.0480		0.0000	1.0000
106	Uniform Force	Local x	-0.0480		0.0000	1.0000
107	Uniform Force	Local x	-0.0480		0.0000	1.0000
108	Uniform Force	Local x	-0.0480		0.0000	1.0000
109	Uniform Force	Local x	-0.0480		0.0000	1.0000
110	Uniform Force	Local x	-0.0480		0.0000	1.0000
111	Uniform Force	Local x	-0.0480		0.0000	1.0000
112	Uniform Force	Local x	-0.0480		0.0000	1.0000
113	Uniform Force	Local x	-0.0480		0.0000	1.0000
114	Uniform Force	Local x	-0.0480		0.0000	1.0000
115	Uniform Force	Local x	-0.0480		0.0000	1.0000
116	Uniform Force	Local x	-0.0480		0.0000	1.0000
117	Uniform Force	Local x	-0.0480		0.0000	1.0000
118	Uniform Force	Local x	-0.0480		0.0000	1.0000
119	Uniform Force	Local x	-0.0480		0.0000	1.0000
120	Uniform Force	Local x	-0.0480		0.0000	1.0000
121	Uniform Force	Local x	-0.0480		0.0000	1.0000
122	Uniform Force	Local x	-0.0480		0.0000	1.0000
123	Uniform Force	Local x	-0.0480		0.0000	1.0000
124	Uniform Force	Local x	-0.0480		0.0000	1.0000
125	Uniform Force	Local x	-0.0480		0.0000	1.0000
126	Uniform Force	Local x	-0.0480		0.0000	1.0000
127	Uniform Force	Local x	-0.0480		0.0000	1.0000
128	Uniform Force	Local x	-0.0480		0.0000	1.0000
129	Uniform Force	Local x	-0.0480		0.0000	1.0000
130	Uniform Force	Local x	-0.0480		0.0000	1.0000
131	Uniform Force	Local x	-0.0480		0.0000	1.0000
132	Uniform Force	Local x	-0.0480		0.0000	1.0000
133	Uniform Force	Local x	-0.0480		0.0000	1.0000
134	Uniform Force	Local x	-0.0480		0.0000	1.0000
135	Uniform Force	Local x	-0.0480		0.0000	1.0000
136	Uniform Force	Local x	-0.0480		0.0000	1.0000
137	Uniform Force	Local x	-0.0480		0.0000	1.0000

LOAD CASE WS -30 deg, Member Loads

Member	Type	Direction	Magnitude at Start (kips or kips-ft)	Magnitude at End (kips or kips-ft)	Start Position (x/L)	End Position from start (x/L)
138	Uniform Force	Local x	-0.0480		0.0000	1.0000
139	Uniform Force	Local x	-0.0480		0.0000	1.0000
140	Uniform Force	Local x	-0.0480		0.0000	1.0000
141	Uniform Force	Local x	-0.0480		0.0000	1.0000
142	Uniform Force	Local x	-0.0480		0.0000	1.0000
143	Uniform Force	Local x	-0.0480		0.0000	1.0000
144	Uniform Force	Local x	-0.0480		0.0000	1.0000
145	Uniform Force	Local x	-0.0480		0.0000	1.0000
146	Uniform Force	Local x	-0.0480		0.0000	1.0000
147	Uniform Force	Local x	-0.0480		0.0000	1.0000
148	Uniform Force	Local x	-0.0480		0.0000	1.0000
149	Uniform Force	Local x	-0.0480		0.0000	1.0000
150	Uniform Force	Local x	-0.0480		0.0000	1.0000
151	Uniform Force	Local x	-0.0480		0.0000	1.0000
152	Uniform Force	Local x	-0.0480		0.0000	1.0000
153	Uniform Force	Local x	-0.0480		0.0000	1.0000
154	Uniform Force	Local x	-0.0480		0.0000	1.0000
155	Uniform Force	Local x	-0.0480		0.0000	1.0000
156	Uniform Force	Local x	-0.0480		0.0000	1.0000
157	Uniform Force	Local x	-0.0480		0.0000	1.0000
158	Uniform Force	Local x	-0.0480		0.0000	1.0000
159	Uniform Force	Local x	-0.0480		0.0000	1.0000
160	Uniform Force	Local x	-0.0480		0.0000	1.0000
701	Uniform Force	Global X	-0.0440		0.0000	1.0000
702	Uniform Force	Global X	-0.0440		0.0000	1.0000
703	Uniform Force	Global X	-0.0440		0.0000	1.0000
704	Uniform Force	Global X	-0.0440		0.0000	1.0000
705	Uniform Force	Global X	-0.0440		0.0000	1.0000
706	Uniform Force	Global X	-0.0440		0.0000	1.0000
707	Uniform Force	Global X	-0.0440		0.0000	1.0000
708	Uniform Force	Global X	-0.0440		0.0000	1.0000
709	Uniform Force	Global X	-0.0440		0.0000	1.0000
710	Uniform Force	Global X	-0.0440		0.0000	1.0000
711	Uniform Force	Global X	-0.0440		0.0000	1.0000

LOAD CASE WS -30 deg, Member Loads

Member	Type	Direction	Magnitude at Start (kips or kips-ft)	Magnitude at End (kips or kips-ft)	Start Position (x/L)	End Position from start (x/L)
712	Uniform Force	Global X	-0.0440		0.0000	1.0000
713	Uniform Force	Global X	-0.0440		0.0000	1.0000
714	Uniform Force	Global X	-0.0440		0.0000	1.0000
715	Uniform Force	Global X	-0.0440		0.0000	1.0000
716	Uniform Force	Global X	-0.0440		0.0000	1.0000
717	Uniform Force	Global X	-0.0440		0.0000	1.0000
718	Uniform Force	Global X	-0.0440		0.0000	1.0000
719	Uniform Force	Global X	-0.0440		0.0000	1.0000
720	Uniform Force	Global X	-0.0440		0.0000	1.0000
721	Uniform Force	Global X	-0.0440		0.0000	1.0000
722	Uniform Force	Global X	-0.0440		0.0000	1.0000
723	Uniform Force	Global X	-0.0440		0.0000	1.0000
724	Uniform Force	Global X	-0.0440		0.0000	1.0000
725	Uniform Force	Global X	-0.0440		0.0000	1.0000
726	Uniform Force	Global X	-0.0440		0.0000	1.0000
727	Uniform Force	Global X	-0.0440		0.0000	1.0000
728	Uniform Force	Global X	-0.0440		0.0000	1.0000
729	Uniform Force	Global X	-0.0440		0.0000	1.0000
730	Uniform Force	Global X	-0.0440		0.0000	1.0000
731	Uniform Force	Global X	-0.0440		0.0000	1.0000
732	Uniform Force	Global X	-0.0440		0.0000	1.0000
733	Uniform Force	Global X	-0.0440		0.0000	1.0000
740	Uniform Force	Global X	-0.0440		0.0000	1.0000
741	Uniform Force	Global X	-0.0440		0.0000	1.0000
742	Uniform Force	Global X	-0.0440		0.0000	1.0000
743	Uniform Force	Global X	-0.0440		0.0000	1.0000
744	Uniform Force	Global X	-0.0440		0.0000	1.0000
745	Uniform Force	Global X	-0.0440		0.0000	1.0000
746	Uniform Force	Global X	-0.0440		0.0000	1.0000
747	Uniform Force	Global X	-0.0440		0.0000	1.0000
748	Uniform Force	Global X	-0.0440		0.0000	1.0000
749	Uniform Force	Global X	-0.0440		0.0000	1.0000
750	Uniform Force	Global X	-0.0440		0.0000	1.0000
751	Uniform Force	Global X	-0.0440		0.0000	1.0000

LOAD CASE WS -30 deg, Member Loads

Member	Type	Direction	Magnitude at Start (kips or kips-ft)	Magnitude at End (kips or kips-ft)	Start Position (x/L)	End Position from start (x/L)
752	Uniform Force	Global X	-0.0440		0.0000	1.0000
753	Uniform Force	Global X	-0.0440		0.0000	1.0000
754	Uniform Force	Global X	-0.0440		0.0000	1.0000
755	Uniform Force	Global X	-0.0440		0.0000	1.0000
756	Uniform Force	Global X	-0.0440		0.0000	1.0000
757	Uniform Force	Global X	-0.0440		0.0000	1.0000
758	Uniform Force	Global X	-0.0440		0.0000	1.0000
759	Uniform Force	Global X	-0.0440		0.0000	1.0000
760	Uniform Force	Global X	-0.0440		0.0000	1.0000
761	Uniform Force	Global X	-0.0440		0.0000	1.0000
762	Uniform Force	Global X	-0.0440		0.0000	1.0000
763	Uniform Force	Global X	-0.0440		0.0000	1.0000
764	Uniform Force	Global X	-0.0440		0.0000	1.0000
765	Uniform Force	Global X	-0.0440		0.0000	1.0000
766	Uniform Force	Global X	-0.0440		0.0000	1.0000
767	Uniform Force	Global X	-0.0440		0.0000	1.0000
768	Uniform Force	Global X	-0.0440		0.0000	1.0000
769	Uniform Force	Global X	-0.0440		0.0000	1.0000
770	Uniform Force	Global X	-0.0440		0.0000	1.0000
771	Uniform Force	Global X	-0.0440		0.0000	1.0000
772	Uniform Force	Global X	-0.0440		0.0000	1.0000
2002	Uniform Force	Global Y	0.3500		0.0000	1.0000
2003	Uniform Force	Global Y	0.3500		0.0000	1.0000
2002	Trapezoidal Force	Global X	-0.6200	-0.4800	0.0000	1.0000
2003	Trapezoidal Force	Global X	-0.4800	-0.3400	0.0000	1.0000
1017	Uniform Force	Global Y	0.2900		0.0000	1.0000
1018	Uniform Force	Global Y	0.2900		0.0000	1.0000
1019	Uniform Force	Global Y	0.2900		0.0000	1.0000
1017	Uniform Force	Global X	-0.0680		0.0000	1.0000
1018	Uniform Force	Global X	-0.0680		0.0000	1.0000
1019	Uniform Force	Global X	-0.0680		0.0000	1.0000
1013	Uniform Force	Global Y	0.2900		0.0000	1.0000
1014	Uniform Force	Global Y	0.2900		0.0000	1.0000
1015	Uniform Force	Global Y	0.2900		0.0000	1.0000

LOAD CASE WS -30 deg, Member Loads

Member	Type	Direction	Magnitude at Start (kips or kips-ft)	Magnitude at End (kips or kips-ft)	Start Position (x/L)	End Position from start (x/L)
1013	Uniform Force	Global X	-0.0680		0.0000	1.0000
1014	Uniform Force	Global X	-0.0680		0.0000	1.0000
1015	Uniform Force	Global X	-0.0680		0.0000	1.0000
3017	Uniform Force	Global Y	0.2900		0.0000	1.0000
3018	Uniform Force	Global Y	0.2900		0.0000	1.0000
3019	Uniform Force	Global Y	0.2900		0.0000	1.0000
3017	Uniform Force	Global X	-0.0680		0.0000	1.0000
3018	Uniform Force	Global X	-0.0680		0.0000	1.0000
3019	Uniform Force	Global X	-0.0680		0.0000	1.0000
3013	Uniform Force	Global Y	0.2900		0.0000	1.0000
3014	Uniform Force	Global Y	0.2900		0.0000	1.0000
3015	Uniform Force	Global Y	0.2900		0.0000	1.0000
3013	Uniform Force	Global X	-0.0680		0.0000	1.0000
3014	Uniform Force	Global X	-0.0680		0.0000	1.0000
3015	Uniform Force	Global X	-0.0680		0.0000	1.0000
1006	Uniform Force	Global X	-0.1700		0.0000	1.0000
1007	Uniform Force	Global X	-0.1700		0.0000	1.0000
1008	Uniform Force	Global X	-0.1700		0.0000	1.0000
1009	Uniform Force	Global X	-0.1700		0.0000	1.0000
1010	Uniform Force	Global X	-0.1700		0.0000	1.0000
1011	Uniform Force	Global X	-0.1700		0.0000	1.0000
1012	Uniform Force	Global X	-0.1700		0.0000	1.0000
3006	Uniform Force	Global X	-0.1700		0.0000	1.0000
3007	Uniform Force	Global X	-0.1700		0.0000	1.0000
3008	Uniform Force	Global X	-0.1700		0.0000	1.0000
3009	Uniform Force	Global X	-0.1700		0.0000	1.0000
3010	Uniform Force	Global X	-0.1700		0.0000	1.0000
3011	Uniform Force	Global X	-0.1700		0.0000	1.0000
3012	Uniform Force	Global X	-0.1700		0.0000	1.0000
501	Uniform Force	Global Y	0.0840		0.0000	1.0000
502	Uniform Force	Global Y	0.0840		0.0000	1.0000
503	Uniform Force	Global Y	0.0840		0.0000	1.0000
504	Uniform Force	Global Y	0.0840		0.0000	1.0000
505	Uniform Force	Global Y	0.0840		0.0000	1.0000

LOAD CASE WS -30 deg, Member Loads

Member	Type	Direction	Magnitude at Start (kips or kips-ft)	Magnitude at End (kips or kips-ft)	Start Position (x/L)	End Position from start (x/L)
601	Uniform Force	Global Y	0.0840		0.0000	1.0000
602	Uniform Force	Global Y	0.0840		0.0000	1.0000
603	Uniform Force	Global Y	0.0840		0.0000	1.0000
604	Uniform Force	Global Y	0.0840		0.0000	1.0000
605	Uniform Force	Global Y	0.0840		0.0000	1.0000
401	Uniform Force	Global Y	0.3500		0.0000	1.0000
402	Uniform Force	Global Y	0.3500		0.0000	1.0000
403	Uniform Force	Global Y	0.3500		0.0000	1.0000
405	Trapezoidal Force	Global Y	0.4400	0.4200	0.0000	1.0000
406	Trapezoidal Force	Global Y	0.4200	0.4000	0.0000	1.0000
407	Trapezoidal Force	Global Y	0.4000	0.3900	0.0000	1.0000
408	Trapezoidal Force	Global Y	0.3900	0.3500	0.0000	1.0000
409	Trapezoidal Force	Global Y	0.3500	0.3400	0.0000	1.0000
410	Trapezoidal Force	Global Y	0.3400	0.3200	0.0000	1.0000
411	Trapezoidal Force	Global Y	0.3200	0.3100	0.0000	1.0000
412	Trapezoidal Force	Global Y	0.3100	0.2900	0.0000	1.0000
413	Trapezoidal Force	Global Y	0.2900	0.2800	0.0000	1.0000
501	Uniform Force	Global X	-0.0480		0.0000	1.0000
502	Uniform Force	Global X	-0.0480		0.0000	1.0000
503	Uniform Force	Global X	-0.0480		0.0000	1.0000
504	Uniform Force	Global X	-0.0480		0.0000	1.0000
505	Uniform Force	Global X	-0.0480		0.0000	1.0000
601	Uniform Force	Global X	-0.0480		0.0000	1.0000
602	Uniform Force	Global X	-0.0480		0.0000	1.0000
603	Uniform Force	Global X	-0.0480		0.0000	1.0000
604	Uniform Force	Global X	-0.0480		0.0000	1.0000
605	Uniform Force	Global X	-0.0480		0.0000	1.0000
401	Uniform Force	Global X	-0.1700		0.0000	1.0000
402	Uniform Force	Global X	-0.1700		0.0000	1.0000
403	Uniform Force	Global X	-0.1700		0.0000	1.0000
405	Trapezoidal Force	Global X	-0.2500	-0.2400	0.0000	1.0000
406	Trapezoidal Force	Global X	-0.2400	-0.2300	0.0000	1.0000
407	Trapezoidal Force	Global X	-0.2300	-0.2200	0.0000	1.0000
408	Trapezoidal Force	Global X	-0.2200	-0.2000	0.0000	1.0000

LOAD CASE WS -30 deg, Member Loads

Member	Type	Direction	Magnitude at Start (kips or kips-ft)	Magnitude at End (kips or kips-ft)	Start Position (x/L)	End Position from start (x/L)
409	Trapezoidal Force	Global X	-0.2000	-0.2000	0.0000	1.0000
410	Trapezoidal Force	Global X	-0.2000	-0.1900	0.0000	1.0000
411	Trapezoidal Force	Global X	-0.1900	-0.1800	0.0000	1.0000
412	Trapezoidal Force	Global X	-0.1800	-0.1700	0.0000	1.0000
413	Trapezoidal Force	Global X	-0.1700	-0.1600	0.0000	1.0000

LOAD CASE WS_-15 deg, Member Loads

Member	Type	Direction	Magnitude at Start (kips or kips-ft)	Magnitude at End (kips or kips-ft)	Start Position (x/L)	End Position from start (x/L)
1	Uniform Force	Global Y	0.3570		0.0000	1.0000
2	Uniform Force	Global Y	0.3570		0.0000	1.0000
3	Uniform Force	Global Y	0.3570		0.0000	1.0000
4	Uniform Force	Global Y	0.3570		0.0000	1.0000
5	Uniform Force	Global Y	0.3570		0.0000	1.0000
6	Uniform Force	Global Y	0.3570		0.0000	1.0000
7	Uniform Force	Global Y	0.3570		0.0000	1.0000
8	Uniform Force	Global Y	0.3570		0.0000	1.0000
9	Uniform Force	Global Y	0.3570		0.0000	1.0000
10	Uniform Force	Global Y	0.3570		0.0000	1.0000
11	Uniform Force	Global Y	0.3570		0.0000	1.0000
12	Uniform Force	Global Y	0.3570		0.0000	1.0000
13	Uniform Force	Global Y	0.3570		0.0000	1.0000
14	Uniform Force	Global Y	0.3570		0.0000	1.0000
15	Uniform Force	Global Y	0.3570		0.0000	1.0000
16	Uniform Force	Global Y	0.3570		0.0000	1.0000
17	Uniform Force	Global Y	0.3570		0.0000	1.0000
18	Uniform Force	Global Y	0.3570		0.0000	1.0000
19	Uniform Force	Global Y	0.3570		0.0000	1.0000
20	Uniform Force	Global Y	0.3570		0.0000	1.0000
21	Uniform Force	Global Y	0.3570		0.0000	1.0000
22	Uniform Force	Global Y	0.3570		0.0000	1.0000
23	Uniform Force	Global Y	0.3570		0.0000	1.0000
24	Uniform Force	Global Y	0.3570		0.0000	1.0000

LOAD CASE WS -15 deg, Member Loads

Member	Type	Direction	Magnitude at Start (kips or kips-ft)	Magnitude at End (kips or kips-ft)	Start Position (x/L)	End Position from start (x/L)
25	Uniform Force	Global Y	0.3570		0.0000	1.0000
26	Uniform Force	Global Y	0.3570		0.0000	1.0000
27	Uniform Force	Global Y	0.3570		0.0000	1.0000
28	Uniform Force	Global Y	0.3570		0.0000	1.0000
29	Uniform Force	Global Y	0.3570		0.0000	1.0000
30	Uniform Force	Global Y	0.3570		0.0000	1.0000
31	Uniform Force	Global Y	0.3570		0.0000	1.0000
32	Uniform Force	Global Y	0.3570		0.0000	1.0000
33	Uniform Force	Global Y	0.3570		0.0000	1.0000
34	Uniform Force	Global Y	0.3570		0.0000	1.0000
35	Uniform Force	Global Y	0.3570		0.0000	1.0000
36	Uniform Force	Global Y	0.3570		0.0000	1.0000
37	Uniform Force	Global Y	0.3570		0.0000	1.0000
38	Uniform Force	Global Y	0.3570		0.0000	1.0000
39	Uniform Force	Global Y	0.3570		0.0000	1.0000
40	Uniform Force	Global Y	0.3570		0.0000	1.0000
41	Uniform Force	Global Y	0.3570		0.0000	1.0000
42	Uniform Force	Global Y	0.3570		0.0000	1.0000
43	Uniform Force	Global Y	0.3570		0.0000	1.0000
44	Uniform Force	Global Y	0.3570		0.0000	1.0000
45	Uniform Force	Global Y	0.3570		0.0000	1.0000
46	Uniform Force	Global Y	0.3570		0.0000	1.0000
47	Uniform Force	Global Y	0.3570		0.0000	1.0000
48	Uniform Force	Global Y	0.3570		0.0000	1.0000
49	Uniform Force	Global Y	0.3570		0.0000	1.0000
50	Uniform Force	Global Y	0.3570		0.0000	1.0000
51	Uniform Force	Global Y	0.3570		0.0000	1.0000
52	Uniform Force	Global Y	0.3570		0.0000	1.0000
53	Uniform Force	Global Y	0.3570		0.0000	1.0000
54	Uniform Force	Global Y	0.3570		0.0000	1.0000
55	Uniform Force	Global Y	0.3570		0.0000	1.0000
56	Uniform Force	Global Y	0.3570		0.0000	1.0000
57	Uniform Force	Global Y	0.3570		0.0000	1.0000
101	Uniform Force	Global Y	0.1220		0.0000	1.0000

LOAD CASE WS -15 deg, Member Loads

Member	Type	Direction	Magnitude at Start (kips or kips-ft)	Magnitude at End (kips or kips-ft)	Start Position (x/L)	End Position from start (x/L)
102	Uniform Force	Global Y	0.1220		0.0000	1.0000
103	Uniform Force	Global Y	0.1220		0.0000	1.0000
104	Uniform Force	Global Y	0.1220		0.0000	1.0000
105	Uniform Force	Global Y	0.1220		0.0000	1.0000
106	Uniform Force	Global Y	0.1220		0.0000	1.0000
107	Uniform Force	Global Y	0.1220		0.0000	1.0000
108	Uniform Force	Global Y	0.1220		0.0000	1.0000
109	Uniform Force	Global Y	0.1220		0.0000	1.0000
110	Uniform Force	Global Y	0.1220		0.0000	1.0000
111	Uniform Force	Global Y	0.1220		0.0000	1.0000
112	Uniform Force	Global Y	0.1220		0.0000	1.0000
113	Uniform Force	Global Y	0.1220		0.0000	1.0000
114	Uniform Force	Global Y	0.1220		0.0000	1.0000
115	Uniform Force	Global Y	0.1220		0.0000	1.0000
116	Uniform Force	Global Y	0.1220		0.0000	1.0000
117	Uniform Force	Global Y	0.1220		0.0000	1.0000
118	Uniform Force	Global Y	0.1220		0.0000	1.0000
119	Uniform Force	Global Y	0.1220		0.0000	1.0000
120	Uniform Force	Global Y	0.1220		0.0000	1.0000
121	Uniform Force	Global Y	0.1220		0.0000	1.0000
122	Uniform Force	Global Y	0.1220		0.0000	1.0000
123	Uniform Force	Global Y	0.1220		0.0000	1.0000
124	Uniform Force	Global Y	0.1220		0.0000	1.0000
125	Uniform Force	Global Y	0.1220		0.0000	1.0000
126	Uniform Force	Global Y	0.1220		0.0000	1.0000
127	Uniform Force	Global Y	0.1220		0.0000	1.0000
128	Uniform Force	Global Y	0.1220		0.0000	1.0000
129	Uniform Force	Global Y	0.1220		0.0000	1.0000
130	Uniform Force	Global Y	0.1220		0.0000	1.0000
131	Uniform Force	Global Y	0.1220		0.0000	1.0000
132	Uniform Force	Global Y	0.1220		0.0000	1.0000
133	Uniform Force	Global Y	0.1220		0.0000	1.0000
134	Uniform Force	Global Y	0.1220		0.0000	1.0000
135	Uniform Force	Global Y	0.1220		0.0000	1.0000

LOAD CASE WS -15 deg, Member Loads

Member	Type	Direction	Magnitude at Start (kips or kips-ft)	Magnitude at End (kips or kips-ft)	Start Position (x/L)	End Position from start (x/L)
136	Uniform Force	Global Y	0.1220		0.0000	1.0000
137	Uniform Force	Global Y	0.1220		0.0000	1.0000
138	Uniform Force	Global Y	0.1220		0.0000	1.0000
139	Uniform Force	Global Y	0.1220		0.0000	1.0000
140	Uniform Force	Global Y	0.1220		0.0000	1.0000
141	Uniform Force	Global Y	0.1220		0.0000	1.0000
142	Uniform Force	Global Y	0.1220		0.0000	1.0000
143	Uniform Force	Global Y	0.1220		0.0000	1.0000
144	Uniform Force	Global Y	0.1220		0.0000	1.0000
145	Uniform Force	Global Y	0.1220		0.0000	1.0000
146	Uniform Force	Global Y	0.1220		0.0000	1.0000
147	Uniform Force	Global Y	0.1220		0.0000	1.0000
148	Uniform Force	Global Y	0.1220		0.0000	1.0000
149	Uniform Force	Global Y	0.1220		0.0000	1.0000
150	Uniform Force	Global Y	0.1220		0.0000	1.0000
151	Uniform Force	Global Y	0.1220		0.0000	1.0000
152	Uniform Force	Global Y	0.1220		0.0000	1.0000
153	Uniform Force	Global Y	0.1220		0.0000	1.0000
154	Uniform Force	Global Y	0.1220		0.0000	1.0000
155	Uniform Force	Global Y	0.1220		0.0000	1.0000
156	Uniform Force	Global Y	0.1220		0.0000	1.0000
157	Uniform Force	Global Y	0.1220		0.0000	1.0000
158	Uniform Force	Global Y	0.1220		0.0000	1.0000
159	Uniform Force	Global Y	0.1220		0.0000	1.0000
160	Uniform Force	Global Y	0.1220		0.0000	1.0000
701	Uniform Force	Global Y	0.1130		0.0000	1.0000
702	Uniform Force	Global Y	0.1130		0.0000	1.0000
703	Uniform Force	Global Y	0.1130		0.0000	1.0000
704	Uniform Force	Global Y	0.1130		0.0000	1.0000
705	Uniform Force	Global Y	0.1130		0.0000	1.0000
706	Uniform Force	Global Y	0.1130		0.0000	1.0000
707	Uniform Force	Global Y	0.1130		0.0000	1.0000
708	Uniform Force	Global Y	0.1130		0.0000	1.0000
709	Uniform Force	Global Y	0.1130		0.0000	1.0000

LOAD CASE WS -15 deg, Member Loads

Member	Type	Direction	Magnitude at Start (kips or kips-ft)	Magnitude at End (kips or kips-ft)	Start Position (x/L)	End Position from start (x/L)
710	Uniform Force	Global Y	0.1130		0.0000	1.0000
711	Uniform Force	Global Y	0.1130		0.0000	1.0000
712	Uniform Force	Global Y	0.1130		0.0000	1.0000
713	Uniform Force	Global Y	0.1130		0.0000	1.0000
714	Uniform Force	Global Y	0.1130		0.0000	1.0000
715	Uniform Force	Global Y	0.1130		0.0000	1.0000
716	Uniform Force	Global Y	0.1130		0.0000	1.0000
717	Uniform Force	Global Y	0.1130		0.0000	1.0000
718	Uniform Force	Global Y	0.1130		0.0000	1.0000
719	Uniform Force	Global Y	0.1130		0.0000	1.0000
720	Uniform Force	Global Y	0.1130		0.0000	1.0000
721	Uniform Force	Global Y	0.1130		0.0000	1.0000
722	Uniform Force	Global Y	0.1130		0.0000	1.0000
723	Uniform Force	Global Y	0.1130		0.0000	1.0000
724	Uniform Force	Global Y	0.1130		0.0000	1.0000
725	Uniform Force	Global Y	0.1130		0.0000	1.0000
726	Uniform Force	Global Y	0.1130		0.0000	1.0000
727	Uniform Force	Global Y	0.1130		0.0000	1.0000
728	Uniform Force	Global Y	0.1130		0.0000	1.0000
729	Uniform Force	Global Y	0.1130		0.0000	1.0000
730	Uniform Force	Global Y	0.1130		0.0000	1.0000
731	Uniform Force	Global Y	0.1130		0.0000	1.0000
732	Uniform Force	Global Y	0.1130		0.0000	1.0000
733	Uniform Force	Global Y	0.1130		0.0000	1.0000
740	Uniform Force	Global Y	0.1130		0.0000	1.0000
741	Uniform Force	Global Y	0.1130		0.0000	1.0000
742	Uniform Force	Global Y	0.1130		0.0000	1.0000
743	Uniform Force	Global Y	0.1130		0.0000	1.0000
744	Uniform Force	Global Y	0.1130		0.0000	1.0000
745	Uniform Force	Global Y	0.1130		0.0000	1.0000
746	Uniform Force	Global Y	0.1130		0.0000	1.0000
747	Uniform Force	Global Y	0.1130		0.0000	1.0000
748	Uniform Force	Global Y	0.1130		0.0000	1.0000
749	Uniform Force	Global Y	0.1130		0.0000	1.0000

LOAD CASE WS -15 deg, Member Loads

Member	Type	Direction	Magnitude at Start (kips or kips-ft)	Magnitude at End (kips or kips-ft)	Start Position (x/L)	End Position from start (x/L)
750	Uniform Force	Global Y	0.1130		0.0000	1.0000
751	Uniform Force	Global Y	0.1130		0.0000	1.0000
752	Uniform Force	Global Y	0.1130		0.0000	1.0000
753	Uniform Force	Global Y	0.1130		0.0000	1.0000
754	Uniform Force	Global Y	0.1130		0.0000	1.0000
755	Uniform Force	Global Y	0.1130		0.0000	1.0000
756	Uniform Force	Global Y	0.1130		0.0000	1.0000
757	Uniform Force	Global Y	0.1130		0.0000	1.0000
758	Uniform Force	Global Y	0.1130		0.0000	1.0000
759	Uniform Force	Global Y	0.1130		0.0000	1.0000
760	Uniform Force	Global Y	0.1130		0.0000	1.0000
761	Uniform Force	Global Y	0.1130		0.0000	1.0000
762	Uniform Force	Global Y	0.1130		0.0000	1.0000
763	Uniform Force	Global Y	0.1130		0.0000	1.0000
764	Uniform Force	Global Y	0.1130		0.0000	1.0000
765	Uniform Force	Global Y	0.1130		0.0000	1.0000
766	Uniform Force	Global Y	0.1130		0.0000	1.0000
767	Uniform Force	Global Y	0.1130		0.0000	1.0000
768	Uniform Force	Global Y	0.1130		0.0000	1.0000
769	Uniform Force	Global Y	0.1130		0.0000	1.0000
770	Uniform Force	Global Y	0.1130		0.0000	1.0000
771	Uniform Force	Global Y	0.1130		0.0000	1.0000
772	Uniform Force	Global Y	0.1130		0.0000	1.0000
1	Uniform Moment	Local x	-0.9000		0.0000	1.0000
2	Uniform Moment	Local x	-0.9000		0.0000	1.0000
3	Uniform Moment	Local x	-0.9000		0.0000	1.0000
4	Uniform Moment	Local x	-0.9000		0.0000	1.0000
5	Uniform Moment	Local x	-0.9000		0.0000	1.0000
6	Uniform Moment	Local x	-0.9000		0.0000	1.0000
7	Uniform Moment	Local x	-0.9000		0.0000	1.0000
8	Uniform Moment	Local x	-0.9000		0.0000	1.0000
9	Uniform Moment	Local x	-0.9000		0.0000	1.0000
10	Uniform Moment	Local x	-0.9000		0.0000	1.0000
11	Uniform Moment	Local x	-0.9000		0.0000	1.0000

LOAD CASE WS -15 deg, Member Loads

Member	Type	Direction	Magnitude at Start (kips or kips-ft)	Magnitude at End (kips or kips-ft)	Start Position (x/L)	End Position from start (x/L)
12	Uniform Moment	Local x	-0.9000		0.0000	1.0000
13	Uniform Moment	Local x	-0.9000		0.0000	1.0000
14	Uniform Moment	Local x	-0.9000		0.0000	1.0000
15	Uniform Moment	Local x	-0.9000		0.0000	1.0000
16	Uniform Moment	Local x	-0.9000		0.0000	1.0000
17	Uniform Moment	Local x	-0.9000		0.0000	1.0000
18	Uniform Moment	Local x	-0.9000		0.0000	1.0000
19	Uniform Moment	Local x	-0.9000		0.0000	1.0000
20	Uniform Moment	Local x	-0.9000		0.0000	1.0000
21	Uniform Moment	Local x	-0.9000		0.0000	1.0000
22	Uniform Moment	Local x	-0.9000		0.0000	1.0000
23	Uniform Moment	Local x	-0.9000		0.0000	1.0000
24	Uniform Moment	Local x	-0.9000		0.0000	1.0000
25	Uniform Moment	Local x	-0.9000		0.0000	1.0000
26	Uniform Moment	Local x	-0.9000		0.0000	1.0000
27	Uniform Moment	Local x	-0.9000		0.0000	1.0000
28	Uniform Moment	Local x	-0.9000		0.0000	1.0000
29	Uniform Moment	Local x	-0.9000		0.0000	1.0000
30	Uniform Moment	Local x	-0.9000		0.0000	1.0000
31	Uniform Moment	Local x	-0.9000		0.0000	1.0000
32	Uniform Moment	Local x	-0.9000		0.0000	1.0000
33	Uniform Moment	Local x	-0.9000		0.0000	1.0000
34	Uniform Moment	Local x	-0.9000		0.0000	1.0000
35	Uniform Moment	Local x	-0.9000		0.0000	1.0000
36	Uniform Moment	Local x	-0.9000		0.0000	1.0000
37	Uniform Moment	Local x	-0.9000		0.0000	1.0000
38	Uniform Moment	Local x	-0.9000		0.0000	1.0000
39	Uniform Moment	Local x	-0.9000		0.0000	1.0000
40	Uniform Moment	Local x	-0.9000		0.0000	1.0000
41	Uniform Moment	Local x	-0.9000		0.0000	1.0000
42	Uniform Moment	Local x	-0.9000		0.0000	1.0000
43	Uniform Moment	Local x	-0.9000		0.0000	1.0000
44	Uniform Moment	Local x	-0.9000		0.0000	1.0000
45	Uniform Moment	Local x	-0.9000		0.0000	1.0000

LOAD CASE WS -15 deg, Member Loads

Member	Type	Direction	Magnitude at Start (kips or kips-ft)	Magnitude at End (kips or kips-ft)	Start Position (x/L)	End Position from start (x/L)
46	Uniform Moment	Local x	-0.9000		0.0000	1.0000
47	Uniform Moment	Local x	-0.9000		0.0000	1.0000
48	Uniform Moment	Local x	-0.9000		0.0000	1.0000
49	Uniform Moment	Local x	-0.9000		0.0000	1.0000
50	Uniform Moment	Local x	-0.9000		0.0000	1.0000
51	Uniform Moment	Local x	-0.9000		0.0000	1.0000
52	Uniform Moment	Local x	-0.9000		0.0000	1.0000
53	Uniform Moment	Local x	-0.9000		0.0000	1.0000
54	Uniform Moment	Local x	-0.9000		0.0000	1.0000
55	Uniform Moment	Local x	-0.9000		0.0000	1.0000
56	Uniform Moment	Local x	-0.9000		0.0000	1.0000
57	Uniform Moment	Local x	-0.9000		0.0000	1.0000
1	Uniform Force	Local x	-0.0610		0.0000	1.0000
2	Uniform Force	Local x	-0.0610		0.0000	1.0000
3	Uniform Force	Local x	-0.0610		0.0000	1.0000
4	Uniform Force	Local x	-0.0610		0.0000	1.0000
5	Uniform Force	Local x	-0.0610		0.0000	1.0000
6	Uniform Force	Local x	-0.0610		0.0000	1.0000
7	Uniform Force	Local x	-0.0610		0.0000	1.0000
8	Uniform Force	Local x	-0.0610		0.0000	1.0000
9	Uniform Force	Local x	-0.0610		0.0000	1.0000
10	Uniform Force	Local x	-0.0610		0.0000	1.0000
11	Uniform Force	Local x	-0.0610		0.0000	1.0000
12	Uniform Force	Local x	-0.0610		0.0000	1.0000
13	Uniform Force	Local x	-0.0610		0.0000	1.0000
14	Uniform Force	Local x	-0.0610		0.0000	1.0000
15	Uniform Force	Local x	-0.0610		0.0000	1.0000
16	Uniform Force	Local x	-0.0610		0.0000	1.0000
17	Uniform Force	Local x	-0.0610		0.0000	1.0000
18	Uniform Force	Local x	-0.0610		0.0000	1.0000
19	Uniform Force	Local x	-0.0610		0.0000	1.0000
20	Uniform Force	Local x	-0.0610		0.0000	1.0000
21	Uniform Force	Local x	-0.0610		0.0000	1.0000
22	Uniform Force	Local x	-0.0610		0.0000	1.0000

LOAD CASE WS -15 deg, Member Loads

Member	Type	Direction	Magnitude at Start (kips or kips-ft)	Magnitude at End (kips or kips-ft)	Start Position (x/L)	End Position from start (x/L)
23	Uniform Force	Local x	-0.0610		0.0000	1.0000
24	Uniform Force	Local x	-0.0610		0.0000	1.0000
25	Uniform Force	Local x	-0.0610		0.0000	1.0000
26	Uniform Force	Local x	-0.0610		0.0000	1.0000
27	Uniform Force	Local x	-0.0610		0.0000	1.0000
28	Uniform Force	Local x	-0.0610		0.0000	1.0000
29	Uniform Force	Local x	-0.0610		0.0000	1.0000
30	Uniform Force	Local x	-0.0610		0.0000	1.0000
31	Uniform Force	Local x	-0.0610		0.0000	1.0000
32	Uniform Force	Local x	-0.0610		0.0000	1.0000
33	Uniform Force	Local x	-0.0610		0.0000	1.0000
34	Uniform Force	Local x	-0.0610		0.0000	1.0000
35	Uniform Force	Local x	-0.0610		0.0000	1.0000
36	Uniform Force	Local x	-0.0610		0.0000	1.0000
37	Uniform Force	Local x	-0.0610		0.0000	1.0000
38	Uniform Force	Local x	-0.0610		0.0000	1.0000
39	Uniform Force	Local x	-0.0610		0.0000	1.0000
40	Uniform Force	Local x	-0.0610		0.0000	1.0000
41	Uniform Force	Local x	-0.0610		0.0000	1.0000
42	Uniform Force	Local x	-0.0610		0.0000	1.0000
43	Uniform Force	Local x	-0.0610		0.0000	1.0000
44	Uniform Force	Local x	-0.0610		0.0000	1.0000
45	Uniform Force	Local x	-0.0610		0.0000	1.0000
46	Uniform Force	Local x	-0.0610		0.0000	1.0000
47	Uniform Force	Local x	-0.0610		0.0000	1.0000
48	Uniform Force	Local x	-0.0610		0.0000	1.0000
49	Uniform Force	Local x	-0.0610		0.0000	1.0000
50	Uniform Force	Local x	-0.0610		0.0000	1.0000
51	Uniform Force	Local x	-0.0610		0.0000	1.0000
52	Uniform Force	Local x	-0.0610		0.0000	1.0000
53	Uniform Force	Local x	-0.0610		0.0000	1.0000
54	Uniform Force	Local x	-0.0610		0.0000	1.0000
55	Uniform Force	Local x	-0.0610		0.0000	1.0000
56	Uniform Force	Local x	-0.0610		0.0000	1.0000

LOAD CASE WS -15 deg, Member Loads

Member	Type	Direction	Magnitude at Start (kips or kips-ft)	Magnitude at End (kips or kips-ft)	Start Position (x/L)	End Position from start (x/L)
57	Uniform Force	Local x	-0.0610		0.0000	1.0000
101	Uniform Force	Local x	-0.0210		0.0000	1.0000
102	Uniform Force	Local x	-0.0210		0.0000	1.0000
103	Uniform Force	Local x	-0.0210		0.0000	1.0000
104	Uniform Force	Local x	-0.0210		0.0000	1.0000
105	Uniform Force	Local x	-0.0210		0.0000	1.0000
106	Uniform Force	Local x	-0.0210		0.0000	1.0000
107	Uniform Force	Local x	-0.0210		0.0000	1.0000
108	Uniform Force	Local x	-0.0210		0.0000	1.0000
109	Uniform Force	Local x	-0.0210		0.0000	1.0000
110	Uniform Force	Local x	-0.0210		0.0000	1.0000
111	Uniform Force	Local x	-0.0210		0.0000	1.0000
112	Uniform Force	Local x	-0.0210		0.0000	1.0000
113	Uniform Force	Local x	-0.0210		0.0000	1.0000
114	Uniform Force	Local x	-0.0210		0.0000	1.0000
115	Uniform Force	Local x	-0.0210		0.0000	1.0000
116	Uniform Force	Local x	-0.0210		0.0000	1.0000
117	Uniform Force	Local x	-0.0210		0.0000	1.0000
118	Uniform Force	Local x	-0.0210		0.0000	1.0000
119	Uniform Force	Local x	-0.0210		0.0000	1.0000
120	Uniform Force	Local x	-0.0210		0.0000	1.0000
121	Uniform Force	Local x	-0.0210		0.0000	1.0000
122	Uniform Force	Local x	-0.0210		0.0000	1.0000
123	Uniform Force	Local x	-0.0210		0.0000	1.0000
124	Uniform Force	Local x	-0.0210		0.0000	1.0000
125	Uniform Force	Local x	-0.0210		0.0000	1.0000
126	Uniform Force	Local x	-0.0210		0.0000	1.0000
127	Uniform Force	Local x	-0.0210		0.0000	1.0000
128	Uniform Force	Local x	-0.0210		0.0000	1.0000
129	Uniform Force	Local x	-0.0210		0.0000	1.0000
130	Uniform Force	Local x	-0.0210		0.0000	1.0000
131	Uniform Force	Local x	-0.0210		0.0000	1.0000
132	Uniform Force	Local x	-0.0210		0.0000	1.0000
133	Uniform Force	Local x	-0.0210		0.0000	1.0000

LOAD CASE WS -15 deg, Member Loads

Member	Type	Direction	Magnitude at Start (kips or kips-ft)	Magnitude at End (kips or kips-ft)	Start Position (x/L)	End Position from start (x/L)
134	Uniform Force	Local x	-0.0210		0.0000	1.0000
135	Uniform Force	Local x	-0.0210		0.0000	1.0000
136	Uniform Force	Local x	-0.0210		0.0000	1.0000
137	Uniform Force	Local x	-0.0210		0.0000	1.0000
138	Uniform Force	Local x	-0.0210		0.0000	1.0000
139	Uniform Force	Local x	-0.0210		0.0000	1.0000
140	Uniform Force	Local x	-0.0210		0.0000	1.0000
141	Uniform Force	Local x	-0.0210		0.0000	1.0000
142	Uniform Force	Local x	-0.0210		0.0000	1.0000
143	Uniform Force	Local x	-0.0210		0.0000	1.0000
144	Uniform Force	Local x	-0.0210		0.0000	1.0000
145	Uniform Force	Local x	-0.0210		0.0000	1.0000
146	Uniform Force	Local x	-0.0210		0.0000	1.0000
147	Uniform Force	Local x	-0.0210		0.0000	1.0000
148	Uniform Force	Local x	-0.0210		0.0000	1.0000
149	Uniform Force	Local x	-0.0210		0.0000	1.0000
150	Uniform Force	Local x	-0.0210		0.0000	1.0000
151	Uniform Force	Local x	-0.0210		0.0000	1.0000
152	Uniform Force	Local x	-0.0210		0.0000	1.0000
153	Uniform Force	Local x	-0.0210		0.0000	1.0000
154	Uniform Force	Local x	-0.0210		0.0000	1.0000
155	Uniform Force	Local x	-0.0210		0.0000	1.0000
156	Uniform Force	Local x	-0.0210		0.0000	1.0000
157	Uniform Force	Local x	-0.0210		0.0000	1.0000
158	Uniform Force	Local x	-0.0210		0.0000	1.0000
159	Uniform Force	Local x	-0.0210		0.0000	1.0000
160	Uniform Force	Local x	-0.0210		0.0000	1.0000
701	Uniform Force	Global X	-0.0190		0.0000	1.0000
702	Uniform Force	Global X	-0.0190		0.0000	1.0000
703	Uniform Force	Global X	-0.0190		0.0000	1.0000
704	Uniform Force	Global X	-0.0190		0.0000	1.0000
705	Uniform Force	Global X	-0.0190		0.0000	1.0000
706	Uniform Force	Global X	-0.0190		0.0000	1.0000
707	Uniform Force	Global X	-0.0190		0.0000	1.0000

LOAD CASE WS -15 deg, Member Loads

Member	Type	Direction	Magnitude at Start (kips or kips-ft)	Magnitude at End (kips or kips-ft)	Start Position (x/L)	End Position from start (x/L)
708	Uniform Force	Global X	-0.0190		0.0000	1.0000
709	Uniform Force	Global X	-0.0190		0.0000	1.0000
710	Uniform Force	Global X	-0.0190		0.0000	1.0000
711	Uniform Force	Global X	-0.0190		0.0000	1.0000
712	Uniform Force	Global X	-0.0190		0.0000	1.0000
713	Uniform Force	Global X	-0.0190		0.0000	1.0000
714	Uniform Force	Global X	-0.0190		0.0000	1.0000
715	Uniform Force	Global X	-0.0190		0.0000	1.0000
716	Uniform Force	Global X	-0.0190		0.0000	1.0000
717	Uniform Force	Global X	-0.0190		0.0000	1.0000
718	Uniform Force	Global X	-0.0190		0.0000	1.0000
719	Uniform Force	Global X	-0.0190		0.0000	1.0000
720	Uniform Force	Global X	-0.0190		0.0000	1.0000
721	Uniform Force	Global X	-0.0190		0.0000	1.0000
722	Uniform Force	Global X	-0.0190		0.0000	1.0000
723	Uniform Force	Global X	-0.0190		0.0000	1.0000
724	Uniform Force	Global X	-0.0190		0.0000	1.0000
725	Uniform Force	Global X	-0.0190		0.0000	1.0000
726	Uniform Force	Global X	-0.0190		0.0000	1.0000
727	Uniform Force	Global X	-0.0190		0.0000	1.0000
728	Uniform Force	Global X	-0.0190		0.0000	1.0000
729	Uniform Force	Global X	-0.0190		0.0000	1.0000
730	Uniform Force	Global X	-0.0190		0.0000	1.0000
731	Uniform Force	Global X	-0.0190		0.0000	1.0000
732	Uniform Force	Global X	-0.0190		0.0000	1.0000
733	Uniform Force	Global X	-0.0190		0.0000	1.0000
740	Uniform Force	Global X	-0.0190		0.0000	1.0000
741	Uniform Force	Global X	-0.0190		0.0000	1.0000
742	Uniform Force	Global X	-0.0190		0.0000	1.0000
743	Uniform Force	Global X	-0.0190		0.0000	1.0000
744	Uniform Force	Global X	-0.0190		0.0000	1.0000
745	Uniform Force	Global X	-0.0190		0.0000	1.0000
746	Uniform Force	Global X	-0.0190		0.0000	1.0000
747	Uniform Force	Global X	-0.0190		0.0000	1.0000

LOAD CASE WS -15 deg, Member Loads

Member	Type	Direction	Magnitude at Start (kips or kips-ft)	Magnitude at End (kips or kips-ft)	Start Position (x/L)	End Position from start (x/L)
748	Uniform Force	Global X	-0.0190		0.0000	1.0000
749	Uniform Force	Global X	-0.0190		0.0000	1.0000
750	Uniform Force	Global X	-0.0190		0.0000	1.0000
751	Uniform Force	Global X	-0.0190		0.0000	1.0000
752	Uniform Force	Global X	-0.0190		0.0000	1.0000
753	Uniform Force	Global X	-0.0190		0.0000	1.0000
754	Uniform Force	Global X	-0.0190		0.0000	1.0000
755	Uniform Force	Global X	-0.0190		0.0000	1.0000
756	Uniform Force	Global X	-0.0190		0.0000	1.0000
757	Uniform Force	Global X	-0.0190		0.0000	1.0000
758	Uniform Force	Global X	-0.0190		0.0000	1.0000
759	Uniform Force	Global X	-0.0190		0.0000	1.0000
760	Uniform Force	Global X	-0.0190		0.0000	1.0000
761	Uniform Force	Global X	-0.0190		0.0000	1.0000
762	Uniform Force	Global X	-0.0190		0.0000	1.0000
763	Uniform Force	Global X	-0.0190		0.0000	1.0000
764	Uniform Force	Global X	-0.0190		0.0000	1.0000
765	Uniform Force	Global X	-0.0190		0.0000	1.0000
766	Uniform Force	Global X	-0.0190		0.0000	1.0000
767	Uniform Force	Global X	-0.0190		0.0000	1.0000
768	Uniform Force	Global X	-0.0190		0.0000	1.0000
769	Uniform Force	Global X	-0.0190		0.0000	1.0000
770	Uniform Force	Global X	-0.0190		0.0000	1.0000
771	Uniform Force	Global X	-0.0190		0.0000	1.0000
772	Uniform Force	Global X	-0.0190		0.0000	1.0000
2002	Uniform Force	Global Y	0.3900		0.0000	1.0000
2003	Uniform Force	Global Y	0.3900		0.0000	1.0000
2002	Trapezoidal Force	Global X	-0.3100	-0.2400	0.0000	1.0000
2003	Trapezoidal Force	Global X	-0.2400	-0.1700	0.0000	1.0000
1017	Uniform Force	Global Y	0.3250		0.0000	1.0000
1018	Uniform Force	Global Y	0.3250		0.0000	1.0000
1019	Uniform Force	Global Y	0.3250		0.0000	1.0000
1017	Uniform Force	Global X	-0.0340		0.0000	1.0000
1018	Uniform Force	Global X	-0.0340		0.0000	1.0000

LOAD CASE WS -15 deg, Member Loads

Member	Type	Direction	Magnitude at Start (kips or kips-ft)	Magnitude at End (kips or kips-ft)	Start Position (x/L)	End Position from start (x/L)
1019	Uniform Force	Global X	-0.0340		0.0000	1.0000
1013	Uniform Force	Global Y	0.3250		0.0000	1.0000
1014	Uniform Force	Global Y	0.3250		0.0000	1.0000
1015	Uniform Force	Global Y	0.3250		0.0000	1.0000
1013	Uniform Force	Global X	-0.0340		0.0000	1.0000
1014	Uniform Force	Global X	-0.0340		0.0000	1.0000
1015	Uniform Force	Global X	-0.0340		0.0000	1.0000
3017	Uniform Force	Global Y	0.3250		0.0000	1.0000
3018	Uniform Force	Global Y	0.3250		0.0000	1.0000
3019	Uniform Force	Global Y	0.3250		0.0000	1.0000
3017	Uniform Force	Global X	-0.0340		0.0000	1.0000
3018	Uniform Force	Global X	-0.0340		0.0000	1.0000
3019	Uniform Force	Global X	-0.0340		0.0000	1.0000
3013	Uniform Force	Global Y	0.3250		0.0000	1.0000
3014	Uniform Force	Global Y	0.3250		0.0000	1.0000
3015	Uniform Force	Global Y	0.3250		0.0000	1.0000
3013	Uniform Force	Global X	-0.0340		0.0000	1.0000
3014	Uniform Force	Global X	-0.0340		0.0000	1.0000
3015	Uniform Force	Global X	-0.0340		0.0000	1.0000
1006	Uniform Force	Global X	-0.0850		0.0000	1.0000
1007	Uniform Force	Global X	-0.0850		0.0000	1.0000
1008	Uniform Force	Global X	-0.0850		0.0000	1.0000
1009	Uniform Force	Global X	-0.0850		0.0000	1.0000
1010	Uniform Force	Global X	-0.0850		0.0000	1.0000
1011	Uniform Force	Global X	-0.0850		0.0000	1.0000
1012	Uniform Force	Global X	-0.0850		0.0000	1.0000
3006	Uniform Force	Global X	-0.0850		0.0000	1.0000
3007	Uniform Force	Global X	-0.0850		0.0000	1.0000
3008	Uniform Force	Global X	-0.0850		0.0000	1.0000
3009	Uniform Force	Global X	-0.0850		0.0000	1.0000
3010	Uniform Force	Global X	-0.0850		0.0000	1.0000
3011	Uniform Force	Global X	-0.0850		0.0000	1.0000
3012	Uniform Force	Global X	-0.0850		0.0000	1.0000
501	Uniform Force	Global Y	0.0940		0.0000	1.0000

LOAD CASE WS -15 deg, Member Loads

Member	Type	Direction	Magnitude at Start (kips or kips-ft)	Magnitude at End (kips or kips-ft)	Start Position (x/L)	End Position from start (x/L)
502	Uniform Force	Global Y	0.0940		0.0000	1.0000
503	Uniform Force	Global Y	0.0940		0.0000	1.0000
504	Uniform Force	Global Y	0.0940		0.0000	1.0000
505	Uniform Force	Global Y	0.0940		0.0000	1.0000
601	Uniform Force	Global Y	0.0940		0.0000	1.0000
602	Uniform Force	Global Y	0.0940		0.0000	1.0000
603	Uniform Force	Global Y	0.0940		0.0000	1.0000
604	Uniform Force	Global Y	0.0940		0.0000	1.0000
605	Uniform Force	Global Y	0.0940		0.0000	1.0000
401	Uniform Force	Global Y	0.3900		0.0000	1.0000
402	Uniform Force	Global Y	0.3900		0.0000	1.0000
403	Uniform Force	Global Y	0.3900		0.0000	1.0000
405	Trapezoidal Force	Global Y	0.4900	0.4700	0.0000	1.0000
406	Trapezoidal Force	Global Y	0.4700	0.4500	0.0000	1.0000
407	Trapezoidal Force	Global Y	0.4500	0.4300	0.0000	1.0000
408	Trapezoidal Force	Global Y	0.4300	0.3900	0.0000	1.0000
409	Trapezoidal Force	Global Y	0.3900	0.3800	0.0000	1.0000
410	Trapezoidal Force	Global Y	0.3800	0.3600	0.0000	1.0000
411	Trapezoidal Force	Global Y	0.3600	0.3400	0.0000	1.0000
412	Trapezoidal Force	Global Y	0.3400	0.3200	0.0000	1.0000
413	Trapezoidal Force	Global Y	0.3200	0.3100	0.0000	1.0000
501	Uniform Force	Global X	-0.0250		0.0000	1.0000
502	Uniform Force	Global X	-0.0250		0.0000	1.0000
503	Uniform Force	Global X	-0.0250		0.0000	1.0000
504	Uniform Force	Global X	-0.0250		0.0000	1.0000
505	Uniform Force	Global X	-0.0250		0.0000	1.0000
601	Uniform Force	Global X	-0.0250		0.0000	1.0000
602	Uniform Force	Global X	-0.0250		0.0000	1.0000
603	Uniform Force	Global X	-0.0250		0.0000	1.0000
604	Uniform Force	Global X	-0.0250		0.0000	1.0000
605	Uniform Force	Global X	-0.0250		0.0000	1.0000
401	Uniform Force	Global X	-0.1100		0.0000	1.0000
402	Uniform Force	Global X	-0.1100		0.0000	1.0000
403	Uniform Force	Global X	-0.1100		0.0000	1.0000

LOAD CASE WS -15 deg, Member Loads

Member	Type	Direction	Magnitude at Start (kips or kips-ft)	Magnitude at End (kips or kips-ft)	Start Position (x/L)	End Position from start (x/L)
405	Trapezoidal Force	Global X	-0.1300	-0.1300	0.0000	1.0000
406	Trapezoidal Force	Global X	-0.1300	-0.1200	0.0000	1.0000
407	Trapezoidal Force	Global X	-0.1200	-0.1200	0.0000	1.0000
408	Trapezoidal Force	Global X	-0.1200	-0.1100	0.0000	1.0000
409	Trapezoidal Force	Global X	-0.1100	-0.1000	0.0000	1.0000
410	Trapezoidal Force	Global X	-0.1000	-0.1000	0.0000	1.0000
411	Trapezoidal Force	Global X	-0.1000	-0.0900	0.0000	1.0000
412	Trapezoidal Force	Global X	-0.0900	-0.0900	0.0000	1.0000
413	Trapezoidal Force	Global X	-0.0900	-0.0800	0.0000	1.0000

LOAD CASE LL1_Deck_Offset, Member Loads

Member	Type	Direction	Magnitude at Start (kips or kips-ft)	Magnitude at End (kips or kips-ft)	Start Position (x/L)	End Position from start (x/L)
1	Uniform Force	Global Z	-1.3500		0.0000	1.0000
2	Uniform Force	Global Z	-1.3500		0.0000	1.0000
3	Uniform Force	Global Z	-1.3500		0.0000	1.0000
4	Uniform Force	Global Z	-1.3500		0.0000	1.0000
5	Uniform Force	Global Z	-1.3500		0.0000	1.0000
6	Uniform Force	Global Z	-1.3500		0.0000	1.0000
7	Uniform Force	Global Z	-1.3500		0.0000	1.0000
8	Uniform Force	Global Z	-1.3500		0.0000	1.0000
9	Uniform Force	Global Z	-1.3500		0.0000	1.0000
10	Uniform Force	Global Z	-1.3500		0.0000	1.0000
11	Uniform Force	Global Z	-1.3500		0.0000	1.0000
12	Uniform Force	Global Z	-1.3500		0.0000	1.0000
13	Uniform Force	Global Z	-1.3500		0.0000	1.0000
14	Uniform Force	Global Z	-1.3500		0.0000	1.0000
15	Uniform Force	Global Z	-1.3500		0.0000	1.0000
16	Uniform Force	Global Z	-1.3500		0.0000	1.0000
17	Uniform Force	Global Z	-1.3500		0.0000	1.0000
18	Uniform Force	Global Z	-1.3500		0.0000	1.0000
19	Uniform Force	Global Z	-1.3500		0.0000	1.0000
20	Uniform Force	Global Z	-1.3500		0.0000	1.0000

LOAD CASE LL1 Deck Offset, Member Loads

Member	Type	Direction	Magnitude at Start (kips or kips-ft)	Magnitude at End (kips or kips-ft)	Start Position (x/L)	End Position from start (x/L)
21	Uniform Force	Global Z	-1.3500		0.0000	1.0000
22	Uniform Force	Global Z	-1.3500		0.0000	1.0000
23	Uniform Force	Global Z	-1.3500		0.0000	1.0000
24	Uniform Force	Global Z	-1.3500		0.0000	1.0000
25	Uniform Force	Global Z	-1.3500		0.0000	1.0000
26	Uniform Force	Global Z	-1.3500		0.0000	1.0000
27	Uniform Force	Global Z	-1.3500		0.0000	1.0000
28	Uniform Force	Global Z	-1.3500		0.0000	1.0000
29	Uniform Force	Global Z	-1.3500		0.0000	1.0000
30	Uniform Force	Global Z	-1.3500		0.0000	1.0000
31	Uniform Force	Global Z	-1.3500		0.0000	1.0000
32	Uniform Force	Global Z	-1.3500		0.0000	1.0000
33	Uniform Force	Global Z	-1.3500		0.0000	1.0000
34	Uniform Force	Global Z	-1.3500		0.0000	1.0000
35	Uniform Force	Global Z	-1.3500		0.0000	1.0000
36	Uniform Force	Global Z	-1.3500		0.0000	1.0000
37	Uniform Force	Global Z	-1.3500		0.0000	1.0000
38	Uniform Force	Global Z	-1.3500		0.0000	1.0000
39	Uniform Force	Global Z	-1.3500		0.0000	1.0000
40	Uniform Force	Global Z	-1.3500		0.0000	1.0000
41	Uniform Force	Global Z	-1.3500		0.0000	1.0000
42	Uniform Force	Global Z	-1.3500		0.0000	1.0000
43	Uniform Force	Global Z	-1.3500		0.0000	1.0000
44	Uniform Force	Global Z	-1.3500		0.0000	1.0000
45	Uniform Force	Global Z	-1.3500		0.0000	1.0000
46	Uniform Force	Global Z	-1.3500		0.0000	1.0000
47	Uniform Force	Global Z	-1.3500		0.0000	1.0000
48	Uniform Force	Global Z	-1.3500		0.0000	1.0000
49	Uniform Force	Global Z	-1.3500		0.0000	1.0000
50	Uniform Force	Global Z	-1.3500		0.0000	1.0000
51	Uniform Force	Global Z	-1.3500		0.0000	1.0000
52	Uniform Force	Global Z	-1.3500		0.0000	1.0000
53	Uniform Force	Global Z	-1.3500		0.0000	1.0000
54	Uniform Force	Global Z	-1.3500		0.0000	1.0000

LOAD CASE LL1 Deck Offset, Member Loads

Member	Type	Direction	Magnitude at Start (kips or kips-ft)	Magnitude at End (kips or kips-ft)	Start Position (x/L)	End Position from start (x/L)
55	Uniform Force	Global Z	-1.3500		0.0000	1.0000
56	Uniform Force	Global Z	-1.3500		0.0000	1.0000
57	Uniform Force	Global Z	-1.3500		0.0000	1.0000
1	Uniform Moment	Global X	-10.1300		0.0000	1.0000
2	Uniform Moment	Global X	-10.1300		0.0000	1.0000
3	Uniform Moment	Global X	-10.1300		0.0000	1.0000
4	Uniform Moment	Global X	-10.1300		0.0000	1.0000
5	Uniform Moment	Global X	-10.1300		0.0000	1.0000
6	Uniform Moment	Global X	-10.1300		0.0000	1.0000
7	Uniform Moment	Global X	-10.1300		0.0000	1.0000
8	Uniform Moment	Global X	-10.1300		0.0000	1.0000
9	Uniform Moment	Global X	-10.1300		0.0000	1.0000
10	Uniform Moment	Global X	-10.1300		0.0000	1.0000
11	Uniform Moment	Global X	-10.1300		0.0000	1.0000
12	Uniform Moment	Global X	-10.1300		0.0000	1.0000
13	Uniform Moment	Global X	-10.1300		0.0000	1.0000
14	Uniform Moment	Global X	-10.1300		0.0000	1.0000
15	Uniform Moment	Global X	-10.1300		0.0000	1.0000
16	Uniform Moment	Global X	-10.1300		0.0000	1.0000
17	Uniform Moment	Global X	-10.1300		0.0000	1.0000
18	Uniform Moment	Global X	-10.1300		0.0000	1.0000
19	Uniform Moment	Global X	-10.1300		0.0000	1.0000
20	Uniform Moment	Global X	-10.1300		0.0000	1.0000
21	Uniform Moment	Global X	-10.1300		0.0000	1.0000
22	Uniform Moment	Global X	-10.1300		0.0000	1.0000
23	Uniform Moment	Global X	-10.1300		0.0000	1.0000
24	Uniform Moment	Global X	-10.1300		0.0000	1.0000
25	Uniform Moment	Global X	-10.1300		0.0000	1.0000
26	Uniform Moment	Global X	-10.1300		0.0000	1.0000
27	Uniform Moment	Global X	-10.1300		0.0000	1.0000
28	Uniform Moment	Global X	-10.1300		0.0000	1.0000
29	Uniform Moment	Global X	-10.1300		0.0000	1.0000
30	Uniform Moment	Global X	-10.1300		0.0000	1.0000
31	Uniform Moment	Global X	-10.1300		0.0000	1.0000

LOAD CASE LL1 Deck Offset, Member Loads

Member	Type	Direction	Magnitude at Start (kips or kips-ft)	Magnitude at End (kips or kips-ft)	Start Position (x/L)	End Position from start (x/L)
32	Uniform Moment	Global X	-10.1300		0.0000	1.0000
33	Uniform Moment	Global X	-10.1300		0.0000	1.0000
34	Uniform Moment	Global X	-10.1300		0.0000	1.0000
35	Uniform Moment	Global X	-10.1300		0.0000	1.0000
36	Uniform Moment	Global X	-10.1300		0.0000	1.0000
37	Uniform Moment	Global X	-10.1300		0.0000	1.0000
38	Uniform Moment	Global X	-10.1300		0.0000	1.0000
39	Uniform Moment	Global X	-10.1300		0.0000	1.0000
40	Uniform Moment	Global X	-10.1300		0.0000	1.0000
41	Uniform Moment	Global X	-10.1300		0.0000	1.0000
42	Uniform Moment	Global X	-10.1300		0.0000	1.0000
43	Uniform Moment	Global X	-10.1300		0.0000	1.0000
44	Uniform Moment	Global X	-10.1300		0.0000	1.0000
45	Uniform Moment	Global X	-10.1300		0.0000	1.0000
46	Uniform Moment	Global X	-10.1300		0.0000	1.0000
47	Uniform Moment	Global X	-10.1300		0.0000	1.0000
48	Uniform Moment	Global X	-10.1300		0.0000	1.0000
49	Uniform Moment	Global X	-10.1300		0.0000	1.0000
50	Uniform Moment	Global X	-10.1300		0.0000	1.0000
51	Uniform Moment	Global X	-10.1300		0.0000	1.0000
52	Uniform Moment	Global X	-10.1300		0.0000	1.0000
53	Uniform Moment	Global X	-10.1300		0.0000	1.0000
54	Uniform Moment	Global X	-10.1300		0.0000	1.0000
55	Uniform Moment	Global X	-10.1300		0.0000	1.0000
56	Uniform Moment	Global X	-10.1300		0.0000	1.0000
57	Uniform Moment	Global X	-10.1300		0.0000	1.0000

LOAD CASE LL2_Deck_Offset, Member Loads

Member	Type	Direction	Magnitude at Start (kips or kips-ft)	Magnitude at End (kips or kips-ft)	Start Position (x/L)	End Position from start (x/L)
1	Uniform Force	Global Z	-1.3500		0.0000	1.0000
2	Uniform Force	Global Z	-1.3500		0.0000	1.0000
3	Uniform Force	Global Z	-1.3500		0.0000	1.0000

LOAD CASE LL2 Deck Offset, Member Loads

Member	Type	Direction	Magnitude at Start (kips or kips-ft)	Magnitude at End (kips or kips-ft)	Start Position (x/L)	End Position from start (x/L)
4	Uniform Force	Global Z	-1.3500		0.0000	1.0000
5	Uniform Force	Global Z	-1.3500		0.0000	1.0000
6	Uniform Force	Global Z	-1.3500		0.0000	1.0000
7	Uniform Force	Global Z	-1.3500		0.0000	1.0000
8	Uniform Force	Global Z	-1.3500		0.0000	1.0000
9	Uniform Force	Global Z	-1.3500		0.0000	1.0000
10	Uniform Force	Global Z	-1.3500		0.0000	1.0000
11	Uniform Force	Global Z	-1.3500		0.0000	1.0000
12	Uniform Force	Global Z	-1.3500		0.0000	1.0000
13	Uniform Force	Global Z	-1.3500		0.0000	1.0000
14	Uniform Force	Global Z	-1.3500		0.0000	1.0000
15	Uniform Force	Global Z	-1.3500		0.0000	1.0000
16	Uniform Force	Global Z	-1.3500		0.0000	1.0000
17	Uniform Force	Global Z	-1.3500		0.0000	1.0000
18	Uniform Force	Global Z	-1.3500		0.0000	1.0000
19	Uniform Force	Global Z	-1.3500		0.0000	1.0000
20	Uniform Force	Global Z	-1.3500		0.0000	1.0000
21	Uniform Force	Global Z	-1.3500		0.0000	1.0000
22	Uniform Force	Global Z	-1.3500		0.0000	1.0000
23	Uniform Force	Global Z	-1.3500		0.0000	1.0000
24	Uniform Force	Global Z	-1.3500		0.0000	1.0000
25	Uniform Force	Global Z	-1.3500		0.0000	1.0000
26	Uniform Force	Global Z	-1.3500		0.0000	1.0000
27	Uniform Force	Global Z	-1.3500		0.0000	1.0000
1	Uniform Moment	Global X	-10.1300		0.0000	1.0000
2	Uniform Moment	Global X	-10.1300		0.0000	1.0000
3	Uniform Moment	Global X	-10.1300		0.0000	1.0000
4	Uniform Moment	Global X	-10.1300		0.0000	1.0000
5	Uniform Moment	Global X	-10.1300		0.0000	1.0000
6	Uniform Moment	Global X	-10.1300		0.0000	1.0000
7	Uniform Moment	Global X	-10.1300		0.0000	1.0000
8	Uniform Moment	Global X	-10.1300		0.0000	1.0000
9	Uniform Moment	Global X	-10.1300		0.0000	1.0000
10	Uniform Moment	Global X	-10.1300		0.0000	1.0000

LOAD CASE LL2 Deck Offset, Member Loads

Member	Type	Direction	Magnitude at Start (kips or kips-ft)	Magnitude at End (kips or kips-ft)	Start Position (x/L)	End Position from start (x/L)
11	Uniform Moment	Global X	-10.1300		0.0000	1.0000
12	Uniform Moment	Global X	-10.1300		0.0000	1.0000
13	Uniform Moment	Global X	-10.1300		0.0000	1.0000
14	Uniform Moment	Global X	-10.1300		0.0000	1.0000
15	Uniform Moment	Global X	-10.1300		0.0000	1.0000
16	Uniform Moment	Global X	-10.1300		0.0000	1.0000
17	Uniform Moment	Global X	-10.1300		0.0000	1.0000
18	Uniform Moment	Global X	-10.1300		0.0000	1.0000
19	Uniform Moment	Global X	-10.1300		0.0000	1.0000
20	Uniform Moment	Global X	-10.1300		0.0000	1.0000
21	Uniform Moment	Global X	-10.1300		0.0000	1.0000
22	Uniform Moment	Global X	-10.1300		0.0000	1.0000
23	Uniform Moment	Global X	-10.1300		0.0000	1.0000
24	Uniform Moment	Global X	-10.1300		0.0000	1.0000
25	Uniform Moment	Global X	-10.1300		0.0000	1.0000
26	Uniform Moment	Global X	-10.1300		0.0000	1.0000
27	Uniform Moment	Global X	-10.1300		0.0000	1.0000

LOAD CASE LL3_Deck_Offset, Member Loads

Member	Type	Direction	Magnitude at Start (kips or kips-ft)	Magnitude at End (kips or kips-ft)	Start Position (x/L)	End Position from start (x/L)
28	Uniform Force	Global Z	-1.3500		0.0000	1.0000
29	Uniform Force	Global Z	-1.3500		0.0000	1.0000
30	Uniform Force	Global Z	-1.3500		0.0000	1.0000
31	Uniform Force	Global Z	-1.3500		0.0000	1.0000
32	Uniform Force	Global Z	-1.3500		0.0000	1.0000
33	Uniform Force	Global Z	-1.3500		0.0000	1.0000
34	Uniform Force	Global Z	-1.3500		0.0000	1.0000
35	Uniform Force	Global Z	-1.3500		0.0000	1.0000
36	Uniform Force	Global Z	-1.3500		0.0000	1.0000
37	Uniform Force	Global Z	-1.3500		0.0000	1.0000
38	Uniform Force	Global Z	-1.3500		0.0000	1.0000
39	Uniform Force	Global Z	-1.3500		0.0000	1.0000

LOAD CASE LL3 Deck Offset, Member Loads

Member	Type	Direction	Magnitude at Start (kips or kips-ft)	Magnitude at End (kips or kips-ft)	Start Position (x/L)	End Position from start (x/L)
40	Uniform Force	Global Z	-1.3500		0.0000	1.0000
41	Uniform Force	Global Z	-1.3500		0.0000	1.0000
42	Uniform Force	Global Z	-1.3500		0.0000	1.0000
43	Uniform Force	Global Z	-1.3500		0.0000	1.0000
44	Uniform Force	Global Z	-1.3500		0.0000	1.0000
45	Uniform Force	Global Z	-1.3500		0.0000	1.0000
46	Uniform Force	Global Z	-1.3500		0.0000	1.0000
47	Uniform Force	Global Z	-1.3500		0.0000	1.0000
48	Uniform Force	Global Z	-1.3500		0.0000	1.0000
49	Uniform Force	Global Z	-1.3500		0.0000	1.0000
50	Uniform Force	Global Z	-1.3500		0.0000	1.0000
51	Uniform Force	Global Z	-1.3500		0.0000	1.0000
52	Uniform Force	Global Z	-1.3500		0.0000	1.0000
53	Uniform Force	Global Z	-1.3500		0.0000	1.0000
54	Uniform Force	Global Z	-1.3500		0.0000	1.0000
55	Uniform Force	Global Z	-1.3500		0.0000	1.0000
56	Uniform Force	Global Z	-1.3500		0.0000	1.0000
57	Uniform Force	Global Z	-1.3500		0.0000	1.0000
28	Uniform Moment	Global X	-10.1300		0.0000	1.0000
29	Uniform Moment	Global X	-10.1300		0.0000	1.0000
30	Uniform Moment	Global X	-10.1300		0.0000	1.0000
31	Uniform Moment	Global X	-10.1300		0.0000	1.0000
32	Uniform Moment	Global X	-10.1300		0.0000	1.0000
33	Uniform Moment	Global X	-10.1300		0.0000	1.0000
34	Uniform Moment	Global X	-10.1300		0.0000	1.0000
35	Uniform Moment	Global X	-10.1300		0.0000	1.0000
36	Uniform Moment	Global X	-10.1300		0.0000	1.0000
37	Uniform Moment	Global X	-10.1300		0.0000	1.0000
38	Uniform Moment	Global X	-10.1300		0.0000	1.0000
39	Uniform Moment	Global X	-10.1300		0.0000	1.0000
40	Uniform Moment	Global X	-10.1300		0.0000	1.0000
41	Uniform Moment	Global X	-10.1300		0.0000	1.0000
42	Uniform Moment	Global X	-10.1300		0.0000	1.0000
43	Uniform Moment	Global X	-10.1300		0.0000	1.0000

LOAD CASE LL3 Deck Offset, Member Loads

Member	Type	Direction	Magnitude at Start (kips or kips-ft)	Magnitude at End (kips or kips-ft)	Start Position (x/L)	End Position from start (x/L)
44	Uniform Moment	Global X	-10.1300		0.0000	1.0000
45	Uniform Moment	Global X	-10.1300		0.0000	1.0000
46	Uniform Moment	Global X	-10.1300		0.0000	1.0000
47	Uniform Moment	Global X	-10.1300		0.0000	1.0000
48	Uniform Moment	Global X	-10.1300		0.0000	1.0000
49	Uniform Moment	Global X	-10.1300		0.0000	1.0000
50	Uniform Moment	Global X	-10.1300		0.0000	1.0000
51	Uniform Moment	Global X	-10.1300		0.0000	1.0000
52	Uniform Moment	Global X	-10.1300		0.0000	1.0000
53	Uniform Moment	Global X	-10.1300		0.0000	1.0000
54	Uniform Moment	Global X	-10.1300		0.0000	1.0000
55	Uniform Moment	Global X	-10.1300		0.0000	1.0000
56	Uniform Moment	Global X	-10.1300		0.0000	1.0000
57	Uniform Moment	Global X	-10.1300		0.0000	1.0000

LOAD CASE CT_0 deg, Member Loads

Member	Type	Direction	Magnitude at Start (kips or kips-ft)	Magnitude at End (kips or kips-ft)	Start Position (x/L)	End Position from start (x/L)
1018	Point Force	Global Y	600.0000		0.8500	
2003	Point Force	Global Y	600.0000		0.3700	
3019	Point Force	Global Y	600.0000		0.1300	

LOAD CASE CT_15 deg, Member Loads

Member	Type	Direction	Magnitude at Start (kips or kips-ft)	Magnitude at End (kips or kips-ft)	Start Position (x/L)	End Position from start (x/L)
1018	Point Force	Global Y	579.6000		0.8500	
1018	Point Force	Global X	155.3000		0.8500	
2003	Point Force	Global Y	579.6000		0.3700	
2003	Point Force	Global X	155.3000		0.3700	
3019	Point Force	Global Y	579.6000		0.1300	
3019	Point Force	Global X	155.3000		0.1300	

LOAD CASE WS 0 deg 70mph, Member Loads

Member	Type	Direction	Magnitude at Start (kips or kips-ft)	Magnitude at End (kips or kips-ft)	Start Position (x/L)	End Position from start (x/L)
1	Uniform Force	Global Y	0.2700		0.0000	1.0000
2	Uniform Force	Global Y	0.2700		0.0000	1.0000
3	Uniform Force	Global Y	0.2700		0.0000	1.0000
4	Uniform Force	Global Y	0.2700		0.0000	1.0000
5	Uniform Force	Global Y	0.2700		0.0000	1.0000
6	Uniform Force	Global Y	0.2700		0.0000	1.0000
7	Uniform Force	Global Y	0.2700		0.0000	1.0000
8	Uniform Force	Global Y	0.2700		0.0000	1.0000
9	Uniform Force	Global Y	0.2700		0.0000	1.0000
10	Uniform Force	Global Y	0.2700		0.0000	1.0000
11	Uniform Force	Global Y	0.2700		0.0000	1.0000
12	Uniform Force	Global Y	0.2700		0.0000	1.0000
13	Uniform Force	Global Y	0.2700		0.0000	1.0000
14	Uniform Force	Global Y	0.2700		0.0000	1.0000
15	Uniform Force	Global Y	0.2700		0.0000	1.0000
16	Uniform Force	Global Y	0.2700		0.0000	1.0000
17	Uniform Force	Global Y	0.2700		0.0000	1.0000
18	Uniform Force	Global Y	0.2700		0.0000	1.0000
19	Uniform Force	Global Y	0.2700		0.0000	1.0000
20	Uniform Force	Global Y	0.2700		0.0000	1.0000
21	Uniform Force	Global Y	0.2700		0.0000	1.0000
22	Uniform Force	Global Y	0.2700		0.0000	1.0000
23	Uniform Force	Global Y	0.2700		0.0000	1.0000
24	Uniform Force	Global Y	0.2700		0.0000	1.0000
25	Uniform Force	Global Y	0.2700		0.0000	1.0000
26	Uniform Force	Global Y	0.2700		0.0000	1.0000
27	Uniform Force	Global Y	0.2700		0.0000	1.0000
28	Uniform Force	Global Y	0.2700		0.0000	1.0000
29	Uniform Force	Global Y	0.2700		0.0000	1.0000
30	Uniform Force	Global Y	0.2700		0.0000	1.0000
31	Uniform Force	Global Y	0.2700		0.0000	1.0000
32	Uniform Force	Global Y	0.2700		0.0000	1.0000

LOAD CASE WS 0 deg 70mph, Member Loads

Member	Type	Direction	Magnitude at Start (kips or kips-ft)	Magnitude at End (kips or kips-ft)	Start Position (x/L)	End Position from start (x/L)
33	Uniform Force	Global Y	0.2700		0.0000	1.0000
34	Uniform Force	Global Y	0.2700		0.0000	1.0000
35	Uniform Force	Global Y	0.2700		0.0000	1.0000
36	Uniform Force	Global Y	0.2700		0.0000	1.0000
37	Uniform Force	Global Y	0.2700		0.0000	1.0000
38	Uniform Force	Global Y	0.2700		0.0000	1.0000
39	Uniform Force	Global Y	0.2700		0.0000	1.0000
40	Uniform Force	Global Y	0.2700		0.0000	1.0000
41	Uniform Force	Global Y	0.2700		0.0000	1.0000
42	Uniform Force	Global Y	0.2700		0.0000	1.0000
43	Uniform Force	Global Y	0.2700		0.0000	1.0000
44	Uniform Force	Global Y	0.2700		0.0000	1.0000
45	Uniform Force	Global Y	0.2700		0.0000	1.0000
46	Uniform Force	Global Y	0.2700		0.0000	1.0000
47	Uniform Force	Global Y	0.2700		0.0000	1.0000
48	Uniform Force	Global Y	0.2700		0.0000	1.0000
49	Uniform Force	Global Y	0.2700		0.0000	1.0000
50	Uniform Force	Global Y	0.2700		0.0000	1.0000
51	Uniform Force	Global Y	0.2700		0.0000	1.0000
52	Uniform Force	Global Y	0.2700		0.0000	1.0000
53	Uniform Force	Global Y	0.2700		0.0000	1.0000
54	Uniform Force	Global Y	0.2700		0.0000	1.0000
55	Uniform Force	Global Y	0.2700		0.0000	1.0000
56	Uniform Force	Global Y	0.2700		0.0000	1.0000
57	Uniform Force	Global Y	0.2700		0.0000	1.0000
101	Uniform Force	Global Y	0.0300		0.0000	1.0000
102	Uniform Force	Global Y	0.0300		0.0000	1.0000
103	Uniform Force	Global Y	0.0300		0.0000	1.0000
104	Uniform Force	Global Y	0.0300		0.0000	1.0000
105	Uniform Force	Global Y	0.0300		0.0000	1.0000
106	Uniform Force	Global Y	0.0300		0.0000	1.0000
107	Uniform Force	Global Y	0.0300		0.0000	1.0000
108	Uniform Force	Global Y	0.0300		0.0000	1.0000
109	Uniform Force	Global Y	0.0300		0.0000	1.0000

LOAD CASE WS 0 deg 70mph, Member Loads

Member	Type	Direction	Magnitude at Start (kips or kips-ft)	Magnitude at End (kips or kips-ft)	Start Position (x/L)	End Position from start (x/L)
110	Uniform Force	Global Y	0.0300		0.0000	1.0000
111	Uniform Force	Global Y	0.0300		0.0000	1.0000
112	Uniform Force	Global Y	0.0300		0.0000	1.0000
113	Uniform Force	Global Y	0.0300		0.0000	1.0000
114	Uniform Force	Global Y	0.0300		0.0000	1.0000
115	Uniform Force	Global Y	0.0300		0.0000	1.0000
116	Uniform Force	Global Y	0.0300		0.0000	1.0000
117	Uniform Force	Global Y	0.0300		0.0000	1.0000
118	Uniform Force	Global Y	0.0300		0.0000	1.0000
119	Uniform Force	Global Y	0.0300		0.0000	1.0000
120	Uniform Force	Global Y	0.0300		0.0000	1.0000
121	Uniform Force	Global Y	0.0300		0.0000	1.0000
122	Uniform Force	Global Y	0.0300		0.0000	1.0000
123	Uniform Force	Global Y	0.0300		0.0000	1.0000
124	Uniform Force	Global Y	0.0300		0.0000	1.0000
125	Uniform Force	Global Y	0.0300		0.0000	1.0000
126	Uniform Force	Global Y	0.0300		0.0000	1.0000
127	Uniform Force	Global Y	0.0300		0.0000	1.0000
128	Uniform Force	Global Y	0.0300		0.0000	1.0000
129	Uniform Force	Global Y	0.0300		0.0000	1.0000
130	Uniform Force	Global Y	0.0300		0.0000	1.0000
131	Uniform Force	Global Y	0.0300		0.0000	1.0000
132	Uniform Force	Global Y	0.0300		0.0000	1.0000
133	Uniform Force	Global Y	0.0300		0.0000	1.0000
134	Uniform Force	Global Y	0.0300		0.0000	1.0000
135	Uniform Force	Global Y	0.0300		0.0000	1.0000
136	Uniform Force	Global Y	0.0300		0.0000	1.0000
137	Uniform Force	Global Y	0.0300		0.0000	1.0000
138	Uniform Force	Global Y	0.0300		0.0000	1.0000
139	Uniform Force	Global Y	0.0300		0.0000	1.0000
140	Uniform Force	Global Y	0.0300		0.0000	1.0000
141	Uniform Force	Global Y	0.0300		0.0000	1.0000
142	Uniform Force	Global Y	0.0300		0.0000	1.0000
143	Uniform Force	Global Y	0.0300		0.0000	1.0000

LOAD CASE WS 0 deg 70mph, Member Loads

Member	Type	Direction	Magnitude at Start (kips or kips-ft)	Magnitude at End (kips or kips-ft)	Start Position (x/L)	End Position from start (x/L)
144	Uniform Force	Global Y	0.0300		0.0000	1.0000
145	Uniform Force	Global Y	0.0300		0.0000	1.0000
146	Uniform Force	Global Y	0.0300		0.0000	1.0000
147	Uniform Force	Global Y	0.0300		0.0000	1.0000
148	Uniform Force	Global Y	0.0300		0.0000	1.0000
149	Uniform Force	Global Y	0.0300		0.0000	1.0000
150	Uniform Force	Global Y	0.0300		0.0000	1.0000
151	Uniform Force	Global Y	0.0300		0.0000	1.0000
152	Uniform Force	Global Y	0.0300		0.0000	1.0000
153	Uniform Force	Global Y	0.0300		0.0000	1.0000
154	Uniform Force	Global Y	0.0300		0.0000	1.0000
155	Uniform Force	Global Y	0.0300		0.0000	1.0000
156	Uniform Force	Global Y	0.0300		0.0000	1.0000
157	Uniform Force	Global Y	0.0300		0.0000	1.0000
158	Uniform Force	Global Y	0.0300		0.0000	1.0000
159	Uniform Force	Global Y	0.0300		0.0000	1.0000
160	Uniform Force	Global Y	0.0300		0.0000	1.0000
701	Uniform Force	Global Y	0.0300		0.0000	1.0000
702	Uniform Force	Global Y	0.0300		0.0000	1.0000
703	Uniform Force	Global Y	0.0300		0.0000	1.0000
704	Uniform Force	Global Y	0.0300		0.0000	1.0000
705	Uniform Force	Global Y	0.0300		0.0000	1.0000
706	Uniform Force	Global Y	0.0300		0.0000	1.0000
707	Uniform Force	Global Y	0.0300		0.0000	1.0000
708	Uniform Force	Global Y	0.0300		0.0000	1.0000
709	Uniform Force	Global Y	0.0300		0.0000	1.0000
710	Uniform Force	Global Y	0.0300		0.0000	1.0000
711	Uniform Force	Global Y	0.0300		0.0000	1.0000
712	Uniform Force	Global Y	0.0300		0.0000	1.0000
713	Uniform Force	Global Y	0.0300		0.0000	1.0000
714	Uniform Force	Global Y	0.0300		0.0000	1.0000
715	Uniform Force	Global Y	0.0300		0.0000	1.0000
716	Uniform Force	Global Y	0.0300		0.0000	1.0000
717	Uniform Force	Global Y	0.0300		0.0000	1.0000

LOAD CASE WS 0 deg 70mph, Member Loads

Member	Type	Direction	Magnitude at Start (kips or kips-ft)	Magnitude at End (kips or kips-ft)	Start Position (x/L)	End Position from start (x/L)
718	Uniform Force	Global Y	0.0300		0.0000	1.0000
719	Uniform Force	Global Y	0.0300		0.0000	1.0000
720	Uniform Force	Global Y	0.0300		0.0000	1.0000
721	Uniform Force	Global Y	0.0300		0.0000	1.0000
722	Uniform Force	Global Y	0.0300		0.0000	1.0000
723	Uniform Force	Global Y	0.0300		0.0000	1.0000
724	Uniform Force	Global Y	0.0300		0.0000	1.0000
725	Uniform Force	Global Y	0.0300		0.0000	1.0000
726	Uniform Force	Global Y	0.0300		0.0000	1.0000
727	Uniform Force	Global Y	0.0300		0.0000	1.0000
728	Uniform Force	Global Y	0.0300		0.0000	1.0000
729	Uniform Force	Global Y	0.0300		0.0000	1.0000
730	Uniform Force	Global Y	0.0300		0.0000	1.0000
731	Uniform Force	Global Y	0.0300		0.0000	1.0000
732	Uniform Force	Global Y	0.0300		0.0000	1.0000
733	Uniform Force	Global Y	0.0300		0.0000	1.0000
740	Uniform Force	Global Y	0.0300		0.0000	1.0000
741	Uniform Force	Global Y	0.0300		0.0000	1.0000
742	Uniform Force	Global Y	0.0300		0.0000	1.0000
743	Uniform Force	Global Y	0.0300		0.0000	1.0000
744	Uniform Force	Global Y	0.0300		0.0000	1.0000
745	Uniform Force	Global Y	0.0300		0.0000	1.0000
746	Uniform Force	Global Y	0.0300		0.0000	1.0000
747	Uniform Force	Global Y	0.0300		0.0000	1.0000
748	Uniform Force	Global Y	0.0300		0.0000	1.0000
749	Uniform Force	Global Y	0.0300		0.0000	1.0000
750	Uniform Force	Global Y	0.0300		0.0000	1.0000
751	Uniform Force	Global Y	0.0300		0.0000	1.0000
752	Uniform Force	Global Y	0.0300		0.0000	1.0000
753	Uniform Force	Global Y	0.0300		0.0000	1.0000
754	Uniform Force	Global Y	0.0300		0.0000	1.0000
755	Uniform Force	Global Y	0.0300		0.0000	1.0000
756	Uniform Force	Global Y	0.0300		0.0000	1.0000
757	Uniform Force	Global Y	0.0300		0.0000	1.0000

LOAD CASE WS 0 deg 70mph, Member Loads

Member	Type	Direction	Magnitude at Start (kips or kips-ft)	Magnitude at End (kips or kips-ft)	Start Position (x/L)	End Position from start (x/L)
758	Uniform Force	Global Y	0.0300		0.0000	1.0000
759	Uniform Force	Global Y	0.0300		0.0000	1.0000
760	Uniform Force	Global Y	0.0300		0.0000	1.0000
761	Uniform Force	Global Y	0.0300		0.0000	1.0000
762	Uniform Force	Global Y	0.0300		0.0000	1.0000
763	Uniform Force	Global Y	0.0300		0.0000	1.0000
764	Uniform Force	Global Y	0.0300		0.0000	1.0000
765	Uniform Force	Global Y	0.0300		0.0000	1.0000
766	Uniform Force	Global Y	0.0300		0.0000	1.0000
767	Uniform Force	Global Y	0.0300		0.0000	1.0000
768	Uniform Force	Global Y	0.0300		0.0000	1.0000
769	Uniform Force	Global Y	0.0300		0.0000	1.0000
770	Uniform Force	Global Y	0.0300		0.0000	1.0000
771	Uniform Force	Global Y	0.0300		0.0000	1.0000
772	Uniform Force	Global Y	0.0300		0.0000	1.0000
1	Uniform Moment	Local x	-0.9600		0.0000	1.0000
2	Uniform Moment	Local x	-0.9600		0.0000	1.0000
3	Uniform Moment	Local x	-0.9600		0.0000	1.0000
4	Uniform Moment	Local x	-0.9600		0.0000	1.0000
5	Uniform Moment	Local x	-0.9600		0.0000	1.0000
6	Uniform Moment	Local x	-0.9600		0.0000	1.0000
7	Uniform Moment	Local x	-0.9600		0.0000	1.0000
8	Uniform Moment	Local x	-0.9600		0.0000	1.0000
9	Uniform Moment	Local x	-0.9600		0.0000	1.0000
10	Uniform Moment	Local x	-0.9600		0.0000	1.0000
11	Uniform Moment	Local x	-0.9600		0.0000	1.0000
12	Uniform Moment	Local x	-0.9600		0.0000	1.0000
13	Uniform Moment	Local x	-0.9600		0.0000	1.0000
14	Uniform Moment	Local x	-0.9600		0.0000	1.0000
15	Uniform Moment	Local x	-0.9600		0.0000	1.0000
16	Uniform Moment	Local x	-0.9600		0.0000	1.0000
17	Uniform Moment	Local x	-0.9600		0.0000	1.0000
18	Uniform Moment	Local x	-0.9600		0.0000	1.0000
19	Uniform Moment	Local x	-0.9600		0.0000	1.0000

LOAD CASE WS 0 deg 70mph, Member Loads

Member	Type	Direction	Magnitude at Start (kips or kips-ft)	Magnitude at End (kips or kips-ft)	Start Position (x/L)	End Position from start (x/L)
20	Uniform Moment	Local x	-0.9600		0.0000	1.0000
21	Uniform Moment	Local x	-0.9600		0.0000	1.0000
22	Uniform Moment	Local x	-0.9600		0.0000	1.0000
23	Uniform Moment	Local x	-0.9600		0.0000	1.0000
24	Uniform Moment	Local x	-0.9600		0.0000	1.0000
25	Uniform Moment	Local x	-0.9600		0.0000	1.0000
26	Uniform Moment	Local x	-0.9600		0.0000	1.0000
27	Uniform Moment	Local x	-0.9600		0.0000	1.0000
28	Uniform Moment	Local x	-0.9600		0.0000	1.0000
29	Uniform Moment	Local x	-0.9600		0.0000	1.0000
30	Uniform Moment	Local x	-0.9600		0.0000	1.0000
31	Uniform Moment	Local x	-0.9600		0.0000	1.0000
32	Uniform Moment	Local x	-0.9600		0.0000	1.0000
33	Uniform Moment	Local x	-0.9600		0.0000	1.0000
34	Uniform Moment	Local x	-0.9600		0.0000	1.0000
35	Uniform Moment	Local x	-0.9600		0.0000	1.0000
36	Uniform Moment	Local x	-0.9600		0.0000	1.0000
37	Uniform Moment	Local x	-0.9600		0.0000	1.0000
38	Uniform Moment	Local x	-0.9600		0.0000	1.0000
39	Uniform Moment	Local x	-0.9600		0.0000	1.0000
40	Uniform Moment	Local x	-0.9600		0.0000	1.0000
41	Uniform Moment	Local x	-0.9600		0.0000	1.0000
42	Uniform Moment	Local x	-0.9600		0.0000	1.0000
43	Uniform Moment	Local x	-0.9600		0.0000	1.0000
44	Uniform Moment	Local x	-0.9600		0.0000	1.0000
45	Uniform Moment	Local x	-0.9600		0.0000	1.0000
46	Uniform Moment	Local x	-0.9600		0.0000	1.0000
47	Uniform Moment	Local x	-0.9600		0.0000	1.0000
48	Uniform Moment	Local x	-0.9600		0.0000	1.0000
49	Uniform Moment	Local x	-0.9600		0.0000	1.0000
50	Uniform Moment	Local x	-0.9600		0.0000	1.0000
51	Uniform Moment	Local x	-0.9600		0.0000	1.0000
52	Uniform Moment	Local x	-0.9600		0.0000	1.0000
53	Uniform Moment	Local x	-0.9600		0.0000	1.0000

LOAD CASE WS 0 deg 70mph, Member Loads

Member	Type	Direction	Magnitude at Start (kips or kips-ft)	Magnitude at End (kips or kips-ft)	Start Position (x/L)	End Position from start (x/L)
54	Uniform Moment	Local x	-0.9600		0.0000	1.0000
55	Uniform Moment	Local x	-0.9600		0.0000	1.0000
56	Uniform Moment	Local x	-0.9600		0.0000	1.0000
57	Uniform Moment	Local x	-0.9600		0.0000	1.0000
2002	Uniform Force	Global Y	0.0870		0.0000	1.0000
2003	Uniform Force	Global Y	0.0870		0.0000	1.0000
1017	Uniform Force	Global Y	0.0725		0.0000	1.0000
1018	Uniform Force	Global Y	0.0725		0.0000	1.0000
1019	Uniform Force	Global Y	0.0725		0.0000	1.0000
1013	Uniform Force	Global Y	0.0725		0.0000	1.0000
1014	Uniform Force	Global Y	0.0725		0.0000	1.0000
1015	Uniform Force	Global Y	0.0725		0.0000	1.0000
3017	Uniform Force	Global Y	0.0725		0.0000	1.0000
3018	Uniform Force	Global Y	0.0725		0.0000	1.0000
3019	Uniform Force	Global Y	0.0725		0.0000	1.0000
3013	Uniform Force	Global Y	0.0725		0.0000	1.0000
3014	Uniform Force	Global Y	0.0725		0.0000	1.0000
3015	Uniform Force	Global Y	0.0725		0.0000	1.0000
501	Uniform Force	Global Y	0.0210		0.0000	1.0000
502	Uniform Force	Global Y	0.0210		0.0000	1.0000
503	Uniform Force	Global Y	0.0210		0.0000	1.0000
504	Uniform Force	Global Y	0.0210		0.0000	1.0000
505	Uniform Force	Global Y	0.0210		0.0000	1.0000
601	Uniform Force	Global Y	0.0210		0.0000	1.0000
602	Uniform Force	Global Y	0.0210		0.0000	1.0000
603	Uniform Force	Global Y	0.0210		0.0000	1.0000
604	Uniform Force	Global Y	0.0210		0.0000	1.0000
605	Uniform Force	Global Y	0.0210		0.0000	1.0000
401	Uniform Force	Global Y	0.0870		0.0000	1.0000
402	Uniform Force	Global Y	0.0870		0.0000	1.0000
403	Uniform Force	Global Y	0.0870		0.0000	1.0000
405	Trapezoidal Force	Global Y	0.1100	0.1100	0.0000	1.0000
406	Trapezoidal Force	Global Y	0.1100	0.1000	0.0000	1.0000
407	Trapezoidal Force	Global Y	0.1000	0.1000	0.0000	1.0000

LOAD CASE WS_0 deg_70mph, Member Loads

Member	Type	Direction	Magnitude at Start (kips or kips-ft)	Magnitude at End (kips or kips-ft)	Start Position (x/L)	End Position from start (x/L)
408	Trapezoidal Force	Global Y	0.1000	0.0900	0.0000	1.0000
409	Trapezoidal Force	Global Y	0.0900	0.0900	0.0000	1.0000
410	Trapezoidal Force	Global Y	0.0900	0.0800	0.0000	1.0000
411	Trapezoidal Force	Global Y	0.0800	0.0800	0.0000	1.0000
412	Trapezoidal Force	Global Y	0.0800	0.0700	0.0000	1.0000
413	Trapezoidal Force	Global Y	0.0700	0.0700	0.0000	1.0000
106	Point Force	Global Y	0.1900		0.0000	
111	Point Force	Global Y	0.1400		0.0000	
116	Point Force	Global Y	0.1400		0.0000	
121	Point Force	Global Y	0.1400		0.0000	
126	Point Force	Global Y	0.1400		0.0000	
136	Point Force	Global Y	0.1400		0.0000	
141	Point Force	Global Y	0.1400		0.0000	
146	Point Force	Global Y	0.1400		0.0000	
151	Point Force	Global Y	0.1400		0.0000	
156	Point Force	Global Y	0.1400		0.0000	

LOAD CASE WS_60 deg_70mph, Member Loads

Member	Type	Direction	Magnitude at Start (kips or kips-ft)	Magnitude at End (kips or kips-ft)	Start Position (x/L)	End Position from start (x/L)
1	Uniform Force	Global Y	0.0870		0.0000	1.0000
2	Uniform Force	Global Y	0.0870		0.0000	1.0000
3	Uniform Force	Global Y	0.0870		0.0000	1.0000
4	Uniform Force	Global Y	0.0870		0.0000	1.0000
5	Uniform Force	Global Y	0.0870		0.0000	1.0000
6	Uniform Force	Global Y	0.0870		0.0000	1.0000
7	Uniform Force	Global Y	0.0870		0.0000	1.0000
8	Uniform Force	Global Y	0.0870		0.0000	1.0000
9	Uniform Force	Global Y	0.0870		0.0000	1.0000
10	Uniform Force	Global Y	0.0870		0.0000	1.0000
11	Uniform Force	Global Y	0.0870		0.0000	1.0000
12	Uniform Force	Global Y	0.0870		0.0000	1.0000
13	Uniform Force	Global Y	0.0870		0.0000	1.0000

LOAD CASE WS 60 deg 70mph, Member Loads

Member	Type	Direction	Magnitude at Start (kips or kips-ft)	Magnitude at End (kips or kips-ft)	Start Position (x/L)	End Position from start (x/L)
14	Uniform Force	Global Y	0.0870		0.0000	1.0000
15	Uniform Force	Global Y	0.0870		0.0000	1.0000
16	Uniform Force	Global Y	0.0870		0.0000	1.0000
17	Uniform Force	Global Y	0.0870		0.0000	1.0000
18	Uniform Force	Global Y	0.0870		0.0000	1.0000
19	Uniform Force	Global Y	0.0870		0.0000	1.0000
20	Uniform Force	Global Y	0.0870		0.0000	1.0000
21	Uniform Force	Global Y	0.0870		0.0000	1.0000
22	Uniform Force	Global Y	0.0870		0.0000	1.0000
23	Uniform Force	Global Y	0.0870		0.0000	1.0000
24	Uniform Force	Global Y	0.0870		0.0000	1.0000
25	Uniform Force	Global Y	0.0870		0.0000	1.0000
26	Uniform Force	Global Y	0.0870		0.0000	1.0000
27	Uniform Force	Global Y	0.0870		0.0000	1.0000
28	Uniform Force	Global Y	0.0870		0.0000	1.0000
29	Uniform Force	Global Y	0.0870		0.0000	1.0000
30	Uniform Force	Global Y	0.0870		0.0000	1.0000
31	Uniform Force	Global Y	0.0870		0.0000	1.0000
32	Uniform Force	Global Y	0.0870		0.0000	1.0000
33	Uniform Force	Global Y	0.0870		0.0000	1.0000
34	Uniform Force	Global Y	0.0870		0.0000	1.0000
35	Uniform Force	Global Y	0.0870		0.0000	1.0000
36	Uniform Force	Global Y	0.0870		0.0000	1.0000
37	Uniform Force	Global Y	0.0870		0.0000	1.0000
38	Uniform Force	Global Y	0.0870		0.0000	1.0000
39	Uniform Force	Global Y	0.0870		0.0000	1.0000
40	Uniform Force	Global Y	0.0870		0.0000	1.0000
41	Uniform Force	Global Y	0.0870		0.0000	1.0000
42	Uniform Force	Global Y	0.0870		0.0000	1.0000
43	Uniform Force	Global Y	0.0870		0.0000	1.0000
44	Uniform Force	Global Y	0.0870		0.0000	1.0000
45	Uniform Force	Global Y	0.0870		0.0000	1.0000
46	Uniform Force	Global Y	0.0870		0.0000	1.0000
47	Uniform Force	Global Y	0.0870		0.0000	1.0000

LOAD CASE WS 60 deg 70mph, Member Loads

Member	Type	Direction	Magnitude at Start (kips or kips-ft)	Magnitude at End (kips or kips-ft)	Start Position (x/L)	End Position from start (x/L)
48	Uniform Force	Global Y	0.0870		0.0000	1.0000
49	Uniform Force	Global Y	0.0870		0.0000	1.0000
50	Uniform Force	Global Y	0.0870		0.0000	1.0000
51	Uniform Force	Global Y	0.0870		0.0000	1.0000
52	Uniform Force	Global Y	0.0870		0.0000	1.0000
53	Uniform Force	Global Y	0.0870		0.0000	1.0000
54	Uniform Force	Global Y	0.0870		0.0000	1.0000
55	Uniform Force	Global Y	0.0870		0.0000	1.0000
56	Uniform Force	Global Y	0.0870		0.0000	1.0000
57	Uniform Force	Global Y	0.0870		0.0000	1.0000
101	Uniform Force	Global Y	0.0090		0.0000	1.0000
102	Uniform Force	Global Y	0.0090		0.0000	1.0000
103	Uniform Force	Global Y	0.0090		0.0000	1.0000
104	Uniform Force	Global Y	0.0090		0.0000	1.0000
105	Uniform Force	Global Y	0.0090		0.0000	1.0000
106	Uniform Force	Global Y	0.0090		0.0000	1.0000
107	Uniform Force	Global Y	0.0090		0.0000	1.0000
108	Uniform Force	Global Y	0.0090		0.0000	1.0000
109	Uniform Force	Global Y	0.0090		0.0000	1.0000
110	Uniform Force	Global Y	0.0090		0.0000	1.0000
111	Uniform Force	Global Y	0.0090		0.0000	1.0000
112	Uniform Force	Global Y	0.0090		0.0000	1.0000
113	Uniform Force	Global Y	0.0090		0.0000	1.0000
114	Uniform Force	Global Y	0.0090		0.0000	1.0000
115	Uniform Force	Global Y	0.0090		0.0000	1.0000
116	Uniform Force	Global Y	0.0090		0.0000	1.0000
117	Uniform Force	Global Y	0.0090		0.0000	1.0000
118	Uniform Force	Global Y	0.0090		0.0000	1.0000
119	Uniform Force	Global Y	0.0090		0.0000	1.0000
120	Uniform Force	Global Y	0.0090		0.0000	1.0000
121	Uniform Force	Global Y	0.0090		0.0000	1.0000
122	Uniform Force	Global Y	0.0090		0.0000	1.0000
123	Uniform Force	Global Y	0.0090		0.0000	1.0000
124	Uniform Force	Global Y	0.0090		0.0000	1.0000

LOAD CASE WS 60 deg 70mph, Member Loads

Member	Type	Direction	Magnitude at Start (kips or kips-ft)	Magnitude at End (kips or kips-ft)	Start Position (x/L)	End Position from start (x/L)
125	Uniform Force	Global Y	0.0090		0.0000	1.0000
126	Uniform Force	Global Y	0.0090		0.0000	1.0000
127	Uniform Force	Global Y	0.0090		0.0000	1.0000
128	Uniform Force	Global Y	0.0090		0.0000	1.0000
129	Uniform Force	Global Y	0.0090		0.0000	1.0000
130	Uniform Force	Global Y	0.0090		0.0000	1.0000
131	Uniform Force	Global Y	0.0090		0.0000	1.0000
132	Uniform Force	Global Y	0.0090		0.0000	1.0000
133	Uniform Force	Global Y	0.0090		0.0000	1.0000
134	Uniform Force	Global Y	0.0090		0.0000	1.0000
135	Uniform Force	Global Y	0.0090		0.0000	1.0000
136	Uniform Force	Global Y	0.0090		0.0000	1.0000
137	Uniform Force	Global Y	0.0090		0.0000	1.0000
138	Uniform Force	Global Y	0.0090		0.0000	1.0000
139	Uniform Force	Global Y	0.0090		0.0000	1.0000
140	Uniform Force	Global Y	0.0090		0.0000	1.0000
141	Uniform Force	Global Y	0.0090		0.0000	1.0000
142	Uniform Force	Global Y	0.0090		0.0000	1.0000
143	Uniform Force	Global Y	0.0090		0.0000	1.0000
144	Uniform Force	Global Y	0.0090		0.0000	1.0000
145	Uniform Force	Global Y	0.0090		0.0000	1.0000
146	Uniform Force	Global Y	0.0090		0.0000	1.0000
147	Uniform Force	Global Y	0.0090		0.0000	1.0000
148	Uniform Force	Global Y	0.0090		0.0000	1.0000
149	Uniform Force	Global Y	0.0090		0.0000	1.0000
150	Uniform Force	Global Y	0.0090		0.0000	1.0000
151	Uniform Force	Global Y	0.0090		0.0000	1.0000
152	Uniform Force	Global Y	0.0090		0.0000	1.0000
153	Uniform Force	Global Y	0.0090		0.0000	1.0000
154	Uniform Force	Global Y	0.0090		0.0000	1.0000
155	Uniform Force	Global Y	0.0090		0.0000	1.0000
156	Uniform Force	Global Y	0.0090		0.0000	1.0000
157	Uniform Force	Global Y	0.0090		0.0000	1.0000
158	Uniform Force	Global Y	0.0090		0.0000	1.0000

LOAD CASE WS 60 deg 70mph, Member Loads

Member	Type	Direction	Magnitude at Start (kips or kips-ft)	Magnitude at End (kips or kips-ft)	Start Position (x/L)	End Position from start (x/L)
159	Uniform Force	Global Y	0.0090		0.0000	1.0000
160	Uniform Force	Global Y	0.0090		0.0000	1.0000
701	Uniform Force	Global Y	0.0090		0.0000	1.0000
702	Uniform Force	Global Y	0.0090		0.0000	1.0000
703	Uniform Force	Global Y	0.0090		0.0000	1.0000
704	Uniform Force	Global Y	0.0090		0.0000	1.0000
705	Uniform Force	Global Y	0.0090		0.0000	1.0000
706	Uniform Force	Global Y	0.0090		0.0000	1.0000
707	Uniform Force	Global Y	0.0090		0.0000	1.0000
708	Uniform Force	Global Y	0.0090		0.0000	1.0000
709	Uniform Force	Global Y	0.0090		0.0000	1.0000
710	Uniform Force	Global Y	0.0090		0.0000	1.0000
711	Uniform Force	Global Y	0.0090		0.0000	1.0000
712	Uniform Force	Global Y	0.0090		0.0000	1.0000
713	Uniform Force	Global Y	0.0090		0.0000	1.0000
714	Uniform Force	Global Y	0.0090		0.0000	1.0000
715	Uniform Force	Global Y	0.0090		0.0000	1.0000
716	Uniform Force	Global Y	0.0090		0.0000	1.0000
717	Uniform Force	Global Y	0.0090		0.0000	1.0000
718	Uniform Force	Global Y	0.0090		0.0000	1.0000
719	Uniform Force	Global Y	0.0090		0.0000	1.0000
720	Uniform Force	Global Y	0.0090		0.0000	1.0000
721	Uniform Force	Global Y	0.0090		0.0000	1.0000
722	Uniform Force	Global Y	0.0090		0.0000	1.0000
723	Uniform Force	Global Y	0.0090		0.0000	1.0000
724	Uniform Force	Global Y	0.0090		0.0000	1.0000
725	Uniform Force	Global Y	0.0090		0.0000	1.0000
726	Uniform Force	Global Y	0.0090		0.0000	1.0000
727	Uniform Force	Global Y	0.0090		0.0000	1.0000
728	Uniform Force	Global Y	0.0090		0.0000	1.0000
729	Uniform Force	Global Y	0.0090		0.0000	1.0000
730	Uniform Force	Global Y	0.0090		0.0000	1.0000
731	Uniform Force	Global Y	0.0090		0.0000	1.0000
732	Uniform Force	Global Y	0.0090		0.0000	1.0000

LOAD CASE WS 60 deg 70mph, Member Loads

Member	Type	Direction	Magnitude at Start (kips or kips-ft)	Magnitude at End (kips or kips-ft)	Start Position (x/L)	End Position from start (x/L)
733	Uniform Force	Global Y	0.0090		0.0000	1.0000
740	Uniform Force	Global Y	0.0090		0.0000	1.0000
741	Uniform Force	Global Y	0.0090		0.0000	1.0000
742	Uniform Force	Global Y	0.0090		0.0000	1.0000
743	Uniform Force	Global Y	0.0090		0.0000	1.0000
744	Uniform Force	Global Y	0.0090		0.0000	1.0000
745	Uniform Force	Global Y	0.0090		0.0000	1.0000
746	Uniform Force	Global Y	0.0090		0.0000	1.0000
747	Uniform Force	Global Y	0.0090		0.0000	1.0000
748	Uniform Force	Global Y	0.0090		0.0000	1.0000
749	Uniform Force	Global Y	0.0090		0.0000	1.0000
750	Uniform Force	Global Y	0.0090		0.0000	1.0000
751	Uniform Force	Global Y	0.0090		0.0000	1.0000
752	Uniform Force	Global Y	0.0090		0.0000	1.0000
753	Uniform Force	Global Y	0.0090		0.0000	1.0000
754	Uniform Force	Global Y	0.0090		0.0000	1.0000
755	Uniform Force	Global Y	0.0090		0.0000	1.0000
756	Uniform Force	Global Y	0.0090		0.0000	1.0000
757	Uniform Force	Global Y	0.0090		0.0000	1.0000
758	Uniform Force	Global Y	0.0090		0.0000	1.0000
759	Uniform Force	Global Y	0.0090		0.0000	1.0000
760	Uniform Force	Global Y	0.0090		0.0000	1.0000
761	Uniform Force	Global Y	0.0090		0.0000	1.0000
762	Uniform Force	Global Y	0.0090		0.0000	1.0000
763	Uniform Force	Global Y	0.0090		0.0000	1.0000
764	Uniform Force	Global Y	0.0090		0.0000	1.0000
765	Uniform Force	Global Y	0.0090		0.0000	1.0000
766	Uniform Force	Global Y	0.0090		0.0000	1.0000
767	Uniform Force	Global Y	0.0090		0.0000	1.0000
768	Uniform Force	Global Y	0.0090		0.0000	1.0000
769	Uniform Force	Global Y	0.0090		0.0000	1.0000
770	Uniform Force	Global Y	0.0090		0.0000	1.0000
771	Uniform Force	Global Y	0.0090		0.0000	1.0000
772	Uniform Force	Global Y	0.0090		0.0000	1.0000

LOAD CASE WS 60 deg 70mph, Member Loads

Member	Type	Direction	Magnitude at Start (kips or kips-ft)	Magnitude at End (kips or kips-ft)	Start Position (x/L)	End Position from start (x/L)
1	Uniform Moment	Local x	-0.3100		0.0000	1.0000
2	Uniform Moment	Local x	-0.3100		0.0000	1.0000
3	Uniform Moment	Local x	-0.3100		0.0000	1.0000
4	Uniform Moment	Local x	-0.3100		0.0000	1.0000
5	Uniform Moment	Local x	-0.3100		0.0000	1.0000
6	Uniform Moment	Local x	-0.3100		0.0000	1.0000
7	Uniform Moment	Local x	-0.3100		0.0000	1.0000
8	Uniform Moment	Local x	-0.3100		0.0000	1.0000
9	Uniform Moment	Local x	-0.3100		0.0000	1.0000
10	Uniform Moment	Local x	-0.3100		0.0000	1.0000
11	Uniform Moment	Local x	-0.3100		0.0000	1.0000
12	Uniform Moment	Local x	-0.3100		0.0000	1.0000
13	Uniform Moment	Local x	-0.3100		0.0000	1.0000
14	Uniform Moment	Local x	-0.3100		0.0000	1.0000
15	Uniform Moment	Local x	-0.3100		0.0000	1.0000
16	Uniform Moment	Local x	-0.3100		0.0000	1.0000
17	Uniform Moment	Local x	-0.3100		0.0000	1.0000
18	Uniform Moment	Local x	-0.3100		0.0000	1.0000
19	Uniform Moment	Local x	-0.3100		0.0000	1.0000
20	Uniform Moment	Local x	-0.3100		0.0000	1.0000
21	Uniform Moment	Local x	-0.3100		0.0000	1.0000
22	Uniform Moment	Local x	-0.3100		0.0000	1.0000
23	Uniform Moment	Local x	-0.3100		0.0000	1.0000
24	Uniform Moment	Local x	-0.3100		0.0000	1.0000
25	Uniform Moment	Local x	-0.3100		0.0000	1.0000
26	Uniform Moment	Local x	-0.3100		0.0000	1.0000
27	Uniform Moment	Local x	-0.3100		0.0000	1.0000
28	Uniform Moment	Local x	-0.3100		0.0000	1.0000
29	Uniform Moment	Local x	-0.3100		0.0000	1.0000
30	Uniform Moment	Local x	-0.3100		0.0000	1.0000
31	Uniform Moment	Local x	-0.3100		0.0000	1.0000
32	Uniform Moment	Local x	-0.3100		0.0000	1.0000
33	Uniform Moment	Local x	-0.3100		0.0000	1.0000
34	Uniform Moment	Local x	-0.3100		0.0000	1.0000

LOAD CASE WS 60 deg 70mph, Member Loads

Member	Type	Direction	Magnitude at Start (kips or kips-ft)	Magnitude at End (kips or kips-ft)	Start Position (x/L)	End Position from start (x/L)
35	Uniform Moment	Local x	-0.3100		0.0000	1.0000
36	Uniform Moment	Local x	-0.3100		0.0000	1.0000
37	Uniform Moment	Local x	-0.3100		0.0000	1.0000
38	Uniform Moment	Local x	-0.3100		0.0000	1.0000
39	Uniform Moment	Local x	-0.3100		0.0000	1.0000
40	Uniform Moment	Local x	-0.3100		0.0000	1.0000
41	Uniform Moment	Local x	-0.3100		0.0000	1.0000
42	Uniform Moment	Local x	-0.3100		0.0000	1.0000
43	Uniform Moment	Local x	-0.3100		0.0000	1.0000
44	Uniform Moment	Local x	-0.3100		0.0000	1.0000
45	Uniform Moment	Local x	-0.3100		0.0000	1.0000
46	Uniform Moment	Local x	-0.3100		0.0000	1.0000
47	Uniform Moment	Local x	-0.3100		0.0000	1.0000
48	Uniform Moment	Local x	-0.3100		0.0000	1.0000
49	Uniform Moment	Local x	-0.3100		0.0000	1.0000
50	Uniform Moment	Local x	-0.3100		0.0000	1.0000
51	Uniform Moment	Local x	-0.3100		0.0000	1.0000
52	Uniform Moment	Local x	-0.3100		0.0000	1.0000
53	Uniform Moment	Local x	-0.3100		0.0000	1.0000
54	Uniform Moment	Local x	-0.3100		0.0000	1.0000
55	Uniform Moment	Local x	-0.3100		0.0000	1.0000
56	Uniform Moment	Local x	-0.3100		0.0000	1.0000
57	Uniform Moment	Local x	-0.3100		0.0000	1.0000
1	Uniform Force	Local x	0.1800		0.0000	1.0000
2	Uniform Force	Local x	0.1800		0.0000	1.0000
3	Uniform Force	Local x	0.1800		0.0000	1.0000
4	Uniform Force	Local x	0.1800		0.0000	1.0000
5	Uniform Force	Local x	0.1800		0.0000	1.0000
6	Uniform Force	Local x	0.1800		0.0000	1.0000
7	Uniform Force	Local x	0.1800		0.0000	1.0000
8	Uniform Force	Local x	0.1800		0.0000	1.0000
9	Uniform Force	Local x	0.1800		0.0000	1.0000
10	Uniform Force	Local x	0.1800		0.0000	1.0000
11	Uniform Force	Local x	0.1800		0.0000	1.0000

LOAD CASE WS 60 deg 70mph, Member Loads

Member	Type	Direction	Magnitude at Start (kips or kips-ft)	Magnitude at End (kips or kips-ft)	Start Position (x/L)	End Position from start (x/L)
12	Uniform Force	Local x	0.1800		0.0000	1.0000
13	Uniform Force	Local x	0.1800		0.0000	1.0000
14	Uniform Force	Local x	0.1800		0.0000	1.0000
15	Uniform Force	Local x	0.1800		0.0000	1.0000
16	Uniform Force	Local x	0.1800		0.0000	1.0000
17	Uniform Force	Local x	0.1800		0.0000	1.0000
18	Uniform Force	Local x	0.1800		0.0000	1.0000
19	Uniform Force	Local x	0.1800		0.0000	1.0000
20	Uniform Force	Local x	0.1800		0.0000	1.0000
21	Uniform Force	Local x	0.1800		0.0000	1.0000
22	Uniform Force	Local x	0.1800		0.0000	1.0000
23	Uniform Force	Local x	0.1800		0.0000	1.0000
24	Uniform Force	Local x	0.1800		0.0000	1.0000
25	Uniform Force	Local x	0.1800		0.0000	1.0000
26	Uniform Force	Local x	0.1800		0.0000	1.0000
27	Uniform Force	Local x	0.1800		0.0000	1.0000
28	Uniform Force	Local x	0.1800		0.0000	1.0000
29	Uniform Force	Local x	0.1800		0.0000	1.0000
30	Uniform Force	Local x	0.1800		0.0000	1.0000
31	Uniform Force	Local x	0.1800		0.0000	1.0000
32	Uniform Force	Local x	0.1800		0.0000	1.0000
33	Uniform Force	Local x	0.1800		0.0000	1.0000
34	Uniform Force	Local x	0.1800		0.0000	1.0000
35	Uniform Force	Local x	0.1800		0.0000	1.0000
36	Uniform Force	Local x	0.1800		0.0000	1.0000
37	Uniform Force	Local x	0.1800		0.0000	1.0000
38	Uniform Force	Local x	0.1800		0.0000	1.0000
39	Uniform Force	Local x	0.1800		0.0000	1.0000
40	Uniform Force	Local x	0.1800		0.0000	1.0000
41	Uniform Force	Local x	0.1800		0.0000	1.0000
42	Uniform Force	Local x	0.1800		0.0000	1.0000
43	Uniform Force	Local x	0.1800		0.0000	1.0000
44	Uniform Force	Local x	0.1800		0.0000	1.0000
45	Uniform Force	Local x	0.1800		0.0000	1.0000

LOAD CASE WS 60 deg 70mph, Member Loads

Member	Type	Direction	Magnitude at Start (kips or kips-ft)	Magnitude at End (kips or kips-ft)	Start Position (x/L)	End Position from start (x/L)
46	Uniform Force	Local x	0.1800		0.0000	1.0000
47	Uniform Force	Local x	0.1800		0.0000	1.0000
48	Uniform Force	Local x	0.1800		0.0000	1.0000
49	Uniform Force	Local x	0.1800		0.0000	1.0000
50	Uniform Force	Local x	0.1800		0.0000	1.0000
51	Uniform Force	Local x	0.1800		0.0000	1.0000
52	Uniform Force	Local x	0.1800		0.0000	1.0000
53	Uniform Force	Local x	0.1800		0.0000	1.0000
54	Uniform Force	Local x	0.1800		0.0000	1.0000
55	Uniform Force	Local x	0.1800		0.0000	1.0000
56	Uniform Force	Local x	0.1800		0.0000	1.0000
57	Uniform Force	Local x	0.1800		0.0000	1.0000
101	Uniform Force	Local x	0.0190		0.0000	1.0000
102	Uniform Force	Local x	0.0190		0.0000	1.0000
103	Uniform Force	Local x	0.0190		0.0000	1.0000
104	Uniform Force	Local x	0.0190		0.0000	1.0000
105	Uniform Force	Local x	0.0190		0.0000	1.0000
106	Uniform Force	Local x	0.0190		0.0000	1.0000
107	Uniform Force	Local x	0.0190		0.0000	1.0000
108	Uniform Force	Local x	0.0190		0.0000	1.0000
109	Uniform Force	Local x	0.0190		0.0000	1.0000
110	Uniform Force	Local x	0.0190		0.0000	1.0000
111	Uniform Force	Local x	0.0190		0.0000	1.0000
112	Uniform Force	Local x	0.0190		0.0000	1.0000
113	Uniform Force	Local x	0.0190		0.0000	1.0000
114	Uniform Force	Local x	0.0190		0.0000	1.0000
115	Uniform Force	Local x	0.0190		0.0000	1.0000
116	Uniform Force	Local x	0.0190		0.0000	1.0000
117	Uniform Force	Local x	0.0190		0.0000	1.0000
118	Uniform Force	Local x	0.0190		0.0000	1.0000
119	Uniform Force	Local x	0.0190		0.0000	1.0000
120	Uniform Force	Local x	0.0190		0.0000	1.0000
121	Uniform Force	Local x	0.0190		0.0000	1.0000
122	Uniform Force	Local x	0.0190		0.0000	1.0000

LOAD CASE WS 60 deg 70mph, Member Loads

Member	Type	Direction	Magnitude at Start (kips or kips-ft)	Magnitude at End (kips or kips-ft)	Start Position (x/L)	End Position from start (x/L)
123	Uniform Force	Local x	0.0190		0.0000	1.0000
124	Uniform Force	Local x	0.0190		0.0000	1.0000
125	Uniform Force	Local x	0.0190		0.0000	1.0000
126	Uniform Force	Local x	0.0190		0.0000	1.0000
127	Uniform Force	Local x	0.0190		0.0000	1.0000
128	Uniform Force	Local x	0.0190		0.0000	1.0000
129	Uniform Force	Local x	0.0190		0.0000	1.0000
130	Uniform Force	Local x	0.0190		0.0000	1.0000
131	Uniform Force	Local x	0.0190		0.0000	1.0000
132	Uniform Force	Local x	0.0190		0.0000	1.0000
133	Uniform Force	Local x	0.0190		0.0000	1.0000
134	Uniform Force	Local x	0.0190		0.0000	1.0000
135	Uniform Force	Local x	0.0190		0.0000	1.0000
136	Uniform Force	Local x	0.0190		0.0000	1.0000
137	Uniform Force	Local x	0.0190		0.0000	1.0000
138	Uniform Force	Local x	0.0190		0.0000	1.0000
139	Uniform Force	Local x	0.0190		0.0000	1.0000
140	Uniform Force	Local x	0.0190		0.0000	1.0000
141	Uniform Force	Local x	0.0190		0.0000	1.0000
142	Uniform Force	Local x	0.0190		0.0000	1.0000
143	Uniform Force	Local x	0.0190		0.0000	1.0000
144	Uniform Force	Local x	0.0190		0.0000	1.0000
145	Uniform Force	Local x	0.0190		0.0000	1.0000
146	Uniform Force	Local x	0.0190		0.0000	1.0000
147	Uniform Force	Local x	0.0190		0.0000	1.0000
148	Uniform Force	Local x	0.0190		0.0000	1.0000
149	Uniform Force	Local x	0.0190		0.0000	1.0000
150	Uniform Force	Local x	0.0190		0.0000	1.0000
151	Uniform Force	Local x	0.0190		0.0000	1.0000
152	Uniform Force	Local x	0.0190		0.0000	1.0000
153	Uniform Force	Local x	0.0190		0.0000	1.0000
154	Uniform Force	Local x	0.0190		0.0000	1.0000
155	Uniform Force	Local x	0.0190		0.0000	1.0000
156	Uniform Force	Local x	0.0190		0.0000	1.0000

LOAD CASE WS 60 deg 70mph, Member Loads

Member	Type	Direction	Magnitude at Start (kips or kips-ft)	Magnitude at End (kips or kips-ft)	Start Position (x/L)	End Position from start (x/L)
157	Uniform Force	Local x	0.0190		0.0000	1.0000
158	Uniform Force	Local x	0.0190		0.0000	1.0000
159	Uniform Force	Local x	0.0190		0.0000	1.0000
160	Uniform Force	Local x	0.0190		0.0000	1.0000
701	Uniform Force	Global X	0.0180		0.0000	1.0000
702	Uniform Force	Global X	0.0180		0.0000	1.0000
703	Uniform Force	Global X	0.0180		0.0000	1.0000
704	Uniform Force	Global X	0.0180		0.0000	1.0000
705	Uniform Force	Global X	0.0180		0.0000	1.0000
706	Uniform Force	Global X	0.0180		0.0000	1.0000
707	Uniform Force	Global X	0.0180		0.0000	1.0000
708	Uniform Force	Global X	0.0180		0.0000	1.0000
709	Uniform Force	Global X	0.0180		0.0000	1.0000
710	Uniform Force	Global X	0.0180		0.0000	1.0000
711	Uniform Force	Global X	0.0180		0.0000	1.0000
712	Uniform Force	Global X	0.0180		0.0000	1.0000
713	Uniform Force	Global X	0.0180		0.0000	1.0000
714	Uniform Force	Global X	0.0180		0.0000	1.0000
715	Uniform Force	Global X	0.0180		0.0000	1.0000
716	Uniform Force	Global X	0.0180		0.0000	1.0000
717	Uniform Force	Global X	0.0180		0.0000	1.0000
718	Uniform Force	Global X	0.0180		0.0000	1.0000
719	Uniform Force	Global X	0.0180		0.0000	1.0000
720	Uniform Force	Global X	0.0180		0.0000	1.0000
721	Uniform Force	Global X	0.0180		0.0000	1.0000
722	Uniform Force	Global X	0.0180		0.0000	1.0000
723	Uniform Force	Global X	0.0180		0.0000	1.0000
724	Uniform Force	Global X	0.0180		0.0000	1.0000
725	Uniform Force	Global X	0.0180		0.0000	1.0000
726	Uniform Force	Global X	0.0180		0.0000	1.0000
727	Uniform Force	Global X	0.0180		0.0000	1.0000
728	Uniform Force	Global X	0.0180		0.0000	1.0000
729	Uniform Force	Global X	0.0180		0.0000	1.0000
730	Uniform Force	Global X	0.0180		0.0000	1.0000

LOAD CASE WS 60 deg 70mph, Member Loads

Member	Type	Direction	Magnitude at Start (kips or kips-ft)	Magnitude at End (kips or kips-ft)	Start Position (x/L)	End Position from start (x/L)
731	Uniform Force	Global X	0.0180		0.0000	1.0000
732	Uniform Force	Global X	0.0180		0.0000	1.0000
733	Uniform Force	Global X	0.0180		0.0000	1.0000
740	Uniform Force	Global X	0.0180		0.0000	1.0000
741	Uniform Force	Global X	0.0180		0.0000	1.0000
742	Uniform Force	Global X	0.0180		0.0000	1.0000
743	Uniform Force	Global X	0.0180		0.0000	1.0000
744	Uniform Force	Global X	0.0180		0.0000	1.0000
745	Uniform Force	Global X	0.0180		0.0000	1.0000
746	Uniform Force	Global X	0.0180		0.0000	1.0000
747	Uniform Force	Global X	0.0180		0.0000	1.0000
748	Uniform Force	Global X	0.0180		0.0000	1.0000
749	Uniform Force	Global X	0.0180		0.0000	1.0000
750	Uniform Force	Global X	0.0180		0.0000	1.0000
751	Uniform Force	Global X	0.0180		0.0000	1.0000
752	Uniform Force	Global X	0.0180		0.0000	1.0000
753	Uniform Force	Global X	0.0180		0.0000	1.0000
754	Uniform Force	Global X	0.0180		0.0000	1.0000
755	Uniform Force	Global X	0.0180		0.0000	1.0000
756	Uniform Force	Global X	0.0180		0.0000	1.0000
757	Uniform Force	Global X	0.0180		0.0000	1.0000
758	Uniform Force	Global X	0.0180		0.0000	1.0000
759	Uniform Force	Global X	0.0180		0.0000	1.0000
760	Uniform Force	Global X	0.0180		0.0000	1.0000
761	Uniform Force	Global X	0.0180		0.0000	1.0000
762	Uniform Force	Global X	0.0180		0.0000	1.0000
763	Uniform Force	Global X	0.0180		0.0000	1.0000
764	Uniform Force	Global X	0.0180		0.0000	1.0000
765	Uniform Force	Global X	0.0180		0.0000	1.0000
766	Uniform Force	Global X	0.0180		0.0000	1.0000
767	Uniform Force	Global X	0.0180		0.0000	1.0000
768	Uniform Force	Global X	0.0180		0.0000	1.0000
769	Uniform Force	Global X	0.0180		0.0000	1.0000
770	Uniform Force	Global X	0.0180		0.0000	1.0000

LOAD CASE WS 60 deg 70mph, Member Loads

Member	Type	Direction	Magnitude at Start (kips or kips-ft)	Magnitude at End (kips or kips-ft)	Start Position (x/L)	End Position from start (x/L)
771	Uniform Force	Global X	0.0180		0.0000	1.0000
772	Uniform Force	Global X	0.0180		0.0000	1.0000
2002	Uniform Force	Global Y	0.0435		0.0000	1.0000
2003	Uniform Force	Global Y	0.0435		0.0000	1.0000
2002	Trapezoidal Force	Global X	0.2300	0.1800	0.0000	1.0000
2003	Trapezoidal Force	Global X	0.1800	0.1300	0.0000	1.0000
1017	Uniform Force	Global Y	0.0360		0.0000	1.0000
1018	Uniform Force	Global Y	0.0360		0.0000	1.0000
1019	Uniform Force	Global Y	0.0360		0.0000	1.0000
1017	Uniform Force	Global X	0.0260		0.0000	1.0000
1018	Uniform Force	Global X	0.0260		0.0000	1.0000
1019	Uniform Force	Global X	0.0260		0.0000	1.0000
1013	Uniform Force	Global Y	0.0360		0.0000	1.0000
1014	Uniform Force	Global Y	0.0360		0.0000	1.0000
1015	Uniform Force	Global Y	0.0360		0.0000	1.0000
1013	Uniform Force	Global X	0.0260		0.0000	1.0000
1014	Uniform Force	Global X	0.0260		0.0000	1.0000
1015	Uniform Force	Global X	0.0260		0.0000	1.0000
3017	Uniform Force	Global Y	0.0360		0.0000	1.0000
3018	Uniform Force	Global Y	0.0360		0.0000	1.0000
3019	Uniform Force	Global Y	0.0360		0.0000	1.0000
3017	Uniform Force	Global X	0.0260		0.0000	1.0000
3018	Uniform Force	Global X	0.0260		0.0000	1.0000
3019	Uniform Force	Global X	0.0260		0.0000	1.0000
3013	Uniform Force	Global Y	0.0360		0.0000	1.0000
3014	Uniform Force	Global Y	0.0360		0.0000	1.0000
3015	Uniform Force	Global Y	0.0360		0.0000	1.0000
3013	Uniform Force	Global X	0.0260		0.0000	1.0000
3014	Uniform Force	Global X	0.0260		0.0000	1.0000
3015	Uniform Force	Global X	0.0260		0.0000	1.0000
1006	Uniform Force	Global X	0.0650		0.0000	1.0000
1007	Uniform Force	Global X	0.0650		0.0000	1.0000
1008	Uniform Force	Global X	0.0650		0.0000	1.0000
1009	Uniform Force	Global X	0.0650		0.0000	1.0000

LOAD CASE WS 60 deg 70mph, Member Loads

Member	Type	Direction	Magnitude at Start (kips or kips-ft)	Magnitude at End (kips or kips-ft)	Start Position (x/L)	End Position from start (x/L)
1010	Uniform Force	Global X	0.0650		0.0000	1.0000
1011	Uniform Force	Global X	0.0650		0.0000	1.0000
1012	Uniform Force	Global X	0.0650		0.0000	1.0000
3006	Uniform Force	Global X	0.0650		0.0000	1.0000
3007	Uniform Force	Global X	0.0650		0.0000	1.0000
3008	Uniform Force	Global X	0.0650		0.0000	1.0000
3009	Uniform Force	Global X	0.0650		0.0000	1.0000
3010	Uniform Force	Global X	0.0650		0.0000	1.0000
3011	Uniform Force	Global X	0.0650		0.0000	1.0000
3012	Uniform Force	Global X	0.0650		0.0000	1.0000
501	Uniform Force	Global Y	0.0110		0.0000	1.0000
502	Uniform Force	Global Y	0.0110		0.0000	1.0000
503	Uniform Force	Global Y	0.0110		0.0000	1.0000
504	Uniform Force	Global Y	0.0110		0.0000	1.0000
505	Uniform Force	Global Y	0.0110		0.0000	1.0000
601	Uniform Force	Global Y	0.0110		0.0000	1.0000
602	Uniform Force	Global Y	0.0110		0.0000	1.0000
603	Uniform Force	Global Y	0.0110		0.0000	1.0000
604	Uniform Force	Global Y	0.0110		0.0000	1.0000
605	Uniform Force	Global Y	0.0110		0.0000	1.0000
401	Uniform Force	Global Y	0.0435		0.0000	1.0000
402	Uniform Force	Global Y	0.0435		0.0000	1.0000
403	Uniform Force	Global Y	0.0435		0.0000	1.0000
405	Trapezoidal Force	Global Y	0.0500	0.0500	0.0000	1.0000
406	Trapezoidal Force	Global Y	0.0500	0.0500	0.0000	1.0000
407	Trapezoidal Force	Global Y	0.0500	0.0500	0.0000	1.0000
408	Trapezoidal Force	Global Y	0.0500	0.0400	0.0000	1.0000
409	Trapezoidal Force	Global Y	0.0400	0.0400	0.0000	1.0000
410	Trapezoidal Force	Global Y	0.0400	0.0400	0.0000	1.0000
411	Trapezoidal Force	Global Y	0.0400	0.0400	0.0000	1.0000
412	Trapezoidal Force	Global Y	0.0400	0.0400	0.0000	1.0000
413	Trapezoidal Force	Global Y	0.0400	0.0300	0.0000	1.0000
501	Uniform Force	Global X	0.0180		0.0000	1.0000
502	Uniform Force	Global X	0.0180		0.0000	1.0000

LOAD CASE WS_60 deg_70mph, Member Loads

Member	Type	Direction	Magnitude at Start (kips or kips-ft)	Magnitude at End (kips or kips-ft)	Start Position (x/L)	End Position from start (x/L)
503	Uniform Force	Global X	0.0180		0.0000	1.0000
504	Uniform Force	Global X	0.0180		0.0000	1.0000
505	Uniform Force	Global X	0.0180		0.0000	1.0000
601	Uniform Force	Global X	0.0180		0.0000	1.0000
602	Uniform Force	Global X	0.0180		0.0000	1.0000
603	Uniform Force	Global X	0.0180		0.0000	1.0000
604	Uniform Force	Global X	0.0180		0.0000	1.0000
605	Uniform Force	Global X	0.0180		0.0000	1.0000
401	Uniform Force	Global X	0.0650		0.0000	1.0000
402	Uniform Force	Global X	0.0650		0.0000	1.0000
403	Uniform Force	Global X	0.0650		0.0000	1.0000
405	Trapezoidal Force	Global X	0.1000	0.0900	0.0000	1.0000
406	Trapezoidal Force	Global X	0.0900	0.0900	0.0000	1.0000
407	Trapezoidal Force	Global X	0.0900	0.0800	0.0000	1.0000
408	Trapezoidal Force	Global X	0.0800	0.0800	0.0000	1.0000
409	Trapezoidal Force	Global X	0.0800	0.0700	0.0000	1.0000
410	Trapezoidal Force	Global X	0.0700	0.0700	0.0000	1.0000
411	Trapezoidal Force	Global X	0.0700	0.0700	0.0000	1.0000
412	Trapezoidal Force	Global X	0.0700	0.0600	0.0000	1.0000
413	Trapezoidal Force	Global X	0.0600	0.0600	0.0000	1.0000

LOAD CASE WS_45 deg_70mph, Member Loads

Member	Type	Direction	Magnitude at Start (kips or kips-ft)	Magnitude at End (kips or kips-ft)	Start Position (x/L)	End Position from start (x/L)
1	Uniform Force	Global Y	0.1710		0.0000	1.0000
2	Uniform Force	Global Y	0.1710		0.0000	1.0000
3	Uniform Force	Global Y	0.1710		0.0000	1.0000
4	Uniform Force	Global Y	0.1710		0.0000	1.0000
5	Uniform Force	Global Y	0.1710		0.0000	1.0000
6	Uniform Force	Global Y	0.1710		0.0000	1.0000
7	Uniform Force	Global Y	0.1710		0.0000	1.0000
8	Uniform Force	Global Y	0.1710		0.0000	1.0000
9	Uniform Force	Global Y	0.1710		0.0000	1.0000

LOAD CASE WS 45 deg 70mph, Member Loads

Member	Type	Direction	Magnitude at Start (kips or kips-ft)	Magnitude at End (kips or kips-ft)	Start Position (x/L)	End Position from start (x/L)
10	Uniform Force	Global Y	0.1710		0.0000	1.0000
11	Uniform Force	Global Y	0.1710		0.0000	1.0000
12	Uniform Force	Global Y	0.1710		0.0000	1.0000
13	Uniform Force	Global Y	0.1710		0.0000	1.0000
14	Uniform Force	Global Y	0.1710		0.0000	1.0000
15	Uniform Force	Global Y	0.1710		0.0000	1.0000
16	Uniform Force	Global Y	0.1710		0.0000	1.0000
17	Uniform Force	Global Y	0.1710		0.0000	1.0000
18	Uniform Force	Global Y	0.1710		0.0000	1.0000
19	Uniform Force	Global Y	0.1710		0.0000	1.0000
20	Uniform Force	Global Y	0.1710		0.0000	1.0000
21	Uniform Force	Global Y	0.1710		0.0000	1.0000
22	Uniform Force	Global Y	0.1710		0.0000	1.0000
23	Uniform Force	Global Y	0.1710		0.0000	1.0000
24	Uniform Force	Global Y	0.1710		0.0000	1.0000
25	Uniform Force	Global Y	0.1710		0.0000	1.0000
26	Uniform Force	Global Y	0.1710		0.0000	1.0000
27	Uniform Force	Global Y	0.1710		0.0000	1.0000
28	Uniform Force	Global Y	0.1710		0.0000	1.0000
29	Uniform Force	Global Y	0.1710		0.0000	1.0000
30	Uniform Force	Global Y	0.1710		0.0000	1.0000
31	Uniform Force	Global Y	0.1710		0.0000	1.0000
32	Uniform Force	Global Y	0.1710		0.0000	1.0000
33	Uniform Force	Global Y	0.1710		0.0000	1.0000
34	Uniform Force	Global Y	0.1710		0.0000	1.0000
35	Uniform Force	Global Y	0.1710		0.0000	1.0000
36	Uniform Force	Global Y	0.1710		0.0000	1.0000
37	Uniform Force	Global Y	0.1710		0.0000	1.0000
38	Uniform Force	Global Y	0.1710		0.0000	1.0000
39	Uniform Force	Global Y	0.1710		0.0000	1.0000
40	Uniform Force	Global Y	0.1710		0.0000	1.0000
41	Uniform Force	Global Y	0.1710		0.0000	1.0000
42	Uniform Force	Global Y	0.1710		0.0000	1.0000
43	Uniform Force	Global Y	0.1710		0.0000	1.0000

LOAD CASE WS 45 deg 70mph, Member Loads

Member	Type	Direction	Magnitude at Start (kips or kips-ft)	Magnitude at End (kips or kips-ft)	Start Position (x/L)	End Position from start (x/L)
44	Uniform Force	Global Y	0.1710		0.0000	1.0000
45	Uniform Force	Global Y	0.1710		0.0000	1.0000
46	Uniform Force	Global Y	0.1710		0.0000	1.0000
47	Uniform Force	Global Y	0.1710		0.0000	1.0000
48	Uniform Force	Global Y	0.1710		0.0000	1.0000
49	Uniform Force	Global Y	0.1710		0.0000	1.0000
50	Uniform Force	Global Y	0.1710		0.0000	1.0000
51	Uniform Force	Global Y	0.1710		0.0000	1.0000
52	Uniform Force	Global Y	0.1710		0.0000	1.0000
53	Uniform Force	Global Y	0.1710		0.0000	1.0000
54	Uniform Force	Global Y	0.1710		0.0000	1.0000
55	Uniform Force	Global Y	0.1710		0.0000	1.0000
56	Uniform Force	Global Y	0.1710		0.0000	1.0000
57	Uniform Force	Global Y	0.1710		0.0000	1.0000
101	Uniform Force	Global Y	0.0180		0.0000	1.0000
102	Uniform Force	Global Y	0.0180		0.0000	1.0000
103	Uniform Force	Global Y	0.0180		0.0000	1.0000
104	Uniform Force	Global Y	0.0180		0.0000	1.0000
105	Uniform Force	Global Y	0.0180		0.0000	1.0000
106	Uniform Force	Global Y	0.0180		0.0000	1.0000
107	Uniform Force	Global Y	0.0180		0.0000	1.0000
108	Uniform Force	Global Y	0.0180		0.0000	1.0000
109	Uniform Force	Global Y	0.0180		0.0000	1.0000
110	Uniform Force	Global Y	0.0180		0.0000	1.0000
111	Uniform Force	Global Y	0.0180		0.0000	1.0000
112	Uniform Force	Global Y	0.0180		0.0000	1.0000
113	Uniform Force	Global Y	0.0180		0.0000	1.0000
114	Uniform Force	Global Y	0.0180		0.0000	1.0000
115	Uniform Force	Global Y	0.0180		0.0000	1.0000
116	Uniform Force	Global Y	0.0180		0.0000	1.0000
117	Uniform Force	Global Y	0.0180		0.0000	1.0000
118	Uniform Force	Global Y	0.0180		0.0000	1.0000
119	Uniform Force	Global Y	0.0180		0.0000	1.0000
120	Uniform Force	Global Y	0.0180		0.0000	1.0000

LOAD CASE WS 45 deg 70mph, Member Loads

Member	Type	Direction	Magnitude at Start (kips or kips-ft)	Magnitude at End (kips or kips-ft)	Start Position (x/L)	End Position from start (x/L)
121	Uniform Force	Global Y	0.0180		0.0000	1.0000
122	Uniform Force	Global Y	0.0180		0.0000	1.0000
123	Uniform Force	Global Y	0.0180		0.0000	1.0000
124	Uniform Force	Global Y	0.0180		0.0000	1.0000
125	Uniform Force	Global Y	0.0180		0.0000	1.0000
126	Uniform Force	Global Y	0.0180		0.0000	1.0000
127	Uniform Force	Global Y	0.0180		0.0000	1.0000
128	Uniform Force	Global Y	0.0180		0.0000	1.0000
129	Uniform Force	Global Y	0.0180		0.0000	1.0000
130	Uniform Force	Global Y	0.0180		0.0000	1.0000
131	Uniform Force	Global Y	0.0180		0.0000	1.0000
132	Uniform Force	Global Y	0.0180		0.0000	1.0000
133	Uniform Force	Global Y	0.0180		0.0000	1.0000
134	Uniform Force	Global Y	0.0180		0.0000	1.0000
135	Uniform Force	Global Y	0.0180		0.0000	1.0000
136	Uniform Force	Global Y	0.0180		0.0000	1.0000
137	Uniform Force	Global Y	0.0180		0.0000	1.0000
138	Uniform Force	Global Y	0.0180		0.0000	1.0000
139	Uniform Force	Global Y	0.0180		0.0000	1.0000
140	Uniform Force	Global Y	0.0180		0.0000	1.0000
141	Uniform Force	Global Y	0.0180		0.0000	1.0000
142	Uniform Force	Global Y	0.0180		0.0000	1.0000
143	Uniform Force	Global Y	0.0180		0.0000	1.0000
144	Uniform Force	Global Y	0.0180		0.0000	1.0000
145	Uniform Force	Global Y	0.0180		0.0000	1.0000
146	Uniform Force	Global Y	0.0180		0.0000	1.0000
147	Uniform Force	Global Y	0.0180		0.0000	1.0000
148	Uniform Force	Global Y	0.0180		0.0000	1.0000
149	Uniform Force	Global Y	0.0180		0.0000	1.0000
150	Uniform Force	Global Y	0.0180		0.0000	1.0000
151	Uniform Force	Global Y	0.0180		0.0000	1.0000
152	Uniform Force	Global Y	0.0180		0.0000	1.0000
153	Uniform Force	Global Y	0.0180		0.0000	1.0000
154	Uniform Force	Global Y	0.0180		0.0000	1.0000

LOAD CASE WS 45 deg 70mph, Member Loads

Member	Type	Direction	Magnitude at Start (kips or kips-ft)	Magnitude at End (kips or kips-ft)	Start Position (x/L)	End Position from start (x/L)
155	Uniform Force	Global Y	0.0180		0.0000	1.0000
156	Uniform Force	Global Y	0.0180		0.0000	1.0000
157	Uniform Force	Global Y	0.0180		0.0000	1.0000
158	Uniform Force	Global Y	0.0180		0.0000	1.0000
159	Uniform Force	Global Y	0.0180		0.0000	1.0000
160	Uniform Force	Global Y	0.0180		0.0000	1.0000
701	Uniform Force	Global Y	0.0170		0.0000	1.0000
702	Uniform Force	Global Y	0.0170		0.0000	1.0000
703	Uniform Force	Global Y	0.0170		0.0000	1.0000
704	Uniform Force	Global Y	0.0170		0.0000	1.0000
705	Uniform Force	Global Y	0.0170		0.0000	1.0000
706	Uniform Force	Global Y	0.0170		0.0000	1.0000
707	Uniform Force	Global Y	0.0170		0.0000	1.0000
708	Uniform Force	Global Y	0.0170		0.0000	1.0000
709	Uniform Force	Global Y	0.0170		0.0000	1.0000
710	Uniform Force	Global Y	0.0170		0.0000	1.0000
711	Uniform Force	Global Y	0.0170		0.0000	1.0000
712	Uniform Force	Global Y	0.0170		0.0000	1.0000
713	Uniform Force	Global Y	0.0170		0.0000	1.0000
714	Uniform Force	Global Y	0.0170		0.0000	1.0000
715	Uniform Force	Global Y	0.0170		0.0000	1.0000
716	Uniform Force	Global Y	0.0170		0.0000	1.0000
717	Uniform Force	Global Y	0.0170		0.0000	1.0000
718	Uniform Force	Global Y	0.0170		0.0000	1.0000
719	Uniform Force	Global Y	0.0170		0.0000	1.0000
720	Uniform Force	Global Y	0.0170		0.0000	1.0000
721	Uniform Force	Global Y	0.0170		0.0000	1.0000
722	Uniform Force	Global Y	0.0170		0.0000	1.0000
723	Uniform Force	Global Y	0.0170		0.0000	1.0000
724	Uniform Force	Global Y	0.0170		0.0000	1.0000
725	Uniform Force	Global Y	0.0170		0.0000	1.0000
726	Uniform Force	Global Y	0.0170		0.0000	1.0000
727	Uniform Force	Global Y	0.0170		0.0000	1.0000
728	Uniform Force	Global Y	0.0170		0.0000	1.0000

LOAD CASE WS 45 deg 70mph, Member Loads

Member	Type	Direction	Magnitude at Start (kips or kips-ft)	Magnitude at End (kips or kips-ft)	Start Position (x/L)	End Position from start (x/L)
729	Uniform Force	Global Y	0.0170		0.0000	1.0000
730	Uniform Force	Global Y	0.0170		0.0000	1.0000
731	Uniform Force	Global Y	0.0170		0.0000	1.0000
732	Uniform Force	Global Y	0.0170		0.0000	1.0000
733	Uniform Force	Global Y	0.0170		0.0000	1.0000
740	Uniform Force	Global Y	0.0170		0.0000	1.0000
741	Uniform Force	Global Y	0.0170		0.0000	1.0000
742	Uniform Force	Global Y	0.0170		0.0000	1.0000
743	Uniform Force	Global Y	0.0170		0.0000	1.0000
744	Uniform Force	Global Y	0.0170		0.0000	1.0000
745	Uniform Force	Global Y	0.0170		0.0000	1.0000
746	Uniform Force	Global Y	0.0170		0.0000	1.0000
747	Uniform Force	Global Y	0.0170		0.0000	1.0000
748	Uniform Force	Global Y	0.0170		0.0000	1.0000
749	Uniform Force	Global Y	0.0170		0.0000	1.0000
750	Uniform Force	Global Y	0.0170		0.0000	1.0000
751	Uniform Force	Global Y	0.0170		0.0000	1.0000
752	Uniform Force	Global Y	0.0170		0.0000	1.0000
753	Uniform Force	Global Y	0.0170		0.0000	1.0000
754	Uniform Force	Global Y	0.0170		0.0000	1.0000
755	Uniform Force	Global Y	0.0170		0.0000	1.0000
756	Uniform Force	Global Y	0.0170		0.0000	1.0000
757	Uniform Force	Global Y	0.0170		0.0000	1.0000
758	Uniform Force	Global Y	0.0170		0.0000	1.0000
759	Uniform Force	Global Y	0.0170		0.0000	1.0000
760	Uniform Force	Global Y	0.0170		0.0000	1.0000
761	Uniform Force	Global Y	0.0170		0.0000	1.0000
762	Uniform Force	Global Y	0.0170		0.0000	1.0000
763	Uniform Force	Global Y	0.0170		0.0000	1.0000
764	Uniform Force	Global Y	0.0170		0.0000	1.0000
765	Uniform Force	Global Y	0.0170		0.0000	1.0000
766	Uniform Force	Global Y	0.0170		0.0000	1.0000
767	Uniform Force	Global Y	0.0170		0.0000	1.0000
768	Uniform Force	Global Y	0.0170		0.0000	1.0000

LOAD CASE WS 45 deg 70mph, Member Loads

Member	Type	Direction	Magnitude at Start (kips or kips-ft)	Magnitude at End (kips or kips-ft)	Start Position (x/L)	End Position from start (x/L)
769	Uniform Force	Global Y	0.0170		0.0000	1.0000
770	Uniform Force	Global Y	0.0170		0.0000	1.0000
771	Uniform Force	Global Y	0.0170		0.0000	1.0000
772	Uniform Force	Global Y	0.0170		0.0000	1.0000
1	Uniform Moment	Local x	-0.6000		0.0000	1.0000
2	Uniform Moment	Local x	-0.6000		0.0000	1.0000
3	Uniform Moment	Local x	-0.6000		0.0000	1.0000
4	Uniform Moment	Local x	-0.6000		0.0000	1.0000
5	Uniform Moment	Local x	-0.6000		0.0000	1.0000
6	Uniform Moment	Local x	-0.6000		0.0000	1.0000
7	Uniform Moment	Local x	-0.6000		0.0000	1.0000
8	Uniform Moment	Local x	-0.6000		0.0000	1.0000
9	Uniform Moment	Local x	-0.6000		0.0000	1.0000
10	Uniform Moment	Local x	-0.6000		0.0000	1.0000
11	Uniform Moment	Local x	-0.6000		0.0000	1.0000
12	Uniform Moment	Local x	-0.6000		0.0000	1.0000
13	Uniform Moment	Local x	-0.6000		0.0000	1.0000
14	Uniform Moment	Local x	-0.6000		0.0000	1.0000
15	Uniform Moment	Local x	-0.6000		0.0000	1.0000
16	Uniform Moment	Local x	-0.6000		0.0000	1.0000
17	Uniform Moment	Local x	-0.6000		0.0000	1.0000
18	Uniform Moment	Local x	-0.6000		0.0000	1.0000
19	Uniform Moment	Local x	-0.6000		0.0000	1.0000
20	Uniform Moment	Local x	-0.6000		0.0000	1.0000
21	Uniform Moment	Local x	-0.6000		0.0000	1.0000
22	Uniform Moment	Local x	-0.6000		0.0000	1.0000
23	Uniform Moment	Local x	-0.6000		0.0000	1.0000
24	Uniform Moment	Local x	-0.6000		0.0000	1.0000
25	Uniform Moment	Local x	-0.6000		0.0000	1.0000
26	Uniform Moment	Local x	-0.6000		0.0000	1.0000
27	Uniform Moment	Local x	-0.6000		0.0000	1.0000
28	Uniform Moment	Local x	-0.6000		0.0000	1.0000
29	Uniform Moment	Local x	-0.6000		0.0000	1.0000
30	Uniform Moment	Local x	-0.6000		0.0000	1.0000

LOAD CASE WS 45 deg 70mph, Member Loads

Member	Type	Direction	Magnitude at Start (kips or kips-ft)	Magnitude at End (kips or kips-ft)	Start Position (x/L)	End Position from start (x/L)
31	Uniform Moment	Local x	-0.6000		0.0000	1.0000
32	Uniform Moment	Local x	-0.6000		0.0000	1.0000
33	Uniform Moment	Local x	-0.6000		0.0000	1.0000
34	Uniform Moment	Local x	-0.6000		0.0000	1.0000
35	Uniform Moment	Local x	-0.6000		0.0000	1.0000
36	Uniform Moment	Local x	-0.6000		0.0000	1.0000
37	Uniform Moment	Local x	-0.6000		0.0000	1.0000
38	Uniform Moment	Local x	-0.6000		0.0000	1.0000
39	Uniform Moment	Local x	-0.6000		0.0000	1.0000
40	Uniform Moment	Local x	-0.6000		0.0000	1.0000
41	Uniform Moment	Local x	-0.6000		0.0000	1.0000
42	Uniform Moment	Local x	-0.6000		0.0000	1.0000
43	Uniform Moment	Local x	-0.6000		0.0000	1.0000
44	Uniform Moment	Local x	-0.6000		0.0000	1.0000
45	Uniform Moment	Local x	-0.6000		0.0000	1.0000
46	Uniform Moment	Local x	-0.6000		0.0000	1.0000
47	Uniform Moment	Local x	-0.6000		0.0000	1.0000
48	Uniform Moment	Local x	-0.6000		0.0000	1.0000
49	Uniform Moment	Local x	-0.6000		0.0000	1.0000
50	Uniform Moment	Local x	-0.6000		0.0000	1.0000
51	Uniform Moment	Local x	-0.6000		0.0000	1.0000
52	Uniform Moment	Local x	-0.6000		0.0000	1.0000
53	Uniform Moment	Local x	-0.6000		0.0000	1.0000
54	Uniform Moment	Local x	-0.6000		0.0000	1.0000
55	Uniform Moment	Local x	-0.6000		0.0000	1.0000
56	Uniform Moment	Local x	-0.6000		0.0000	1.0000
57	Uniform Moment	Local x	-0.6000		0.0000	1.0000
1	Uniform Force	Local x	0.1500		0.0000	1.0000
2	Uniform Force	Local x	0.1500		0.0000	1.0000
3	Uniform Force	Local x	0.1500		0.0000	1.0000
4	Uniform Force	Local x	0.1500		0.0000	1.0000
5	Uniform Force	Local x	0.1500		0.0000	1.0000
6	Uniform Force	Local x	0.1500		0.0000	1.0000
7	Uniform Force	Local x	0.1500		0.0000	1.0000

LOAD CASE WS 45 deg 70mph, Member Loads

Member	Type	Direction	Magnitude at Start (kips or kips-ft)	Magnitude at End (kips or kips-ft)	Start Position (x/L)	End Position from start (x/L)
8	Uniform Force	Local x	0.1500		0.0000	1.0000
9	Uniform Force	Local x	0.1500		0.0000	1.0000
10	Uniform Force	Local x	0.1500		0.0000	1.0000
11	Uniform Force	Local x	0.1500		0.0000	1.0000
12	Uniform Force	Local x	0.1500		0.0000	1.0000
13	Uniform Force	Local x	0.1500		0.0000	1.0000
14	Uniform Force	Local x	0.1500		0.0000	1.0000
15	Uniform Force	Local x	0.1500		0.0000	1.0000
16	Uniform Force	Local x	0.1500		0.0000	1.0000
17	Uniform Force	Local x	0.1500		0.0000	1.0000
18	Uniform Force	Local x	0.1500		0.0000	1.0000
19	Uniform Force	Local x	0.1500		0.0000	1.0000
20	Uniform Force	Local x	0.1500		0.0000	1.0000
21	Uniform Force	Local x	0.1500		0.0000	1.0000
22	Uniform Force	Local x	0.1500		0.0000	1.0000
23	Uniform Force	Local x	0.1500		0.0000	1.0000
24	Uniform Force	Local x	0.1500		0.0000	1.0000
25	Uniform Force	Local x	0.1500		0.0000	1.0000
26	Uniform Force	Local x	0.1500		0.0000	1.0000
27	Uniform Force	Local x	0.1500		0.0000	1.0000
28	Uniform Force	Local x	0.1500		0.0000	1.0000
29	Uniform Force	Local x	0.1500		0.0000	1.0000
30	Uniform Force	Local x	0.1500		0.0000	1.0000
31	Uniform Force	Local x	0.1500		0.0000	1.0000
32	Uniform Force	Local x	0.1500		0.0000	1.0000
33	Uniform Force	Local x	0.1500		0.0000	1.0000
34	Uniform Force	Local x	0.1500		0.0000	1.0000
35	Uniform Force	Local x	0.1500		0.0000	1.0000
36	Uniform Force	Local x	0.1500		0.0000	1.0000
37	Uniform Force	Local x	0.1500		0.0000	1.0000
38	Uniform Force	Local x	0.1500		0.0000	1.0000
39	Uniform Force	Local x	0.1500		0.0000	1.0000
40	Uniform Force	Local x	0.1500		0.0000	1.0000
41	Uniform Force	Local x	0.1500		0.0000	1.0000

LOAD CASE WS 45 deg 70mph, Member Loads

Member	Type	Direction	Magnitude at Start (kips or kips-ft)	Magnitude at End (kips or kips-ft)	Start Position (x/L)	End Position from start (x/L)
42	Uniform Force	Local x	0.1500		0.0000	1.0000
43	Uniform Force	Local x	0.1500		0.0000	1.0000
44	Uniform Force	Local x	0.1500		0.0000	1.0000
45	Uniform Force	Local x	0.1500		0.0000	1.0000
46	Uniform Force	Local x	0.1500		0.0000	1.0000
47	Uniform Force	Local x	0.1500		0.0000	1.0000
48	Uniform Force	Local x	0.1500		0.0000	1.0000
49	Uniform Force	Local x	0.1500		0.0000	1.0000
50	Uniform Force	Local x	0.1500		0.0000	1.0000
51	Uniform Force	Local x	0.1500		0.0000	1.0000
52	Uniform Force	Local x	0.1500		0.0000	1.0000
53	Uniform Force	Local x	0.1500		0.0000	1.0000
54	Uniform Force	Local x	0.1500		0.0000	1.0000
55	Uniform Force	Local x	0.1500		0.0000	1.0000
56	Uniform Force	Local x	0.1500		0.0000	1.0000
57	Uniform Force	Local x	0.1500		0.0000	1.0000
101	Uniform Force	Local x	0.0160		0.0000	1.0000
102	Uniform Force	Local x	0.0160		0.0000	1.0000
103	Uniform Force	Local x	0.0160		0.0000	1.0000
104	Uniform Force	Local x	0.0160		0.0000	1.0000
105	Uniform Force	Local x	0.0160		0.0000	1.0000
106	Uniform Force	Local x	0.0160		0.0000	1.0000
107	Uniform Force	Local x	0.0160		0.0000	1.0000
108	Uniform Force	Local x	0.0160		0.0000	1.0000
109	Uniform Force	Local x	0.0160		0.0000	1.0000
110	Uniform Force	Local x	0.0160		0.0000	1.0000
111	Uniform Force	Local x	0.0160		0.0000	1.0000
112	Uniform Force	Local x	0.0160		0.0000	1.0000
113	Uniform Force	Local x	0.0160		0.0000	1.0000
114	Uniform Force	Local x	0.0160		0.0000	1.0000
115	Uniform Force	Local x	0.0160		0.0000	1.0000
116	Uniform Force	Local x	0.0160		0.0000	1.0000
117	Uniform Force	Local x	0.0160		0.0000	1.0000
118	Uniform Force	Local x	0.0160		0.0000	1.0000

LOAD CASE WS 45 deg 70mph, Member Loads

Member	Type	Direction	Magnitude at Start (kips or kips-ft)	Magnitude at End (kips or kips-ft)	Start Position (x/L)	End Position from start (x/L)
119	Uniform Force	Local x	0.0160		0.0000	1.0000
120	Uniform Force	Local x	0.0160		0.0000	1.0000
121	Uniform Force	Local x	0.0160		0.0000	1.0000
122	Uniform Force	Local x	0.0160		0.0000	1.0000
123	Uniform Force	Local x	0.0160		0.0000	1.0000
124	Uniform Force	Local x	0.0160		0.0000	1.0000
125	Uniform Force	Local x	0.0160		0.0000	1.0000
126	Uniform Force	Local x	0.0160		0.0000	1.0000
127	Uniform Force	Local x	0.0160		0.0000	1.0000
128	Uniform Force	Local x	0.0160		0.0000	1.0000
129	Uniform Force	Local x	0.0160		0.0000	1.0000
130	Uniform Force	Local x	0.0160		0.0000	1.0000
131	Uniform Force	Local x	0.0160		0.0000	1.0000
132	Uniform Force	Local x	0.0160		0.0000	1.0000
133	Uniform Force	Local x	0.0160		0.0000	1.0000
134	Uniform Force	Local x	0.0160		0.0000	1.0000
135	Uniform Force	Local x	0.0160		0.0000	1.0000
136	Uniform Force	Local x	0.0160		0.0000	1.0000
137	Uniform Force	Local x	0.0160		0.0000	1.0000
138	Uniform Force	Local x	0.0160		0.0000	1.0000
139	Uniform Force	Local x	0.0160		0.0000	1.0000
140	Uniform Force	Local x	0.0160		0.0000	1.0000
141	Uniform Force	Local x	0.0160		0.0000	1.0000
142	Uniform Force	Local x	0.0160		0.0000	1.0000
143	Uniform Force	Local x	0.0160		0.0000	1.0000
144	Uniform Force	Local x	0.0160		0.0000	1.0000
145	Uniform Force	Local x	0.0160		0.0000	1.0000
146	Uniform Force	Local x	0.0160		0.0000	1.0000
147	Uniform Force	Local x	0.0160		0.0000	1.0000
148	Uniform Force	Local x	0.0160		0.0000	1.0000
149	Uniform Force	Local x	0.0160		0.0000	1.0000
150	Uniform Force	Local x	0.0160		0.0000	1.0000
151	Uniform Force	Local x	0.0160		0.0000	1.0000
152	Uniform Force	Local x	0.0160		0.0000	1.0000

LOAD CASE WS 45 deg 70mph, Member Loads

Member	Type	Direction	Magnitude at Start (kips or kips-ft)	Magnitude at End (kips or kips-ft)	Start Position (x/L)	End Position from start (x/L)
153	Uniform Force	Local x	0.0160		0.0000	1.0000
154	Uniform Force	Local x	0.0160		0.0000	1.0000
155	Uniform Force	Local x	0.0160		0.0000	1.0000
156	Uniform Force	Local x	0.0160		0.0000	1.0000
157	Uniform Force	Local x	0.0160		0.0000	1.0000
158	Uniform Force	Local x	0.0160		0.0000	1.0000
159	Uniform Force	Local x	0.0160		0.0000	1.0000
160	Uniform Force	Local x	0.0160		0.0000	1.0000
701	Uniform Force	Global X	0.0150		0.0000	1.0000
702	Uniform Force	Global X	0.0150		0.0000	1.0000
703	Uniform Force	Global X	0.0150		0.0000	1.0000
704	Uniform Force	Global X	0.0150		0.0000	1.0000
705	Uniform Force	Global X	0.0150		0.0000	1.0000
706	Uniform Force	Global X	0.0150		0.0000	1.0000
707	Uniform Force	Global X	0.0150		0.0000	1.0000
708	Uniform Force	Global X	0.0150		0.0000	1.0000
709	Uniform Force	Global X	0.0150		0.0000	1.0000
710	Uniform Force	Global X	0.0150		0.0000	1.0000
711	Uniform Force	Global X	0.0150		0.0000	1.0000
712	Uniform Force	Global X	0.0150		0.0000	1.0000
713	Uniform Force	Global X	0.0150		0.0000	1.0000
714	Uniform Force	Global X	0.0150		0.0000	1.0000
715	Uniform Force	Global X	0.0150		0.0000	1.0000
716	Uniform Force	Global X	0.0150		0.0000	1.0000
717	Uniform Force	Global X	0.0150		0.0000	1.0000
718	Uniform Force	Global X	0.0150		0.0000	1.0000
719	Uniform Force	Global X	0.0150		0.0000	1.0000
720	Uniform Force	Global X	0.0150		0.0000	1.0000
721	Uniform Force	Global X	0.0150		0.0000	1.0000
722	Uniform Force	Global X	0.0150		0.0000	1.0000
723	Uniform Force	Global X	0.0150		0.0000	1.0000
724	Uniform Force	Global X	0.0150		0.0000	1.0000
725	Uniform Force	Global X	0.0150		0.0000	1.0000
726	Uniform Force	Global X	0.0150		0.0000	1.0000

LOAD CASE WS 45 deg 70mph, Member Loads

Member	Type	Direction	Magnitude at Start (kips or kips-ft)	Magnitude at End (kips or kips-ft)	Start Position (x/L)	End Position from start (x/L)
727	Uniform Force	Global X	0.0150		0.0000	1.0000
728	Uniform Force	Global X	0.0150		0.0000	1.0000
729	Uniform Force	Global X	0.0150		0.0000	1.0000
730	Uniform Force	Global X	0.0150		0.0000	1.0000
731	Uniform Force	Global X	0.0150		0.0000	1.0000
732	Uniform Force	Global X	0.0150		0.0000	1.0000
733	Uniform Force	Global X	0.0150		0.0000	1.0000
740	Uniform Force	Global X	0.0150		0.0000	1.0000
741	Uniform Force	Global X	0.0150		0.0000	1.0000
742	Uniform Force	Global X	0.0150		0.0000	1.0000
743	Uniform Force	Global X	0.0150		0.0000	1.0000
744	Uniform Force	Global X	0.0150		0.0000	1.0000
745	Uniform Force	Global X	0.0150		0.0000	1.0000
746	Uniform Force	Global X	0.0150		0.0000	1.0000
747	Uniform Force	Global X	0.0150		0.0000	1.0000
748	Uniform Force	Global X	0.0150		0.0000	1.0000
749	Uniform Force	Global X	0.0150		0.0000	1.0000
750	Uniform Force	Global X	0.0150		0.0000	1.0000
751	Uniform Force	Global X	0.0150		0.0000	1.0000
752	Uniform Force	Global X	0.0150		0.0000	1.0000
753	Uniform Force	Global X	0.0150		0.0000	1.0000
754	Uniform Force	Global X	0.0150		0.0000	1.0000
755	Uniform Force	Global X	0.0150		0.0000	1.0000
756	Uniform Force	Global X	0.0150		0.0000	1.0000
757	Uniform Force	Global X	0.0150		0.0000	1.0000
758	Uniform Force	Global X	0.0150		0.0000	1.0000
759	Uniform Force	Global X	0.0150		0.0000	1.0000
760	Uniform Force	Global X	0.0150		0.0000	1.0000
761	Uniform Force	Global X	0.0150		0.0000	1.0000
762	Uniform Force	Global X	0.0150		0.0000	1.0000
763	Uniform Force	Global X	0.0150		0.0000	1.0000
764	Uniform Force	Global X	0.0150		0.0000	1.0000
765	Uniform Force	Global X	0.0150		0.0000	1.0000
766	Uniform Force	Global X	0.0150		0.0000	1.0000

LOAD CASE WS 45 deg 70mph, Member Loads

Member	Type	Direction	Magnitude at Start (kips or kips-ft)	Magnitude at End (kips or kips-ft)	Start Position (x/L)	End Position from start (x/L)
767	Uniform Force	Global X	0.0150		0.0000	1.0000
768	Uniform Force	Global X	0.0150		0.0000	1.0000
769	Uniform Force	Global X	0.0150		0.0000	1.0000
770	Uniform Force	Global X	0.0150		0.0000	1.0000
771	Uniform Force	Global X	0.0150		0.0000	1.0000
772	Uniform Force	Global X	0.0150		0.0000	1.0000
2002	Uniform Force	Global Y	0.0600		0.0000	1.0000
2003	Uniform Force	Global Y	0.0600		0.0000	1.0000
2002	Trapezoidal Force	Global X	0.1800	0.1400	0.0000	1.0000
2003	Trapezoidal Force	Global X	0.1400	0.1000	0.0000	1.0000
1017	Uniform Force	Global Y	0.0500		0.0000	1.0000
1018	Uniform Force	Global Y	0.0500		0.0000	1.0000
1019	Uniform Force	Global Y	0.0500		0.0000	1.0000
1017	Uniform Force	Global X	0.0200		0.0000	1.0000
1018	Uniform Force	Global X	0.0200		0.0000	1.0000
1019	Uniform Force	Global X	0.0200		0.0000	1.0000
1013	Uniform Force	Global Y	0.0500		0.0000	1.0000
1014	Uniform Force	Global Y	0.0500		0.0000	1.0000
1015	Uniform Force	Global Y	0.0500		0.0000	1.0000
1013	Uniform Force	Global X	0.0200		0.0000	1.0000
1014	Uniform Force	Global X	0.0200		0.0000	1.0000
1015	Uniform Force	Global X	0.0200		0.0000	1.0000
3017	Uniform Force	Global Y	0.0500		0.0000	1.0000
3018	Uniform Force	Global Y	0.0500		0.0000	1.0000
3019	Uniform Force	Global Y	0.0500		0.0000	1.0000
3017	Uniform Force	Global X	0.0200		0.0000	1.0000
3018	Uniform Force	Global X	0.0200		0.0000	1.0000
3019	Uniform Force	Global X	0.0200		0.0000	1.0000
3013	Uniform Force	Global Y	0.0500		0.0000	1.0000
3014	Uniform Force	Global Y	0.0500		0.0000	1.0000
3015	Uniform Force	Global Y	0.0500		0.0000	1.0000
3013	Uniform Force	Global X	0.0200		0.0000	1.0000
3014	Uniform Force	Global X	0.0200		0.0000	1.0000
3015	Uniform Force	Global X	0.0200		0.0000	1.0000

LOAD CASE WS 45 deg 70mph, Member Loads

Member	Type	Direction	Magnitude at Start (kips or kips-ft)	Magnitude at End (kips or kips-ft)	Start Position (x/L)	End Position from start (x/L)
1006	Uniform Force	Global X	0.0500		0.0000	1.0000
1007	Uniform Force	Global X	0.0500		0.0000	1.0000
1008	Uniform Force	Global X	0.0500		0.0000	1.0000
1009	Uniform Force	Global X	0.0500		0.0000	1.0000
1010	Uniform Force	Global X	0.0500		0.0000	1.0000
1011	Uniform Force	Global X	0.0500		0.0000	1.0000
1012	Uniform Force	Global X	0.0500		0.0000	1.0000
3006	Uniform Force	Global X	0.0500		0.0000	1.0000
3007	Uniform Force	Global X	0.0500		0.0000	1.0000
3008	Uniform Force	Global X	0.0500		0.0000	1.0000
3009	Uniform Force	Global X	0.0500		0.0000	1.0000
3010	Uniform Force	Global X	0.0500		0.0000	1.0000
3011	Uniform Force	Global X	0.0500		0.0000	1.0000
3012	Uniform Force	Global X	0.0500		0.0000	1.0000
501	Uniform Force	Global Y	0.0150		0.0000	1.0000
502	Uniform Force	Global Y	0.0150		0.0000	1.0000
503	Uniform Force	Global Y	0.0150		0.0000	1.0000
504	Uniform Force	Global Y	0.0150		0.0000	1.0000
505	Uniform Force	Global Y	0.0150		0.0000	1.0000
601	Uniform Force	Global Y	0.0150		0.0000	1.0000
602	Uniform Force	Global Y	0.0150		0.0000	1.0000
603	Uniform Force	Global Y	0.0150		0.0000	1.0000
604	Uniform Force	Global Y	0.0150		0.0000	1.0000
605	Uniform Force	Global Y	0.0150		0.0000	1.0000
401	Uniform Force	Global Y	0.0600		0.0000	1.0000
402	Uniform Force	Global Y	0.0600		0.0000	1.0000
403	Uniform Force	Global Y	0.0600		0.0000	1.0000
405	Trapezoidal Force	Global Y	0.0800	0.0700	0.0000	1.0000
406	Trapezoidal Force	Global Y	0.0700	0.0700	0.0000	1.0000
407	Trapezoidal Force	Global Y	0.0700	0.0700	0.0000	1.0000
408	Trapezoidal Force	Global Y	0.0700	0.0600	0.0000	1.0000
409	Trapezoidal Force	Global Y	0.0600	0.0600	0.0000	1.0000
410	Trapezoidal Force	Global Y	0.0600	0.0600	0.0000	1.0000
411	Trapezoidal Force	Global Y	0.0600	0.0500	0.0000	1.0000

LOAD CASE WS 45 deg 70mph, Member Loads

Member	Type	Direction	Magnitude at Start (kips or kips-ft)	Magnitude at End (kips or kips-ft)	Start Position (x/L)	End Position from start (x/L)
412	Trapezoidal Force	Global Y	0.0500	0.0500	0.0000	1.0000
413	Trapezoidal Force	Global Y	0.0500	0.0500	0.0000	1.0000
501	Uniform Force	Global X	0.0150		0.0000	1.0000
502	Uniform Force	Global X	0.0150		0.0000	1.0000
503	Uniform Force	Global X	0.0150		0.0000	1.0000
504	Uniform Force	Global X	0.0150		0.0000	1.0000
505	Uniform Force	Global X	0.0150		0.0000	1.0000
601	Uniform Force	Global X	0.0150		0.0000	1.0000
602	Uniform Force	Global X	0.0150		0.0000	1.0000
603	Uniform Force	Global X	0.0150		0.0000	1.0000
604	Uniform Force	Global X	0.0150		0.0000	1.0000
605	Uniform Force	Global X	0.0150		0.0000	1.0000
401	Uniform Force	Global X	0.0500		0.0000	1.0000
402	Uniform Force	Global X	0.0500		0.0000	1.0000
403	Uniform Force	Global X	0.0500		0.0000	1.0000
405	Trapezoidal Force	Global X	0.0800	0.0700	0.0000	1.0000
406	Trapezoidal Force	Global X	0.0700	0.0700	0.0000	1.0000
407	Trapezoidal Force	Global X	0.0700	0.0700	0.0000	1.0000
408	Trapezoidal Force	Global X	0.0700	0.0600	0.0000	1.0000
409	Trapezoidal Force	Global X	0.0600	0.0600	0.0000	1.0000
410	Trapezoidal Force	Global X	0.0600	0.0600	0.0000	1.0000
411	Trapezoidal Force	Global X	0.0600	0.0500	0.0000	1.0000
412	Trapezoidal Force	Global X	0.0500	0.0500	0.0000	1.0000
413	Trapezoidal Force	Global X	0.0500	0.0500	0.0000	1.0000

LOAD CASE WS_30 deg_70mph, Member Loads

Member	Type	Direction	Magnitude at Start (kips or kips-ft)	Magnitude at End (kips or kips-ft)	Start Position (x/L)	End Position from start (x/L)
1	Uniform Force	Global Y	0.2400		0.0000	1.0000
2	Uniform Force	Global Y	0.2400		0.0000	1.0000
3	Uniform Force	Global Y	0.2400		0.0000	1.0000
4	Uniform Force	Global Y	0.2400		0.0000	1.0000
5	Uniform Force	Global Y	0.2400		0.0000	1.0000

LOAD CASE WS 30 deg 70mph, Member Loads

Member	Type	Direction	Magnitude at Start (kips or kips-ft)	Magnitude at End (kips or kips-ft)	Start Position (x/L)	End Position from start (x/L)
6	Uniform Force	Global Y	0.2400		0.0000	1.0000
7	Uniform Force	Global Y	0.2400		0.0000	1.0000
8	Uniform Force	Global Y	0.2400		0.0000	1.0000
9	Uniform Force	Global Y	0.2400		0.0000	1.0000
10	Uniform Force	Global Y	0.2400		0.0000	1.0000
11	Uniform Force	Global Y	0.2400		0.0000	1.0000
12	Uniform Force	Global Y	0.2400		0.0000	1.0000
13	Uniform Force	Global Y	0.2400		0.0000	1.0000
14	Uniform Force	Global Y	0.2400		0.0000	1.0000
15	Uniform Force	Global Y	0.2400		0.0000	1.0000
16	Uniform Force	Global Y	0.2400		0.0000	1.0000
17	Uniform Force	Global Y	0.2400		0.0000	1.0000
18	Uniform Force	Global Y	0.2400		0.0000	1.0000
19	Uniform Force	Global Y	0.2400		0.0000	1.0000
20	Uniform Force	Global Y	0.2400		0.0000	1.0000
21	Uniform Force	Global Y	0.2400		0.0000	1.0000
22	Uniform Force	Global Y	0.2400		0.0000	1.0000
23	Uniform Force	Global Y	0.2400		0.0000	1.0000
24	Uniform Force	Global Y	0.2400		0.0000	1.0000
25	Uniform Force	Global Y	0.2400		0.0000	1.0000
26	Uniform Force	Global Y	0.2400		0.0000	1.0000
27	Uniform Force	Global Y	0.2400		0.0000	1.0000
28	Uniform Force	Global Y	0.2400		0.0000	1.0000
29	Uniform Force	Global Y	0.2400		0.0000	1.0000
30	Uniform Force	Global Y	0.2400		0.0000	1.0000
31	Uniform Force	Global Y	0.2400		0.0000	1.0000
32	Uniform Force	Global Y	0.2400		0.0000	1.0000
33	Uniform Force	Global Y	0.2400		0.0000	1.0000
34	Uniform Force	Global Y	0.2400		0.0000	1.0000
35	Uniform Force	Global Y	0.2400		0.0000	1.0000
36	Uniform Force	Global Y	0.2400		0.0000	1.0000
37	Uniform Force	Global Y	0.2400		0.0000	1.0000
38	Uniform Force	Global Y	0.2400		0.0000	1.0000
39	Uniform Force	Global Y	0.2400		0.0000	1.0000

LOAD CASE WS 30 deg 70mph, Member Loads

Member	Type	Direction	Magnitude at Start (kips or kips-ft)	Magnitude at End (kips or kips-ft)	Start Position (x/L)	End Position from start (x/L)
40	Uniform Force	Global Y	0.2400		0.0000	1.0000
41	Uniform Force	Global Y	0.2400		0.0000	1.0000
42	Uniform Force	Global Y	0.2400		0.0000	1.0000
43	Uniform Force	Global Y	0.2400		0.0000	1.0000
44	Uniform Force	Global Y	0.2400		0.0000	1.0000
45	Uniform Force	Global Y	0.2400		0.0000	1.0000
46	Uniform Force	Global Y	0.2400		0.0000	1.0000
47	Uniform Force	Global Y	0.2400		0.0000	1.0000
48	Uniform Force	Global Y	0.2400		0.0000	1.0000
49	Uniform Force	Global Y	0.2400		0.0000	1.0000
50	Uniform Force	Global Y	0.2400		0.0000	1.0000
51	Uniform Force	Global Y	0.2400		0.0000	1.0000
52	Uniform Force	Global Y	0.2400		0.0000	1.0000
53	Uniform Force	Global Y	0.2400		0.0000	1.0000
54	Uniform Force	Global Y	0.2400		0.0000	1.0000
55	Uniform Force	Global Y	0.2400		0.0000	1.0000
56	Uniform Force	Global Y	0.2400		0.0000	1.0000
57	Uniform Force	Global Y	0.2400		0.0000	1.0000
101	Uniform Force	Global Y	0.0250		0.0000	1.0000
102	Uniform Force	Global Y	0.0250		0.0000	1.0000
103	Uniform Force	Global Y	0.0250		0.0000	1.0000
104	Uniform Force	Global Y	0.0250		0.0000	1.0000
105	Uniform Force	Global Y	0.0250		0.0000	1.0000
106	Uniform Force	Global Y	0.0250		0.0000	1.0000
107	Uniform Force	Global Y	0.0250		0.0000	1.0000
108	Uniform Force	Global Y	0.0250		0.0000	1.0000
109	Uniform Force	Global Y	0.0250		0.0000	1.0000
110	Uniform Force	Global Y	0.0250		0.0000	1.0000
111	Uniform Force	Global Y	0.0250		0.0000	1.0000
112	Uniform Force	Global Y	0.0250		0.0000	1.0000
113	Uniform Force	Global Y	0.0250		0.0000	1.0000
114	Uniform Force	Global Y	0.0250		0.0000	1.0000
115	Uniform Force	Global Y	0.0250		0.0000	1.0000
116	Uniform Force	Global Y	0.0250		0.0000	1.0000

LOAD CASE WS 30 deg 70mph, Member Loads

Member	Type	Direction	Magnitude at Start (kips or kips-ft)	Magnitude at End (kips or kips-ft)	Start Position (x/L)	End Position from start (x/L)
117	Uniform Force	Global Y	0.0250		0.0000	1.0000
118	Uniform Force	Global Y	0.0250		0.0000	1.0000
119	Uniform Force	Global Y	0.0250		0.0000	1.0000
120	Uniform Force	Global Y	0.0250		0.0000	1.0000
121	Uniform Force	Global Y	0.0250		0.0000	1.0000
122	Uniform Force	Global Y	0.0250		0.0000	1.0000
123	Uniform Force	Global Y	0.0250		0.0000	1.0000
124	Uniform Force	Global Y	0.0250		0.0000	1.0000
125	Uniform Force	Global Y	0.0250		0.0000	1.0000
126	Uniform Force	Global Y	0.0250		0.0000	1.0000
127	Uniform Force	Global Y	0.0250		0.0000	1.0000
128	Uniform Force	Global Y	0.0250		0.0000	1.0000
129	Uniform Force	Global Y	0.0250		0.0000	1.0000
130	Uniform Force	Global Y	0.0250		0.0000	1.0000
131	Uniform Force	Global Y	0.0250		0.0000	1.0000
132	Uniform Force	Global Y	0.0250		0.0000	1.0000
133	Uniform Force	Global Y	0.0250		0.0000	1.0000
134	Uniform Force	Global Y	0.0250		0.0000	1.0000
135	Uniform Force	Global Y	0.0250		0.0000	1.0000
136	Uniform Force	Global Y	0.0250		0.0000	1.0000
137	Uniform Force	Global Y	0.0250		0.0000	1.0000
138	Uniform Force	Global Y	0.0250		0.0000	1.0000
139	Uniform Force	Global Y	0.0250		0.0000	1.0000
140	Uniform Force	Global Y	0.0250		0.0000	1.0000
141	Uniform Force	Global Y	0.0250		0.0000	1.0000
142	Uniform Force	Global Y	0.0250		0.0000	1.0000
143	Uniform Force	Global Y	0.0250		0.0000	1.0000
144	Uniform Force	Global Y	0.0250		0.0000	1.0000
145	Uniform Force	Global Y	0.0250		0.0000	1.0000
146	Uniform Force	Global Y	0.0250		0.0000	1.0000
147	Uniform Force	Global Y	0.0250		0.0000	1.0000
148	Uniform Force	Global Y	0.0250		0.0000	1.0000
149	Uniform Force	Global Y	0.0250		0.0000	1.0000
150	Uniform Force	Global Y	0.0250		0.0000	1.0000

LOAD CASE WS 30 deg 70mph, Member Loads

Member	Type	Direction	Magnitude at Start (kips or kips-ft)	Magnitude at End (kips or kips-ft)	Start Position (x/L)	End Position from start (x/L)
151	Uniform Force	Global Y	0.0250		0.0000	1.0000
152	Uniform Force	Global Y	0.0250		0.0000	1.0000
153	Uniform Force	Global Y	0.0250		0.0000	1.0000
154	Uniform Force	Global Y	0.0250		0.0000	1.0000
155	Uniform Force	Global Y	0.0250		0.0000	1.0000
156	Uniform Force	Global Y	0.0250		0.0000	1.0000
157	Uniform Force	Global Y	0.0250		0.0000	1.0000
158	Uniform Force	Global Y	0.0250		0.0000	1.0000
159	Uniform Force	Global Y	0.0250		0.0000	1.0000
160	Uniform Force	Global Y	0.0250		0.0000	1.0000
701	Uniform Force	Global Y	0.0240		0.0000	1.0000
702	Uniform Force	Global Y	0.0240		0.0000	1.0000
703	Uniform Force	Global Y	0.0240		0.0000	1.0000
704	Uniform Force	Global Y	0.0240		0.0000	1.0000
705	Uniform Force	Global Y	0.0240		0.0000	1.0000
706	Uniform Force	Global Y	0.0240		0.0000	1.0000
707	Uniform Force	Global Y	0.0240		0.0000	1.0000
708	Uniform Force	Global Y	0.0240		0.0000	1.0000
709	Uniform Force	Global Y	0.0240		0.0000	1.0000
710	Uniform Force	Global Y	0.0240		0.0000	1.0000
711	Uniform Force	Global Y	0.0240		0.0000	1.0000
712	Uniform Force	Global Y	0.0240		0.0000	1.0000
713	Uniform Force	Global Y	0.0240		0.0000	1.0000
714	Uniform Force	Global Y	0.0240		0.0000	1.0000
715	Uniform Force	Global Y	0.0240		0.0000	1.0000
716	Uniform Force	Global Y	0.0240		0.0000	1.0000
717	Uniform Force	Global Y	0.0240		0.0000	1.0000
718	Uniform Force	Global Y	0.0240		0.0000	1.0000
719	Uniform Force	Global Y	0.0240		0.0000	1.0000
720	Uniform Force	Global Y	0.0240		0.0000	1.0000
721	Uniform Force	Global Y	0.0240		0.0000	1.0000
722	Uniform Force	Global Y	0.0240		0.0000	1.0000
723	Uniform Force	Global Y	0.0240		0.0000	1.0000
724	Uniform Force	Global Y	0.0240		0.0000	1.0000

LOAD CASE WS 30 deg 70mph, Member Loads

Member	Type	Direction	Magnitude at Start (kips or kips-ft)	Magnitude at End (kips or kips-ft)	Start Position (x/L)	End Position from start (x/L)
725	Uniform Force	Global Y	0.0240		0.0000	1.0000
726	Uniform Force	Global Y	0.0240		0.0000	1.0000
727	Uniform Force	Global Y	0.0240		0.0000	1.0000
728	Uniform Force	Global Y	0.0240		0.0000	1.0000
729	Uniform Force	Global Y	0.0240		0.0000	1.0000
730	Uniform Force	Global Y	0.0240		0.0000	1.0000
731	Uniform Force	Global Y	0.0240		0.0000	1.0000
732	Uniform Force	Global Y	0.0240		0.0000	1.0000
733	Uniform Force	Global Y	0.0240		0.0000	1.0000
740	Uniform Force	Global Y	0.0240		0.0000	1.0000
741	Uniform Force	Global Y	0.0240		0.0000	1.0000
742	Uniform Force	Global Y	0.0240		0.0000	1.0000
743	Uniform Force	Global Y	0.0240		0.0000	1.0000
744	Uniform Force	Global Y	0.0240		0.0000	1.0000
745	Uniform Force	Global Y	0.0240		0.0000	1.0000
746	Uniform Force	Global Y	0.0240		0.0000	1.0000
747	Uniform Force	Global Y	0.0240		0.0000	1.0000
748	Uniform Force	Global Y	0.0240		0.0000	1.0000
749	Uniform Force	Global Y	0.0240		0.0000	1.0000
750	Uniform Force	Global Y	0.0240		0.0000	1.0000
751	Uniform Force	Global Y	0.0240		0.0000	1.0000
752	Uniform Force	Global Y	0.0240		0.0000	1.0000
753	Uniform Force	Global Y	0.0240		0.0000	1.0000
754	Uniform Force	Global Y	0.0240		0.0000	1.0000
755	Uniform Force	Global Y	0.0240		0.0000	1.0000
756	Uniform Force	Global Y	0.0240		0.0000	1.0000
757	Uniform Force	Global Y	0.0240		0.0000	1.0000
758	Uniform Force	Global Y	0.0240		0.0000	1.0000
759	Uniform Force	Global Y	0.0240		0.0000	1.0000
760	Uniform Force	Global Y	0.0240		0.0000	1.0000
761	Uniform Force	Global Y	0.0240		0.0000	1.0000
762	Uniform Force	Global Y	0.0240		0.0000	1.0000
763	Uniform Force	Global Y	0.0240		0.0000	1.0000
764	Uniform Force	Global Y	0.0240		0.0000	1.0000

LOAD CASE WS 30 deg 70mph, Member Loads

Member	Type	Direction	Magnitude at Start (kips or kips-ft)	Magnitude at End (kips or kips-ft)	Start Position (x/L)	End Position from start (x/L)
765	Uniform Force	Global Y	0.0240		0.0000	1.0000
766	Uniform Force	Global Y	0.0240		0.0000	1.0000
767	Uniform Force	Global Y	0.0240		0.0000	1.0000
768	Uniform Force	Global Y	0.0240		0.0000	1.0000
769	Uniform Force	Global Y	0.0240		0.0000	1.0000
770	Uniform Force	Global Y	0.0240		0.0000	1.0000
771	Uniform Force	Global Y	0.0240		0.0000	1.0000
772	Uniform Force	Global Y	0.0240		0.0000	1.0000
1	Uniform Moment	Local x	-0.8400		0.0000	1.0000
2	Uniform Moment	Local x	-0.8400		0.0000	1.0000
3	Uniform Moment	Local x	-0.8400		0.0000	1.0000
4	Uniform Moment	Local x	-0.8400		0.0000	1.0000
5	Uniform Moment	Local x	-0.8400		0.0000	1.0000
6	Uniform Moment	Local x	-0.8400		0.0000	1.0000
7	Uniform Moment	Local x	-0.8400		0.0000	1.0000
8	Uniform Moment	Local x	-0.8400		0.0000	1.0000
9	Uniform Moment	Local x	-0.8400		0.0000	1.0000
10	Uniform Moment	Local x	-0.8400		0.0000	1.0000
11	Uniform Moment	Local x	-0.8400		0.0000	1.0000
12	Uniform Moment	Local x	-0.8400		0.0000	1.0000
13	Uniform Moment	Local x	-0.8400		0.0000	1.0000
14	Uniform Moment	Local x	-0.8400		0.0000	1.0000
15	Uniform Moment	Local x	-0.8400		0.0000	1.0000
16	Uniform Moment	Local x	-0.8400		0.0000	1.0000
17	Uniform Moment	Local x	-0.8400		0.0000	1.0000
18	Uniform Moment	Local x	-0.8400		0.0000	1.0000
19	Uniform Moment	Local x	-0.8400		0.0000	1.0000
20	Uniform Moment	Local x	-0.8400		0.0000	1.0000
21	Uniform Moment	Local x	-0.8400		0.0000	1.0000
22	Uniform Moment	Local x	-0.8400		0.0000	1.0000
23	Uniform Moment	Local x	-0.8400		0.0000	1.0000
24	Uniform Moment	Local x	-0.8400		0.0000	1.0000
25	Uniform Moment	Local x	-0.8400		0.0000	1.0000
26	Uniform Moment	Local x	-0.8400		0.0000	1.0000

LOAD CASE WS 30 deg 70mph, Member Loads

Member	Type	Direction	Magnitude at Start (kips or kips-ft)	Magnitude at End (kips or kips-ft)	Start Position (x/L)	End Position from start (x/L)
27	Uniform Moment	Local x	-0.8400		0.0000	1.0000
28	Uniform Moment	Local x	-0.8400		0.0000	1.0000
29	Uniform Moment	Local x	-0.8400		0.0000	1.0000
30	Uniform Moment	Local x	-0.8400		0.0000	1.0000
31	Uniform Moment	Local x	-0.8400		0.0000	1.0000
32	Uniform Moment	Local x	-0.8400		0.0000	1.0000
33	Uniform Moment	Local x	-0.8400		0.0000	1.0000
34	Uniform Moment	Local x	-0.8400		0.0000	1.0000
35	Uniform Moment	Local x	-0.8400		0.0000	1.0000
36	Uniform Moment	Local x	-0.8400		0.0000	1.0000
37	Uniform Moment	Local x	-0.8400		0.0000	1.0000
38	Uniform Moment	Local x	-0.8400		0.0000	1.0000
39	Uniform Moment	Local x	-0.8400		0.0000	1.0000
40	Uniform Moment	Local x	-0.8400		0.0000	1.0000
41	Uniform Moment	Local x	-0.8400		0.0000	1.0000
42	Uniform Moment	Local x	-0.8400		0.0000	1.0000
43	Uniform Moment	Local x	-0.8400		0.0000	1.0000
44	Uniform Moment	Local x	-0.8400		0.0000	1.0000
45	Uniform Moment	Local x	-0.8400		0.0000	1.0000
46	Uniform Moment	Local x	-0.8400		0.0000	1.0000
47	Uniform Moment	Local x	-0.8400		0.0000	1.0000
48	Uniform Moment	Local x	-0.8400		0.0000	1.0000
49	Uniform Moment	Local x	-0.8400		0.0000	1.0000
50	Uniform Moment	Local x	-0.8400		0.0000	1.0000
51	Uniform Moment	Local x	-0.8400		0.0000	1.0000
52	Uniform Moment	Local x	-0.8400		0.0000	1.0000
53	Uniform Moment	Local x	-0.8400		0.0000	1.0000
54	Uniform Moment	Local x	-0.8400		0.0000	1.0000
55	Uniform Moment	Local x	-0.8400		0.0000	1.0000
56	Uniform Moment	Local x	-0.8400		0.0000	1.0000
57	Uniform Moment	Local x	-0.8400		0.0000	1.0000
1	Uniform Force	Local x	0.1000		0.0000	1.0000
2	Uniform Force	Local x	0.1000		0.0000	1.0000
3	Uniform Force	Local x	0.1000		0.0000	1.0000

LOAD CASE WS 30 deg 70mph, Member Loads

Member	Type	Direction	Magnitude at Start (kips or kips-ft)	Magnitude at End (kips or kips-ft)	Start Position (x/L)	End Position from start (x/L)
4	Uniform Force	Local x	0.1000		0.0000	1.0000
5	Uniform Force	Local x	0.1000		0.0000	1.0000
6	Uniform Force	Local x	0.1000		0.0000	1.0000
7	Uniform Force	Local x	0.1000		0.0000	1.0000
8	Uniform Force	Local x	0.1000		0.0000	1.0000
9	Uniform Force	Local x	0.1000		0.0000	1.0000
10	Uniform Force	Local x	0.1000		0.0000	1.0000
11	Uniform Force	Local x	0.1000		0.0000	1.0000
12	Uniform Force	Local x	0.1000		0.0000	1.0000
13	Uniform Force	Local x	0.1000		0.0000	1.0000
14	Uniform Force	Local x	0.1000		0.0000	1.0000
15	Uniform Force	Local x	0.1000		0.0000	1.0000
16	Uniform Force	Local x	0.1000		0.0000	1.0000
17	Uniform Force	Local x	0.1000		0.0000	1.0000
18	Uniform Force	Local x	0.1000		0.0000	1.0000
19	Uniform Force	Local x	0.1000		0.0000	1.0000
20	Uniform Force	Local x	0.1000		0.0000	1.0000
21	Uniform Force	Local x	0.1000		0.0000	1.0000
22	Uniform Force	Local x	0.1000		0.0000	1.0000
23	Uniform Force	Local x	0.1000		0.0000	1.0000
24	Uniform Force	Local x	0.1000		0.0000	1.0000
25	Uniform Force	Local x	0.1000		0.0000	1.0000
26	Uniform Force	Local x	0.1000		0.0000	1.0000
27	Uniform Force	Local x	0.1000		0.0000	1.0000
28	Uniform Force	Local x	0.1000		0.0000	1.0000
29	Uniform Force	Local x	0.1000		0.0000	1.0000
30	Uniform Force	Local x	0.1000		0.0000	1.0000
31	Uniform Force	Local x	0.1000		0.0000	1.0000
32	Uniform Force	Local x	0.1000		0.0000	1.0000
33	Uniform Force	Local x	0.1000		0.0000	1.0000
34	Uniform Force	Local x	0.1000		0.0000	1.0000
35	Uniform Force	Local x	0.1000		0.0000	1.0000
36	Uniform Force	Local x	0.1000		0.0000	1.0000
37	Uniform Force	Local x	0.1000		0.0000	1.0000

LOAD CASE WS 30 deg 70mph, Member Loads

Member	Type	Direction	Magnitude at Start (kips or kips-ft)	Magnitude at End (kips or kips-ft)	Start Position (x/L)	End Position from start (x/L)
38	Uniform Force	Local x	0.1000		0.0000	1.0000
39	Uniform Force	Local x	0.1000		0.0000	1.0000
40	Uniform Force	Local x	0.1000		0.0000	1.0000
41	Uniform Force	Local x	0.1000		0.0000	1.0000
42	Uniform Force	Local x	0.1000		0.0000	1.0000
43	Uniform Force	Local x	0.1000		0.0000	1.0000
44	Uniform Force	Local x	0.1000		0.0000	1.0000
45	Uniform Force	Local x	0.1000		0.0000	1.0000
46	Uniform Force	Local x	0.1000		0.0000	1.0000
47	Uniform Force	Local x	0.1000		0.0000	1.0000
48	Uniform Force	Local x	0.1000		0.0000	1.0000
49	Uniform Force	Local x	0.1000		0.0000	1.0000
50	Uniform Force	Local x	0.1000		0.0000	1.0000
51	Uniform Force	Local x	0.1000		0.0000	1.0000
52	Uniform Force	Local x	0.1000		0.0000	1.0000
53	Uniform Force	Local x	0.1000		0.0000	1.0000
54	Uniform Force	Local x	0.1000		0.0000	1.0000
55	Uniform Force	Local x	0.1000		0.0000	1.0000
56	Uniform Force	Local x	0.1000		0.0000	1.0000
57	Uniform Force	Local x	0.1000		0.0000	1.0000
101	Uniform Force	Local x	0.0110		0.0000	1.0000
102	Uniform Force	Local x	0.0110		0.0000	1.0000
103	Uniform Force	Local x	0.0110		0.0000	1.0000
104	Uniform Force	Local x	0.0110		0.0000	1.0000
105	Uniform Force	Local x	0.0110		0.0000	1.0000
106	Uniform Force	Local x	0.0110		0.0000	1.0000
107	Uniform Force	Local x	0.0110		0.0000	1.0000
108	Uniform Force	Local x	0.0110		0.0000	1.0000
109	Uniform Force	Local x	0.0110		0.0000	1.0000
110	Uniform Force	Local x	0.0110		0.0000	1.0000
111	Uniform Force	Local x	0.0110		0.0000	1.0000
112	Uniform Force	Local x	0.0110		0.0000	1.0000
113	Uniform Force	Local x	0.0110		0.0000	1.0000
114	Uniform Force	Local x	0.0110		0.0000	1.0000

LOAD CASE WS 30 deg 70mph, Member Loads

Member	Type	Direction	Magnitude at Start (kips or kips-ft)	Magnitude at End (kips or kips-ft)	Start Position (x/L)	End Position from start (x/L)
115	Uniform Force	Local x	0.0110		0.0000	1.0000
116	Uniform Force	Local x	0.0110		0.0000	1.0000
117	Uniform Force	Local x	0.0110		0.0000	1.0000
118	Uniform Force	Local x	0.0110		0.0000	1.0000
119	Uniform Force	Local x	0.0110		0.0000	1.0000
120	Uniform Force	Local x	0.0110		0.0000	1.0000
121	Uniform Force	Local x	0.0110		0.0000	1.0000
122	Uniform Force	Local x	0.0110		0.0000	1.0000
123	Uniform Force	Local x	0.0110		0.0000	1.0000
124	Uniform Force	Local x	0.0110		0.0000	1.0000
125	Uniform Force	Local x	0.0110		0.0000	1.0000
126	Uniform Force	Local x	0.0110		0.0000	1.0000
127	Uniform Force	Local x	0.0110		0.0000	1.0000
128	Uniform Force	Local x	0.0110		0.0000	1.0000
129	Uniform Force	Local x	0.0110		0.0000	1.0000
130	Uniform Force	Local x	0.0110		0.0000	1.0000
131	Uniform Force	Local x	0.0110		0.0000	1.0000
132	Uniform Force	Local x	0.0110		0.0000	1.0000
133	Uniform Force	Local x	0.0110		0.0000	1.0000
134	Uniform Force	Local x	0.0110		0.0000	1.0000
135	Uniform Force	Local x	0.0110		0.0000	1.0000
136	Uniform Force	Local x	0.0110		0.0000	1.0000
137	Uniform Force	Local x	0.0110		0.0000	1.0000
138	Uniform Force	Local x	0.0110		0.0000	1.0000
139	Uniform Force	Local x	0.0110		0.0000	1.0000
140	Uniform Force	Local x	0.0110		0.0000	1.0000
141	Uniform Force	Local x	0.0110		0.0000	1.0000
142	Uniform Force	Local x	0.0110		0.0000	1.0000
143	Uniform Force	Local x	0.0110		0.0000	1.0000
144	Uniform Force	Local x	0.0110		0.0000	1.0000
145	Uniform Force	Local x	0.0110		0.0000	1.0000
146	Uniform Force	Local x	0.0110		0.0000	1.0000
147	Uniform Force	Local x	0.0110		0.0000	1.0000
148	Uniform Force	Local x	0.0110		0.0000	1.0000

LOAD CASE WS 30 deg 70mph, Member Loads

Member	Type	Direction	Magnitude at Start (kips or kips-ft)	Magnitude at End (kips or kips-ft)	Start Position (x/L)	End Position from start (x/L)
149	Uniform Force	Local x	0.0110		0.0000	1.0000
150	Uniform Force	Local x	0.0110		0.0000	1.0000
151	Uniform Force	Local x	0.0110		0.0000	1.0000
152	Uniform Force	Local x	0.0110		0.0000	1.0000
153	Uniform Force	Local x	0.0110		0.0000	1.0000
154	Uniform Force	Local x	0.0110		0.0000	1.0000
155	Uniform Force	Local x	0.0110		0.0000	1.0000
156	Uniform Force	Local x	0.0110		0.0000	1.0000
157	Uniform Force	Local x	0.0110		0.0000	1.0000
158	Uniform Force	Local x	0.0110		0.0000	1.0000
159	Uniform Force	Local x	0.0110		0.0000	1.0000
160	Uniform Force	Local x	0.0110		0.0000	1.0000
701	Uniform Force	Global X	0.0100		0.0000	1.0000
702	Uniform Force	Global X	0.0100		0.0000	1.0000
703	Uniform Force	Global X	0.0100		0.0000	1.0000
704	Uniform Force	Global X	0.0100		0.0000	1.0000
705	Uniform Force	Global X	0.0100		0.0000	1.0000
706	Uniform Force	Global X	0.0100		0.0000	1.0000
707	Uniform Force	Global X	0.0100		0.0000	1.0000
708	Uniform Force	Global X	0.0100		0.0000	1.0000
709	Uniform Force	Global X	0.0100		0.0000	1.0000
710	Uniform Force	Global X	0.0100		0.0000	1.0000
711	Uniform Force	Global X	0.0100		0.0000	1.0000
712	Uniform Force	Global X	0.0100		0.0000	1.0000
713	Uniform Force	Global X	0.0100		0.0000	1.0000
714	Uniform Force	Global X	0.0100		0.0000	1.0000
715	Uniform Force	Global X	0.0100		0.0000	1.0000
716	Uniform Force	Global X	0.0100		0.0000	1.0000
717	Uniform Force	Global X	0.0100		0.0000	1.0000
718	Uniform Force	Global X	0.0100		0.0000	1.0000
719	Uniform Force	Global X	0.0100		0.0000	1.0000
720	Uniform Force	Global X	0.0100		0.0000	1.0000
721	Uniform Force	Global X	0.0100		0.0000	1.0000
722	Uniform Force	Global X	0.0100		0.0000	1.0000

LOAD CASE WS 30 deg 70mph, Member Loads

Member	Type	Direction	Magnitude at Start (kips or kips-ft)	Magnitude at End (kips or kips-ft)	Start Position (x/L)	End Position from start (x/L)
723	Uniform Force	Global X	0.0100		0.0000	1.0000
724	Uniform Force	Global X	0.0100		0.0000	1.0000
725	Uniform Force	Global X	0.0100		0.0000	1.0000
726	Uniform Force	Global X	0.0100		0.0000	1.0000
727	Uniform Force	Global X	0.0100		0.0000	1.0000
728	Uniform Force	Global X	0.0100		0.0000	1.0000
729	Uniform Force	Global X	0.0100		0.0000	1.0000
730	Uniform Force	Global X	0.0100		0.0000	1.0000
731	Uniform Force	Global X	0.0100		0.0000	1.0000
732	Uniform Force	Global X	0.0100		0.0000	1.0000
733	Uniform Force	Global X	0.0100		0.0000	1.0000
740	Uniform Force	Global X	0.0100		0.0000	1.0000
741	Uniform Force	Global X	0.0100		0.0000	1.0000
742	Uniform Force	Global X	0.0100		0.0000	1.0000
743	Uniform Force	Global X	0.0100		0.0000	1.0000
744	Uniform Force	Global X	0.0100		0.0000	1.0000
745	Uniform Force	Global X	0.0100		0.0000	1.0000
746	Uniform Force	Global X	0.0100		0.0000	1.0000
747	Uniform Force	Global X	0.0100		0.0000	1.0000
748	Uniform Force	Global X	0.0100		0.0000	1.0000
749	Uniform Force	Global X	0.0100		0.0000	1.0000
750	Uniform Force	Global X	0.0100		0.0000	1.0000
751	Uniform Force	Global X	0.0100		0.0000	1.0000
752	Uniform Force	Global X	0.0100		0.0000	1.0000
753	Uniform Force	Global X	0.0100		0.0000	1.0000
754	Uniform Force	Global X	0.0100		0.0000	1.0000
755	Uniform Force	Global X	0.0100		0.0000	1.0000
756	Uniform Force	Global X	0.0100		0.0000	1.0000
757	Uniform Force	Global X	0.0100		0.0000	1.0000
758	Uniform Force	Global X	0.0100		0.0000	1.0000
759	Uniform Force	Global X	0.0100		0.0000	1.0000
760	Uniform Force	Global X	0.0100		0.0000	1.0000
761	Uniform Force	Global X	0.0100		0.0000	1.0000
762	Uniform Force	Global X	0.0100		0.0000	1.0000

LOAD CASE WS 30 deg 70mph, Member Loads

Member	Type	Direction	Magnitude at Start (kips or kips-ft)	Magnitude at End (kips or kips-ft)	Start Position (x/L)	End Position from start (x/L)
763	Uniform Force	Global X	0.0100		0.0000	1.0000
764	Uniform Force	Global X	0.0100		0.0000	1.0000
765	Uniform Force	Global X	0.0100		0.0000	1.0000
766	Uniform Force	Global X	0.0100		0.0000	1.0000
767	Uniform Force	Global X	0.0100		0.0000	1.0000
768	Uniform Force	Global X	0.0100		0.0000	1.0000
769	Uniform Force	Global X	0.0100		0.0000	1.0000
770	Uniform Force	Global X	0.0100		0.0000	1.0000
771	Uniform Force	Global X	0.0100		0.0000	1.0000
772	Uniform Force	Global X	0.0100		0.0000	1.0000
2002	Uniform Force	Global Y	0.0780		0.0000	1.0000
2003	Uniform Force	Global Y	0.0780		0.0000	1.0000
2002	Trapezoidal Force	Global X	0.1300	0.1000	0.0000	1.0000
2003	Trapezoidal Force	Global X	0.1000	0.0725	0.0000	1.0000
1017	Uniform Force	Global Y	0.0650		0.0000	1.0000
1018	Uniform Force	Global Y	0.0650		0.0000	1.0000
1019	Uniform Force	Global Y	0.0650		0.0000	1.0000
1017	Uniform Force	Global X	0.0145		0.0000	1.0000
1018	Uniform Force	Global X	0.0145		0.0000	1.0000
1019	Uniform Force	Global X	0.0145		0.0000	1.0000
1013	Uniform Force	Global Y	0.0650		0.0000	1.0000
1014	Uniform Force	Global Y	0.0650		0.0000	1.0000
1015	Uniform Force	Global Y	0.0650		0.0000	1.0000
1013	Uniform Force	Global X	0.0145		0.0000	1.0000
1014	Uniform Force	Global X	0.0145		0.0000	1.0000
1015	Uniform Force	Global X	0.0145		0.0000	1.0000
3017	Uniform Force	Global Y	0.0650		0.0000	1.0000
3018	Uniform Force	Global Y	0.0650		0.0000	1.0000
3019	Uniform Force	Global Y	0.0650		0.0000	1.0000
3017	Uniform Force	Global X	0.0145		0.0000	1.0000
3018	Uniform Force	Global X	0.0145		0.0000	1.0000
3019	Uniform Force	Global X	0.0145		0.0000	1.0000
3013	Uniform Force	Global Y	0.0650		0.0000	1.0000
3014	Uniform Force	Global Y	0.0650		0.0000	1.0000

LOAD CASE WS 30 deg 70mph, Member Loads

Member	Type	Direction	Magnitude at Start (kips or kips-ft)	Magnitude at End (kips or kips-ft)	Start Position (x/L)	End Position from start (x/L)
3015	Uniform Force	Global Y	0.0650		0.0000	1.0000
3013	Uniform Force	Global X	0.0145		0.0000	1.0000
3014	Uniform Force	Global X	0.0145		0.0000	1.0000
3015	Uniform Force	Global X	0.0145		0.0000	1.0000
1006	Uniform Force	Global X	0.0360		0.0000	1.0000
1007	Uniform Force	Global X	0.0360		0.0000	1.0000
1008	Uniform Force	Global X	0.0360		0.0000	1.0000
1009	Uniform Force	Global X	0.0360		0.0000	1.0000
1010	Uniform Force	Global X	0.0360		0.0000	1.0000
1011	Uniform Force	Global X	0.0360		0.0000	1.0000
1012	Uniform Force	Global X	0.0360		0.0000	1.0000
3006	Uniform Force	Global X	0.0360		0.0000	1.0000
3007	Uniform Force	Global X	0.0360		0.0000	1.0000
3008	Uniform Force	Global X	0.0360		0.0000	1.0000
3009	Uniform Force	Global X	0.0360		0.0000	1.0000
3010	Uniform Force	Global X	0.0360		0.0000	1.0000
3011	Uniform Force	Global X	0.0360		0.0000	1.0000
3012	Uniform Force	Global X	0.0360		0.0000	1.0000
501	Uniform Force	Global Y	0.0180		0.0000	1.0000
502	Uniform Force	Global Y	0.0180		0.0000	1.0000
503	Uniform Force	Global Y	0.0180		0.0000	1.0000
504	Uniform Force	Global Y	0.0180		0.0000	1.0000
505	Uniform Force	Global Y	0.0180		0.0000	1.0000
601	Uniform Force	Global Y	0.0180		0.0000	1.0000
602	Uniform Force	Global Y	0.0180		0.0000	1.0000
603	Uniform Force	Global Y	0.0180		0.0000	1.0000
604	Uniform Force	Global Y	0.0180		0.0000	1.0000
605	Uniform Force	Global Y	0.0180		0.0000	1.0000
401	Uniform Force	Global Y	0.0780		0.0000	1.0000
402	Uniform Force	Global Y	0.0780		0.0000	1.0000
403	Uniform Force	Global Y	0.0780		0.0000	1.0000
405	Trapezoidal Force	Global Y	0.1000	0.0900	0.0000	1.0000
406	Trapezoidal Force	Global Y	0.0900	0.0900	0.0000	1.0000
407	Trapezoidal Force	Global Y	0.0900	0.0800	0.0000	1.0000

LOAD CASE WS_30 deg_70mph, Member Loads

Member	Type	Direction	Magnitude at Start (kips or kips-ft)	Magnitude at End (kips or kips-ft)	Start Position (x/L)	End Position from start (x/L)
408	Trapezoidal Force	Global Y	0.0800	0.0800	0.0000	1.0000
409	Trapezoidal Force	Global Y	0.0800	0.0700	0.0000	1.0000
410	Trapezoidal Force	Global Y	0.0700	0.0700	0.0000	1.0000
411	Trapezoidal Force	Global Y	0.0700	0.0700	0.0000	1.0000
412	Trapezoidal Force	Global Y	0.0700	0.0600	0.0000	1.0000
413	Trapezoidal Force	Global Y	0.0600	0.0600	0.0000	1.0000
501	Uniform Force	Global X	0.0110		0.0000	1.0000
502	Uniform Force	Global X	0.0110		0.0000	1.0000
503	Uniform Force	Global X	0.0110		0.0000	1.0000
504	Uniform Force	Global X	0.0110		0.0000	1.0000
505	Uniform Force	Global X	0.0110		0.0000	1.0000
601	Uniform Force	Global X	0.0110		0.0000	1.0000
602	Uniform Force	Global X	0.0110		0.0000	1.0000
603	Uniform Force	Global X	0.0110		0.0000	1.0000
604	Uniform Force	Global X	0.0110		0.0000	1.0000
605	Uniform Force	Global X	0.0110		0.0000	1.0000
401	Uniform Force	Global X	0.0360		0.0000	1.0000
402	Uniform Force	Global X	0.0360		0.0000	1.0000
403	Uniform Force	Global X	0.0360		0.0000	1.0000
405	Trapezoidal Force	Global X	0.0500	0.0500	0.0000	1.0000
406	Trapezoidal Force	Global X	0.0500	0.0500	0.0000	1.0000
407	Trapezoidal Force	Global X	0.0500	0.0500	0.0000	1.0000
408	Trapezoidal Force	Global X	0.0500	0.0400	0.0000	1.0000
409	Trapezoidal Force	Global X	0.0400	0.0400	0.0000	1.0000
410	Trapezoidal Force	Global X	0.0400	0.0400	0.0000	1.0000
411	Trapezoidal Force	Global X	0.0400	0.0400	0.0000	1.0000
412	Trapezoidal Force	Global X	0.0400	0.0400	0.0000	1.0000
413	Trapezoidal Force	Global X	0.0400	0.0300	0.0000	1.0000

LOAD CASE WS_15 deg_70mph, Member Loads

Member	Type	Direction	Magnitude at Start (kips or kips-ft)	Magnitude at End (kips or kips-ft)	Start Position (x/L)	End Position from start (x/L)
1	Uniform Force	Global Y	0.2550		0.0000	1.0000

LOAD CASE WS 15 deg 70mph, Member Loads

Member	Type	Direction	Magnitude at Start (kips or kips-ft)	Magnitude at End (kips or kips-ft)	Start Position (x/L)	End Position from start (x/L)
2	Uniform Force	Global Y	0.2550		0.0000	1.0000
3	Uniform Force	Global Y	0.2550		0.0000	1.0000
4	Uniform Force	Global Y	0.2550		0.0000	1.0000
5	Uniform Force	Global Y	0.2550		0.0000	1.0000
6	Uniform Force	Global Y	0.2550		0.0000	1.0000
7	Uniform Force	Global Y	0.2550		0.0000	1.0000
8	Uniform Force	Global Y	0.2550		0.0000	1.0000
9	Uniform Force	Global Y	0.2550		0.0000	1.0000
10	Uniform Force	Global Y	0.2550		0.0000	1.0000
11	Uniform Force	Global Y	0.2550		0.0000	1.0000
12	Uniform Force	Global Y	0.2550		0.0000	1.0000
13	Uniform Force	Global Y	0.2550		0.0000	1.0000
14	Uniform Force	Global Y	0.2550		0.0000	1.0000
15	Uniform Force	Global Y	0.2550		0.0000	1.0000
16	Uniform Force	Global Y	0.2550		0.0000	1.0000
17	Uniform Force	Global Y	0.2550		0.0000	1.0000
18	Uniform Force	Global Y	0.2550		0.0000	1.0000
19	Uniform Force	Global Y	0.2550		0.0000	1.0000
20	Uniform Force	Global Y	0.2550		0.0000	1.0000
21	Uniform Force	Global Y	0.2550		0.0000	1.0000
22	Uniform Force	Global Y	0.2550		0.0000	1.0000
23	Uniform Force	Global Y	0.2550		0.0000	1.0000
24	Uniform Force	Global Y	0.2550		0.0000	1.0000
25	Uniform Force	Global Y	0.2550		0.0000	1.0000
26	Uniform Force	Global Y	0.2550		0.0000	1.0000
27	Uniform Force	Global Y	0.2550		0.0000	1.0000
28	Uniform Force	Global Y	0.2550		0.0000	1.0000
29	Uniform Force	Global Y	0.2550		0.0000	1.0000
30	Uniform Force	Global Y	0.2550		0.0000	1.0000
31	Uniform Force	Global Y	0.2550		0.0000	1.0000
32	Uniform Force	Global Y	0.2550		0.0000	1.0000
33	Uniform Force	Global Y	0.2550		0.0000	1.0000
34	Uniform Force	Global Y	0.2550		0.0000	1.0000
35	Uniform Force	Global Y	0.2550		0.0000	1.0000

LOAD CASE WS 15 deg 70mph, Member Loads

Member	Type	Direction	Magnitude at Start (kips or kips-ft)	Magnitude at End (kips or kips-ft)	Start Position (x/L)	End Position from start (x/L)
36	Uniform Force	Global Y	0.2550		0.0000	1.0000
37	Uniform Force	Global Y	0.2550		0.0000	1.0000
38	Uniform Force	Global Y	0.2550		0.0000	1.0000
39	Uniform Force	Global Y	0.2550		0.0000	1.0000
40	Uniform Force	Global Y	0.2550		0.0000	1.0000
41	Uniform Force	Global Y	0.2550		0.0000	1.0000
42	Uniform Force	Global Y	0.2550		0.0000	1.0000
43	Uniform Force	Global Y	0.2550		0.0000	1.0000
44	Uniform Force	Global Y	0.2550		0.0000	1.0000
45	Uniform Force	Global Y	0.2550		0.0000	1.0000
46	Uniform Force	Global Y	0.2550		0.0000	1.0000
47	Uniform Force	Global Y	0.2550		0.0000	1.0000
48	Uniform Force	Global Y	0.2550		0.0000	1.0000
49	Uniform Force	Global Y	0.2550		0.0000	1.0000
50	Uniform Force	Global Y	0.2550		0.0000	1.0000
51	Uniform Force	Global Y	0.2550		0.0000	1.0000
52	Uniform Force	Global Y	0.2550		0.0000	1.0000
53	Uniform Force	Global Y	0.2550		0.0000	1.0000
54	Uniform Force	Global Y	0.2550		0.0000	1.0000
55	Uniform Force	Global Y	0.2550		0.0000	1.0000
56	Uniform Force	Global Y	0.2550		0.0000	1.0000
57	Uniform Force	Global Y	0.2550		0.0000	1.0000
101	Uniform Force	Global Y	0.0270		0.0000	1.0000
102	Uniform Force	Global Y	0.0270		0.0000	1.0000
103	Uniform Force	Global Y	0.0270		0.0000	1.0000
104	Uniform Force	Global Y	0.0270		0.0000	1.0000
105	Uniform Force	Global Y	0.0270		0.0000	1.0000
106	Uniform Force	Global Y	0.0270		0.0000	1.0000
107	Uniform Force	Global Y	0.0270		0.0000	1.0000
108	Uniform Force	Global Y	0.0270		0.0000	1.0000
109	Uniform Force	Global Y	0.0270		0.0000	1.0000
110	Uniform Force	Global Y	0.0270		0.0000	1.0000
111	Uniform Force	Global Y	0.0270		0.0000	1.0000
112	Uniform Force	Global Y	0.0270		0.0000	1.0000

LOAD CASE WS 15 deg 70mph, Member Loads

Member	Type	Direction	Magnitude at Start (kips or kips-ft)	Magnitude at End (kips or kips-ft)	Start Position (x/L)	End Position from start (x/L)
113	Uniform Force	Global Y	0.0270		0.0000	1.0000
114	Uniform Force	Global Y	0.0270		0.0000	1.0000
115	Uniform Force	Global Y	0.0270		0.0000	1.0000
116	Uniform Force	Global Y	0.0270		0.0000	1.0000
117	Uniform Force	Global Y	0.0270		0.0000	1.0000
118	Uniform Force	Global Y	0.0270		0.0000	1.0000
119	Uniform Force	Global Y	0.0270		0.0000	1.0000
120	Uniform Force	Global Y	0.0270		0.0000	1.0000
121	Uniform Force	Global Y	0.0270		0.0000	1.0000
122	Uniform Force	Global Y	0.0270		0.0000	1.0000
123	Uniform Force	Global Y	0.0270		0.0000	1.0000
124	Uniform Force	Global Y	0.0270		0.0000	1.0000
125	Uniform Force	Global Y	0.0270		0.0000	1.0000
126	Uniform Force	Global Y	0.0270		0.0000	1.0000
127	Uniform Force	Global Y	0.0270		0.0000	1.0000
128	Uniform Force	Global Y	0.0270		0.0000	1.0000
129	Uniform Force	Global Y	0.0270		0.0000	1.0000
130	Uniform Force	Global Y	0.0270		0.0000	1.0000
131	Uniform Force	Global Y	0.0270		0.0000	1.0000
132	Uniform Force	Global Y	0.0270		0.0000	1.0000
133	Uniform Force	Global Y	0.0270		0.0000	1.0000
134	Uniform Force	Global Y	0.0270		0.0000	1.0000
135	Uniform Force	Global Y	0.0270		0.0000	1.0000
136	Uniform Force	Global Y	0.0270		0.0000	1.0000
137	Uniform Force	Global Y	0.0270		0.0000	1.0000
138	Uniform Force	Global Y	0.0270		0.0000	1.0000
139	Uniform Force	Global Y	0.0270		0.0000	1.0000
140	Uniform Force	Global Y	0.0270		0.0000	1.0000
141	Uniform Force	Global Y	0.0270		0.0000	1.0000
142	Uniform Force	Global Y	0.0270		0.0000	1.0000
143	Uniform Force	Global Y	0.0270		0.0000	1.0000
144	Uniform Force	Global Y	0.0270		0.0000	1.0000
145	Uniform Force	Global Y	0.0270		0.0000	1.0000
146	Uniform Force	Global Y	0.0270		0.0000	1.0000

LOAD CASE WS 15 deg 70mph, Member Loads

Member	Type	Direction	Magnitude at Start (kips or kips-ft)	Magnitude at End (kips or kips-ft)	Start Position (x/L)	End Position from start (x/L)
147	Uniform Force	Global Y	0.0270		0.0000	1.0000
148	Uniform Force	Global Y	0.0270		0.0000	1.0000
149	Uniform Force	Global Y	0.0270		0.0000	1.0000
150	Uniform Force	Global Y	0.0270		0.0000	1.0000
151	Uniform Force	Global Y	0.0270		0.0000	1.0000
152	Uniform Force	Global Y	0.0270		0.0000	1.0000
153	Uniform Force	Global Y	0.0270		0.0000	1.0000
154	Uniform Force	Global Y	0.0270		0.0000	1.0000
155	Uniform Force	Global Y	0.0270		0.0000	1.0000
156	Uniform Force	Global Y	0.0270		0.0000	1.0000
157	Uniform Force	Global Y	0.0270		0.0000	1.0000
158	Uniform Force	Global Y	0.0270		0.0000	1.0000
159	Uniform Force	Global Y	0.0270		0.0000	1.0000
160	Uniform Force	Global Y	0.0270		0.0000	1.0000
701	Uniform Force	Global Y	0.0250		0.0000	1.0000
702	Uniform Force	Global Y	0.0250		0.0000	1.0000
703	Uniform Force	Global Y	0.0250		0.0000	1.0000
704	Uniform Force	Global Y	0.0250		0.0000	1.0000
705	Uniform Force	Global Y	0.0250		0.0000	1.0000
706	Uniform Force	Global Y	0.0250		0.0000	1.0000
707	Uniform Force	Global Y	0.0250		0.0000	1.0000
708	Uniform Force	Global Y	0.0250		0.0000	1.0000
709	Uniform Force	Global Y	0.0250		0.0000	1.0000
710	Uniform Force	Global Y	0.0250		0.0000	1.0000
711	Uniform Force	Global Y	0.0250		0.0000	1.0000
712	Uniform Force	Global Y	0.0250		0.0000	1.0000
713	Uniform Force	Global Y	0.0250		0.0000	1.0000
714	Uniform Force	Global Y	0.0250		0.0000	1.0000
715	Uniform Force	Global Y	0.0250		0.0000	1.0000
716	Uniform Force	Global Y	0.0250		0.0000	1.0000
717	Uniform Force	Global Y	0.0250		0.0000	1.0000
718	Uniform Force	Global Y	0.0250		0.0000	1.0000
719	Uniform Force	Global Y	0.0250		0.0000	1.0000
720	Uniform Force	Global Y	0.0250		0.0000	1.0000

LOAD CASE WS 15 deg 70mph, Member Loads

Member	Type	Direction	Magnitude at Start (kips or kips-ft)	Magnitude at End (kips or kips-ft)	Start Position (x/L)	End Position from start (x/L)
721	Uniform Force	Global Y	0.0250		0.0000	1.0000
722	Uniform Force	Global Y	0.0250		0.0000	1.0000
723	Uniform Force	Global Y	0.0250		0.0000	1.0000
724	Uniform Force	Global Y	0.0250		0.0000	1.0000
725	Uniform Force	Global Y	0.0250		0.0000	1.0000
726	Uniform Force	Global Y	0.0250		0.0000	1.0000
727	Uniform Force	Global Y	0.0250		0.0000	1.0000
728	Uniform Force	Global Y	0.0250		0.0000	1.0000
729	Uniform Force	Global Y	0.0250		0.0000	1.0000
730	Uniform Force	Global Y	0.0250		0.0000	1.0000
731	Uniform Force	Global Y	0.0250		0.0000	1.0000
732	Uniform Force	Global Y	0.0250		0.0000	1.0000
733	Uniform Force	Global Y	0.0250		0.0000	1.0000
740	Uniform Force	Global Y	0.0250		0.0000	1.0000
741	Uniform Force	Global Y	0.0250		0.0000	1.0000
742	Uniform Force	Global Y	0.0250		0.0000	1.0000
743	Uniform Force	Global Y	0.0250		0.0000	1.0000
744	Uniform Force	Global Y	0.0250		0.0000	1.0000
745	Uniform Force	Global Y	0.0250		0.0000	1.0000
746	Uniform Force	Global Y	0.0250		0.0000	1.0000
747	Uniform Force	Global Y	0.0250		0.0000	1.0000
748	Uniform Force	Global Y	0.0250		0.0000	1.0000
749	Uniform Force	Global Y	0.0250		0.0000	1.0000
750	Uniform Force	Global Y	0.0250		0.0000	1.0000
751	Uniform Force	Global Y	0.0250		0.0000	1.0000
752	Uniform Force	Global Y	0.0250		0.0000	1.0000
753	Uniform Force	Global Y	0.0250		0.0000	1.0000
754	Uniform Force	Global Y	0.0250		0.0000	1.0000
755	Uniform Force	Global Y	0.0250		0.0000	1.0000
756	Uniform Force	Global Y	0.0250		0.0000	1.0000
757	Uniform Force	Global Y	0.0250		0.0000	1.0000
758	Uniform Force	Global Y	0.0250		0.0000	1.0000
759	Uniform Force	Global Y	0.0250		0.0000	1.0000
760	Uniform Force	Global Y	0.0250		0.0000	1.0000

LOAD CASE WS 15 deg 70mph, Member Loads

Member	Type	Direction	Magnitude at Start (kips or kips-ft)	Magnitude at End (kips or kips-ft)	Start Position (x/L)	End Position from start (x/L)
761	Uniform Force	Global Y	0.0250		0.0000	1.0000
762	Uniform Force	Global Y	0.0250		0.0000	1.0000
763	Uniform Force	Global Y	0.0250		0.0000	1.0000
764	Uniform Force	Global Y	0.0250		0.0000	1.0000
765	Uniform Force	Global Y	0.0250		0.0000	1.0000
766	Uniform Force	Global Y	0.0250		0.0000	1.0000
767	Uniform Force	Global Y	0.0250		0.0000	1.0000
768	Uniform Force	Global Y	0.0250		0.0000	1.0000
769	Uniform Force	Global Y	0.0250		0.0000	1.0000
770	Uniform Force	Global Y	0.0250		0.0000	1.0000
771	Uniform Force	Global Y	0.0250		0.0000	1.0000
772	Uniform Force	Global Y	0.0250		0.0000	1.0000
1	Uniform Moment	Local x	-0.9000		0.0000	1.0000
2	Uniform Moment	Local x	-0.9000		0.0000	1.0000
3	Uniform Moment	Local x	-0.9000		0.0000	1.0000
4	Uniform Moment	Local x	-0.9000		0.0000	1.0000
5	Uniform Moment	Local x	-0.9000		0.0000	1.0000
6	Uniform Moment	Local x	-0.9000		0.0000	1.0000
7	Uniform Moment	Local x	-0.9000		0.0000	1.0000
8	Uniform Moment	Local x	-0.9000		0.0000	1.0000
9	Uniform Moment	Local x	-0.9000		0.0000	1.0000
10	Uniform Moment	Local x	-0.9000		0.0000	1.0000
11	Uniform Moment	Local x	-0.9000		0.0000	1.0000
12	Uniform Moment	Local x	-0.9000		0.0000	1.0000
13	Uniform Moment	Local x	-0.9000		0.0000	1.0000
14	Uniform Moment	Local x	-0.9000		0.0000	1.0000
15	Uniform Moment	Local x	-0.9000		0.0000	1.0000
16	Uniform Moment	Local x	-0.9000		0.0000	1.0000
17	Uniform Moment	Local x	-0.9000		0.0000	1.0000
18	Uniform Moment	Local x	-0.9000		0.0000	1.0000
19	Uniform Moment	Local x	-0.9000		0.0000	1.0000
20	Uniform Moment	Local x	-0.9000		0.0000	1.0000
21	Uniform Moment	Local x	-0.9000		0.0000	1.0000
22	Uniform Moment	Local x	-0.9000		0.0000	1.0000

LOAD CASE WS 15 deg 70mph, Member Loads

Member	Type	Direction	Magnitude at Start (kips or kips-ft)	Magnitude at End (kips or kips-ft)	Start Position (x/L)	End Position from start (x/L)
23	Uniform Moment	Local x	-0.9000		0.0000	1.0000
24	Uniform Moment	Local x	-0.9000		0.0000	1.0000
25	Uniform Moment	Local x	-0.9000		0.0000	1.0000
26	Uniform Moment	Local x	-0.9000		0.0000	1.0000
27	Uniform Moment	Local x	-0.9000		0.0000	1.0000
28	Uniform Moment	Local x	-0.9000		0.0000	1.0000
29	Uniform Moment	Local x	-0.9000		0.0000	1.0000
30	Uniform Moment	Local x	-0.9000		0.0000	1.0000
31	Uniform Moment	Local x	-0.9000		0.0000	1.0000
32	Uniform Moment	Local x	-0.9000		0.0000	1.0000
33	Uniform Moment	Local x	-0.9000		0.0000	1.0000
34	Uniform Moment	Local x	-0.9000		0.0000	1.0000
35	Uniform Moment	Local x	-0.9000		0.0000	1.0000
36	Uniform Moment	Local x	-0.9000		0.0000	1.0000
37	Uniform Moment	Local x	-0.9000		0.0000	1.0000
38	Uniform Moment	Local x	-0.9000		0.0000	1.0000
39	Uniform Moment	Local x	-0.9000		0.0000	1.0000
40	Uniform Moment	Local x	-0.9000		0.0000	1.0000
41	Uniform Moment	Local x	-0.9000		0.0000	1.0000
42	Uniform Moment	Local x	-0.9000		0.0000	1.0000
43	Uniform Moment	Local x	-0.9000		0.0000	1.0000
44	Uniform Moment	Local x	-0.9000		0.0000	1.0000
45	Uniform Moment	Local x	-0.9000		0.0000	1.0000
46	Uniform Moment	Local x	-0.9000		0.0000	1.0000
47	Uniform Moment	Local x	-0.9000		0.0000	1.0000
48	Uniform Moment	Local x	-0.9000		0.0000	1.0000
49	Uniform Moment	Local x	-0.9000		0.0000	1.0000
50	Uniform Moment	Local x	-0.9000		0.0000	1.0000
51	Uniform Moment	Local x	-0.9000		0.0000	1.0000
52	Uniform Moment	Local x	-0.9000		0.0000	1.0000
53	Uniform Moment	Local x	-0.9000		0.0000	1.0000
54	Uniform Moment	Local x	-0.9000		0.0000	1.0000
55	Uniform Moment	Local x	-0.9000		0.0000	1.0000
56	Uniform Moment	Local x	-0.9000		0.0000	1.0000

LOAD CASE WS 15 deg 70mph, Member Loads

Member	Type	Direction	Magnitude at Start (kips or kips-ft)	Magnitude at End (kips or kips-ft)	Start Position (x/L)	End Position from start (x/L)
57	Uniform Moment	Local x	-0.9000		0.0000	1.0000
1	Uniform Force	Local x	0.0430		0.0000	1.0000
2	Uniform Force	Local x	0.0430		0.0000	1.0000
3	Uniform Force	Local x	0.0430		0.0000	1.0000
4	Uniform Force	Local x	0.0430		0.0000	1.0000
5	Uniform Force	Local x	0.0430		0.0000	1.0000
6	Uniform Force	Local x	0.0430		0.0000	1.0000
7	Uniform Force	Local x	0.0430		0.0000	1.0000
8	Uniform Force	Local x	0.0430		0.0000	1.0000
9	Uniform Force	Local x	0.0430		0.0000	1.0000
10	Uniform Force	Local x	0.0430		0.0000	1.0000
11	Uniform Force	Local x	0.0430		0.0000	1.0000
12	Uniform Force	Local x	0.0430		0.0000	1.0000
13	Uniform Force	Local x	0.0430		0.0000	1.0000
14	Uniform Force	Local x	0.0430		0.0000	1.0000
15	Uniform Force	Local x	0.0430		0.0000	1.0000
16	Uniform Force	Local x	0.0430		0.0000	1.0000
17	Uniform Force	Local x	0.0430		0.0000	1.0000
18	Uniform Force	Local x	0.0430		0.0000	1.0000
19	Uniform Force	Local x	0.0430		0.0000	1.0000
20	Uniform Force	Local x	0.0430		0.0000	1.0000
21	Uniform Force	Local x	0.0430		0.0000	1.0000
22	Uniform Force	Local x	0.0430		0.0000	1.0000
23	Uniform Force	Local x	0.0430		0.0000	1.0000
24	Uniform Force	Local x	0.0430		0.0000	1.0000
25	Uniform Force	Local x	0.0430		0.0000	1.0000
26	Uniform Force	Local x	0.0430		0.0000	1.0000
27	Uniform Force	Local x	0.0430		0.0000	1.0000
28	Uniform Force	Local x	0.0430		0.0000	1.0000
29	Uniform Force	Local x	0.0430		0.0000	1.0000
30	Uniform Force	Local x	0.0430		0.0000	1.0000
31	Uniform Force	Local x	0.0430		0.0000	1.0000
32	Uniform Force	Local x	0.0430		0.0000	1.0000
33	Uniform Force	Local x	0.0430		0.0000	1.0000

LOAD CASE WS 15 deg 70mph, Member Loads

Member	Type	Direction	Magnitude at Start (kips or kips-ft)	Magnitude at End (kips or kips-ft)	Start Position (x/L)	End Position from start (x/L)
34	Uniform Force	Local x	0.0430		0.0000	1.0000
35	Uniform Force	Local x	0.0430		0.0000	1.0000
36	Uniform Force	Local x	0.0430		0.0000	1.0000
37	Uniform Force	Local x	0.0430		0.0000	1.0000
38	Uniform Force	Local x	0.0430		0.0000	1.0000
39	Uniform Force	Local x	0.0430		0.0000	1.0000
40	Uniform Force	Local x	0.0430		0.0000	1.0000
41	Uniform Force	Local x	0.0430		0.0000	1.0000
42	Uniform Force	Local x	0.0430		0.0000	1.0000
43	Uniform Force	Local x	0.0430		0.0000	1.0000
44	Uniform Force	Local x	0.0430		0.0000	1.0000
45	Uniform Force	Local x	0.0430		0.0000	1.0000
46	Uniform Force	Local x	0.0430		0.0000	1.0000
47	Uniform Force	Local x	0.0430		0.0000	1.0000
48	Uniform Force	Local x	0.0430		0.0000	1.0000
49	Uniform Force	Local x	0.0430		0.0000	1.0000
50	Uniform Force	Local x	0.0430		0.0000	1.0000
51	Uniform Force	Local x	0.0430		0.0000	1.0000
52	Uniform Force	Local x	0.0430		0.0000	1.0000
53	Uniform Force	Local x	0.0430		0.0000	1.0000
54	Uniform Force	Local x	0.0430		0.0000	1.0000
55	Uniform Force	Local x	0.0430		0.0000	1.0000
56	Uniform Force	Local x	0.0430		0.0000	1.0000
57	Uniform Force	Local x	0.0430		0.0000	1.0000
101	Uniform Force	Local x	0.0050		0.0000	1.0000
102	Uniform Force	Local x	0.0050		0.0000	1.0000
103	Uniform Force	Local x	0.0050		0.0000	1.0000
104	Uniform Force	Local x	0.0050		0.0000	1.0000
105	Uniform Force	Local x	0.0050		0.0000	1.0000
106	Uniform Force	Local x	0.0050		0.0000	1.0000
107	Uniform Force	Local x	0.0050		0.0000	1.0000
108	Uniform Force	Local x	0.0050		0.0000	1.0000
109	Uniform Force	Local x	0.0050		0.0000	1.0000
110	Uniform Force	Local x	0.0050		0.0000	1.0000

LOAD CASE WS 15 deg 70mph, Member Loads

Member	Type	Direction	Magnitude at Start (kips or kips-ft)	Magnitude at End (kips or kips-ft)	Start Position (x/L)	End Position from start (x/L)
111	Uniform Force	Local x	0.0050		0.0000	1.0000
112	Uniform Force	Local x	0.0050		0.0000	1.0000
113	Uniform Force	Local x	0.0050		0.0000	1.0000
114	Uniform Force	Local x	0.0050		0.0000	1.0000
115	Uniform Force	Local x	0.0050		0.0000	1.0000
116	Uniform Force	Local x	0.0050		0.0000	1.0000
117	Uniform Force	Local x	0.0050		0.0000	1.0000
118	Uniform Force	Local x	0.0050		0.0000	1.0000
119	Uniform Force	Local x	0.0050		0.0000	1.0000
120	Uniform Force	Local x	0.0050		0.0000	1.0000
121	Uniform Force	Local x	0.0050		0.0000	1.0000
122	Uniform Force	Local x	0.0050		0.0000	1.0000
123	Uniform Force	Local x	0.0050		0.0000	1.0000
124	Uniform Force	Local x	0.0050		0.0000	1.0000
125	Uniform Force	Local x	0.0050		0.0000	1.0000
126	Uniform Force	Local x	0.0050		0.0000	1.0000
127	Uniform Force	Local x	0.0050		0.0000	1.0000
128	Uniform Force	Local x	0.0050		0.0000	1.0000
129	Uniform Force	Local x	0.0050		0.0000	1.0000
130	Uniform Force	Local x	0.0050		0.0000	1.0000
131	Uniform Force	Local x	0.0050		0.0000	1.0000
132	Uniform Force	Local x	0.0050		0.0000	1.0000
133	Uniform Force	Local x	0.0050		0.0000	1.0000
134	Uniform Force	Local x	0.0050		0.0000	1.0000
135	Uniform Force	Local x	0.0050		0.0000	1.0000
136	Uniform Force	Local x	0.0050		0.0000	1.0000
137	Uniform Force	Local x	0.0050		0.0000	1.0000
138	Uniform Force	Local x	0.0050		0.0000	1.0000
139	Uniform Force	Local x	0.0050		0.0000	1.0000
140	Uniform Force	Local x	0.0050		0.0000	1.0000
141	Uniform Force	Local x	0.0050		0.0000	1.0000
142	Uniform Force	Local x	0.0050		0.0000	1.0000
143	Uniform Force	Local x	0.0050		0.0000	1.0000
144	Uniform Force	Local x	0.0050		0.0000	1.0000

LOAD CASE WS 15 deg 70mph, Member Loads

Member	Type	Direction	Magnitude at Start (kips or kips-ft)	Magnitude at End (kips or kips-ft)	Start Position (x/L)	End Position from start (x/L)
145	Uniform Force	Local x	0.0050		0.0000	1.0000
146	Uniform Force	Local x	0.0050		0.0000	1.0000
147	Uniform Force	Local x	0.0050		0.0000	1.0000
148	Uniform Force	Local x	0.0050		0.0000	1.0000
149	Uniform Force	Local x	0.0050		0.0000	1.0000
150	Uniform Force	Local x	0.0050		0.0000	1.0000
151	Uniform Force	Local x	0.0050		0.0000	1.0000
152	Uniform Force	Local x	0.0050		0.0000	1.0000
153	Uniform Force	Local x	0.0050		0.0000	1.0000
154	Uniform Force	Local x	0.0050		0.0000	1.0000
155	Uniform Force	Local x	0.0050		0.0000	1.0000
156	Uniform Force	Local x	0.0050		0.0000	1.0000
157	Uniform Force	Local x	0.0050		0.0000	1.0000
158	Uniform Force	Local x	0.0050		0.0000	1.0000
159	Uniform Force	Local x	0.0050		0.0000	1.0000
160	Uniform Force	Local x	0.0050		0.0000	1.0000
701	Uniform Force	Global X	0.0040		0.0000	1.0000
702	Uniform Force	Global X	0.0040		0.0000	1.0000
703	Uniform Force	Global X	0.0040		0.0000	1.0000
704	Uniform Force	Global X	0.0040		0.0000	1.0000
705	Uniform Force	Global X	0.0040		0.0000	1.0000
706	Uniform Force	Global X	0.0040		0.0000	1.0000
707	Uniform Force	Global X	0.0040		0.0000	1.0000
708	Uniform Force	Global X	0.0040		0.0000	1.0000
709	Uniform Force	Global X	0.0040		0.0000	1.0000
710	Uniform Force	Global X	0.0040		0.0000	1.0000
711	Uniform Force	Global X	0.0040		0.0000	1.0000
712	Uniform Force	Global X	0.0040		0.0000	1.0000
713	Uniform Force	Global X	0.0040		0.0000	1.0000
714	Uniform Force	Global X	0.0040		0.0000	1.0000
715	Uniform Force	Global X	0.0040		0.0000	1.0000
716	Uniform Force	Global X	0.0040		0.0000	1.0000
717	Uniform Force	Global X	0.0040		0.0000	1.0000
718	Uniform Force	Global X	0.0040		0.0000	1.0000

LOAD CASE WS 15 deg 70mph, Member Loads

Member	Type	Direction	Magnitude at Start (kips or kips-ft)	Magnitude at End (kips or kips-ft)	Start Position (x/L)	End Position from start (x/L)
719	Uniform Force	Global X	0.0040		0.0000	1.0000
720	Uniform Force	Global X	0.0040		0.0000	1.0000
721	Uniform Force	Global X	0.0040		0.0000	1.0000
722	Uniform Force	Global X	0.0040		0.0000	1.0000
723	Uniform Force	Global X	0.0040		0.0000	1.0000
724	Uniform Force	Global X	0.0040		0.0000	1.0000
725	Uniform Force	Global X	0.0040		0.0000	1.0000
726	Uniform Force	Global X	0.0040		0.0000	1.0000
727	Uniform Force	Global X	0.0040		0.0000	1.0000
728	Uniform Force	Global X	0.0040		0.0000	1.0000
729	Uniform Force	Global X	0.0040		0.0000	1.0000
730	Uniform Force	Global X	0.0040		0.0000	1.0000
731	Uniform Force	Global X	0.0040		0.0000	1.0000
732	Uniform Force	Global X	0.0040		0.0000	1.0000
733	Uniform Force	Global X	0.0040		0.0000	1.0000
740	Uniform Force	Global X	0.0040		0.0000	1.0000
741	Uniform Force	Global X	0.0040		0.0000	1.0000
742	Uniform Force	Global X	0.0040		0.0000	1.0000
743	Uniform Force	Global X	0.0040		0.0000	1.0000
744	Uniform Force	Global X	0.0040		0.0000	1.0000
745	Uniform Force	Global X	0.0040		0.0000	1.0000
746	Uniform Force	Global X	0.0040		0.0000	1.0000
747	Uniform Force	Global X	0.0040		0.0000	1.0000
748	Uniform Force	Global X	0.0040		0.0000	1.0000
749	Uniform Force	Global X	0.0040		0.0000	1.0000
750	Uniform Force	Global X	0.0040		0.0000	1.0000
751	Uniform Force	Global X	0.0040		0.0000	1.0000
752	Uniform Force	Global X	0.0040		0.0000	1.0000
753	Uniform Force	Global X	0.0040		0.0000	1.0000
754	Uniform Force	Global X	0.0040		0.0000	1.0000
755	Uniform Force	Global X	0.0040		0.0000	1.0000
756	Uniform Force	Global X	0.0040		0.0000	1.0000
757	Uniform Force	Global X	0.0040		0.0000	1.0000
758	Uniform Force	Global X	0.0040		0.0000	1.0000

LOAD CASE WS 15 deg 70mph, Member Loads

Member	Type	Direction	Magnitude at Start (kips or kips-ft)	Magnitude at End (kips or kips-ft)	Start Position (x/L)	End Position from start (x/L)
759	Uniform Force	Global X	0.0040		0.0000	1.0000
760	Uniform Force	Global X	0.0040		0.0000	1.0000
761	Uniform Force	Global X	0.0040		0.0000	1.0000
762	Uniform Force	Global X	0.0040		0.0000	1.0000
763	Uniform Force	Global X	0.0040		0.0000	1.0000
764	Uniform Force	Global X	0.0040		0.0000	1.0000
765	Uniform Force	Global X	0.0040		0.0000	1.0000
766	Uniform Force	Global X	0.0040		0.0000	1.0000
767	Uniform Force	Global X	0.0040		0.0000	1.0000
768	Uniform Force	Global X	0.0040		0.0000	1.0000
769	Uniform Force	Global X	0.0040		0.0000	1.0000
770	Uniform Force	Global X	0.0040		0.0000	1.0000
771	Uniform Force	Global X	0.0040		0.0000	1.0000
772	Uniform Force	Global X	0.0040		0.0000	1.0000
2002	Uniform Force	Global Y	0.0840		0.0000	1.0000
2003	Uniform Force	Global Y	0.0840		0.0000	1.0000
2002	Trapezoidal Force	Global X	0.0680	0.0530	0.0000	1.0000
2003	Trapezoidal Force	Global X	0.0530	0.0375	0.0000	1.0000
1017	Uniform Force	Global Y	0.0700		0.0000	1.0000
1018	Uniform Force	Global Y	0.0700		0.0000	1.0000
1019	Uniform Force	Global Y	0.0700		0.0000	1.0000
1017	Uniform Force	Global X	0.0075		0.0000	1.0000
1018	Uniform Force	Global X	0.0075		0.0000	1.0000
1019	Uniform Force	Global X	0.0075		0.0000	1.0000
1013	Uniform Force	Global Y	0.0700		0.0000	1.0000
1014	Uniform Force	Global Y	0.0700		0.0000	1.0000
1015	Uniform Force	Global Y	0.0700		0.0000	1.0000
1013	Uniform Force	Global X	0.0075		0.0000	1.0000
1014	Uniform Force	Global X	0.0075		0.0000	1.0000
1015	Uniform Force	Global X	0.0075		0.0000	1.0000
3017	Uniform Force	Global Y	0.0700		0.0000	1.0000
3018	Uniform Force	Global Y	0.0700		0.0000	1.0000
3019	Uniform Force	Global Y	0.0700		0.0000	1.0000
3017	Uniform Force	Global X	0.0075		0.0000	1.0000

LOAD CASE WS 15 deg 70mph, Member Loads

Member	Type	Direction	Magnitude at Start (kips or kips-ft)	Magnitude at End (kips or kips-ft)	Start Position (x/L)	End Position from start (x/L)
3018	Uniform Force	Global X	0.0075		0.0000	1.0000
3019	Uniform Force	Global X	0.0075		0.0000	1.0000
3013	Uniform Force	Global Y	0.0700		0.0000	1.0000
3014	Uniform Force	Global Y	0.0700		0.0000	1.0000
3015	Uniform Force	Global Y	0.0700		0.0000	1.0000
3013	Uniform Force	Global X	0.0075		0.0000	1.0000
3014	Uniform Force	Global X	0.0075		0.0000	1.0000
3015	Uniform Force	Global X	0.0075		0.0000	1.0000
1006	Uniform Force	Global X	0.0188		0.0000	1.0000
1007	Uniform Force	Global X	0.0188		0.0000	1.0000
1008	Uniform Force	Global X	0.0188		0.0000	1.0000
1009	Uniform Force	Global X	0.0188		0.0000	1.0000
1010	Uniform Force	Global X	0.0188		0.0000	1.0000
1011	Uniform Force	Global X	0.0188		0.0000	1.0000
1012	Uniform Force	Global X	0.0188		0.0000	1.0000
3006	Uniform Force	Global X	0.0188		0.0000	1.0000
3007	Uniform Force	Global X	0.0188		0.0000	1.0000
3008	Uniform Force	Global X	0.0188		0.0000	1.0000
3009	Uniform Force	Global X	0.0188		0.0000	1.0000
3010	Uniform Force	Global X	0.0188		0.0000	1.0000
3011	Uniform Force	Global X	0.0188		0.0000	1.0000
3012	Uniform Force	Global X	0.0188		0.0000	1.0000
501	Uniform Force	Global Y	0.0200		0.0000	1.0000
502	Uniform Force	Global Y	0.0200		0.0000	1.0000
503	Uniform Force	Global Y	0.0200		0.0000	1.0000
504	Uniform Force	Global Y	0.0200		0.0000	1.0000
505	Uniform Force	Global Y	0.0200		0.0000	1.0000
601	Uniform Force	Global Y	0.0200		0.0000	1.0000
602	Uniform Force	Global Y	0.0200		0.0000	1.0000
603	Uniform Force	Global Y	0.0200		0.0000	1.0000
604	Uniform Force	Global Y	0.0200		0.0000	1.0000
605	Uniform Force	Global Y	0.0200		0.0000	1.0000
401	Uniform Force	Global Y	0.0840		0.0000	1.0000
402	Uniform Force	Global Y	0.0840		0.0000	1.0000

LOAD CASE WS 15 deg 70mph, Member Loads

Member	Type	Direction	Magnitude at Start (kips or kips-ft)	Magnitude at End (kips or kips-ft)	Start Position (x/L)	End Position from start (x/L)
403	Uniform Force	Global Y	0.0840		0.0000	1.0000
405	Trapezoidal Force	Global Y	0.1100	0.1000	0.0000	1.0000
406	Trapezoidal Force	Global Y	0.1000	0.1000	0.0000	1.0000
407	Trapezoidal Force	Global Y	0.1000	0.0900	0.0000	1.0000
408	Trapezoidal Force	Global Y	0.0900	0.0900	0.0000	1.0000
409	Trapezoidal Force	Global Y	0.0900	0.0800	0.0000	1.0000
410	Trapezoidal Force	Global Y	0.0800	0.0800	0.0000	1.0000
411	Trapezoidal Force	Global Y	0.0800	0.0700	0.0000	1.0000
412	Trapezoidal Force	Global Y	0.0700	0.0700	0.0000	1.0000
413	Trapezoidal Force	Global Y	0.0700	0.0700	0.0000	1.0000
501	Uniform Force	Global X	0.0050		0.0000	1.0000
502	Uniform Force	Global X	0.0050		0.0000	1.0000
503	Uniform Force	Global X	0.0050		0.0000	1.0000
504	Uniform Force	Global X	0.0050		0.0000	1.0000
505	Uniform Force	Global X	0.0050		0.0000	1.0000
601	Uniform Force	Global X	0.0050		0.0000	1.0000
602	Uniform Force	Global X	0.0050		0.0000	1.0000
603	Uniform Force	Global X	0.0050		0.0000	1.0000
604	Uniform Force	Global X	0.0050		0.0000	1.0000
605	Uniform Force	Global X	0.0050		0.0000	1.0000
401	Uniform Force	Global X	0.0188		0.0000	1.0000
402	Uniform Force	Global X	0.0188		0.0000	1.0000
403	Uniform Force	Global X	0.0188		0.0000	1.0000
405	Trapezoidal Force	Global X	0.0300	0.0300	0.0000	1.0000
406	Trapezoidal Force	Global X	0.0300	0.0300	0.0000	1.0000
407	Trapezoidal Force	Global X	0.0300	0.0300	0.0000	1.0000
408	Trapezoidal Force	Global X	0.0300	0.0200	0.0000	1.0000
409	Trapezoidal Force	Global X	0.0200	0.0200	0.0000	1.0000
410	Trapezoidal Force	Global X	0.0200	0.0200	0.0000	1.0000
411	Trapezoidal Force	Global X	0.0200	0.0200	0.0000	1.0000
412	Trapezoidal Force	Global X	0.0200	0.0200	0.0000	1.0000
413	Trapezoidal Force	Global X	0.0200	0.0200	0.0000	1.0000

LOAD CASE WS -60 deg 70mph, Member Loads

Member	Type	Direction	Magnitude at Start (kips or kips-ft)	Magnitude at End (kips or kips-ft)	Start Position (x/L)	End Position from start (x/L)
1	Uniform Force	Global Y	0.0870		0.0000	1.0000
2	Uniform Force	Global Y	0.0870		0.0000	1.0000
3	Uniform Force	Global Y	0.0870		0.0000	1.0000
4	Uniform Force	Global Y	0.0870		0.0000	1.0000
5	Uniform Force	Global Y	0.0870		0.0000	1.0000
6	Uniform Force	Global Y	0.0870		0.0000	1.0000
7	Uniform Force	Global Y	0.0870		0.0000	1.0000
8	Uniform Force	Global Y	0.0870		0.0000	1.0000
9	Uniform Force	Global Y	0.0870		0.0000	1.0000
10	Uniform Force	Global Y	0.0870		0.0000	1.0000
11	Uniform Force	Global Y	0.0870		0.0000	1.0000
12	Uniform Force	Global Y	0.0870		0.0000	1.0000
13	Uniform Force	Global Y	0.0870		0.0000	1.0000
14	Uniform Force	Global Y	0.0870		0.0000	1.0000
15	Uniform Force	Global Y	0.0870		0.0000	1.0000
16	Uniform Force	Global Y	0.0870		0.0000	1.0000
17	Uniform Force	Global Y	0.0870		0.0000	1.0000
18	Uniform Force	Global Y	0.0870		0.0000	1.0000
19	Uniform Force	Global Y	0.0870		0.0000	1.0000
20	Uniform Force	Global Y	0.0870		0.0000	1.0000
21	Uniform Force	Global Y	0.0870		0.0000	1.0000
22	Uniform Force	Global Y	0.0870		0.0000	1.0000
23	Uniform Force	Global Y	0.0870		0.0000	1.0000
24	Uniform Force	Global Y	0.0870		0.0000	1.0000
25	Uniform Force	Global Y	0.0870		0.0000	1.0000
26	Uniform Force	Global Y	0.0870		0.0000	1.0000
27	Uniform Force	Global Y	0.0870		0.0000	1.0000
28	Uniform Force	Global Y	0.0870		0.0000	1.0000
29	Uniform Force	Global Y	0.0870		0.0000	1.0000
30	Uniform Force	Global Y	0.0870		0.0000	1.0000
31	Uniform Force	Global Y	0.0870		0.0000	1.0000
32	Uniform Force	Global Y	0.0870		0.0000	1.0000

LOAD CASE WS -60 deg 70mph, Member Loads

Member	Type	Direction	Magnitude at Start (kips or kips-ft)	Magnitude at End (kips or kips-ft)	Start Position (x/L)	End Position from start (x/L)
33	Uniform Force	Global Y	0.0870		0.0000	1.0000
34	Uniform Force	Global Y	0.0870		0.0000	1.0000
35	Uniform Force	Global Y	0.0870		0.0000	1.0000
36	Uniform Force	Global Y	0.0870		0.0000	1.0000
37	Uniform Force	Global Y	0.0870		0.0000	1.0000
38	Uniform Force	Global Y	0.0870		0.0000	1.0000
39	Uniform Force	Global Y	0.0870		0.0000	1.0000
40	Uniform Force	Global Y	0.0870		0.0000	1.0000
41	Uniform Force	Global Y	0.0870		0.0000	1.0000
42	Uniform Force	Global Y	0.0870		0.0000	1.0000
43	Uniform Force	Global Y	0.0870		0.0000	1.0000
44	Uniform Force	Global Y	0.0870		0.0000	1.0000
45	Uniform Force	Global Y	0.0870		0.0000	1.0000
46	Uniform Force	Global Y	0.0870		0.0000	1.0000
47	Uniform Force	Global Y	0.0870		0.0000	1.0000
48	Uniform Force	Global Y	0.0870		0.0000	1.0000
49	Uniform Force	Global Y	0.0870		0.0000	1.0000
50	Uniform Force	Global Y	0.0870		0.0000	1.0000
51	Uniform Force	Global Y	0.0870		0.0000	1.0000
52	Uniform Force	Global Y	0.0870		0.0000	1.0000
53	Uniform Force	Global Y	0.0870		0.0000	1.0000
54	Uniform Force	Global Y	0.0870		0.0000	1.0000
55	Uniform Force	Global Y	0.0870		0.0000	1.0000
56	Uniform Force	Global Y	0.0870		0.0000	1.0000
57	Uniform Force	Global Y	0.0870		0.0000	1.0000
101	Uniform Force	Global Y	0.0090		0.0000	1.0000
102	Uniform Force	Global Y	0.0090		0.0000	1.0000
103	Uniform Force	Global Y	0.0090		0.0000	1.0000
104	Uniform Force	Global Y	0.0090		0.0000	1.0000
105	Uniform Force	Global Y	0.0090		0.0000	1.0000
106	Uniform Force	Global Y	0.0090		0.0000	1.0000
107	Uniform Force	Global Y	0.0090		0.0000	1.0000
108	Uniform Force	Global Y	0.0090		0.0000	1.0000
109	Uniform Force	Global Y	0.0090		0.0000	1.0000

LOAD CASE WS -60 deg 70mph, Member Loads

Member	Type	Direction	Magnitude at Start (kips or kips-ft)	Magnitude at End (kips or kips-ft)	Start Position (x/L)	End Position from start (x/L)
110	Uniform Force	Global Y	0.0090		0.0000	1.0000
111	Uniform Force	Global Y	0.0090		0.0000	1.0000
112	Uniform Force	Global Y	0.0090		0.0000	1.0000
113	Uniform Force	Global Y	0.0090		0.0000	1.0000
114	Uniform Force	Global Y	0.0090		0.0000	1.0000
115	Uniform Force	Global Y	0.0090		0.0000	1.0000
116	Uniform Force	Global Y	0.0090		0.0000	1.0000
117	Uniform Force	Global Y	0.0090		0.0000	1.0000
118	Uniform Force	Global Y	0.0090		0.0000	1.0000
119	Uniform Force	Global Y	0.0090		0.0000	1.0000
120	Uniform Force	Global Y	0.0090		0.0000	1.0000
121	Uniform Force	Global Y	0.0090		0.0000	1.0000
122	Uniform Force	Global Y	0.0090		0.0000	1.0000
123	Uniform Force	Global Y	0.0090		0.0000	1.0000
124	Uniform Force	Global Y	0.0090		0.0000	1.0000
125	Uniform Force	Global Y	0.0090		0.0000	1.0000
126	Uniform Force	Global Y	0.0090		0.0000	1.0000
127	Uniform Force	Global Y	0.0090		0.0000	1.0000
128	Uniform Force	Global Y	0.0090		0.0000	1.0000
129	Uniform Force	Global Y	0.0090		0.0000	1.0000
130	Uniform Force	Global Y	0.0090		0.0000	1.0000
131	Uniform Force	Global Y	0.0090		0.0000	1.0000
132	Uniform Force	Global Y	0.0090		0.0000	1.0000
133	Uniform Force	Global Y	0.0090		0.0000	1.0000
134	Uniform Force	Global Y	0.0090		0.0000	1.0000
135	Uniform Force	Global Y	0.0090		0.0000	1.0000
136	Uniform Force	Global Y	0.0090		0.0000	1.0000
137	Uniform Force	Global Y	0.0090		0.0000	1.0000
138	Uniform Force	Global Y	0.0090		0.0000	1.0000
139	Uniform Force	Global Y	0.0090		0.0000	1.0000
140	Uniform Force	Global Y	0.0090		0.0000	1.0000
141	Uniform Force	Global Y	0.0090		0.0000	1.0000
142	Uniform Force	Global Y	0.0090		0.0000	1.0000
143	Uniform Force	Global Y	0.0090		0.0000	1.0000

LOAD CASE WS -60 deg 70mph, Member Loads

Member	Type	Direction	Magnitude at Start (kips or kips-ft)	Magnitude at End (kips or kips-ft)	Start Position (x/L)	End Position from start (x/L)
144	Uniform Force	Global Y	0.0090		0.0000	1.0000
145	Uniform Force	Global Y	0.0090		0.0000	1.0000
146	Uniform Force	Global Y	0.0090		0.0000	1.0000
147	Uniform Force	Global Y	0.0090		0.0000	1.0000
148	Uniform Force	Global Y	0.0090		0.0000	1.0000
149	Uniform Force	Global Y	0.0090		0.0000	1.0000
150	Uniform Force	Global Y	0.0090		0.0000	1.0000
151	Uniform Force	Global Y	0.0090		0.0000	1.0000
152	Uniform Force	Global Y	0.0090		0.0000	1.0000
153	Uniform Force	Global Y	0.0090		0.0000	1.0000
154	Uniform Force	Global Y	0.0090		0.0000	1.0000
155	Uniform Force	Global Y	0.0090		0.0000	1.0000
156	Uniform Force	Global Y	0.0090		0.0000	1.0000
157	Uniform Force	Global Y	0.0090		0.0000	1.0000
158	Uniform Force	Global Y	0.0090		0.0000	1.0000
159	Uniform Force	Global Y	0.0090		0.0000	1.0000
160	Uniform Force	Global Y	0.0090		0.0000	1.0000
701	Uniform Force	Global Y	0.0090		0.0000	1.0000
702	Uniform Force	Global Y	0.0090		0.0000	1.0000
703	Uniform Force	Global Y	0.0090		0.0000	1.0000
704	Uniform Force	Global Y	0.0090		0.0000	1.0000
705	Uniform Force	Global Y	0.0090		0.0000	1.0000
706	Uniform Force	Global Y	0.0090		0.0000	1.0000
707	Uniform Force	Global Y	0.0090		0.0000	1.0000
708	Uniform Force	Global Y	0.0090		0.0000	1.0000
709	Uniform Force	Global Y	0.0090		0.0000	1.0000
710	Uniform Force	Global Y	0.0090		0.0000	1.0000
711	Uniform Force	Global Y	0.0090		0.0000	1.0000
712	Uniform Force	Global Y	0.0090		0.0000	1.0000
713	Uniform Force	Global Y	0.0090		0.0000	1.0000
714	Uniform Force	Global Y	0.0090		0.0000	1.0000
715	Uniform Force	Global Y	0.0090		0.0000	1.0000
716	Uniform Force	Global Y	0.0090		0.0000	1.0000
717	Uniform Force	Global Y	0.0090		0.0000	1.0000

LOAD CASE WS -60 deg 70mph, Member Loads

Member	Type	Direction	Magnitude at Start (kips or kips-ft)	Magnitude at End (kips or kips-ft)	Start Position (x/L)	End Position from start (x/L)
718	Uniform Force	Global Y	0.0090		0.0000	1.0000
719	Uniform Force	Global Y	0.0090		0.0000	1.0000
720	Uniform Force	Global Y	0.0090		0.0000	1.0000
721	Uniform Force	Global Y	0.0090		0.0000	1.0000
722	Uniform Force	Global Y	0.0090		0.0000	1.0000
723	Uniform Force	Global Y	0.0090		0.0000	1.0000
724	Uniform Force	Global Y	0.0090		0.0000	1.0000
725	Uniform Force	Global Y	0.0090		0.0000	1.0000
726	Uniform Force	Global Y	0.0090		0.0000	1.0000
727	Uniform Force	Global Y	0.0090		0.0000	1.0000
728	Uniform Force	Global Y	0.0090		0.0000	1.0000
729	Uniform Force	Global Y	0.0090		0.0000	1.0000
730	Uniform Force	Global Y	0.0090		0.0000	1.0000
731	Uniform Force	Global Y	0.0090		0.0000	1.0000
732	Uniform Force	Global Y	0.0090		0.0000	1.0000
733	Uniform Force	Global Y	0.0090		0.0000	1.0000
740	Uniform Force	Global Y	0.0090		0.0000	1.0000
741	Uniform Force	Global Y	0.0090		0.0000	1.0000
742	Uniform Force	Global Y	0.0090		0.0000	1.0000
743	Uniform Force	Global Y	0.0090		0.0000	1.0000
744	Uniform Force	Global Y	0.0090		0.0000	1.0000
745	Uniform Force	Global Y	0.0090		0.0000	1.0000
746	Uniform Force	Global Y	0.0090		0.0000	1.0000
747	Uniform Force	Global Y	0.0090		0.0000	1.0000
748	Uniform Force	Global Y	0.0090		0.0000	1.0000
749	Uniform Force	Global Y	0.0090		0.0000	1.0000
750	Uniform Force	Global Y	0.0090		0.0000	1.0000
751	Uniform Force	Global Y	0.0090		0.0000	1.0000
752	Uniform Force	Global Y	0.0090		0.0000	1.0000
753	Uniform Force	Global Y	0.0090		0.0000	1.0000
754	Uniform Force	Global Y	0.0090		0.0000	1.0000
755	Uniform Force	Global Y	0.0090		0.0000	1.0000
756	Uniform Force	Global Y	0.0090		0.0000	1.0000
757	Uniform Force	Global Y	0.0090		0.0000	1.0000

LOAD CASE WS -60 deg 70mph, Member Loads

Member	Type	Direction	Magnitude at Start (kips or kips-ft)	Magnitude at End (kips or kips-ft)	Start Position (x/L)	End Position from start (x/L)
758	Uniform Force	Global Y	0.0090		0.0000	1.0000
759	Uniform Force	Global Y	0.0090		0.0000	1.0000
760	Uniform Force	Global Y	0.0090		0.0000	1.0000
761	Uniform Force	Global Y	0.0090		0.0000	1.0000
762	Uniform Force	Global Y	0.0090		0.0000	1.0000
763	Uniform Force	Global Y	0.0090		0.0000	1.0000
764	Uniform Force	Global Y	0.0090		0.0000	1.0000
765	Uniform Force	Global Y	0.0090		0.0000	1.0000
766	Uniform Force	Global Y	0.0090		0.0000	1.0000
767	Uniform Force	Global Y	0.0090		0.0000	1.0000
768	Uniform Force	Global Y	0.0090		0.0000	1.0000
769	Uniform Force	Global Y	0.0090		0.0000	1.0000
770	Uniform Force	Global Y	0.0090		0.0000	1.0000
771	Uniform Force	Global Y	0.0090		0.0000	1.0000
772	Uniform Force	Global Y	0.0090		0.0000	1.0000
1	Uniform Moment	Local x	-0.3100		0.0000	1.0000
2	Uniform Moment	Local x	-0.3100		0.0000	1.0000
3	Uniform Moment	Local x	-0.3100		0.0000	1.0000
4	Uniform Moment	Local x	-0.3100		0.0000	1.0000
5	Uniform Moment	Local x	-0.3100		0.0000	1.0000
6	Uniform Moment	Local x	-0.3100		0.0000	1.0000
7	Uniform Moment	Local x	-0.3100		0.0000	1.0000
8	Uniform Moment	Local x	-0.3100		0.0000	1.0000
9	Uniform Moment	Local x	-0.3100		0.0000	1.0000
10	Uniform Moment	Local x	-0.3100		0.0000	1.0000
11	Uniform Moment	Local x	-0.3100		0.0000	1.0000
12	Uniform Moment	Local x	-0.3100		0.0000	1.0000
13	Uniform Moment	Local x	-0.3100		0.0000	1.0000
14	Uniform Moment	Local x	-0.3100		0.0000	1.0000
15	Uniform Moment	Local x	-0.3100		0.0000	1.0000
16	Uniform Moment	Local x	-0.3100		0.0000	1.0000
17	Uniform Moment	Local x	-0.3100		0.0000	1.0000
18	Uniform Moment	Local x	-0.3100		0.0000	1.0000
19	Uniform Moment	Local x	-0.3100		0.0000	1.0000

LOAD CASE WS -60 deg 70mph, Member Loads

Member	Type	Direction	Magnitude at Start (kips or kips-ft)	Magnitude at End (kips or kips-ft)	Start Position (x/L)	End Position from start (x/L)
20	Uniform Moment	Local x	-0.3100		0.0000	1.0000
21	Uniform Moment	Local x	-0.3100		0.0000	1.0000
22	Uniform Moment	Local x	-0.3100		0.0000	1.0000
23	Uniform Moment	Local x	-0.3100		0.0000	1.0000
24	Uniform Moment	Local x	-0.3100		0.0000	1.0000
25	Uniform Moment	Local x	-0.3100		0.0000	1.0000
26	Uniform Moment	Local x	-0.3100		0.0000	1.0000
27	Uniform Moment	Local x	-0.3100		0.0000	1.0000
28	Uniform Moment	Local x	-0.3100		0.0000	1.0000
29	Uniform Moment	Local x	-0.3100		0.0000	1.0000
30	Uniform Moment	Local x	-0.3100		0.0000	1.0000
31	Uniform Moment	Local x	-0.3100		0.0000	1.0000
32	Uniform Moment	Local x	-0.3100		0.0000	1.0000
33	Uniform Moment	Local x	-0.3100		0.0000	1.0000
34	Uniform Moment	Local x	-0.3100		0.0000	1.0000
35	Uniform Moment	Local x	-0.3100		0.0000	1.0000
36	Uniform Moment	Local x	-0.3100		0.0000	1.0000
37	Uniform Moment	Local x	-0.3100		0.0000	1.0000
38	Uniform Moment	Local x	-0.3100		0.0000	1.0000
39	Uniform Moment	Local x	-0.3100		0.0000	1.0000
40	Uniform Moment	Local x	-0.3100		0.0000	1.0000
41	Uniform Moment	Local x	-0.3100		0.0000	1.0000
42	Uniform Moment	Local x	-0.3100		0.0000	1.0000
43	Uniform Moment	Local x	-0.3100		0.0000	1.0000
44	Uniform Moment	Local x	-0.3100		0.0000	1.0000
45	Uniform Moment	Local x	-0.3100		0.0000	1.0000
46	Uniform Moment	Local x	-0.3100		0.0000	1.0000
47	Uniform Moment	Local x	-0.3100		0.0000	1.0000
48	Uniform Moment	Local x	-0.3100		0.0000	1.0000
49	Uniform Moment	Local x	-0.3100		0.0000	1.0000
50	Uniform Moment	Local x	-0.3100		0.0000	1.0000
51	Uniform Moment	Local x	-0.3100		0.0000	1.0000
52	Uniform Moment	Local x	-0.3100		0.0000	1.0000
53	Uniform Moment	Local x	-0.3100		0.0000	1.0000

LOAD CASE WS -60 deg 70mph, Member Loads

Member	Type	Direction	Magnitude at Start (kips or kips-ft)	Magnitude at End (kips or kips-ft)	Start Position (x/L)	End Position from start (x/L)
54	Uniform Moment	Local x	-0.3100		0.0000	1.0000
55	Uniform Moment	Local x	-0.3100		0.0000	1.0000
56	Uniform Moment	Local x	-0.3100		0.0000	1.0000
57	Uniform Moment	Local x	-0.3100		0.0000	1.0000
1	Uniform Force	Local x	-0.1800		0.0000	1.0000
2	Uniform Force	Local x	-0.1800		0.0000	1.0000
3	Uniform Force	Local x	-0.1800		0.0000	1.0000
4	Uniform Force	Local x	-0.1800		0.0000	1.0000
5	Uniform Force	Local x	-0.1800		0.0000	1.0000
6	Uniform Force	Local x	-0.1800		0.0000	1.0000
7	Uniform Force	Local x	-0.1800		0.0000	1.0000
8	Uniform Force	Local x	-0.1800		0.0000	1.0000
9	Uniform Force	Local x	-0.1800		0.0000	1.0000
10	Uniform Force	Local x	-0.1800		0.0000	1.0000
11	Uniform Force	Local x	-0.1800		0.0000	1.0000
12	Uniform Force	Local x	-0.1800		0.0000	1.0000
13	Uniform Force	Local x	-0.1800		0.0000	1.0000
14	Uniform Force	Local x	-0.1800		0.0000	1.0000
15	Uniform Force	Local x	-0.1800		0.0000	1.0000
16	Uniform Force	Local x	-0.1800		0.0000	1.0000
17	Uniform Force	Local x	-0.1800		0.0000	1.0000
18	Uniform Force	Local x	-0.1800		0.0000	1.0000
19	Uniform Force	Local x	-0.1800		0.0000	1.0000
20	Uniform Force	Local x	-0.1800		0.0000	1.0000
21	Uniform Force	Local x	-0.1800		0.0000	1.0000
22	Uniform Force	Local x	-0.1800		0.0000	1.0000
23	Uniform Force	Local x	-0.1800		0.0000	1.0000
24	Uniform Force	Local x	-0.1800		0.0000	1.0000
25	Uniform Force	Local x	-0.1800		0.0000	1.0000
26	Uniform Force	Local x	-0.1800		0.0000	1.0000
27	Uniform Force	Local x	-0.1800		0.0000	1.0000
28	Uniform Force	Local x	-0.1800		0.0000	1.0000
29	Uniform Force	Local x	-0.1800		0.0000	1.0000
30	Uniform Force	Local x	-0.1800		0.0000	1.0000

LOAD CASE WS -60 deg 70mph, Member Loads

Member	Type	Direction	Magnitude at Start (kips or kips-ft)	Magnitude at End (kips or kips-ft)	Start Position (x/L)	End Position from start (x/L)
31	Uniform Force	Local x	-0.1800		0.0000	1.0000
32	Uniform Force	Local x	-0.1800		0.0000	1.0000
33	Uniform Force	Local x	-0.1800		0.0000	1.0000
34	Uniform Force	Local x	-0.1800		0.0000	1.0000
35	Uniform Force	Local x	-0.1800		0.0000	1.0000
36	Uniform Force	Local x	-0.1800		0.0000	1.0000
37	Uniform Force	Local x	-0.1800		0.0000	1.0000
38	Uniform Force	Local x	-0.1800		0.0000	1.0000
39	Uniform Force	Local x	-0.1800		0.0000	1.0000
40	Uniform Force	Local x	-0.1800		0.0000	1.0000
41	Uniform Force	Local x	-0.1800		0.0000	1.0000
42	Uniform Force	Local x	-0.1800		0.0000	1.0000
43	Uniform Force	Local x	-0.1800		0.0000	1.0000
44	Uniform Force	Local x	-0.1800		0.0000	1.0000
45	Uniform Force	Local x	-0.1800		0.0000	1.0000
46	Uniform Force	Local x	-0.1800		0.0000	1.0000
47	Uniform Force	Local x	-0.1800		0.0000	1.0000
48	Uniform Force	Local x	-0.1800		0.0000	1.0000
49	Uniform Force	Local x	-0.1800		0.0000	1.0000
50	Uniform Force	Local x	-0.1800		0.0000	1.0000
51	Uniform Force	Local x	-0.1800		0.0000	1.0000
52	Uniform Force	Local x	-0.1800		0.0000	1.0000
53	Uniform Force	Local x	-0.1800		0.0000	1.0000
54	Uniform Force	Local x	-0.1800		0.0000	1.0000
55	Uniform Force	Local x	-0.1800		0.0000	1.0000
56	Uniform Force	Local x	-0.1800		0.0000	1.0000
57	Uniform Force	Local x	-0.1800		0.0000	1.0000
101	Uniform Force	Local x	-0.0190		0.0000	1.0000
102	Uniform Force	Local x	-0.0190		0.0000	1.0000
103	Uniform Force	Local x	-0.0190		0.0000	1.0000
104	Uniform Force	Local x	-0.0190		0.0000	1.0000
105	Uniform Force	Local x	-0.0190		0.0000	1.0000
106	Uniform Force	Local x	-0.0190		0.0000	1.0000
107	Uniform Force	Local x	-0.0190		0.0000	1.0000

LOAD CASE WS -60 deg 70mph, Member Loads

Member	Type	Direction	Magnitude at Start (kips or kips-ft)	Magnitude at End (kips or kips-ft)	Start Position (x/L)	End Position from start (x/L)
108	Uniform Force	Local x	-0.0190		0.0000	1.0000
109	Uniform Force	Local x	-0.0190		0.0000	1.0000
110	Uniform Force	Local x	-0.0190		0.0000	1.0000
111	Uniform Force	Local x	-0.0190		0.0000	1.0000
112	Uniform Force	Local x	-0.0190		0.0000	1.0000
113	Uniform Force	Local x	-0.0190		0.0000	1.0000
114	Uniform Force	Local x	-0.0190		0.0000	1.0000
115	Uniform Force	Local x	-0.0190		0.0000	1.0000
116	Uniform Force	Local x	-0.0190		0.0000	1.0000
117	Uniform Force	Local x	-0.0190		0.0000	1.0000
118	Uniform Force	Local x	-0.0190		0.0000	1.0000
119	Uniform Force	Local x	-0.0190		0.0000	1.0000
120	Uniform Force	Local x	-0.0190		0.0000	1.0000
121	Uniform Force	Local x	-0.0190		0.0000	1.0000
122	Uniform Force	Local x	-0.0190		0.0000	1.0000
123	Uniform Force	Local x	-0.0190		0.0000	1.0000
124	Uniform Force	Local x	-0.0190		0.0000	1.0000
125	Uniform Force	Local x	-0.0190		0.0000	1.0000
126	Uniform Force	Local x	-0.0190		0.0000	1.0000
127	Uniform Force	Local x	-0.0190		0.0000	1.0000
128	Uniform Force	Local x	-0.0190		0.0000	1.0000
129	Uniform Force	Local x	-0.0190		0.0000	1.0000
130	Uniform Force	Local x	-0.0190		0.0000	1.0000
131	Uniform Force	Local x	-0.0190		0.0000	1.0000
132	Uniform Force	Local x	-0.0190		0.0000	1.0000
133	Uniform Force	Local x	-0.0190		0.0000	1.0000
134	Uniform Force	Local x	-0.0190		0.0000	1.0000
135	Uniform Force	Local x	-0.0190		0.0000	1.0000
136	Uniform Force	Local x	-0.0190		0.0000	1.0000
137	Uniform Force	Local x	-0.0190		0.0000	1.0000
138	Uniform Force	Local x	-0.0190		0.0000	1.0000
139	Uniform Force	Local x	-0.0190		0.0000	1.0000
140	Uniform Force	Local x	-0.0190		0.0000	1.0000
141	Uniform Force	Local x	-0.0190		0.0000	1.0000

LOAD CASE WS -60 deg 70mph, Member Loads

Member	Type	Direction	Magnitude at Start (kips or kips-ft)	Magnitude at End (kips or kips-ft)	Start Position (x/L)	End Position from start (x/L)
142	Uniform Force	Local x	-0.0190		0.0000	1.0000
143	Uniform Force	Local x	-0.0190		0.0000	1.0000
144	Uniform Force	Local x	-0.0190		0.0000	1.0000
145	Uniform Force	Local x	-0.0190		0.0000	1.0000
146	Uniform Force	Local x	-0.0190		0.0000	1.0000
147	Uniform Force	Local x	-0.0190		0.0000	1.0000
148	Uniform Force	Local x	-0.0190		0.0000	1.0000
149	Uniform Force	Local x	-0.0190		0.0000	1.0000
150	Uniform Force	Local x	-0.0190		0.0000	1.0000
151	Uniform Force	Local x	-0.0190		0.0000	1.0000
152	Uniform Force	Local x	-0.0190		0.0000	1.0000
153	Uniform Force	Local x	-0.0190		0.0000	1.0000
154	Uniform Force	Local x	-0.0190		0.0000	1.0000
155	Uniform Force	Local x	-0.0190		0.0000	1.0000
156	Uniform Force	Local x	-0.0190		0.0000	1.0000
157	Uniform Force	Local x	-0.0190		0.0000	1.0000
158	Uniform Force	Local x	-0.0190		0.0000	1.0000
159	Uniform Force	Local x	-0.0190		0.0000	1.0000
160	Uniform Force	Local x	-0.0190		0.0000	1.0000
701	Uniform Force	Global X	-0.0180		0.0000	1.0000
702	Uniform Force	Global X	-0.0180		0.0000	1.0000
703	Uniform Force	Global X	-0.0180		0.0000	1.0000
704	Uniform Force	Global X	-0.0180		0.0000	1.0000
705	Uniform Force	Global X	-0.0180		0.0000	1.0000
706	Uniform Force	Global X	-0.0180		0.0000	1.0000
707	Uniform Force	Global X	-0.0180		0.0000	1.0000
708	Uniform Force	Global X	-0.0180		0.0000	1.0000
709	Uniform Force	Global X	-0.0180		0.0000	1.0000
710	Uniform Force	Global X	-0.0180		0.0000	1.0000
711	Uniform Force	Global X	-0.0180		0.0000	1.0000
712	Uniform Force	Global X	-0.0180		0.0000	1.0000
713	Uniform Force	Global X	-0.0180		0.0000	1.0000
714	Uniform Force	Global X	-0.0180		0.0000	1.0000
715	Uniform Force	Global X	-0.0180		0.0000	1.0000

LOAD CASE WS -60 deg 70mph, Member Loads

Member	Type	Direction	Magnitude at Start (kips or kips-ft)	Magnitude at End (kips or kips-ft)	Start Position (x/L)	End Position from start (x/L)
716	Uniform Force	Global X	-0.0180		0.0000	1.0000
717	Uniform Force	Global X	-0.0180		0.0000	1.0000
718	Uniform Force	Global X	-0.0180		0.0000	1.0000
719	Uniform Force	Global X	-0.0180		0.0000	1.0000
720	Uniform Force	Global X	-0.0180		0.0000	1.0000
721	Uniform Force	Global X	-0.0180		0.0000	1.0000
722	Uniform Force	Global X	-0.0180		0.0000	1.0000
723	Uniform Force	Global X	-0.0180		0.0000	1.0000
724	Uniform Force	Global X	-0.0180		0.0000	1.0000
725	Uniform Force	Global X	-0.0180		0.0000	1.0000
726	Uniform Force	Global X	-0.0180		0.0000	1.0000
727	Uniform Force	Global X	-0.0180		0.0000	1.0000
728	Uniform Force	Global X	-0.0180		0.0000	1.0000
729	Uniform Force	Global X	-0.0180		0.0000	1.0000
730	Uniform Force	Global X	-0.0180		0.0000	1.0000
731	Uniform Force	Global X	-0.0180		0.0000	1.0000
732	Uniform Force	Global X	-0.0180		0.0000	1.0000
733	Uniform Force	Global X	-0.0180		0.0000	1.0000
740	Uniform Force	Global X	-0.0180		0.0000	1.0000
741	Uniform Force	Global X	-0.0180		0.0000	1.0000
742	Uniform Force	Global X	-0.0180		0.0000	1.0000
743	Uniform Force	Global X	-0.0180		0.0000	1.0000
744	Uniform Force	Global X	-0.0180		0.0000	1.0000
745	Uniform Force	Global X	-0.0180		0.0000	1.0000
746	Uniform Force	Global X	-0.0180		0.0000	1.0000
747	Uniform Force	Global X	-0.0180		0.0000	1.0000
748	Uniform Force	Global X	-0.0180		0.0000	1.0000
749	Uniform Force	Global X	-0.0180		0.0000	1.0000
750	Uniform Force	Global X	-0.0180		0.0000	1.0000
751	Uniform Force	Global X	-0.0180		0.0000	1.0000
752	Uniform Force	Global X	-0.0180		0.0000	1.0000
753	Uniform Force	Global X	-0.0180		0.0000	1.0000
754	Uniform Force	Global X	-0.0180		0.0000	1.0000
755	Uniform Force	Global X	-0.0180		0.0000	1.0000

LOAD CASE WS -60 deg 70mph, Member Loads

Member	Type	Direction	Magnitude at Start (kips or kips-ft)	Magnitude at End (kips or kips-ft)	Start Position (x/L)	End Position from start (x/L)
756	Uniform Force	Global X	-0.0180		0.0000	1.0000
757	Uniform Force	Global X	-0.0180		0.0000	1.0000
758	Uniform Force	Global X	-0.0180		0.0000	1.0000
759	Uniform Force	Global X	-0.0180		0.0000	1.0000
760	Uniform Force	Global X	-0.0180		0.0000	1.0000
761	Uniform Force	Global X	-0.0180		0.0000	1.0000
762	Uniform Force	Global X	-0.0180		0.0000	1.0000
763	Uniform Force	Global X	-0.0180		0.0000	1.0000
764	Uniform Force	Global X	-0.0180		0.0000	1.0000
765	Uniform Force	Global X	-0.0180		0.0000	1.0000
766	Uniform Force	Global X	-0.0180		0.0000	1.0000
767	Uniform Force	Global X	-0.0180		0.0000	1.0000
768	Uniform Force	Global X	-0.0180		0.0000	1.0000
769	Uniform Force	Global X	-0.0180		0.0000	1.0000
770	Uniform Force	Global X	-0.0180		0.0000	1.0000
771	Uniform Force	Global X	-0.0180		0.0000	1.0000
772	Uniform Force	Global X	-0.0180		0.0000	1.0000
2002	Uniform Force	Global Y	0.0435		0.0000	1.0000
2003	Uniform Force	Global Y	0.0435		0.0000	1.0000
2002	Trapezoidal Force	Global X	-0.2300	-0.1800	0.0000	1.0000
2003	Trapezoidal Force	Global X	-0.1800	-0.1300	0.0000	1.0000
1017	Uniform Force	Global Y	0.0360		0.0000	1.0000
1018	Uniform Force	Global Y	0.0360		0.0000	1.0000
1019	Uniform Force	Global Y	0.0360		0.0000	1.0000
1017	Uniform Force	Global X	-0.0260		0.0000	1.0000
1018	Uniform Force	Global X	-0.0260		0.0000	1.0000
1019	Uniform Force	Global X	-0.0260		0.0000	1.0000
1013	Uniform Force	Global Y	0.0360		0.0000	1.0000
1014	Uniform Force	Global Y	0.0360		0.0000	1.0000
1015	Uniform Force	Global Y	0.0360		0.0000	1.0000
1013	Uniform Force	Global X	-0.0260		0.0000	1.0000
1014	Uniform Force	Global X	-0.0260		0.0000	1.0000
1015	Uniform Force	Global X	-0.0260		0.0000	1.0000
3017	Uniform Force	Global Y	0.0360		0.0000	1.0000

LOAD CASE WS -60 deg 70mph, Member Loads

Member	Type	Direction	Magnitude at Start (kips or kips-ft)	Magnitude at End (kips or kips-ft)	Start Position (x/L)	End Position from start (x/L)
3018	Uniform Force	Global Y	0.0360		0.0000	1.0000
3019	Uniform Force	Global Y	0.0360		0.0000	1.0000
3017	Uniform Force	Global X	-0.0260		0.0000	1.0000
3018	Uniform Force	Global X	-0.0260		0.0000	1.0000
3019	Uniform Force	Global X	-0.0260		0.0000	1.0000
3013	Uniform Force	Global Y	0.0360		0.0000	1.0000
3014	Uniform Force	Global Y	0.0360		0.0000	1.0000
3015	Uniform Force	Global Y	0.0360		0.0000	1.0000
3013	Uniform Force	Global X	-0.0260		0.0000	1.0000
3014	Uniform Force	Global X	-0.0260		0.0000	1.0000
3015	Uniform Force	Global X	-0.0260		0.0000	1.0000
1006	Uniform Force	Global X	-0.0650		0.0000	1.0000
1007	Uniform Force	Global X	-0.0650		0.0000	1.0000
1008	Uniform Force	Global X	-0.0650		0.0000	1.0000
1009	Uniform Force	Global X	-0.0650		0.0000	1.0000
1010	Uniform Force	Global X	-0.0650		0.0000	1.0000
1011	Uniform Force	Global X	-0.0650		0.0000	1.0000
1012	Uniform Force	Global X	-0.0650		0.0000	1.0000
3006	Uniform Force	Global X	-0.0650		0.0000	1.0000
3007	Uniform Force	Global X	-0.0650		0.0000	1.0000
3008	Uniform Force	Global X	-0.0650		0.0000	1.0000
3009	Uniform Force	Global X	-0.0650		0.0000	1.0000
3010	Uniform Force	Global X	-0.0650		0.0000	1.0000
3011	Uniform Force	Global X	-0.0650		0.0000	1.0000
3012	Uniform Force	Global X	-0.0650		0.0000	1.0000
501	Uniform Force	Global Y	0.0110		0.0000	1.0000
502	Uniform Force	Global Y	0.0110		0.0000	1.0000
503	Uniform Force	Global Y	0.0110		0.0000	1.0000
504	Uniform Force	Global Y	0.0110		0.0000	1.0000
505	Uniform Force	Global Y	0.0110		0.0000	1.0000
601	Uniform Force	Global Y	0.0110		0.0000	1.0000
602	Uniform Force	Global Y	0.0110		0.0000	1.0000
603	Uniform Force	Global Y	0.0110		0.0000	1.0000
604	Uniform Force	Global Y	0.0110		0.0000	1.0000

LOAD CASE WS -60 deg 70mph, Member Loads

Member	Type	Direction	Magnitude at Start (kips or kips-ft)	Magnitude at End (kips or kips-ft)	Start Position (x/L)	End Position from start (x/L)
605	Uniform Force	Global Y	0.0110		0.0000	1.0000
401	Uniform Force	Global Y	0.0435		0.0000	1.0000
402	Uniform Force	Global Y	0.0435		0.0000	1.0000
403	Uniform Force	Global Y	0.0435		0.0000	1.0000
405	Trapezoidal Force	Global Y	0.0500	0.0500	0.0000	1.0000
406	Trapezoidal Force	Global Y	0.0500	0.0500	0.0000	1.0000
407	Trapezoidal Force	Global Y	0.0500	0.0500	0.0000	1.0000
408	Trapezoidal Force	Global Y	0.0500	0.0400	0.0000	1.0000
409	Trapezoidal Force	Global Y	0.0400	0.0400	0.0000	1.0000
410	Trapezoidal Force	Global Y	0.0400	0.0400	0.0000	1.0000
411	Trapezoidal Force	Global Y	0.0400	0.0400	0.0000	1.0000
412	Trapezoidal Force	Global Y	0.0400	0.0400	0.0000	1.0000
413	Trapezoidal Force	Global Y	0.0400	0.0300	0.0000	1.0000
501	Uniform Force	Global X	-0.0180		0.0000	1.0000
502	Uniform Force	Global X	-0.0180		0.0000	1.0000
503	Uniform Force	Global X	-0.0180		0.0000	1.0000
504	Uniform Force	Global X	-0.0180		0.0000	1.0000
505	Uniform Force	Global X	-0.0180		0.0000	1.0000
601	Uniform Force	Global X	-0.0180		0.0000	1.0000
602	Uniform Force	Global X	-0.0180		0.0000	1.0000
603	Uniform Force	Global X	-0.0180		0.0000	1.0000
604	Uniform Force	Global X	-0.0180		0.0000	1.0000
605	Uniform Force	Global X	-0.0180		0.0000	1.0000
401	Uniform Force	Global X	-0.0650		0.0000	1.0000
402	Uniform Force	Global X	-0.0650		0.0000	1.0000
403	Uniform Force	Global X	-0.0650		0.0000	1.0000
405	Trapezoidal Force	Global X	-0.1000	-0.0900	0.0000	1.0000
406	Trapezoidal Force	Global X	-0.0900	-0.0900	0.0000	1.0000
407	Trapezoidal Force	Global X	-0.0900	-0.0800	0.0000	1.0000
408	Trapezoidal Force	Global X	-0.0800	-0.0800	0.0000	1.0000
409	Trapezoidal Force	Global X	-0.0800	-0.0700	0.0000	1.0000
410	Trapezoidal Force	Global X	-0.0700	-0.0700	0.0000	1.0000
411	Trapezoidal Force	Global X	-0.0700	-0.0700	0.0000	1.0000
412	Trapezoidal Force	Global X	-0.0700	-0.0600	0.0000	1.0000

LOAD CASE WS -60 deg 70mph, Member Loads

Member	Type	Direction	Magnitude at Start (kips or kips-ft)	Magnitude at End (kips or kips-ft)	Start Position (x/L)	End Position from start (x/L)
413	Trapezoidal Force	Global X	-0.0600	-0.0600	0.0000	1.0000

LOAD CASE WS_-45 deg_70mph, Member Loads

Member	Type	Direction	Magnitude at Start (kips or kips-ft)	Magnitude at End (kips or kips-ft)	Start Position (x/L)	End Position from start (x/L)
1	Uniform Force	Global Y	0.1710		0.0000	1.0000
2	Uniform Force	Global Y	0.1710		0.0000	1.0000
3	Uniform Force	Global Y	0.1710		0.0000	1.0000
4	Uniform Force	Global Y	0.1710		0.0000	1.0000
5	Uniform Force	Global Y	0.1710		0.0000	1.0000
6	Uniform Force	Global Y	0.1710		0.0000	1.0000
7	Uniform Force	Global Y	0.1710		0.0000	1.0000
8	Uniform Force	Global Y	0.1710		0.0000	1.0000
9	Uniform Force	Global Y	0.1710		0.0000	1.0000
10	Uniform Force	Global Y	0.1710		0.0000	1.0000
11	Uniform Force	Global Y	0.1710		0.0000	1.0000
12	Uniform Force	Global Y	0.1710		0.0000	1.0000
13	Uniform Force	Global Y	0.1710		0.0000	1.0000
14	Uniform Force	Global Y	0.1710		0.0000	1.0000
15	Uniform Force	Global Y	0.1710		0.0000	1.0000
16	Uniform Force	Global Y	0.1710		0.0000	1.0000
17	Uniform Force	Global Y	0.1710		0.0000	1.0000
18	Uniform Force	Global Y	0.1710		0.0000	1.0000
19	Uniform Force	Global Y	0.1710		0.0000	1.0000
20	Uniform Force	Global Y	0.1710		0.0000	1.0000
21	Uniform Force	Global Y	0.1710		0.0000	1.0000
22	Uniform Force	Global Y	0.1710		0.0000	1.0000
23	Uniform Force	Global Y	0.1710		0.0000	1.0000
24	Uniform Force	Global Y	0.1710		0.0000	1.0000
25	Uniform Force	Global Y	0.1710		0.0000	1.0000
26	Uniform Force	Global Y	0.1710		0.0000	1.0000
27	Uniform Force	Global Y	0.1710		0.0000	1.0000
28	Uniform Force	Global Y	0.1710		0.0000	1.0000

LOAD CASE WS -45 deg 70mph, Member Loads

Member	Type	Direction	Magnitude at Start (kips or kips-ft)	Magnitude at End (kips or kips-ft)	Start Position (x/L)	End Position from start (x/L)
29	Uniform Force	Global Y	0.1710		0.0000	1.0000
30	Uniform Force	Global Y	0.1710		0.0000	1.0000
31	Uniform Force	Global Y	0.1710		0.0000	1.0000
32	Uniform Force	Global Y	0.1710		0.0000	1.0000
33	Uniform Force	Global Y	0.1710		0.0000	1.0000
34	Uniform Force	Global Y	0.1710		0.0000	1.0000
35	Uniform Force	Global Y	0.1710		0.0000	1.0000
36	Uniform Force	Global Y	0.1710		0.0000	1.0000
37	Uniform Force	Global Y	0.1710		0.0000	1.0000
38	Uniform Force	Global Y	0.1710		0.0000	1.0000
39	Uniform Force	Global Y	0.1710		0.0000	1.0000
40	Uniform Force	Global Y	0.1710		0.0000	1.0000
41	Uniform Force	Global Y	0.1710		0.0000	1.0000
42	Uniform Force	Global Y	0.1710		0.0000	1.0000
43	Uniform Force	Global Y	0.1710		0.0000	1.0000
44	Uniform Force	Global Y	0.1710		0.0000	1.0000
45	Uniform Force	Global Y	0.1710		0.0000	1.0000
46	Uniform Force	Global Y	0.1710		0.0000	1.0000
47	Uniform Force	Global Y	0.1710		0.0000	1.0000
48	Uniform Force	Global Y	0.1710		0.0000	1.0000
49	Uniform Force	Global Y	0.1710		0.0000	1.0000
50	Uniform Force	Global Y	0.1710		0.0000	1.0000
51	Uniform Force	Global Y	0.1710		0.0000	1.0000
52	Uniform Force	Global Y	0.1710		0.0000	1.0000
53	Uniform Force	Global Y	0.1710		0.0000	1.0000
54	Uniform Force	Global Y	0.1710		0.0000	1.0000
55	Uniform Force	Global Y	0.1710		0.0000	1.0000
56	Uniform Force	Global Y	0.1710		0.0000	1.0000
57	Uniform Force	Global Y	0.1710		0.0000	1.0000
101	Uniform Force	Global Y	0.0180		0.0000	1.0000
102	Uniform Force	Global Y	0.0180		0.0000	1.0000
103	Uniform Force	Global Y	0.0180		0.0000	1.0000
104	Uniform Force	Global Y	0.0180		0.0000	1.0000
105	Uniform Force	Global Y	0.0180		0.0000	1.0000

LOAD CASE WS -45 deg 70mph, Member Loads

Member	Type	Direction	Magnitude at Start (kips or kips-ft)	Magnitude at End (kips or kips-ft)	Start Position (x/L)	End Position from start (x/L)
106	Uniform Force	Global Y	0.0180		0.0000	1.0000
107	Uniform Force	Global Y	0.0180		0.0000	1.0000
108	Uniform Force	Global Y	0.0180		0.0000	1.0000
109	Uniform Force	Global Y	0.0180		0.0000	1.0000
110	Uniform Force	Global Y	0.0180		0.0000	1.0000
111	Uniform Force	Global Y	0.0180		0.0000	1.0000
112	Uniform Force	Global Y	0.0180		0.0000	1.0000
113	Uniform Force	Global Y	0.0180		0.0000	1.0000
114	Uniform Force	Global Y	0.0180		0.0000	1.0000
115	Uniform Force	Global Y	0.0180		0.0000	1.0000
116	Uniform Force	Global Y	0.0180		0.0000	1.0000
117	Uniform Force	Global Y	0.0180		0.0000	1.0000
118	Uniform Force	Global Y	0.0180		0.0000	1.0000
119	Uniform Force	Global Y	0.0180		0.0000	1.0000
120	Uniform Force	Global Y	0.0180		0.0000	1.0000
121	Uniform Force	Global Y	0.0180		0.0000	1.0000
122	Uniform Force	Global Y	0.0180		0.0000	1.0000
123	Uniform Force	Global Y	0.0180		0.0000	1.0000
124	Uniform Force	Global Y	0.0180		0.0000	1.0000
125	Uniform Force	Global Y	0.0180		0.0000	1.0000
126	Uniform Force	Global Y	0.0180		0.0000	1.0000
127	Uniform Force	Global Y	0.0180		0.0000	1.0000
128	Uniform Force	Global Y	0.0180		0.0000	1.0000
129	Uniform Force	Global Y	0.0180		0.0000	1.0000
130	Uniform Force	Global Y	0.0180		0.0000	1.0000
131	Uniform Force	Global Y	0.0180		0.0000	1.0000
132	Uniform Force	Global Y	0.0180		0.0000	1.0000
133	Uniform Force	Global Y	0.0180		0.0000	1.0000
134	Uniform Force	Global Y	0.0180		0.0000	1.0000
135	Uniform Force	Global Y	0.0180		0.0000	1.0000
136	Uniform Force	Global Y	0.0180		0.0000	1.0000
137	Uniform Force	Global Y	0.0180		0.0000	1.0000
138	Uniform Force	Global Y	0.0180		0.0000	1.0000
139	Uniform Force	Global Y	0.0180		0.0000	1.0000

LOAD CASE WS -45 deg 70mph, Member Loads

Member	Type	Direction	Magnitude at Start (kips or kips-ft)	Magnitude at End (kips or kips-ft)	Start Position (x/L)	End Position from start (x/L)
140	Uniform Force	Global Y	0.0180		0.0000	1.0000
141	Uniform Force	Global Y	0.0180		0.0000	1.0000
142	Uniform Force	Global Y	0.0180		0.0000	1.0000
143	Uniform Force	Global Y	0.0180		0.0000	1.0000
144	Uniform Force	Global Y	0.0180		0.0000	1.0000
145	Uniform Force	Global Y	0.0180		0.0000	1.0000
146	Uniform Force	Global Y	0.0180		0.0000	1.0000
147	Uniform Force	Global Y	0.0180		0.0000	1.0000
148	Uniform Force	Global Y	0.0180		0.0000	1.0000
149	Uniform Force	Global Y	0.0180		0.0000	1.0000
150	Uniform Force	Global Y	0.0180		0.0000	1.0000
151	Uniform Force	Global Y	0.0180		0.0000	1.0000
152	Uniform Force	Global Y	0.0180		0.0000	1.0000
153	Uniform Force	Global Y	0.0180		0.0000	1.0000
154	Uniform Force	Global Y	0.0180		0.0000	1.0000
155	Uniform Force	Global Y	0.0180		0.0000	1.0000
156	Uniform Force	Global Y	0.0180		0.0000	1.0000
157	Uniform Force	Global Y	0.0180		0.0000	1.0000
158	Uniform Force	Global Y	0.0180		0.0000	1.0000
159	Uniform Force	Global Y	0.0180		0.0000	1.0000
160	Uniform Force	Global Y	0.0180		0.0000	1.0000
701	Uniform Force	Global Y	0.0170		0.0000	1.0000
702	Uniform Force	Global Y	0.0170		0.0000	1.0000
703	Uniform Force	Global Y	0.0170		0.0000	1.0000
704	Uniform Force	Global Y	0.0170		0.0000	1.0000
705	Uniform Force	Global Y	0.0170		0.0000	1.0000
706	Uniform Force	Global Y	0.0170		0.0000	1.0000
707	Uniform Force	Global Y	0.0170		0.0000	1.0000
708	Uniform Force	Global Y	0.0170		0.0000	1.0000
709	Uniform Force	Global Y	0.0170		0.0000	1.0000
710	Uniform Force	Global Y	0.0170		0.0000	1.0000
711	Uniform Force	Global Y	0.0170		0.0000	1.0000
712	Uniform Force	Global Y	0.0170		0.0000	1.0000
713	Uniform Force	Global Y	0.0170		0.0000	1.0000

LOAD CASE WS -45 deg 70mph, Member Loads

Member	Type	Direction	Magnitude at Start (kips or kips-ft)	Magnitude at End (kips or kips-ft)	Start Position (x/L)	End Position from start (x/L)
714	Uniform Force	Global Y	0.0170		0.0000	1.0000
715	Uniform Force	Global Y	0.0170		0.0000	1.0000
716	Uniform Force	Global Y	0.0170		0.0000	1.0000
717	Uniform Force	Global Y	0.0170		0.0000	1.0000
718	Uniform Force	Global Y	0.0170		0.0000	1.0000
719	Uniform Force	Global Y	0.0170		0.0000	1.0000
720	Uniform Force	Global Y	0.0170		0.0000	1.0000
721	Uniform Force	Global Y	0.0170		0.0000	1.0000
722	Uniform Force	Global Y	0.0170		0.0000	1.0000
723	Uniform Force	Global Y	0.0170		0.0000	1.0000
724	Uniform Force	Global Y	0.0170		0.0000	1.0000
725	Uniform Force	Global Y	0.0170		0.0000	1.0000
726	Uniform Force	Global Y	0.0170		0.0000	1.0000
727	Uniform Force	Global Y	0.0170		0.0000	1.0000
728	Uniform Force	Global Y	0.0170		0.0000	1.0000
729	Uniform Force	Global Y	0.0170		0.0000	1.0000
730	Uniform Force	Global Y	0.0170		0.0000	1.0000
731	Uniform Force	Global Y	0.0170		0.0000	1.0000
732	Uniform Force	Global Y	0.0170		0.0000	1.0000
733	Uniform Force	Global Y	0.0170		0.0000	1.0000
740	Uniform Force	Global Y	0.0170		0.0000	1.0000
741	Uniform Force	Global Y	0.0170		0.0000	1.0000
742	Uniform Force	Global Y	0.0170		0.0000	1.0000
743	Uniform Force	Global Y	0.0170		0.0000	1.0000
744	Uniform Force	Global Y	0.0170		0.0000	1.0000
745	Uniform Force	Global Y	0.0170		0.0000	1.0000
746	Uniform Force	Global Y	0.0170		0.0000	1.0000
747	Uniform Force	Global Y	0.0170		0.0000	1.0000
748	Uniform Force	Global Y	0.0170		0.0000	1.0000
749	Uniform Force	Global Y	0.0170		0.0000	1.0000
750	Uniform Force	Global Y	0.0170		0.0000	1.0000
751	Uniform Force	Global Y	0.0170		0.0000	1.0000
752	Uniform Force	Global Y	0.0170		0.0000	1.0000
753	Uniform Force	Global Y	0.0170		0.0000	1.0000

LOAD CASE WS -45 deg 70mph, Member Loads

Member	Type	Direction	Magnitude at Start (kips or kips-ft)	Magnitude at End (kips or kips-ft)	Start Position (x/L)	End Position from start (x/L)
754	Uniform Force	Global Y	0.0170		0.0000	1.0000
755	Uniform Force	Global Y	0.0170		0.0000	1.0000
756	Uniform Force	Global Y	0.0170		0.0000	1.0000
757	Uniform Force	Global Y	0.0170		0.0000	1.0000
758	Uniform Force	Global Y	0.0170		0.0000	1.0000
759	Uniform Force	Global Y	0.0170		0.0000	1.0000
760	Uniform Force	Global Y	0.0170		0.0000	1.0000
761	Uniform Force	Global Y	0.0170		0.0000	1.0000
762	Uniform Force	Global Y	0.0170		0.0000	1.0000
763	Uniform Force	Global Y	0.0170		0.0000	1.0000
764	Uniform Force	Global Y	0.0170		0.0000	1.0000
765	Uniform Force	Global Y	0.0170		0.0000	1.0000
766	Uniform Force	Global Y	0.0170		0.0000	1.0000
767	Uniform Force	Global Y	0.0170		0.0000	1.0000
768	Uniform Force	Global Y	0.0170		0.0000	1.0000
769	Uniform Force	Global Y	0.0170		0.0000	1.0000
770	Uniform Force	Global Y	0.0170		0.0000	1.0000
771	Uniform Force	Global Y	0.0170		0.0000	1.0000
772	Uniform Force	Global Y	0.0170		0.0000	1.0000
1	Uniform Moment	Local x	-0.6000		0.0000	1.0000
2	Uniform Moment	Local x	-0.6000		0.0000	1.0000
3	Uniform Moment	Local x	-0.6000		0.0000	1.0000
4	Uniform Moment	Local x	-0.6000		0.0000	1.0000
5	Uniform Moment	Local x	-0.6000		0.0000	1.0000
6	Uniform Moment	Local x	-0.6000		0.0000	1.0000
7	Uniform Moment	Local x	-0.6000		0.0000	1.0000
8	Uniform Moment	Local x	-0.6000		0.0000	1.0000
9	Uniform Moment	Local x	-0.6000		0.0000	1.0000
10	Uniform Moment	Local x	-0.6000		0.0000	1.0000
11	Uniform Moment	Local x	-0.6000		0.0000	1.0000
12	Uniform Moment	Local x	-0.6000		0.0000	1.0000
13	Uniform Moment	Local x	-0.6000		0.0000	1.0000
14	Uniform Moment	Local x	-0.6000		0.0000	1.0000
15	Uniform Moment	Local x	-0.6000		0.0000	1.0000

LOAD CASE WS -45 deg 70mph, Member Loads

Member	Type	Direction	Magnitude at Start (kips or kips-ft)	Magnitude at End (kips or kips-ft)	Start Position (x/L)	End Position from start (x/L)
16	Uniform Moment	Local x	-0.6000		0.0000	1.0000
17	Uniform Moment	Local x	-0.6000		0.0000	1.0000
18	Uniform Moment	Local x	-0.6000		0.0000	1.0000
19	Uniform Moment	Local x	-0.6000		0.0000	1.0000
20	Uniform Moment	Local x	-0.6000		0.0000	1.0000
21	Uniform Moment	Local x	-0.6000		0.0000	1.0000
22	Uniform Moment	Local x	-0.6000		0.0000	1.0000
23	Uniform Moment	Local x	-0.6000		0.0000	1.0000
24	Uniform Moment	Local x	-0.6000		0.0000	1.0000
25	Uniform Moment	Local x	-0.6000		0.0000	1.0000
26	Uniform Moment	Local x	-0.6000		0.0000	1.0000
27	Uniform Moment	Local x	-0.6000		0.0000	1.0000
28	Uniform Moment	Local x	-0.6000		0.0000	1.0000
29	Uniform Moment	Local x	-0.6000		0.0000	1.0000
30	Uniform Moment	Local x	-0.6000		0.0000	1.0000
31	Uniform Moment	Local x	-0.6000		0.0000	1.0000
32	Uniform Moment	Local x	-0.6000		0.0000	1.0000
33	Uniform Moment	Local x	-0.6000		0.0000	1.0000
34	Uniform Moment	Local x	-0.6000		0.0000	1.0000
35	Uniform Moment	Local x	-0.6000		0.0000	1.0000
36	Uniform Moment	Local x	-0.6000		0.0000	1.0000
37	Uniform Moment	Local x	-0.6000		0.0000	1.0000
38	Uniform Moment	Local x	-0.6000		0.0000	1.0000
39	Uniform Moment	Local x	-0.6000		0.0000	1.0000
40	Uniform Moment	Local x	-0.6000		0.0000	1.0000
41	Uniform Moment	Local x	-0.6000		0.0000	1.0000
42	Uniform Moment	Local x	-0.6000		0.0000	1.0000
43	Uniform Moment	Local x	-0.6000		0.0000	1.0000
44	Uniform Moment	Local x	-0.6000		0.0000	1.0000
45	Uniform Moment	Local x	-0.6000		0.0000	1.0000
46	Uniform Moment	Local x	-0.6000		0.0000	1.0000
47	Uniform Moment	Local x	-0.6000		0.0000	1.0000
48	Uniform Moment	Local x	-0.6000		0.0000	1.0000
49	Uniform Moment	Local x	-0.6000		0.0000	1.0000

LOAD CASE WS -45 deg 70mph, Member Loads

Member	Type	Direction	Magnitude at Start (kips or kips-ft)	Magnitude at End (kips or kips-ft)	Start Position (x/L)	End Position from start (x/L)
50	Uniform Moment	Local x	-0.6000		0.0000	1.0000
51	Uniform Moment	Local x	-0.6000		0.0000	1.0000
52	Uniform Moment	Local x	-0.6000		0.0000	1.0000
53	Uniform Moment	Local x	-0.6000		0.0000	1.0000
54	Uniform Moment	Local x	-0.6000		0.0000	1.0000
55	Uniform Moment	Local x	-0.6000		0.0000	1.0000
56	Uniform Moment	Local x	-0.6000		0.0000	1.0000
57	Uniform Moment	Local x	-0.6000		0.0000	1.0000
1	Uniform Force	Local x	-0.1500		0.0000	1.0000
2	Uniform Force	Local x	-0.1500		0.0000	1.0000
3	Uniform Force	Local x	-0.1500		0.0000	1.0000
4	Uniform Force	Local x	-0.1500		0.0000	1.0000
5	Uniform Force	Local x	-0.1500		0.0000	1.0000
6	Uniform Force	Local x	-0.1500		0.0000	1.0000
7	Uniform Force	Local x	-0.1500		0.0000	1.0000
8	Uniform Force	Local x	-0.1500		0.0000	1.0000
9	Uniform Force	Local x	-0.1500		0.0000	1.0000
10	Uniform Force	Local x	-0.1500		0.0000	1.0000
11	Uniform Force	Local x	-0.1500		0.0000	1.0000
12	Uniform Force	Local x	-0.1500		0.0000	1.0000
13	Uniform Force	Local x	-0.1500		0.0000	1.0000
14	Uniform Force	Local x	-0.1500		0.0000	1.0000
15	Uniform Force	Local x	-0.1500		0.0000	1.0000
16	Uniform Force	Local x	-0.1500		0.0000	1.0000
17	Uniform Force	Local x	-0.1500		0.0000	1.0000
18	Uniform Force	Local x	-0.1500		0.0000	1.0000
19	Uniform Force	Local x	-0.1500		0.0000	1.0000
20	Uniform Force	Local x	-0.1500		0.0000	1.0000
21	Uniform Force	Local x	-0.1500		0.0000	1.0000
22	Uniform Force	Local x	-0.1500		0.0000	1.0000
23	Uniform Force	Local x	-0.1500		0.0000	1.0000
24	Uniform Force	Local x	-0.1500		0.0000	1.0000
25	Uniform Force	Local x	-0.1500		0.0000	1.0000
26	Uniform Force	Local x	-0.1500		0.0000	1.0000

LOAD CASE WS -45 deg 70mph, Member Loads

Member	Type	Direction	Magnitude at Start (kips or kips-ft)	Magnitude at End (kips or kips-ft)	Start Position (x/L)	End Position from start (x/L)
27	Uniform Force	Local x	-0.1500		0.0000	1.0000
28	Uniform Force	Local x	-0.1500		0.0000	1.0000
29	Uniform Force	Local x	-0.1500		0.0000	1.0000
30	Uniform Force	Local x	-0.1500		0.0000	1.0000
31	Uniform Force	Local x	-0.1500		0.0000	1.0000
32	Uniform Force	Local x	-0.1500		0.0000	1.0000
33	Uniform Force	Local x	-0.1500		0.0000	1.0000
34	Uniform Force	Local x	-0.1500		0.0000	1.0000
35	Uniform Force	Local x	-0.1500		0.0000	1.0000
36	Uniform Force	Local x	-0.1500		0.0000	1.0000
37	Uniform Force	Local x	-0.1500		0.0000	1.0000
38	Uniform Force	Local x	-0.1500		0.0000	1.0000
39	Uniform Force	Local x	-0.1500		0.0000	1.0000
40	Uniform Force	Local x	-0.1500		0.0000	1.0000
41	Uniform Force	Local x	-0.1500		0.0000	1.0000
42	Uniform Force	Local x	-0.1500		0.0000	1.0000
43	Uniform Force	Local x	-0.1500		0.0000	1.0000
44	Uniform Force	Local x	-0.1500		0.0000	1.0000
45	Uniform Force	Local x	-0.1500		0.0000	1.0000
46	Uniform Force	Local x	-0.1500		0.0000	1.0000
47	Uniform Force	Local x	-0.1500		0.0000	1.0000
48	Uniform Force	Local x	-0.1500		0.0000	1.0000
49	Uniform Force	Local x	-0.1500		0.0000	1.0000
50	Uniform Force	Local x	-0.1500		0.0000	1.0000
51	Uniform Force	Local x	-0.1500		0.0000	1.0000
52	Uniform Force	Local x	-0.1500		0.0000	1.0000
53	Uniform Force	Local x	-0.1500		0.0000	1.0000
54	Uniform Force	Local x	-0.1500		0.0000	1.0000
55	Uniform Force	Local x	-0.1500		0.0000	1.0000
56	Uniform Force	Local x	-0.1500		0.0000	1.0000
57	Uniform Force	Local x	-0.1500		0.0000	1.0000
101	Uniform Force	Local x	-0.0160		0.0000	1.0000
102	Uniform Force	Local x	-0.0160		0.0000	1.0000
103	Uniform Force	Local x	-0.0160		0.0000	1.0000

LOAD CASE WS -45 deg 70mph, Member Loads

Member	Type	Direction	Magnitude at Start (kips or kips-ft)	Magnitude at End (kips or kips-ft)	Start Position (x/L)	End Position from start (x/L)
104	Uniform Force	Local x	-0.0160		0.0000	1.0000
105	Uniform Force	Local x	-0.0160		0.0000	1.0000
106	Uniform Force	Local x	-0.0160		0.0000	1.0000
107	Uniform Force	Local x	-0.0160		0.0000	1.0000
108	Uniform Force	Local x	-0.0160		0.0000	1.0000
109	Uniform Force	Local x	-0.0160		0.0000	1.0000
110	Uniform Force	Local x	-0.0160		0.0000	1.0000
111	Uniform Force	Local x	-0.0160		0.0000	1.0000
112	Uniform Force	Local x	-0.0160		0.0000	1.0000
113	Uniform Force	Local x	-0.0160		0.0000	1.0000
114	Uniform Force	Local x	-0.0160		0.0000	1.0000
115	Uniform Force	Local x	-0.0160		0.0000	1.0000
116	Uniform Force	Local x	-0.0160		0.0000	1.0000
117	Uniform Force	Local x	-0.0160		0.0000	1.0000
118	Uniform Force	Local x	-0.0160		0.0000	1.0000
119	Uniform Force	Local x	-0.0160		0.0000	1.0000
120	Uniform Force	Local x	-0.0160		0.0000	1.0000
121	Uniform Force	Local x	-0.0160		0.0000	1.0000
122	Uniform Force	Local x	-0.0160		0.0000	1.0000
123	Uniform Force	Local x	-0.0160		0.0000	1.0000
124	Uniform Force	Local x	-0.0160		0.0000	1.0000
125	Uniform Force	Local x	-0.0160		0.0000	1.0000
126	Uniform Force	Local x	-0.0160		0.0000	1.0000
127	Uniform Force	Local x	-0.0160		0.0000	1.0000
128	Uniform Force	Local x	-0.0160		0.0000	1.0000
129	Uniform Force	Local x	-0.0160		0.0000	1.0000
130	Uniform Force	Local x	-0.0160		0.0000	1.0000
131	Uniform Force	Local x	-0.0160		0.0000	1.0000
132	Uniform Force	Local x	-0.0160		0.0000	1.0000
133	Uniform Force	Local x	-0.0160		0.0000	1.0000
134	Uniform Force	Local x	-0.0160		0.0000	1.0000
135	Uniform Force	Local x	-0.0160		0.0000	1.0000
136	Uniform Force	Local x	-0.0160		0.0000	1.0000
137	Uniform Force	Local x	-0.0160		0.0000	1.0000

LOAD CASE WS -45 deg 70mph, Member Loads

Member	Type	Direction	Magnitude at Start (kips or kips-ft)	Magnitude at End (kips or kips-ft)	Start Position (x/L)	End Position from start (x/L)
138	Uniform Force	Local x	-0.0160		0.0000	1.0000
139	Uniform Force	Local x	-0.0160		0.0000	1.0000
140	Uniform Force	Local x	-0.0160		0.0000	1.0000
141	Uniform Force	Local x	-0.0160		0.0000	1.0000
142	Uniform Force	Local x	-0.0160		0.0000	1.0000
143	Uniform Force	Local x	-0.0160		0.0000	1.0000
144	Uniform Force	Local x	-0.0160		0.0000	1.0000
145	Uniform Force	Local x	-0.0160		0.0000	1.0000
146	Uniform Force	Local x	-0.0160		0.0000	1.0000
147	Uniform Force	Local x	-0.0160		0.0000	1.0000
148	Uniform Force	Local x	-0.0160		0.0000	1.0000
149	Uniform Force	Local x	-0.0160		0.0000	1.0000
150	Uniform Force	Local x	-0.0160		0.0000	1.0000
151	Uniform Force	Local x	-0.0160		0.0000	1.0000
152	Uniform Force	Local x	-0.0160		0.0000	1.0000
153	Uniform Force	Local x	-0.0160		0.0000	1.0000
154	Uniform Force	Local x	-0.0160		0.0000	1.0000
155	Uniform Force	Local x	-0.0160		0.0000	1.0000
156	Uniform Force	Local x	-0.0160		0.0000	1.0000
157	Uniform Force	Local x	-0.0160		0.0000	1.0000
158	Uniform Force	Local x	-0.0160		0.0000	1.0000
159	Uniform Force	Local x	-0.0160		0.0000	1.0000
160	Uniform Force	Local x	-0.0160		0.0000	1.0000
701	Uniform Force	Global X	-0.0150		0.0000	1.0000
702	Uniform Force	Global X	-0.0150		0.0000	1.0000
703	Uniform Force	Global X	-0.0150		0.0000	1.0000
704	Uniform Force	Global X	-0.0150		0.0000	1.0000
705	Uniform Force	Global X	-0.0150		0.0000	1.0000
706	Uniform Force	Global X	-0.0150		0.0000	1.0000
707	Uniform Force	Global X	-0.0150		0.0000	1.0000
708	Uniform Force	Global X	-0.0150		0.0000	1.0000
709	Uniform Force	Global X	-0.0150		0.0000	1.0000
710	Uniform Force	Global X	-0.0150		0.0000	1.0000
711	Uniform Force	Global X	-0.0150		0.0000	1.0000

LOAD CASE WS -45 deg 70mph, Member Loads

Member	Type	Direction	Magnitude at Start (kips or kips-ft)	Magnitude at End (kips or kips-ft)	Start Position (x/L)	End Position from start (x/L)
712	Uniform Force	Global X	-0.0150		0.0000	1.0000
713	Uniform Force	Global X	-0.0150		0.0000	1.0000
714	Uniform Force	Global X	-0.0150		0.0000	1.0000
715	Uniform Force	Global X	-0.0150		0.0000	1.0000
716	Uniform Force	Global X	-0.0150		0.0000	1.0000
717	Uniform Force	Global X	-0.0150		0.0000	1.0000
718	Uniform Force	Global X	-0.0150		0.0000	1.0000
719	Uniform Force	Global X	-0.0150		0.0000	1.0000
720	Uniform Force	Global X	-0.0150		0.0000	1.0000
721	Uniform Force	Global X	-0.0150		0.0000	1.0000
722	Uniform Force	Global X	-0.0150		0.0000	1.0000
723	Uniform Force	Global X	-0.0150		0.0000	1.0000
724	Uniform Force	Global X	-0.0150		0.0000	1.0000
725	Uniform Force	Global X	-0.0150		0.0000	1.0000
726	Uniform Force	Global X	-0.0150		0.0000	1.0000
727	Uniform Force	Global X	-0.0150		0.0000	1.0000
728	Uniform Force	Global X	-0.0150		0.0000	1.0000
729	Uniform Force	Global X	-0.0150		0.0000	1.0000
730	Uniform Force	Global X	-0.0150		0.0000	1.0000
731	Uniform Force	Global X	-0.0150		0.0000	1.0000
732	Uniform Force	Global X	-0.0150		0.0000	1.0000
733	Uniform Force	Global X	-0.0150		0.0000	1.0000
740	Uniform Force	Global X	-0.0150		0.0000	1.0000
741	Uniform Force	Global X	-0.0150		0.0000	1.0000
742	Uniform Force	Global X	-0.0150		0.0000	1.0000
743	Uniform Force	Global X	-0.0150		0.0000	1.0000
744	Uniform Force	Global X	-0.0150		0.0000	1.0000
745	Uniform Force	Global X	-0.0150		0.0000	1.0000
746	Uniform Force	Global X	-0.0150		0.0000	1.0000
747	Uniform Force	Global X	-0.0150		0.0000	1.0000
748	Uniform Force	Global X	-0.0150		0.0000	1.0000
749	Uniform Force	Global X	-0.0150		0.0000	1.0000
750	Uniform Force	Global X	-0.0150		0.0000	1.0000
751	Uniform Force	Global X	-0.0150		0.0000	1.0000

LOAD CASE WS -45 deg 70mph, Member Loads

Member	Type	Direction	Magnitude at Start (kips or kips-ft)	Magnitude at End (kips or kips-ft)	Start Position (x/L)	End Position from start (x/L)
752	Uniform Force	Global X	-0.0150		0.0000	1.0000
753	Uniform Force	Global X	-0.0150		0.0000	1.0000
754	Uniform Force	Global X	-0.0150		0.0000	1.0000
755	Uniform Force	Global X	-0.0150		0.0000	1.0000
756	Uniform Force	Global X	-0.0150		0.0000	1.0000
757	Uniform Force	Global X	-0.0150		0.0000	1.0000
758	Uniform Force	Global X	-0.0150		0.0000	1.0000
759	Uniform Force	Global X	-0.0150		0.0000	1.0000
760	Uniform Force	Global X	-0.0150		0.0000	1.0000
761	Uniform Force	Global X	-0.0150		0.0000	1.0000
762	Uniform Force	Global X	-0.0150		0.0000	1.0000
763	Uniform Force	Global X	-0.0150		0.0000	1.0000
764	Uniform Force	Global X	-0.0150		0.0000	1.0000
765	Uniform Force	Global X	-0.0150		0.0000	1.0000
766	Uniform Force	Global X	-0.0150		0.0000	1.0000
767	Uniform Force	Global X	-0.0150		0.0000	1.0000
768	Uniform Force	Global X	-0.0150		0.0000	1.0000
769	Uniform Force	Global X	-0.0150		0.0000	1.0000
770	Uniform Force	Global X	-0.0150		0.0000	1.0000
771	Uniform Force	Global X	-0.0150		0.0000	1.0000
772	Uniform Force	Global X	-0.0150		0.0000	1.0000
2002	Uniform Force	Global Y	0.0600		0.0000	1.0000
2003	Uniform Force	Global Y	0.0600		0.0000	1.0000
2002	Trapezoidal Force	Global X	-0.1800	-0.1400	0.0000	1.0000
2003	Trapezoidal Force	Global X	-0.1400	-0.1000	0.0000	1.0000
1017	Uniform Force	Global Y	0.0500		0.0000	1.0000
1018	Uniform Force	Global Y	0.0500		0.0000	1.0000
1019	Uniform Force	Global Y	0.0500		0.0000	1.0000
1017	Uniform Force	Global X	-0.0200		0.0000	1.0000
1018	Uniform Force	Global X	-0.0200		0.0000	1.0000
1019	Uniform Force	Global X	-0.0200		0.0000	1.0000
1013	Uniform Force	Global Y	0.0500		0.0000	1.0000
1014	Uniform Force	Global Y	0.0500		0.0000	1.0000
1015	Uniform Force	Global Y	0.0500		0.0000	1.0000

LOAD CASE WS -45 deg 70mph, Member Loads

Member	Type	Direction	Magnitude at Start (kips or kips-ft)	Magnitude at End (kips or kips-ft)	Start Position (x/L)	End Position from start (x/L)
1013	Uniform Force	Global X	-0.0200		0.0000	1.0000
1014	Uniform Force	Global X	-0.0200		0.0000	1.0000
1015	Uniform Force	Global X	-0.0200		0.0000	1.0000
3017	Uniform Force	Global Y	0.0500		0.0000	1.0000
3018	Uniform Force	Global Y	0.0500		0.0000	1.0000
3019	Uniform Force	Global Y	0.0500		0.0000	1.0000
3017	Uniform Force	Global X	-0.0200		0.0000	1.0000
3018	Uniform Force	Global X	-0.0200		0.0000	1.0000
3019	Uniform Force	Global X	-0.0200		0.0000	1.0000
3013	Uniform Force	Global Y	0.0500		0.0000	1.0000
3014	Uniform Force	Global Y	0.0500		0.0000	1.0000
3015	Uniform Force	Global Y	0.0500		0.0000	1.0000
3013	Uniform Force	Global X	-0.0200		0.0000	1.0000
3014	Uniform Force	Global X	-0.0200		0.0000	1.0000
3015	Uniform Force	Global X	-0.0200		0.0000	1.0000
1006	Uniform Force	Global X	-0.0500		0.0000	1.0000
1007	Uniform Force	Global X	-0.0500		0.0000	1.0000
1008	Uniform Force	Global X	-0.0500		0.0000	1.0000
1009	Uniform Force	Global X	-0.0500		0.0000	1.0000
1010	Uniform Force	Global X	-0.0500		0.0000	1.0000
1011	Uniform Force	Global X	-0.0500		0.0000	1.0000
1012	Uniform Force	Global X	-0.0500		0.0000	1.0000
3006	Uniform Force	Global X	-0.0500		0.0000	1.0000
3007	Uniform Force	Global X	-0.0500		0.0000	1.0000
3008	Uniform Force	Global X	-0.0500		0.0000	1.0000
3009	Uniform Force	Global X	-0.0500		0.0000	1.0000
3010	Uniform Force	Global X	-0.0500		0.0000	1.0000
3011	Uniform Force	Global X	-0.0500		0.0000	1.0000
3012	Uniform Force	Global X	-0.0500		0.0000	1.0000
501	Uniform Force	Global Y	0.0150		0.0000	1.0000
502	Uniform Force	Global Y	0.0150		0.0000	1.0000
503	Uniform Force	Global Y	0.0150		0.0000	1.0000
504	Uniform Force	Global Y	0.0150		0.0000	1.0000
505	Uniform Force	Global Y	0.0150		0.0000	1.0000

LOAD CASE WS -45 deg 70mph, Member Loads

Member	Type	Direction	Magnitude at Start (kips or kips-ft)	Magnitude at End (kips or kips-ft)	Start Position (x/L)	End Position from start (x/L)
601	Uniform Force	Global Y	0.0150		0.0000	1.0000
602	Uniform Force	Global Y	0.0150		0.0000	1.0000
603	Uniform Force	Global Y	0.0150		0.0000	1.0000
604	Uniform Force	Global Y	0.0150		0.0000	1.0000
605	Uniform Force	Global Y	0.0150		0.0000	1.0000
401	Uniform Force	Global Y	0.0600		0.0000	1.0000
402	Uniform Force	Global Y	0.0600		0.0000	1.0000
403	Uniform Force	Global Y	0.0600		0.0000	1.0000
405	Trapezoidal Force	Global Y	0.0800	0.0700	0.0000	1.0000
406	Trapezoidal Force	Global Y	0.0700	0.0700	0.0000	1.0000
407	Trapezoidal Force	Global Y	0.0700	0.0700	0.0000	1.0000
408	Trapezoidal Force	Global Y	0.0700	0.0600	0.0000	1.0000
409	Trapezoidal Force	Global Y	0.0600	0.0600	0.0000	1.0000
410	Trapezoidal Force	Global Y	0.0600	0.0600	0.0000	1.0000
411	Trapezoidal Force	Global Y	0.0600	0.0500	0.0000	1.0000
412	Trapezoidal Force	Global Y	0.0500	0.0500	0.0000	1.0000
413	Trapezoidal Force	Global Y	0.0500	0.0500	0.0000	1.0000
501	Uniform Force	Global X	-0.0150		0.0000	1.0000
502	Uniform Force	Global X	-0.0150		0.0000	1.0000
503	Uniform Force	Global X	-0.0150		0.0000	1.0000
504	Uniform Force	Global X	-0.0150		0.0000	1.0000
505	Uniform Force	Global X	-0.0150		0.0000	1.0000
601	Uniform Force	Global X	-0.0150		0.0000	1.0000
602	Uniform Force	Global X	-0.0150		0.0000	1.0000
603	Uniform Force	Global X	-0.0150		0.0000	1.0000
604	Uniform Force	Global X	-0.0150		0.0000	1.0000
605	Uniform Force	Global X	-0.0150		0.0000	1.0000
401	Uniform Force	Global X	-0.0500		0.0000	1.0000
402	Uniform Force	Global X	-0.0500		0.0000	1.0000
403	Uniform Force	Global X	-0.0500		0.0000	1.0000
405	Trapezoidal Force	Global X	-0.0800	-0.0700	0.0000	1.0000
406	Trapezoidal Force	Global X	-0.0700	-0.0700	0.0000	1.0000
407	Trapezoidal Force	Global X	-0.0700	-0.0700	0.0000	1.0000
408	Trapezoidal Force	Global X	-0.0700	-0.0600	0.0000	1.0000

LOAD CASE WS -45 deg 70mph, Member Loads

Member	Type	Direction	Magnitude at Start (kips or kips-ft)	Magnitude at End (kips or kips-ft)	Start Position (x/L)	End Position from start (x/L)
409	Trapezoidal Force	Global X	-0.0600	-0.0600	0.0000	1.0000
410	Trapezoidal Force	Global X	-0.0600	-0.0600	0.0000	1.0000
411	Trapezoidal Force	Global X	-0.0600	-0.0500	0.0000	1.0000
412	Trapezoidal Force	Global X	-0.0500	-0.0500	0.0000	1.0000
413	Trapezoidal Force	Global X	-0.0500	-0.0500	0.0000	1.0000

LOAD CASE WS_-30 deg_70mph, Member Loads

Member	Type	Direction	Magnitude at Start (kips or kips-ft)	Magnitude at End (kips or kips-ft)	Start Position (x/L)	End Position from start (x/L)
1	Uniform Force	Global Y	0.2400		0.0000	1.0000
2	Uniform Force	Global Y	0.2400		0.0000	1.0000
3	Uniform Force	Global Y	0.2400		0.0000	1.0000
4	Uniform Force	Global Y	0.2400		0.0000	1.0000
5	Uniform Force	Global Y	0.2400		0.0000	1.0000
6	Uniform Force	Global Y	0.2400		0.0000	1.0000
7	Uniform Force	Global Y	0.2400		0.0000	1.0000
8	Uniform Force	Global Y	0.2400		0.0000	1.0000
9	Uniform Force	Global Y	0.2400		0.0000	1.0000
10	Uniform Force	Global Y	0.2400		0.0000	1.0000
11	Uniform Force	Global Y	0.2400		0.0000	1.0000
12	Uniform Force	Global Y	0.2400		0.0000	1.0000
13	Uniform Force	Global Y	0.2400		0.0000	1.0000
14	Uniform Force	Global Y	0.2400		0.0000	1.0000
15	Uniform Force	Global Y	0.2400		0.0000	1.0000
16	Uniform Force	Global Y	0.2400		0.0000	1.0000
17	Uniform Force	Global Y	0.2400		0.0000	1.0000
18	Uniform Force	Global Y	0.2400		0.0000	1.0000
19	Uniform Force	Global Y	0.2400		0.0000	1.0000
20	Uniform Force	Global Y	0.2400		0.0000	1.0000
21	Uniform Force	Global Y	0.2400		0.0000	1.0000
22	Uniform Force	Global Y	0.2400		0.0000	1.0000
23	Uniform Force	Global Y	0.2400		0.0000	1.0000
24	Uniform Force	Global Y	0.2400		0.0000	1.0000

LOAD CASE WS -30 deg 70mph, Member Loads

Member	Type	Direction	Magnitude at Start (kips or kips-ft)	Magnitude at End (kips or kips-ft)	Start Position (x/L)	End Position from start (x/L)
25	Uniform Force	Global Y	0.2400		0.0000	1.0000
26	Uniform Force	Global Y	0.2400		0.0000	1.0000
27	Uniform Force	Global Y	0.2400		0.0000	1.0000
28	Uniform Force	Global Y	0.2400		0.0000	1.0000
29	Uniform Force	Global Y	0.2400		0.0000	1.0000
30	Uniform Force	Global Y	0.2400		0.0000	1.0000
31	Uniform Force	Global Y	0.2400		0.0000	1.0000
32	Uniform Force	Global Y	0.2400		0.0000	1.0000
33	Uniform Force	Global Y	0.2400		0.0000	1.0000
34	Uniform Force	Global Y	0.2400		0.0000	1.0000
35	Uniform Force	Global Y	0.2400		0.0000	1.0000
36	Uniform Force	Global Y	0.2400		0.0000	1.0000
37	Uniform Force	Global Y	0.2400		0.0000	1.0000
38	Uniform Force	Global Y	0.2400		0.0000	1.0000
39	Uniform Force	Global Y	0.2400		0.0000	1.0000
40	Uniform Force	Global Y	0.2400		0.0000	1.0000
41	Uniform Force	Global Y	0.2400		0.0000	1.0000
42	Uniform Force	Global Y	0.2400		0.0000	1.0000
43	Uniform Force	Global Y	0.2400		0.0000	1.0000
44	Uniform Force	Global Y	0.2400		0.0000	1.0000
45	Uniform Force	Global Y	0.2400		0.0000	1.0000
46	Uniform Force	Global Y	0.2400		0.0000	1.0000
47	Uniform Force	Global Y	0.2400		0.0000	1.0000
48	Uniform Force	Global Y	0.2400		0.0000	1.0000
49	Uniform Force	Global Y	0.2400		0.0000	1.0000
50	Uniform Force	Global Y	0.2400		0.0000	1.0000
51	Uniform Force	Global Y	0.2400		0.0000	1.0000
52	Uniform Force	Global Y	0.2400		0.0000	1.0000
53	Uniform Force	Global Y	0.2400		0.0000	1.0000
54	Uniform Force	Global Y	0.2400		0.0000	1.0000
55	Uniform Force	Global Y	0.2400		0.0000	1.0000
56	Uniform Force	Global Y	0.2400		0.0000	1.0000
57	Uniform Force	Global Y	0.2400		0.0000	1.0000
101	Uniform Force	Global Y	0.0250		0.0000	1.0000

LOAD CASE WS -30 deg 70mph, Member Loads

Member	Type	Direction	Magnitude at Start (kips or kips-ft)	Magnitude at End (kips or kips-ft)	Start Position (x/L)	End Position from start (x/L)
102	Uniform Force	Global Y	0.0250		0.0000	1.0000
103	Uniform Force	Global Y	0.0250		0.0000	1.0000
104	Uniform Force	Global Y	0.0250		0.0000	1.0000
105	Uniform Force	Global Y	0.0250		0.0000	1.0000
106	Uniform Force	Global Y	0.0250		0.0000	1.0000
107	Uniform Force	Global Y	0.0250		0.0000	1.0000
108	Uniform Force	Global Y	0.0250		0.0000	1.0000
109	Uniform Force	Global Y	0.0250		0.0000	1.0000
110	Uniform Force	Global Y	0.0250		0.0000	1.0000
111	Uniform Force	Global Y	0.0250		0.0000	1.0000
112	Uniform Force	Global Y	0.0250		0.0000	1.0000
113	Uniform Force	Global Y	0.0250		0.0000	1.0000
114	Uniform Force	Global Y	0.0250		0.0000	1.0000
115	Uniform Force	Global Y	0.0250		0.0000	1.0000
116	Uniform Force	Global Y	0.0250		0.0000	1.0000
117	Uniform Force	Global Y	0.0250		0.0000	1.0000
118	Uniform Force	Global Y	0.0250		0.0000	1.0000
119	Uniform Force	Global Y	0.0250		0.0000	1.0000
120	Uniform Force	Global Y	0.0250		0.0000	1.0000
121	Uniform Force	Global Y	0.0250		0.0000	1.0000
122	Uniform Force	Global Y	0.0250		0.0000	1.0000
123	Uniform Force	Global Y	0.0250		0.0000	1.0000
124	Uniform Force	Global Y	0.0250		0.0000	1.0000
125	Uniform Force	Global Y	0.0250		0.0000	1.0000
126	Uniform Force	Global Y	0.0250		0.0000	1.0000
127	Uniform Force	Global Y	0.0250		0.0000	1.0000
128	Uniform Force	Global Y	0.0250		0.0000	1.0000
129	Uniform Force	Global Y	0.0250		0.0000	1.0000
130	Uniform Force	Global Y	0.0250		0.0000	1.0000
131	Uniform Force	Global Y	0.0250		0.0000	1.0000
132	Uniform Force	Global Y	0.0250		0.0000	1.0000
133	Uniform Force	Global Y	0.0250		0.0000	1.0000
134	Uniform Force	Global Y	0.0250		0.0000	1.0000
135	Uniform Force	Global Y	0.0250		0.0000	1.0000

LOAD CASE WS -30 deg 70mph, Member Loads

Member	Type	Direction	Magnitude at Start (kips or kips-ft)	Magnitude at End (kips or kips-ft)	Start Position (x/L)	End Position from start (x/L)
136	Uniform Force	Global Y	0.0250		0.0000	1.0000
137	Uniform Force	Global Y	0.0250		0.0000	1.0000
138	Uniform Force	Global Y	0.0250		0.0000	1.0000
139	Uniform Force	Global Y	0.0250		0.0000	1.0000
140	Uniform Force	Global Y	0.0250		0.0000	1.0000
141	Uniform Force	Global Y	0.0250		0.0000	1.0000
142	Uniform Force	Global Y	0.0250		0.0000	1.0000
143	Uniform Force	Global Y	0.0250		0.0000	1.0000
144	Uniform Force	Global Y	0.0250		0.0000	1.0000
145	Uniform Force	Global Y	0.0250		0.0000	1.0000
146	Uniform Force	Global Y	0.0250		0.0000	1.0000
147	Uniform Force	Global Y	0.0250		0.0000	1.0000
148	Uniform Force	Global Y	0.0250		0.0000	1.0000
149	Uniform Force	Global Y	0.0250		0.0000	1.0000
150	Uniform Force	Global Y	0.0250		0.0000	1.0000
151	Uniform Force	Global Y	0.0250		0.0000	1.0000
152	Uniform Force	Global Y	0.0250		0.0000	1.0000
153	Uniform Force	Global Y	0.0250		0.0000	1.0000
154	Uniform Force	Global Y	0.0250		0.0000	1.0000
155	Uniform Force	Global Y	0.0250		0.0000	1.0000
156	Uniform Force	Global Y	0.0250		0.0000	1.0000
157	Uniform Force	Global Y	0.0250		0.0000	1.0000
158	Uniform Force	Global Y	0.0250		0.0000	1.0000
159	Uniform Force	Global Y	0.0250		0.0000	1.0000
160	Uniform Force	Global Y	0.0250		0.0000	1.0000
701	Uniform Force	Global Y	0.0240		0.0000	1.0000
702	Uniform Force	Global Y	0.0240		0.0000	1.0000
703	Uniform Force	Global Y	0.0240		0.0000	1.0000
704	Uniform Force	Global Y	0.0240		0.0000	1.0000
705	Uniform Force	Global Y	0.0240		0.0000	1.0000
706	Uniform Force	Global Y	0.0240		0.0000	1.0000
707	Uniform Force	Global Y	0.0240		0.0000	1.0000
708	Uniform Force	Global Y	0.0240		0.0000	1.0000
709	Uniform Force	Global Y	0.0240		0.0000	1.0000

LOAD CASE WS -30 deg 70mph, Member Loads

Member	Type	Direction	Magnitude at Start (kips or kips-ft)	Magnitude at End (kips or kips-ft)	Start Position (x/L)	End Position from start (x/L)
710	Uniform Force	Global Y	0.0240		0.0000	1.0000
711	Uniform Force	Global Y	0.0240		0.0000	1.0000
712	Uniform Force	Global Y	0.0240		0.0000	1.0000
713	Uniform Force	Global Y	0.0240		0.0000	1.0000
714	Uniform Force	Global Y	0.0240		0.0000	1.0000
715	Uniform Force	Global Y	0.0240		0.0000	1.0000
716	Uniform Force	Global Y	0.0240		0.0000	1.0000
717	Uniform Force	Global Y	0.0240		0.0000	1.0000
718	Uniform Force	Global Y	0.0240		0.0000	1.0000
719	Uniform Force	Global Y	0.0240		0.0000	1.0000
720	Uniform Force	Global Y	0.0240		0.0000	1.0000
721	Uniform Force	Global Y	0.0240		0.0000	1.0000
722	Uniform Force	Global Y	0.0240		0.0000	1.0000
723	Uniform Force	Global Y	0.0240		0.0000	1.0000
724	Uniform Force	Global Y	0.0240		0.0000	1.0000
725	Uniform Force	Global Y	0.0240		0.0000	1.0000
726	Uniform Force	Global Y	0.0240		0.0000	1.0000
727	Uniform Force	Global Y	0.0240		0.0000	1.0000
728	Uniform Force	Global Y	0.0240		0.0000	1.0000
729	Uniform Force	Global Y	0.0240		0.0000	1.0000
730	Uniform Force	Global Y	0.0240		0.0000	1.0000
731	Uniform Force	Global Y	0.0240		0.0000	1.0000
732	Uniform Force	Global Y	0.0240		0.0000	1.0000
733	Uniform Force	Global Y	0.0240		0.0000	1.0000
740	Uniform Force	Global Y	0.0240		0.0000	1.0000
741	Uniform Force	Global Y	0.0240		0.0000	1.0000
742	Uniform Force	Global Y	0.0240		0.0000	1.0000
743	Uniform Force	Global Y	0.0240		0.0000	1.0000
744	Uniform Force	Global Y	0.0240		0.0000	1.0000
745	Uniform Force	Global Y	0.0240		0.0000	1.0000
746	Uniform Force	Global Y	0.0240		0.0000	1.0000
747	Uniform Force	Global Y	0.0240		0.0000	1.0000
748	Uniform Force	Global Y	0.0240		0.0000	1.0000
749	Uniform Force	Global Y	0.0240		0.0000	1.0000

LOAD CASE WS -30 deg 70mph, Member Loads

Member	Type	Direction	Magnitude at Start (kips or kips-ft)	Magnitude at End (kips or kips-ft)	Start Position (x/L)	End Position from start (x/L)
750	Uniform Force	Global Y	0.0240		0.0000	1.0000
751	Uniform Force	Global Y	0.0240		0.0000	1.0000
752	Uniform Force	Global Y	0.0240		0.0000	1.0000
753	Uniform Force	Global Y	0.0240		0.0000	1.0000
754	Uniform Force	Global Y	0.0240		0.0000	1.0000
755	Uniform Force	Global Y	0.0240		0.0000	1.0000
756	Uniform Force	Global Y	0.0240		0.0000	1.0000
757	Uniform Force	Global Y	0.0240		0.0000	1.0000
758	Uniform Force	Global Y	0.0240		0.0000	1.0000
759	Uniform Force	Global Y	0.0240		0.0000	1.0000
760	Uniform Force	Global Y	0.0240		0.0000	1.0000
761	Uniform Force	Global Y	0.0240		0.0000	1.0000
762	Uniform Force	Global Y	0.0240		0.0000	1.0000
763	Uniform Force	Global Y	0.0240		0.0000	1.0000
764	Uniform Force	Global Y	0.0240		0.0000	1.0000
765	Uniform Force	Global Y	0.0240		0.0000	1.0000
766	Uniform Force	Global Y	0.0240		0.0000	1.0000
767	Uniform Force	Global Y	0.0240		0.0000	1.0000
768	Uniform Force	Global Y	0.0240		0.0000	1.0000
769	Uniform Force	Global Y	0.0240		0.0000	1.0000
770	Uniform Force	Global Y	0.0240		0.0000	1.0000
771	Uniform Force	Global Y	0.0240		0.0000	1.0000
772	Uniform Force	Global Y	0.0240		0.0000	1.0000
1	Uniform Moment	Local x	-0.8400		0.0000	1.0000
2	Uniform Moment	Local x	-0.8400		0.0000	1.0000
3	Uniform Moment	Local x	-0.8400		0.0000	1.0000
4	Uniform Moment	Local x	-0.8400		0.0000	1.0000
5	Uniform Moment	Local x	-0.8400		0.0000	1.0000
6	Uniform Moment	Local x	-0.8400		0.0000	1.0000
7	Uniform Moment	Local x	-0.8400		0.0000	1.0000
8	Uniform Moment	Local x	-0.8400		0.0000	1.0000
9	Uniform Moment	Local x	-0.8400		0.0000	1.0000
10	Uniform Moment	Local x	-0.8400		0.0000	1.0000
11	Uniform Moment	Local x	-0.8400		0.0000	1.0000

LOAD CASE WS -30 deg 70mph, Member Loads

Member	Type	Direction	Magnitude at Start (kips or kips-ft)	Magnitude at End (kips or kips-ft)	Start Position (x/L)	End Position from start (x/L)
12	Uniform Moment	Local x	-0.8400		0.0000	1.0000
13	Uniform Moment	Local x	-0.8400		0.0000	1.0000
14	Uniform Moment	Local x	-0.8400		0.0000	1.0000
15	Uniform Moment	Local x	-0.8400		0.0000	1.0000
16	Uniform Moment	Local x	-0.8400		0.0000	1.0000
17	Uniform Moment	Local x	-0.8400		0.0000	1.0000
18	Uniform Moment	Local x	-0.8400		0.0000	1.0000
19	Uniform Moment	Local x	-0.8400		0.0000	1.0000
20	Uniform Moment	Local x	-0.8400		0.0000	1.0000
21	Uniform Moment	Local x	-0.8400		0.0000	1.0000
22	Uniform Moment	Local x	-0.8400		0.0000	1.0000
23	Uniform Moment	Local x	-0.8400		0.0000	1.0000
24	Uniform Moment	Local x	-0.8400		0.0000	1.0000
25	Uniform Moment	Local x	-0.8400		0.0000	1.0000
26	Uniform Moment	Local x	-0.8400		0.0000	1.0000
27	Uniform Moment	Local x	-0.8400		0.0000	1.0000
28	Uniform Moment	Local x	-0.8400		0.0000	1.0000
29	Uniform Moment	Local x	-0.8400		0.0000	1.0000
30	Uniform Moment	Local x	-0.8400		0.0000	1.0000
31	Uniform Moment	Local x	-0.8400		0.0000	1.0000
32	Uniform Moment	Local x	-0.8400		0.0000	1.0000
33	Uniform Moment	Local x	-0.8400		0.0000	1.0000
34	Uniform Moment	Local x	-0.8400		0.0000	1.0000
35	Uniform Moment	Local x	-0.8400		0.0000	1.0000
36	Uniform Moment	Local x	-0.8400		0.0000	1.0000
37	Uniform Moment	Local x	-0.8400		0.0000	1.0000
38	Uniform Moment	Local x	-0.8400		0.0000	1.0000
39	Uniform Moment	Local x	-0.8400		0.0000	1.0000
40	Uniform Moment	Local x	-0.8400		0.0000	1.0000
41	Uniform Moment	Local x	-0.8400		0.0000	1.0000
42	Uniform Moment	Local x	-0.8400		0.0000	1.0000
43	Uniform Moment	Local x	-0.8400		0.0000	1.0000
44	Uniform Moment	Local x	-0.8400		0.0000	1.0000
45	Uniform Moment	Local x	-0.8400		0.0000	1.0000

LOAD CASE WS -30 deg 70mph, Member Loads

Member	Type	Direction	Magnitude at Start (kips or kips-ft)	Magnitude at End (kips or kips-ft)	Start Position (x/L)	End Position from start (x/L)
46	Uniform Moment	Local x	-0.8400		0.0000	1.0000
47	Uniform Moment	Local x	-0.8400		0.0000	1.0000
48	Uniform Moment	Local x	-0.8400		0.0000	1.0000
49	Uniform Moment	Local x	-0.8400		0.0000	1.0000
50	Uniform Moment	Local x	-0.8400		0.0000	1.0000
51	Uniform Moment	Local x	-0.8400		0.0000	1.0000
52	Uniform Moment	Local x	-0.8400		0.0000	1.0000
53	Uniform Moment	Local x	-0.8400		0.0000	1.0000
54	Uniform Moment	Local x	-0.8400		0.0000	1.0000
55	Uniform Moment	Local x	-0.8400		0.0000	1.0000
56	Uniform Moment	Local x	-0.8400		0.0000	1.0000
57	Uniform Moment	Local x	-0.8400		0.0000	1.0000
1	Uniform Force	Local x	-0.1000		0.0000	1.0000
2	Uniform Force	Local x	-0.1000		0.0000	1.0000
3	Uniform Force	Local x	-0.1000		0.0000	1.0000
4	Uniform Force	Local x	-0.1000		0.0000	1.0000
5	Uniform Force	Local x	-0.1000		0.0000	1.0000
6	Uniform Force	Local x	-0.1000		0.0000	1.0000
7	Uniform Force	Local x	-0.1000		0.0000	1.0000
8	Uniform Force	Local x	-0.1000		0.0000	1.0000
9	Uniform Force	Local x	-0.1000		0.0000	1.0000
10	Uniform Force	Local x	-0.1000		0.0000	1.0000
11	Uniform Force	Local x	-0.1000		0.0000	1.0000
12	Uniform Force	Local x	-0.1000		0.0000	1.0000
13	Uniform Force	Local x	-0.1000		0.0000	1.0000
14	Uniform Force	Local x	-0.1000		0.0000	1.0000
15	Uniform Force	Local x	-0.1000		0.0000	1.0000
16	Uniform Force	Local x	-0.1000		0.0000	1.0000
17	Uniform Force	Local x	-0.1000		0.0000	1.0000
18	Uniform Force	Local x	-0.1000		0.0000	1.0000
19	Uniform Force	Local x	-0.1000		0.0000	1.0000
20	Uniform Force	Local x	-0.1000		0.0000	1.0000
21	Uniform Force	Local x	-0.1000		0.0000	1.0000
22	Uniform Force	Local x	-0.1000		0.0000	1.0000

LOAD CASE WS -30 deg 70mph, Member Loads

Member	Type	Direction	Magnitude at Start (kips or kips-ft)	Magnitude at End (kips or kips-ft)	Start Position (x/L)	End Position from start (x/L)
23	Uniform Force	Local x	-0.1000		0.0000	1.0000
24	Uniform Force	Local x	-0.1000		0.0000	1.0000
25	Uniform Force	Local x	-0.1000		0.0000	1.0000
26	Uniform Force	Local x	-0.1000		0.0000	1.0000
27	Uniform Force	Local x	-0.1000		0.0000	1.0000
28	Uniform Force	Local x	-0.1000		0.0000	1.0000
29	Uniform Force	Local x	-0.1000		0.0000	1.0000
30	Uniform Force	Local x	-0.1000		0.0000	1.0000
31	Uniform Force	Local x	-0.1000		0.0000	1.0000
32	Uniform Force	Local x	-0.1000		0.0000	1.0000
33	Uniform Force	Local x	-0.1000		0.0000	1.0000
34	Uniform Force	Local x	-0.1000		0.0000	1.0000
35	Uniform Force	Local x	-0.1000		0.0000	1.0000
36	Uniform Force	Local x	-0.1000		0.0000	1.0000
37	Uniform Force	Local x	-0.1000		0.0000	1.0000
38	Uniform Force	Local x	-0.1000		0.0000	1.0000
39	Uniform Force	Local x	-0.1000		0.0000	1.0000
40	Uniform Force	Local x	-0.1000		0.0000	1.0000
41	Uniform Force	Local x	-0.1000		0.0000	1.0000
42	Uniform Force	Local x	-0.1000		0.0000	1.0000
43	Uniform Force	Local x	-0.1000		0.0000	1.0000
44	Uniform Force	Local x	-0.1000		0.0000	1.0000
45	Uniform Force	Local x	-0.1000		0.0000	1.0000
46	Uniform Force	Local x	-0.1000		0.0000	1.0000
47	Uniform Force	Local x	-0.1000		0.0000	1.0000
48	Uniform Force	Local x	-0.1000		0.0000	1.0000
49	Uniform Force	Local x	-0.1000		0.0000	1.0000
50	Uniform Force	Local x	-0.1000		0.0000	1.0000
51	Uniform Force	Local x	-0.1000		0.0000	1.0000
52	Uniform Force	Local x	-0.1000		0.0000	1.0000
53	Uniform Force	Local x	-0.1000		0.0000	1.0000
54	Uniform Force	Local x	-0.1000		0.0000	1.0000
55	Uniform Force	Local x	-0.1000		0.0000	1.0000
56	Uniform Force	Local x	-0.1000		0.0000	1.0000

LOAD CASE WS -30 deg 70mph, Member Loads

Member	Type	Direction	Magnitude at Start (kips or kips-ft)	Magnitude at End (kips or kips-ft)	Start Position (x/L)	End Position from start (x/L)
57	Uniform Force	Local x	-0.1000		0.0000	1.0000
101	Uniform Force	Local x	-0.0110		0.0000	1.0000
102	Uniform Force	Local x	-0.0110		0.0000	1.0000
103	Uniform Force	Local x	-0.0110		0.0000	1.0000
104	Uniform Force	Local x	-0.0110		0.0000	1.0000
105	Uniform Force	Local x	-0.0110		0.0000	1.0000
106	Uniform Force	Local x	-0.0110		0.0000	1.0000
107	Uniform Force	Local x	-0.0110		0.0000	1.0000
108	Uniform Force	Local x	-0.0110		0.0000	1.0000
109	Uniform Force	Local x	-0.0110		0.0000	1.0000
110	Uniform Force	Local x	-0.0110		0.0000	1.0000
111	Uniform Force	Local x	-0.0110		0.0000	1.0000
112	Uniform Force	Local x	-0.0110		0.0000	1.0000
113	Uniform Force	Local x	-0.0110		0.0000	1.0000
114	Uniform Force	Local x	-0.0110		0.0000	1.0000
115	Uniform Force	Local x	-0.0110		0.0000	1.0000
116	Uniform Force	Local x	-0.0110		0.0000	1.0000
117	Uniform Force	Local x	-0.0110		0.0000	1.0000
118	Uniform Force	Local x	-0.0110		0.0000	1.0000
119	Uniform Force	Local x	-0.0110		0.0000	1.0000
120	Uniform Force	Local x	-0.0110		0.0000	1.0000
121	Uniform Force	Local x	-0.0110		0.0000	1.0000
122	Uniform Force	Local x	-0.0110		0.0000	1.0000
123	Uniform Force	Local x	-0.0110		0.0000	1.0000
124	Uniform Force	Local x	-0.0110		0.0000	1.0000
125	Uniform Force	Local x	-0.0110		0.0000	1.0000
126	Uniform Force	Local x	-0.0110		0.0000	1.0000
127	Uniform Force	Local x	-0.0110		0.0000	1.0000
128	Uniform Force	Local x	-0.0110		0.0000	1.0000
129	Uniform Force	Local x	-0.0110		0.0000	1.0000
130	Uniform Force	Local x	-0.0110		0.0000	1.0000
131	Uniform Force	Local x	-0.0110		0.0000	1.0000
132	Uniform Force	Local x	-0.0110		0.0000	1.0000
133	Uniform Force	Local x	-0.0110		0.0000	1.0000

LOAD CASE WS -30 deg 70mph, Member Loads

Member	Type	Direction	Magnitude at Start (kips or kips-ft)	Magnitude at End (kips or kips-ft)	Start Position (x/L)	End Position from start (x/L)
134	Uniform Force	Local x	-0.0110		0.0000	1.0000
135	Uniform Force	Local x	-0.0110		0.0000	1.0000
136	Uniform Force	Local x	-0.0110		0.0000	1.0000
137	Uniform Force	Local x	-0.0110		0.0000	1.0000
138	Uniform Force	Local x	-0.0110		0.0000	1.0000
139	Uniform Force	Local x	-0.0110		0.0000	1.0000
140	Uniform Force	Local x	-0.0110		0.0000	1.0000
141	Uniform Force	Local x	-0.0110		0.0000	1.0000
142	Uniform Force	Local x	-0.0110		0.0000	1.0000
143	Uniform Force	Local x	-0.0110		0.0000	1.0000
144	Uniform Force	Local x	-0.0110		0.0000	1.0000
145	Uniform Force	Local x	-0.0110		0.0000	1.0000
146	Uniform Force	Local x	-0.0110		0.0000	1.0000
147	Uniform Force	Local x	-0.0110		0.0000	1.0000
148	Uniform Force	Local x	-0.0110		0.0000	1.0000
149	Uniform Force	Local x	-0.0110		0.0000	1.0000
150	Uniform Force	Local x	-0.0110		0.0000	1.0000
151	Uniform Force	Local x	-0.0110		0.0000	1.0000
152	Uniform Force	Local x	-0.0110		0.0000	1.0000
153	Uniform Force	Local x	-0.0110		0.0000	1.0000
154	Uniform Force	Local x	-0.0110		0.0000	1.0000
155	Uniform Force	Local x	-0.0110		0.0000	1.0000
156	Uniform Force	Local x	-0.0110		0.0000	1.0000
157	Uniform Force	Local x	-0.0110		0.0000	1.0000
158	Uniform Force	Local x	-0.0110		0.0000	1.0000
159	Uniform Force	Local x	-0.0110		0.0000	1.0000
160	Uniform Force	Local x	-0.0110		0.0000	1.0000
701	Uniform Force	Global X	-0.0100		0.0000	1.0000
702	Uniform Force	Global X	-0.0100		0.0000	1.0000
703	Uniform Force	Global X	-0.0100		0.0000	1.0000
704	Uniform Force	Global X	-0.0100		0.0000	1.0000
705	Uniform Force	Global X	-0.0100		0.0000	1.0000
706	Uniform Force	Global X	-0.0100		0.0000	1.0000
707	Uniform Force	Global X	-0.0100		0.0000	1.0000

LOAD CASE WS -30 deg 70mph, Member Loads

Member	Type	Direction	Magnitude at Start (kips or kips-ft)	Magnitude at End (kips or kips-ft)	Start Position (x/L)	End Position from start (x/L)
708	Uniform Force	Global X	-0.0100		0.0000	1.0000
709	Uniform Force	Global X	-0.0100		0.0000	1.0000
710	Uniform Force	Global X	-0.0100		0.0000	1.0000
711	Uniform Force	Global X	-0.0100		0.0000	1.0000
712	Uniform Force	Global X	-0.0100		0.0000	1.0000
713	Uniform Force	Global X	-0.0100		0.0000	1.0000
714	Uniform Force	Global X	-0.0100		0.0000	1.0000
715	Uniform Force	Global X	-0.0100		0.0000	1.0000
716	Uniform Force	Global X	-0.0100		0.0000	1.0000
717	Uniform Force	Global X	-0.0100		0.0000	1.0000
718	Uniform Force	Global X	-0.0100		0.0000	1.0000
719	Uniform Force	Global X	-0.0100		0.0000	1.0000
720	Uniform Force	Global X	-0.0100		0.0000	1.0000
721	Uniform Force	Global X	-0.0100		0.0000	1.0000
722	Uniform Force	Global X	-0.0100		0.0000	1.0000
723	Uniform Force	Global X	-0.0100		0.0000	1.0000
724	Uniform Force	Global X	-0.0100		0.0000	1.0000
725	Uniform Force	Global X	-0.0100		0.0000	1.0000
726	Uniform Force	Global X	-0.0100		0.0000	1.0000
727	Uniform Force	Global X	-0.0100		0.0000	1.0000
728	Uniform Force	Global X	-0.0100		0.0000	1.0000
729	Uniform Force	Global X	-0.0100		0.0000	1.0000
730	Uniform Force	Global X	-0.0100		0.0000	1.0000
731	Uniform Force	Global X	-0.0100		0.0000	1.0000
732	Uniform Force	Global X	-0.0100		0.0000	1.0000
733	Uniform Force	Global X	-0.0100		0.0000	1.0000
740	Uniform Force	Global X	-0.0100		0.0000	1.0000
741	Uniform Force	Global X	-0.0100		0.0000	1.0000
742	Uniform Force	Global X	-0.0100		0.0000	1.0000
743	Uniform Force	Global X	-0.0100		0.0000	1.0000
744	Uniform Force	Global X	-0.0100		0.0000	1.0000
745	Uniform Force	Global X	-0.0100		0.0000	1.0000
746	Uniform Force	Global X	-0.0100		0.0000	1.0000
747	Uniform Force	Global X	-0.0100		0.0000	1.0000

LOAD CASE WS -30 deg 70mph, Member Loads

Member	Type	Direction	Magnitude at Start (kips or kips-ft)	Magnitude at End (kips or kips-ft)	Start Position (x/L)	End Position from start (x/L)
748	Uniform Force	Global X	-0.0100		0.0000	1.0000
749	Uniform Force	Global X	-0.0100		0.0000	1.0000
750	Uniform Force	Global X	-0.0100		0.0000	1.0000
751	Uniform Force	Global X	-0.0100		0.0000	1.0000
752	Uniform Force	Global X	-0.0100		0.0000	1.0000
753	Uniform Force	Global X	-0.0100		0.0000	1.0000
754	Uniform Force	Global X	-0.0100		0.0000	1.0000
755	Uniform Force	Global X	-0.0100		0.0000	1.0000
756	Uniform Force	Global X	-0.0100		0.0000	1.0000
757	Uniform Force	Global X	-0.0100		0.0000	1.0000
758	Uniform Force	Global X	-0.0100		0.0000	1.0000
759	Uniform Force	Global X	-0.0100		0.0000	1.0000
760	Uniform Force	Global X	-0.0100		0.0000	1.0000
761	Uniform Force	Global X	-0.0100		0.0000	1.0000
762	Uniform Force	Global X	-0.0100		0.0000	1.0000
763	Uniform Force	Global X	-0.0100		0.0000	1.0000
764	Uniform Force	Global X	-0.0100		0.0000	1.0000
765	Uniform Force	Global X	-0.0100		0.0000	1.0000
766	Uniform Force	Global X	-0.0100		0.0000	1.0000
767	Uniform Force	Global X	-0.0100		0.0000	1.0000
768	Uniform Force	Global X	-0.0100		0.0000	1.0000
769	Uniform Force	Global X	-0.0100		0.0000	1.0000
770	Uniform Force	Global X	-0.0100		0.0000	1.0000
771	Uniform Force	Global X	-0.0100		0.0000	1.0000
772	Uniform Force	Global X	-0.0100		0.0000	1.0000
2002	Uniform Force	Global Y	0.0780		0.0000	1.0000
2003	Uniform Force	Global Y	0.0780		0.0000	1.0000
2002	Trapezoidal Force	Global X	-0.1300	-0.1000	0.0000	1.0000
2003	Trapezoidal Force	Global X	-0.1000	-0.0725	0.0000	1.0000
1017	Uniform Force	Global Y	0.0650		0.0000	1.0000
1018	Uniform Force	Global Y	0.0650		0.0000	1.0000
1019	Uniform Force	Global Y	0.0650		0.0000	1.0000
1017	Uniform Force	Global X	-0.0145		0.0000	1.0000
1018	Uniform Force	Global X	-0.0145		0.0000	1.0000

LOAD CASE WS -30 deg 70mph, Member Loads

Member	Type	Direction	Magnitude at Start (kips or kips-ft)	Magnitude at End (kips or kips-ft)	Start Position (x/L)	End Position from start (x/L)
1019	Uniform Force	Global X	-0.0145		0.0000	1.0000
1013	Uniform Force	Global Y	0.0650		0.0000	1.0000
1014	Uniform Force	Global Y	0.0650		0.0000	1.0000
1015	Uniform Force	Global Y	0.0650		0.0000	1.0000
1013	Uniform Force	Global X	-0.0145		0.0000	1.0000
1014	Uniform Force	Global X	-0.0145		0.0000	1.0000
1015	Uniform Force	Global X	-0.0145		0.0000	1.0000
3017	Uniform Force	Global Y	0.0650		0.0000	1.0000
3018	Uniform Force	Global Y	0.0650		0.0000	1.0000
3019	Uniform Force	Global Y	0.0650		0.0000	1.0000
3017	Uniform Force	Global X	-0.0145		0.0000	1.0000
3018	Uniform Force	Global X	-0.0145		0.0000	1.0000
3019	Uniform Force	Global X	-0.0145		0.0000	1.0000
3013	Uniform Force	Global Y	0.0650		0.0000	1.0000
3014	Uniform Force	Global Y	0.0650		0.0000	1.0000
3015	Uniform Force	Global Y	0.0650		0.0000	1.0000
3013	Uniform Force	Global X	-0.0145		0.0000	1.0000
3014	Uniform Force	Global X	-0.0145		0.0000	1.0000
3015	Uniform Force	Global X	-0.0145		0.0000	1.0000
1006	Uniform Force	Global X	-0.0360		0.0000	1.0000
1007	Uniform Force	Global X	-0.0360		0.0000	1.0000
1008	Uniform Force	Global X	-0.0360		0.0000	1.0000
1009	Uniform Force	Global X	-0.0360		0.0000	1.0000
1010	Uniform Force	Global X	-0.0360		0.0000	1.0000
1011	Uniform Force	Global X	-0.0360		0.0000	1.0000
1012	Uniform Force	Global X	-0.0360		0.0000	1.0000
3006	Uniform Force	Global X	-0.0360		0.0000	1.0000
3007	Uniform Force	Global X	-0.0360		0.0000	1.0000
3008	Uniform Force	Global X	-0.0360		0.0000	1.0000
3009	Uniform Force	Global X	-0.0360		0.0000	1.0000
3010	Uniform Force	Global X	-0.0360		0.0000	1.0000
3011	Uniform Force	Global X	-0.0360		0.0000	1.0000
3012	Uniform Force	Global X	-0.0360		0.0000	1.0000
501	Uniform Force	Global Y	0.0180		0.0000	1.0000

LOAD CASE WS -30 deg 70mph, Member Loads

Member	Type	Direction	Magnitude at Start (kips or kips-ft)	Magnitude at End (kips or kips-ft)	Start Position (x/L)	End Position from start (x/L)
502	Uniform Force	Global Y	0.0180		0.0000	1.0000
503	Uniform Force	Global Y	0.0180		0.0000	1.0000
504	Uniform Force	Global Y	0.0180		0.0000	1.0000
505	Uniform Force	Global Y	0.0180		0.0000	1.0000
601	Uniform Force	Global Y	0.0180		0.0000	1.0000
602	Uniform Force	Global Y	0.0180		0.0000	1.0000
603	Uniform Force	Global Y	0.0180		0.0000	1.0000
604	Uniform Force	Global Y	0.0180		0.0000	1.0000
605	Uniform Force	Global Y	0.0180		0.0000	1.0000
401	Uniform Force	Global Y	0.0780		0.0000	1.0000
402	Uniform Force	Global Y	0.0780		0.0000	1.0000
403	Uniform Force	Global Y	0.0780		0.0000	1.0000
405	Trapezoidal Force	Global Y	0.1000	0.0900	0.0000	1.0000
406	Trapezoidal Force	Global Y	0.0900	0.0900	0.0000	1.0000
407	Trapezoidal Force	Global Y	0.0900	0.0800	0.0000	1.0000
408	Trapezoidal Force	Global Y	0.0800	0.0800	0.0000	1.0000
409	Trapezoidal Force	Global Y	0.0800	0.0700	0.0000	1.0000
410	Trapezoidal Force	Global Y	0.0700	0.0700	0.0000	1.0000
411	Trapezoidal Force	Global Y	0.0700	0.0700	0.0000	1.0000
412	Trapezoidal Force	Global Y	0.0700	0.0600	0.0000	1.0000
413	Trapezoidal Force	Global Y	0.0600	0.0600	0.0000	1.0000
501	Uniform Force	Global X	-0.0110		0.0000	1.0000
502	Uniform Force	Global X	-0.0110		0.0000	1.0000
503	Uniform Force	Global X	-0.0110		0.0000	1.0000
504	Uniform Force	Global X	-0.0110		0.0000	1.0000
505	Uniform Force	Global X	-0.0110		0.0000	1.0000
601	Uniform Force	Global X	-0.0110		0.0000	1.0000
602	Uniform Force	Global X	-0.0110		0.0000	1.0000
603	Uniform Force	Global X	-0.0110		0.0000	1.0000
604	Uniform Force	Global X	-0.0110		0.0000	1.0000
605	Uniform Force	Global X	-0.0110		0.0000	1.0000
401	Uniform Force	Global X	-0.0360		0.0000	1.0000
402	Uniform Force	Global X	-0.0360		0.0000	1.0000
403	Uniform Force	Global X	-0.0360		0.0000	1.0000

LOAD CASE WS -30 deg 70mph, Member Loads

Member	Type	Direction	Magnitude at Start (kips or kips-ft)	Magnitude at End (kips or kips-ft)	Start Position (x/L)	End Position from start (x/L)
405	Trapezoidal Force	Global X	-0.0500	-0.0500	0.0000	1.0000
406	Trapezoidal Force	Global X	-0.0500	-0.0500	0.0000	1.0000
407	Trapezoidal Force	Global X	-0.0500	-0.0500	0.0000	1.0000
408	Trapezoidal Force	Global X	-0.0500	-0.0400	0.0000	1.0000
409	Trapezoidal Force	Global X	-0.0400	-0.0400	0.0000	1.0000
410	Trapezoidal Force	Global X	-0.0400	-0.0400	0.0000	1.0000
411	Trapezoidal Force	Global X	-0.0400	-0.0400	0.0000	1.0000
412	Trapezoidal Force	Global X	-0.0400	-0.0400	0.0000	1.0000
413	Trapezoidal Force	Global X	-0.0400	-0.0300	0.0000	1.0000

LOAD CASE WS_-15 deg_70mph, Member Loads

Member	Type	Direction	Magnitude at Start (kips or kips-ft)	Magnitude at End (kips or kips-ft)	Start Position (x/L)	End Position from start (x/L)
1	Uniform Force	Global Y	0.2550		0.0000	1.0000
2	Uniform Force	Global Y	0.2550		0.0000	1.0000
3	Uniform Force	Global Y	0.2550		0.0000	1.0000
4	Uniform Force	Global Y	0.2550		0.0000	1.0000
5	Uniform Force	Global Y	0.2550		0.0000	1.0000
6	Uniform Force	Global Y	0.2550		0.0000	1.0000
7	Uniform Force	Global Y	0.2550		0.0000	1.0000
8	Uniform Force	Global Y	0.2550		0.0000	1.0000
9	Uniform Force	Global Y	0.2550		0.0000	1.0000
10	Uniform Force	Global Y	0.2550		0.0000	1.0000
11	Uniform Force	Global Y	0.2550		0.0000	1.0000
12	Uniform Force	Global Y	0.2550		0.0000	1.0000
13	Uniform Force	Global Y	0.2550		0.0000	1.0000
14	Uniform Force	Global Y	0.2550		0.0000	1.0000
15	Uniform Force	Global Y	0.2550		0.0000	1.0000
16	Uniform Force	Global Y	0.2550		0.0000	1.0000
17	Uniform Force	Global Y	0.2550		0.0000	1.0000
18	Uniform Force	Global Y	0.2550		0.0000	1.0000
19	Uniform Force	Global Y	0.2550		0.0000	1.0000
20	Uniform Force	Global Y	0.2550		0.0000	1.0000

LOAD CASE WS -15 deg 70mph, Member Loads

Member	Type	Direction	Magnitude at Start (kips or kips-ft)	Magnitude at End (kips or kips-ft)	Start Position (x/L)	End Position from start (x/L)
21	Uniform Force	Global Y	0.2550		0.0000	1.0000
22	Uniform Force	Global Y	0.2550		0.0000	1.0000
23	Uniform Force	Global Y	0.2550		0.0000	1.0000
24	Uniform Force	Global Y	0.2550		0.0000	1.0000
25	Uniform Force	Global Y	0.2550		0.0000	1.0000
26	Uniform Force	Global Y	0.2550		0.0000	1.0000
27	Uniform Force	Global Y	0.2550		0.0000	1.0000
28	Uniform Force	Global Y	0.2550		0.0000	1.0000
29	Uniform Force	Global Y	0.2550		0.0000	1.0000
30	Uniform Force	Global Y	0.2550		0.0000	1.0000
31	Uniform Force	Global Y	0.2550		0.0000	1.0000
32	Uniform Force	Global Y	0.2550		0.0000	1.0000
33	Uniform Force	Global Y	0.2550		0.0000	1.0000
34	Uniform Force	Global Y	0.2550		0.0000	1.0000
35	Uniform Force	Global Y	0.2550		0.0000	1.0000
36	Uniform Force	Global Y	0.2550		0.0000	1.0000
37	Uniform Force	Global Y	0.2550		0.0000	1.0000
38	Uniform Force	Global Y	0.2550		0.0000	1.0000
39	Uniform Force	Global Y	0.2550		0.0000	1.0000
40	Uniform Force	Global Y	0.2550		0.0000	1.0000
41	Uniform Force	Global Y	0.2550		0.0000	1.0000
42	Uniform Force	Global Y	0.2550		0.0000	1.0000
43	Uniform Force	Global Y	0.2550		0.0000	1.0000
44	Uniform Force	Global Y	0.2550		0.0000	1.0000
45	Uniform Force	Global Y	0.2550		0.0000	1.0000
46	Uniform Force	Global Y	0.2550		0.0000	1.0000
47	Uniform Force	Global Y	0.2550		0.0000	1.0000
48	Uniform Force	Global Y	0.2550		0.0000	1.0000
49	Uniform Force	Global Y	0.2550		0.0000	1.0000
50	Uniform Force	Global Y	0.2550		0.0000	1.0000
51	Uniform Force	Global Y	0.2550		0.0000	1.0000
52	Uniform Force	Global Y	0.2550		0.0000	1.0000
53	Uniform Force	Global Y	0.2550		0.0000	1.0000
54	Uniform Force	Global Y	0.2550		0.0000	1.0000

LOAD CASE WS -15 deg 70mph, Member Loads

Member	Type	Direction	Magnitude at Start (kips or kips-ft)	Magnitude at End (kips or kips-ft)	Start Position (x/L)	End Position from start (x/L)
55	Uniform Force	Global Y	0.2550		0.0000	1.0000
56	Uniform Force	Global Y	0.2550		0.0000	1.0000
57	Uniform Force	Global Y	0.2550		0.0000	1.0000
101	Uniform Force	Global Y	0.0270		0.0000	1.0000
102	Uniform Force	Global Y	0.0270		0.0000	1.0000
103	Uniform Force	Global Y	0.0270		0.0000	1.0000
104	Uniform Force	Global Y	0.0270		0.0000	1.0000
105	Uniform Force	Global Y	0.0270		0.0000	1.0000
106	Uniform Force	Global Y	0.0270		0.0000	1.0000
107	Uniform Force	Global Y	0.0270		0.0000	1.0000
108	Uniform Force	Global Y	0.0270		0.0000	1.0000
109	Uniform Force	Global Y	0.0270		0.0000	1.0000
110	Uniform Force	Global Y	0.0270		0.0000	1.0000
111	Uniform Force	Global Y	0.0270		0.0000	1.0000
112	Uniform Force	Global Y	0.0270		0.0000	1.0000
113	Uniform Force	Global Y	0.0270		0.0000	1.0000
114	Uniform Force	Global Y	0.0270		0.0000	1.0000
115	Uniform Force	Global Y	0.0270		0.0000	1.0000
116	Uniform Force	Global Y	0.0270		0.0000	1.0000
117	Uniform Force	Global Y	0.0270		0.0000	1.0000
118	Uniform Force	Global Y	0.0270		0.0000	1.0000
119	Uniform Force	Global Y	0.0270		0.0000	1.0000
120	Uniform Force	Global Y	0.0270		0.0000	1.0000
121	Uniform Force	Global Y	0.0270		0.0000	1.0000
122	Uniform Force	Global Y	0.0270		0.0000	1.0000
123	Uniform Force	Global Y	0.0270		0.0000	1.0000
124	Uniform Force	Global Y	0.0270		0.0000	1.0000
125	Uniform Force	Global Y	0.0270		0.0000	1.0000
126	Uniform Force	Global Y	0.0270		0.0000	1.0000
127	Uniform Force	Global Y	0.0270		0.0000	1.0000
128	Uniform Force	Global Y	0.0270		0.0000	1.0000
129	Uniform Force	Global Y	0.0270		0.0000	1.0000
130	Uniform Force	Global Y	0.0270		0.0000	1.0000
131	Uniform Force	Global Y	0.0270		0.0000	1.0000

LOAD CASE WS -15 deg 70mph, Member Loads

Member	Type	Direction	Magnitude at Start (kips or kips-ft)	Magnitude at End (kips or kips-ft)	Start Position (x/L)	End Position from start (x/L)
132	Uniform Force	Global Y	0.0270		0.0000	1.0000
133	Uniform Force	Global Y	0.0270		0.0000	1.0000
134	Uniform Force	Global Y	0.0270		0.0000	1.0000
135	Uniform Force	Global Y	0.0270		0.0000	1.0000
136	Uniform Force	Global Y	0.0270		0.0000	1.0000
137	Uniform Force	Global Y	0.0270		0.0000	1.0000
138	Uniform Force	Global Y	0.0270		0.0000	1.0000
139	Uniform Force	Global Y	0.0270		0.0000	1.0000
140	Uniform Force	Global Y	0.0270		0.0000	1.0000
141	Uniform Force	Global Y	0.0270		0.0000	1.0000
142	Uniform Force	Global Y	0.0270		0.0000	1.0000
143	Uniform Force	Global Y	0.0270		0.0000	1.0000
144	Uniform Force	Global Y	0.0270		0.0000	1.0000
145	Uniform Force	Global Y	0.0270		0.0000	1.0000
146	Uniform Force	Global Y	0.0270		0.0000	1.0000
147	Uniform Force	Global Y	0.0270		0.0000	1.0000
148	Uniform Force	Global Y	0.0270		0.0000	1.0000
149	Uniform Force	Global Y	0.0270		0.0000	1.0000
150	Uniform Force	Global Y	0.0270		0.0000	1.0000
151	Uniform Force	Global Y	0.0270		0.0000	1.0000
152	Uniform Force	Global Y	0.0270		0.0000	1.0000
153	Uniform Force	Global Y	0.0270		0.0000	1.0000
154	Uniform Force	Global Y	0.0270		0.0000	1.0000
155	Uniform Force	Global Y	0.0270		0.0000	1.0000
156	Uniform Force	Global Y	0.0270		0.0000	1.0000
157	Uniform Force	Global Y	0.0270		0.0000	1.0000
158	Uniform Force	Global Y	0.0270		0.0000	1.0000
159	Uniform Force	Global Y	0.0270		0.0000	1.0000
160	Uniform Force	Global Y	0.0270		0.0000	1.0000
701	Uniform Force	Global Y	0.0250		0.0000	1.0000
702	Uniform Force	Global Y	0.0250		0.0000	1.0000
703	Uniform Force	Global Y	0.0250		0.0000	1.0000
704	Uniform Force	Global Y	0.0250		0.0000	1.0000
705	Uniform Force	Global Y	0.0250		0.0000	1.0000

LOAD CASE WS -15 deg 70mph, Member Loads

Member	Type	Direction	Magnitude at Start (kips or kips-ft)	Magnitude at End (kips or kips-ft)	Start Position (x/L)	End Position from start (x/L)
706	Uniform Force	Global Y	0.0250		0.0000	1.0000
707	Uniform Force	Global Y	0.0250		0.0000	1.0000
708	Uniform Force	Global Y	0.0250		0.0000	1.0000
709	Uniform Force	Global Y	0.0250		0.0000	1.0000
710	Uniform Force	Global Y	0.0250		0.0000	1.0000
711	Uniform Force	Global Y	0.0250		0.0000	1.0000
712	Uniform Force	Global Y	0.0250		0.0000	1.0000
713	Uniform Force	Global Y	0.0250		0.0000	1.0000
714	Uniform Force	Global Y	0.0250		0.0000	1.0000
715	Uniform Force	Global Y	0.0250		0.0000	1.0000
716	Uniform Force	Global Y	0.0250		0.0000	1.0000
717	Uniform Force	Global Y	0.0250		0.0000	1.0000
718	Uniform Force	Global Y	0.0250		0.0000	1.0000
719	Uniform Force	Global Y	0.0250		0.0000	1.0000
720	Uniform Force	Global Y	0.0250		0.0000	1.0000
721	Uniform Force	Global Y	0.0250		0.0000	1.0000
722	Uniform Force	Global Y	0.0250		0.0000	1.0000
723	Uniform Force	Global Y	0.0250		0.0000	1.0000
724	Uniform Force	Global Y	0.0250		0.0000	1.0000
725	Uniform Force	Global Y	0.0250		0.0000	1.0000
726	Uniform Force	Global Y	0.0250		0.0000	1.0000
727	Uniform Force	Global Y	0.0250		0.0000	1.0000
728	Uniform Force	Global Y	0.0250		0.0000	1.0000
729	Uniform Force	Global Y	0.0250		0.0000	1.0000
730	Uniform Force	Global Y	0.0250		0.0000	1.0000
731	Uniform Force	Global Y	0.0250		0.0000	1.0000
732	Uniform Force	Global Y	0.0250		0.0000	1.0000
733	Uniform Force	Global Y	0.0250		0.0000	1.0000
740	Uniform Force	Global Y	0.0250		0.0000	1.0000
741	Uniform Force	Global Y	0.0250		0.0000	1.0000
742	Uniform Force	Global Y	0.0250		0.0000	1.0000
743	Uniform Force	Global Y	0.0250		0.0000	1.0000
744	Uniform Force	Global Y	0.0250		0.0000	1.0000
745	Uniform Force	Global Y	0.0250		0.0000	1.0000

LOAD CASE WS -15 deg 70mph, Member Loads

Member	Type	Direction	Magnitude at Start (kips or kips-ft)	Magnitude at End (kips or kips-ft)	Start Position (x/L)	End Position from start (x/L)
746	Uniform Force	Global Y	0.0250		0.0000	1.0000
747	Uniform Force	Global Y	0.0250		0.0000	1.0000
748	Uniform Force	Global Y	0.0250		0.0000	1.0000
749	Uniform Force	Global Y	0.0250		0.0000	1.0000
750	Uniform Force	Global Y	0.0250		0.0000	1.0000
751	Uniform Force	Global Y	0.0250		0.0000	1.0000
752	Uniform Force	Global Y	0.0250		0.0000	1.0000
753	Uniform Force	Global Y	0.0250		0.0000	1.0000
754	Uniform Force	Global Y	0.0250		0.0000	1.0000
755	Uniform Force	Global Y	0.0250		0.0000	1.0000
756	Uniform Force	Global Y	0.0250		0.0000	1.0000
757	Uniform Force	Global Y	0.0250		0.0000	1.0000
758	Uniform Force	Global Y	0.0250		0.0000	1.0000
759	Uniform Force	Global Y	0.0250		0.0000	1.0000
760	Uniform Force	Global Y	0.0250		0.0000	1.0000
761	Uniform Force	Global Y	0.0250		0.0000	1.0000
762	Uniform Force	Global Y	0.0250		0.0000	1.0000
763	Uniform Force	Global Y	0.0250		0.0000	1.0000
764	Uniform Force	Global Y	0.0250		0.0000	1.0000
765	Uniform Force	Global Y	0.0250		0.0000	1.0000
766	Uniform Force	Global Y	0.0250		0.0000	1.0000
767	Uniform Force	Global Y	0.0250		0.0000	1.0000
768	Uniform Force	Global Y	0.0250		0.0000	1.0000
769	Uniform Force	Global Y	0.0250		0.0000	1.0000
770	Uniform Force	Global Y	0.0250		0.0000	1.0000
771	Uniform Force	Global Y	0.0250		0.0000	1.0000
772	Uniform Force	Global Y	0.0250		0.0000	1.0000
1	Uniform Moment	Local x	-0.9000		0.0000	1.0000
2	Uniform Moment	Local x	-0.9000		0.0000	1.0000
3	Uniform Moment	Local x	-0.9000		0.0000	1.0000
4	Uniform Moment	Local x	-0.9000		0.0000	1.0000
5	Uniform Moment	Local x	-0.9000		0.0000	1.0000
6	Uniform Moment	Local x	-0.9000		0.0000	1.0000
7	Uniform Moment	Local x	-0.9000		0.0000	1.0000

LOAD CASE WS -15 deg 70mph, Member Loads

Member	Type	Direction	Magnitude at Start (kips or kips-ft)	Magnitude at End (kips or kips-ft)	Start Position (x/L)	End Position from start (x/L)
8	Uniform Moment	Local x	-0.9000		0.0000	1.0000
9	Uniform Moment	Local x	-0.9000		0.0000	1.0000
10	Uniform Moment	Local x	-0.9000		0.0000	1.0000
11	Uniform Moment	Local x	-0.9000		0.0000	1.0000
12	Uniform Moment	Local x	-0.9000		0.0000	1.0000
13	Uniform Moment	Local x	-0.9000		0.0000	1.0000
14	Uniform Moment	Local x	-0.9000		0.0000	1.0000
15	Uniform Moment	Local x	-0.9000		0.0000	1.0000
16	Uniform Moment	Local x	-0.9000		0.0000	1.0000
17	Uniform Moment	Local x	-0.9000		0.0000	1.0000
18	Uniform Moment	Local x	-0.9000		0.0000	1.0000
19	Uniform Moment	Local x	-0.9000		0.0000	1.0000
20	Uniform Moment	Local x	-0.9000		0.0000	1.0000
21	Uniform Moment	Local x	-0.9000		0.0000	1.0000
22	Uniform Moment	Local x	-0.9000		0.0000	1.0000
23	Uniform Moment	Local x	-0.9000		0.0000	1.0000
24	Uniform Moment	Local x	-0.9000		0.0000	1.0000
25	Uniform Moment	Local x	-0.9000		0.0000	1.0000
26	Uniform Moment	Local x	-0.9000		0.0000	1.0000
27	Uniform Moment	Local x	-0.9000		0.0000	1.0000
28	Uniform Moment	Local x	-0.9000		0.0000	1.0000
29	Uniform Moment	Local x	-0.9000		0.0000	1.0000
30	Uniform Moment	Local x	-0.9000		0.0000	1.0000
31	Uniform Moment	Local x	-0.9000		0.0000	1.0000
32	Uniform Moment	Local x	-0.9000		0.0000	1.0000
33	Uniform Moment	Local x	-0.9000		0.0000	1.0000
34	Uniform Moment	Local x	-0.9000		0.0000	1.0000
35	Uniform Moment	Local x	-0.9000		0.0000	1.0000
36	Uniform Moment	Local x	-0.9000		0.0000	1.0000
37	Uniform Moment	Local x	-0.9000		0.0000	1.0000
38	Uniform Moment	Local x	-0.9000		0.0000	1.0000
39	Uniform Moment	Local x	-0.9000		0.0000	1.0000
40	Uniform Moment	Local x	-0.9000		0.0000	1.0000
41	Uniform Moment	Local x	-0.9000		0.0000	1.0000

LOAD CASE WS -15 deg 70mph, Member Loads

Member	Type	Direction	Magnitude at Start (kips or kips-ft)	Magnitude at End (kips or kips-ft)	Start Position (x/L)	End Position from start (x/L)
42	Uniform Moment	Local x	-0.9000		0.0000	1.0000
43	Uniform Moment	Local x	-0.9000		0.0000	1.0000
44	Uniform Moment	Local x	-0.9000		0.0000	1.0000
45	Uniform Moment	Local x	-0.9000		0.0000	1.0000
46	Uniform Moment	Local x	-0.9000		0.0000	1.0000
47	Uniform Moment	Local x	-0.9000		0.0000	1.0000
48	Uniform Moment	Local x	-0.9000		0.0000	1.0000
49	Uniform Moment	Local x	-0.9000		0.0000	1.0000
50	Uniform Moment	Local x	-0.9000		0.0000	1.0000
51	Uniform Moment	Local x	-0.9000		0.0000	1.0000
52	Uniform Moment	Local x	-0.9000		0.0000	1.0000
53	Uniform Moment	Local x	-0.9000		0.0000	1.0000
54	Uniform Moment	Local x	-0.9000		0.0000	1.0000
55	Uniform Moment	Local x	-0.9000		0.0000	1.0000
56	Uniform Moment	Local x	-0.9000		0.0000	1.0000
57	Uniform Moment	Local x	-0.9000		0.0000	1.0000
1	Uniform Force	Local x	-0.0430		0.0000	1.0000
2	Uniform Force	Local x	-0.0430		0.0000	1.0000
3	Uniform Force	Local x	-0.0430		0.0000	1.0000
4	Uniform Force	Local x	-0.0430		0.0000	1.0000
5	Uniform Force	Local x	-0.0430		0.0000	1.0000
6	Uniform Force	Local x	-0.0430		0.0000	1.0000
7	Uniform Force	Local x	-0.0430		0.0000	1.0000
8	Uniform Force	Local x	-0.0430		0.0000	1.0000
9	Uniform Force	Local x	-0.0430		0.0000	1.0000
10	Uniform Force	Local x	-0.0430		0.0000	1.0000
11	Uniform Force	Local x	-0.0430		0.0000	1.0000
12	Uniform Force	Local x	-0.0430		0.0000	1.0000
13	Uniform Force	Local x	-0.0430		0.0000	1.0000
14	Uniform Force	Local x	-0.0430		0.0000	1.0000
15	Uniform Force	Local x	-0.0430		0.0000	1.0000
16	Uniform Force	Local x	-0.0430		0.0000	1.0000
17	Uniform Force	Local x	-0.0430		0.0000	1.0000
18	Uniform Force	Local x	-0.0430		0.0000	1.0000

LOAD CASE WS -15 deg 70mph, Member Loads

Member	Type	Direction	Magnitude at Start (kips or kips-ft)	Magnitude at End (kips or kips-ft)	Start Position (x/L)	End Position from start (x/L)
19	Uniform Force	Local x	-0.0430		0.0000	1.0000
20	Uniform Force	Local x	-0.0430		0.0000	1.0000
21	Uniform Force	Local x	-0.0430		0.0000	1.0000
22	Uniform Force	Local x	-0.0430		0.0000	1.0000
23	Uniform Force	Local x	-0.0430		0.0000	1.0000
24	Uniform Force	Local x	-0.0430		0.0000	1.0000
25	Uniform Force	Local x	-0.0430		0.0000	1.0000
26	Uniform Force	Local x	-0.0430		0.0000	1.0000
27	Uniform Force	Local x	-0.0430		0.0000	1.0000
28	Uniform Force	Local x	-0.0430		0.0000	1.0000
29	Uniform Force	Local x	-0.0430		0.0000	1.0000
30	Uniform Force	Local x	-0.0430		0.0000	1.0000
31	Uniform Force	Local x	-0.0430		0.0000	1.0000
32	Uniform Force	Local x	-0.0430		0.0000	1.0000
33	Uniform Force	Local x	-0.0430		0.0000	1.0000
34	Uniform Force	Local x	-0.0430		0.0000	1.0000
35	Uniform Force	Local x	-0.0430		0.0000	1.0000
36	Uniform Force	Local x	-0.0430		0.0000	1.0000
37	Uniform Force	Local x	-0.0430		0.0000	1.0000
38	Uniform Force	Local x	-0.0430		0.0000	1.0000
39	Uniform Force	Local x	-0.0430		0.0000	1.0000
40	Uniform Force	Local x	-0.0430		0.0000	1.0000
41	Uniform Force	Local x	-0.0430		0.0000	1.0000
42	Uniform Force	Local x	-0.0430		0.0000	1.0000
43	Uniform Force	Local x	-0.0430		0.0000	1.0000
44	Uniform Force	Local x	-0.0430		0.0000	1.0000
45	Uniform Force	Local x	-0.0430		0.0000	1.0000
46	Uniform Force	Local x	-0.0430		0.0000	1.0000
47	Uniform Force	Local x	-0.0430		0.0000	1.0000
48	Uniform Force	Local x	-0.0430		0.0000	1.0000
49	Uniform Force	Local x	-0.0430		0.0000	1.0000
50	Uniform Force	Local x	-0.0430		0.0000	1.0000
51	Uniform Force	Local x	-0.0430		0.0000	1.0000
52	Uniform Force	Local x	-0.0430		0.0000	1.0000

LOAD CASE WS -15 deg 70mph, Member Loads

Member	Type	Direction	Magnitude at Start (kips or kips-ft)	Magnitude at End (kips or kips-ft)	Start Position (x/L)	End Position from start (x/L)
53	Uniform Force	Local x	-0.0430		0.0000	1.0000
54	Uniform Force	Local x	-0.0430		0.0000	1.0000
55	Uniform Force	Local x	-0.0430		0.0000	1.0000
56	Uniform Force	Local x	-0.0430		0.0000	1.0000
57	Uniform Force	Local x	-0.0430		0.0000	1.0000
101	Uniform Force	Local x	-0.0050		0.0000	1.0000
102	Uniform Force	Local x	-0.0050		0.0000	1.0000
103	Uniform Force	Local x	-0.0050		0.0000	1.0000
104	Uniform Force	Local x	-0.0050		0.0000	1.0000
105	Uniform Force	Local x	-0.0050		0.0000	1.0000
106	Uniform Force	Local x	-0.0050		0.0000	1.0000
107	Uniform Force	Local x	-0.0050		0.0000	1.0000
108	Uniform Force	Local x	-0.0050		0.0000	1.0000
109	Uniform Force	Local x	-0.0050		0.0000	1.0000
110	Uniform Force	Local x	-0.0050		0.0000	1.0000
111	Uniform Force	Local x	-0.0050		0.0000	1.0000
112	Uniform Force	Local x	-0.0050		0.0000	1.0000
113	Uniform Force	Local x	-0.0050		0.0000	1.0000
114	Uniform Force	Local x	-0.0050		0.0000	1.0000
115	Uniform Force	Local x	-0.0050		0.0000	1.0000
116	Uniform Force	Local x	-0.0050		0.0000	1.0000
117	Uniform Force	Local x	-0.0050		0.0000	1.0000
118	Uniform Force	Local x	-0.0050		0.0000	1.0000
119	Uniform Force	Local x	-0.0050		0.0000	1.0000
120	Uniform Force	Local x	-0.0050		0.0000	1.0000
121	Uniform Force	Local x	-0.0050		0.0000	1.0000
122	Uniform Force	Local x	-0.0050		0.0000	1.0000
123	Uniform Force	Local x	-0.0050		0.0000	1.0000
124	Uniform Force	Local x	-0.0050		0.0000	1.0000
125	Uniform Force	Local x	-0.0050		0.0000	1.0000
126	Uniform Force	Local x	0.0050		0.0000	1.0000
127	Uniform Force	Local x	-0.0050		0.0000	1.0000
128	Uniform Force	Local x	-0.0050		0.0000	1.0000
129	Uniform Force	Local x	-0.0050		0.0000	1.0000

LOAD CASE WS -15 deg 70mph, Member Loads

Member	Type	Direction	Magnitude at Start (kips or kips-ft)	Magnitude at End (kips or kips-ft)	Start Position (x/L)	End Position from start (x/L)
130	Uniform Force	Local x	-0.0050		0.0000	1.0000
131	Uniform Force	Local x	-0.0050		0.0000	1.0000
132	Uniform Force	Local x	-0.0050		0.0000	1.0000
133	Uniform Force	Local x	-0.0050		0.0000	1.0000
134	Uniform Force	Local x	-0.0050		0.0000	1.0000
135	Uniform Force	Local x	-0.0050		0.0000	1.0000
136	Uniform Force	Local x	-0.0050		0.0000	1.0000
137	Uniform Force	Local x	-0.0050		0.0000	1.0000
138	Uniform Force	Local x	-0.0050		0.0000	1.0000
139	Uniform Force	Local x	-0.0050		0.0000	1.0000
140	Uniform Force	Local x	-0.0050		0.0000	1.0000
141	Uniform Force	Local x	-0.0050		0.0000	1.0000
142	Uniform Force	Local x	-0.0050		0.0000	1.0000
143	Uniform Force	Local x	-0.0050		0.0000	1.0000
144	Uniform Force	Local x	-0.0050		0.0000	1.0000
145	Uniform Force	Local x	-0.0050		0.0000	1.0000
146	Uniform Force	Local x	-0.0050		0.0000	1.0000
147	Uniform Force	Local x	-0.0050		0.0000	1.0000
148	Uniform Force	Local x	-0.0050		0.0000	1.0000
149	Uniform Force	Local x	-0.0050		0.0000	1.0000
150	Uniform Force	Local x	-0.0050		0.0000	1.0000
151	Uniform Force	Local x	-0.0050		0.0000	1.0000
152	Uniform Force	Local x	-0.0050		0.0000	1.0000
153	Uniform Force	Local x	-0.0050		0.0000	1.0000
154	Uniform Force	Local x	-0.0050		0.0000	1.0000
155	Uniform Force	Local x	-0.0050		0.0000	1.0000
156	Uniform Force	Local x	-0.0050		0.0000	1.0000
157	Uniform Force	Local x	-0.0050		0.0000	1.0000
158	Uniform Force	Local x	-0.0050		0.0000	1.0000
159	Uniform Force	Local x	-0.0050		0.0000	1.0000
160	Uniform Force	Local x	-0.0050		0.0000	1.0000
701	Uniform Force	Global X	-0.0040		0.0000	1.0000
702	Uniform Force	Global X	-0.0040		0.0000	1.0000
703	Uniform Force	Global X	-0.0040		0.0000	1.0000

LOAD CASE WS -15 deg 70mph, Member Loads

Member	Type	Direction	Magnitude at Start (kips or kips-ft)	Magnitude at End (kips or kips-ft)	Start Position (x/L)	End Position from start (x/L)
704	Uniform Force	Global X	-0.0040		0.0000	1.0000
705	Uniform Force	Global X	-0.0040		0.0000	1.0000
706	Uniform Force	Global X	-0.0040		0.0000	1.0000
707	Uniform Force	Global X	-0.0040		0.0000	1.0000
708	Uniform Force	Global X	-0.0040		0.0000	1.0000
709	Uniform Force	Global X	-0.0040		0.0000	1.0000
710	Uniform Force	Global X	-0.0040		0.0000	1.0000
711	Uniform Force	Global X	-0.0040		0.0000	1.0000
712	Uniform Force	Global X	-0.0040		0.0000	1.0000
713	Uniform Force	Global X	-0.0040		0.0000	1.0000
714	Uniform Force	Global X	-0.0040		0.0000	1.0000
715	Uniform Force	Global X	-0.0040		0.0000	1.0000
716	Uniform Force	Global X	-0.0040		0.0000	1.0000
717	Uniform Force	Global X	-0.0040		0.0000	1.0000
718	Uniform Force	Global X	-0.0040		0.0000	1.0000
719	Uniform Force	Global X	-0.0040		0.0000	1.0000
720	Uniform Force	Global X	-0.0040		0.0000	1.0000
721	Uniform Force	Global X	-0.0040		0.0000	1.0000
722	Uniform Force	Global X	-0.0040		0.0000	1.0000
723	Uniform Force	Global X	-0.0040		0.0000	1.0000
724	Uniform Force	Global X	-0.0040		0.0000	1.0000
725	Uniform Force	Global X	-0.0040		0.0000	1.0000
726	Uniform Force	Global X	-0.0040		0.0000	1.0000
727	Uniform Force	Global X	-0.0040		0.0000	1.0000
728	Uniform Force	Global X	-0.0040		0.0000	1.0000
729	Uniform Force	Global X	-0.0040		0.0000	1.0000
730	Uniform Force	Global X	-0.0040		0.0000	1.0000
731	Uniform Force	Global X	-0.0040		0.0000	1.0000
732	Uniform Force	Global X	-0.0040		0.0000	1.0000
733	Uniform Force	Global X	-0.0040		0.0000	1.0000
740	Uniform Force	Global X	-0.0040		0.0000	1.0000
741	Uniform Force	Global X	-0.0040		0.0000	1.0000
742	Uniform Force	Global X	-0.0040		0.0000	1.0000
743	Uniform Force	Global X	-0.0040		0.0000	1.0000

LOAD CASE WS -15 deg 70mph, Member Loads

Member	Type	Direction	Magnitude at Start (kips or kips-ft)	Magnitude at End (kips or kips-ft)	Start Position (x/L)	End Position from start (x/L)
744	Uniform Force	Global X	-0.0040		0.0000	1.0000
745	Uniform Force	Global X	-0.0040		0.0000	1.0000
746	Uniform Force	Global X	-0.0040		0.0000	1.0000
747	Uniform Force	Global X	-0.0040		0.0000	1.0000
748	Uniform Force	Global X	-0.0040		0.0000	1.0000
749	Uniform Force	Global X	-0.0040		0.0000	1.0000
750	Uniform Force	Global X	-0.0040		0.0000	1.0000
751	Uniform Force	Global X	-0.0040		0.0000	1.0000
752	Uniform Force	Global X	-0.0040		0.0000	1.0000
753	Uniform Force	Global X	-0.0040		0.0000	1.0000
754	Uniform Force	Global X	-0.0040		0.0000	1.0000
755	Uniform Force	Global X	-0.0040		0.0000	1.0000
756	Uniform Force	Global X	-0.0040		0.0000	1.0000
757	Uniform Force	Global X	-0.0040		0.0000	1.0000
758	Uniform Force	Global X	-0.0040		0.0000	1.0000
759	Uniform Force	Global X	-0.0040		0.0000	1.0000
760	Uniform Force	Global X	-0.0040		0.0000	1.0000
761	Uniform Force	Global X	-0.0040		0.0000	1.0000
762	Uniform Force	Global X	-0.0040		0.0000	1.0000
763	Uniform Force	Global X	-0.0040		0.0000	1.0000
764	Uniform Force	Global X	-0.0040		0.0000	1.0000
765	Uniform Force	Global X	-0.0040		0.0000	1.0000
766	Uniform Force	Global X	-0.0040		0.0000	1.0000
767	Uniform Force	Global X	-0.0040		0.0000	1.0000
768	Uniform Force	Global X	-0.0040		0.0000	1.0000
769	Uniform Force	Global X	-0.0040		0.0000	1.0000
770	Uniform Force	Global X	-0.0040		0.0000	1.0000
771	Uniform Force	Global X	-0.0040		0.0000	1.0000
772	Uniform Force	Global X	-0.0040		0.0000	1.0000
2002	Uniform Force	Global Y	0.0840		0.0000	1.0000
2003	Uniform Force	Global Y	0.0840		0.0000	1.0000
2002	Trapezoidal Force	Global X	-0.0680	-0.0530	0.0000	1.0000
2003	Trapezoidal Force	Global X	-0.0530	-0.0375	0.0000	1.0000
1017	Uniform Force	Global Y	0.0700		0.0000	1.0000

LOAD CASE WS -15 deg 70mph, Member Loads

Member	Type	Direction	Magnitude at Start (kips or kips-ft)	Magnitude at End (kips or kips-ft)	Start Position (x/L)	End Position from start (x/L)
1018	Uniform Force	Global Y	0.0700		0.0000	1.0000
1019	Uniform Force	Global Y	0.0700		0.0000	1.0000
1017	Uniform Force	Global X	-0.0075		0.0000	1.0000
1018	Uniform Force	Global X	-0.0075		0.0000	1.0000
1019	Uniform Force	Global X	-0.0075		0.0000	1.0000
1013	Uniform Force	Global Y	0.0700		0.0000	1.0000
1014	Uniform Force	Global Y	0.0700		0.0000	1.0000
1015	Uniform Force	Global Y	0.0700		0.0000	1.0000
1013	Uniform Force	Global X	-0.0075		0.0000	1.0000
1014	Uniform Force	Global X	-0.0075		0.0000	1.0000
1015	Uniform Force	Global X	-0.0075		0.0000	1.0000
3017	Uniform Force	Global Y	0.0700		0.0000	1.0000
3018	Uniform Force	Global Y	0.0700		0.0000	1.0000
3019	Uniform Force	Global Y	0.0700		0.0000	1.0000
3017	Uniform Force	Global X	-0.0075		0.0000	1.0000
3018	Uniform Force	Global X	-0.0075		0.0000	1.0000
3019	Uniform Force	Global X	-0.0075		0.0000	1.0000
3013	Uniform Force	Global Y	0.0700		0.0000	1.0000
3014	Uniform Force	Global Y	0.0700		0.0000	1.0000
3015	Uniform Force	Global Y	0.0700		0.0000	1.0000
3013	Uniform Force	Global X	-0.0075		0.0000	1.0000
3014	Uniform Force	Global X	-0.0075		0.0000	1.0000
3015	Uniform Force	Global X	-0.0075		0.0000	1.0000
1006	Uniform Force	Global X	-0.0188		0.0000	1.0000
1007	Uniform Force	Global X	-0.0188		0.0000	1.0000
1008	Uniform Force	Global X	-0.0188		0.0000	1.0000
1009	Uniform Force	Global X	-0.0188		0.0000	1.0000
1010	Uniform Force	Global X	-0.0188		0.0000	1.0000
1011	Uniform Force	Global X	-0.0188		0.0000	1.0000
1012	Uniform Force	Global X	-0.0188		0.0000	1.0000
3006	Uniform Force	Global X	-0.0188		0.0000	1.0000
3007	Uniform Force	Global X	-0.0188		0.0000	1.0000
3008	Uniform Force	Global X	-0.0188		0.0000	1.0000
3009	Uniform Force	Global X	-0.0188		0.0000	1.0000

LOAD CASE WS -15 deg 70mph, Member Loads

Member	Type	Direction	Magnitude at Start (kips or kips-ft)	Magnitude at End (kips or kips-ft)	Start Position (x/L)	End Position from start (x/L)
3010	Uniform Force	Global X	-0.0188		0.0000	1.0000
3011	Uniform Force	Global X	-0.0188		0.0000	1.0000
3012	Uniform Force	Global X	-0.0188		0.0000	1.0000
501	Uniform Force	Global Y	0.0200		0.0000	1.0000
502	Uniform Force	Global Y	0.0200		0.0000	1.0000
503	Uniform Force	Global Y	0.0200		0.0000	1.0000
504	Uniform Force	Global Y	0.0200		0.0000	1.0000
505	Uniform Force	Global Y	0.0200		0.0000	1.0000
601	Uniform Force	Global Y	0.0200		0.0000	1.0000
602	Uniform Force	Global Y	0.0200		0.0000	1.0000
603	Uniform Force	Global Y	0.0200		0.0000	1.0000
604	Uniform Force	Global Y	0.0200		0.0000	1.0000
605	Uniform Force	Global Y	0.0200		0.0000	1.0000
401	Uniform Force	Global Y	0.0840		0.0000	1.0000
402	Uniform Force	Global Y	0.0840		0.0000	1.0000
403	Uniform Force	Global Y	0.0840		0.0000	1.0000
405	Trapezoidal Force	Global Y	0.1100	0.1000	0.0000	1.0000
406	Trapezoidal Force	Global Y	0.1000	0.1000	0.0000	1.0000
407	Trapezoidal Force	Global Y	0.1000	0.0900	0.0000	1.0000
408	Trapezoidal Force	Global Y	0.0900	0.0900	0.0000	1.0000
409	Trapezoidal Force	Global Y	0.0900	0.0800	0.0000	1.0000
410	Trapezoidal Force	Global Y	0.0800	0.0800	0.0000	1.0000
411	Trapezoidal Force	Global Y	0.0800	0.0700	0.0000	1.0000
412	Trapezoidal Force	Global Y	0.0700	0.0700	0.0000	1.0000
413	Trapezoidal Force	Global Y	0.0700	0.0700	0.0000	1.0000
501	Uniform Force	Global X	-0.0050		0.0000	1.0000
502	Uniform Force	Global X	-0.0050		0.0000	1.0000
503	Uniform Force	Global X	-0.0050		0.0000	1.0000
504	Uniform Force	Global X	-0.0050		0.0000	1.0000
505	Uniform Force	Global X	-0.0050		0.0000	1.0000
601	Uniform Force	Global X	-0.0050		0.0000	1.0000
602	Uniform Force	Global X	-0.0050		0.0000	1.0000
603	Uniform Force	Global X	-0.0050		0.0000	1.0000
604	Uniform Force	Global X	-0.0050		0.0000	1.0000

LOAD CASE WS -15 deg 70mph, Member Loads

Member	Type	Direction	Magnitude at Start (kips or kips-ft)	Magnitude at End (kips or kips-ft)	Start Position (x/L)	End Position from start (x/L)
605	Uniform Force	Global X	-0.0050		0.0000	1.0000
401	Uniform Force	Global X	-0.0188		0.0000	1.0000
402	Uniform Force	Global X	-0.0188		0.0000	1.0000
403	Uniform Force	Global X	-0.0188		0.0000	1.0000
405	Trapezoidal Force	Global X	-0.0300	-0.0300	0.0000	1.0000
406	Trapezoidal Force	Global X	-0.0300	-0.0300	0.0000	1.0000
407	Trapezoidal Force	Global X	-0.0300	-0.0300	0.0000	1.0000
408	Trapezoidal Force	Global X	-0.0300	-0.0200	0.0000	1.0000
409	Trapezoidal Force	Global X	-0.0200	-0.0200	0.0000	1.0000
410	Trapezoidal Force	Global X	-0.0200	-0.0200	0.0000	1.0000
411	Trapezoidal Force	Global X	-0.0200	-0.0200	0.0000	1.0000
412	Trapezoidal Force	Global X	-0.0200	-0.0200	0.0000	1.0000
413	Trapezoidal Force	Global X	-0.0200	-0.0200	0.0000	1.0000

LOAD CASE DC2_Main Span, Member Loads

Member	Type	Direction	Magnitude at Start (kips or kips-ft)	Magnitude at End (kips or kips-ft)	Start Position (x/L)	End Position from start (x/L)
104	Uniform Force	Global Z	-0.6020		0.4100	1.0000
105	Uniform Force	Global Z	-0.6020		0.0000	1.0000
106	Uniform Force	Global Z	-0.6020		0.0000	1.0000
107	Uniform Force	Global Z	-0.6020		0.0000	0.6800
109	Uniform Force	Global Z	-0.6020		0.3000	1.0000
110	Uniform Force	Global Z	-0.6020		0.0000	1.0000
111	Uniform Force	Global Z	-0.6020		0.0000	1.0000
112	Uniform Force	Global Z	-0.6020		0.0000	0.6500
113	Uniform Force	Global Z	-0.6020		0.8900	1.0000
114	Uniform Force	Global Z	-0.6020		0.0000	1.0000
115	Uniform Force	Global Z	-0.6020		0.0000	1.0000
116	Uniform Force	Global Z	-0.6020		0.0000	1.0000
117	Uniform Force	Global Z	-0.6020		0.0000	0.4900
119	Uniform Force	Global Z	-0.5830		0.0000	1.0000
120	Uniform Force	Global Z	-0.5830		0.0000	1.0000
121	Uniform Force	Global Z	-0.5830		0.0000	1.0000

LOAD CASE DC2 Main Span, Member Loads

Member	Type	Direction	Magnitude at Start (kips or kips-ft)	Magnitude at End (kips or kips-ft)	Start Position (x/L)	End Position from start (x/L)
122	Uniform Force	Global Z	-0.5830		0.0000	0.4100
123	Uniform Force	Global Z	-0.5830		0.8800	1.0000
124	Uniform Force	Global Z	-0.5830		0.0000	1.0000
125	Uniform Force	Global Z	-0.5830		0.0000	1.0000
126	Uniform Force	Global Z	-0.5830		0.0000	1.0000
127	Uniform Force	Global Z	-0.5830		0.0000	0.2800

LOAD CASE DC2_Main Span, Joint Loads

Joint	X-Force (kips)	Y-Force (kips)	Z-Force (kips)	X-Moment (kips-ft)	Y-Moment (kips-ft)	Z-Moment (kips-ft)
2	0.0000	0.0000	-24.3000	0.0000	0.0000	0.0000
28	0.0000	0.0000	-13.9000	0.0000	0.0000	0.0000
101	0.0000	0.0000	-9.1000	0.0000	0.0000	0.0000
131	0.0000	0.0000	-6.5000	0.0000	0.0000	0.0000

LOAD CASE DC2_Back Span, Member Loads

Member	Type	Direction	Magnitude at Start (kips or kips-ft)	Magnitude at End (kips or kips-ft)	Start Position (x/L)	End Position from start (x/L)
134	Uniform Force	Global Z	-0.5830		0.6700	1.0000
135	Uniform Force	Global Z	-0.5830		0.0000	1.0000
136	Uniform Force	Global Z	-0.5830		0.0000	1.0000
137	Uniform Force	Global Z	-0.5830		0.0000	1.0000
138	Uniform Force	Global Z	-0.5830		0.0000	0.2100
138	Uniform Force	Global Z	-0.5830		0.8400	1.0000
139	Uniform Force	Global Z	-0.5830		0.0000	1.0000
140	Uniform Force	Global Z	-0.5830		0.0000	1.0000
141	Uniform Force	Global Z	-0.5830		0.0000	1.0000
142	Uniform Force	Global Z	-0.5830		0.0000	1.0000
143	Uniform Force	Global Z	-0.5830		0.0000	0.0800
143	Uniform Force	Global Z	-0.5830		0.7400	1.0000
144	Uniform Force	Global Z	-0.5830		0.0000	1.0000
145	Uniform Force	Global Z	-0.5830		0.0000	1.0000
146	Uniform Force	Global Z	-0.5830		0.0000	1.0000

LOAD CASE DC2 Back Span, Member Loads

Member	Type	Direction	Magnitude at Start (kips or kips-ft)	Magnitude at End (kips or kips-ft)	Start Position (x/L)	End Position from start (x/L)
147	Uniform Force	Global Z	-0.5830		0.0000	0.9400
148	Uniform Force	Global Z	-0.5830		0.6700	1.0000
149	Uniform Force	Global Z	-0.5830		0.0000	1.0000
150	Uniform Force	Global Z	-0.5830		0.0000	1.0000
151	Uniform Force	Global Z	-0.5830		0.0000	1.0000
152	Uniform Force	Global Z	-0.5830		0.0000	0.8000
153	Uniform Force	Global Z	-0.5830		0.6100	1.0000
154	Uniform Force	Global Z	-0.5830		0.0000	1.0000
155	Uniform Force	Global Z	-0.5830		0.0000	1.0000
156	Uniform Force	Global Z	-0.5830		0.0000	1.0000
157	Uniform Force	Global Z	-0.5830		0.0000	0.7000

LOAD CASE DC2_Back Span, Joint Loads

Joint	X-Force (kips)	Y-Force (kips)	Z-Force (kips)	X-Moment (kips-ft)	Y-Moment (kips-ft)	Z-Moment (kips-ft)
28	0.0000	0.0000	-13.9000	0.0000	0.0000	0.0000
55	0.0000	0.0000	-34.7000	0.0000	0.0000	0.0000
57	0.0000	0.0000	-5.9000	0.0000	0.0000	0.0000
131	0.0000	0.0000	-6.5000	0.0000	0.0000	0.0000
161	0.0000	0.0000	-9.1000	0.0000	0.0000	0.0000

LOAD COMBINATION WS+WUP_STRIII

Load Case	Factor
WS_0 deg	1.00
WUP	1.00

LOAD COMBINATION TU+Temp. Diff.

Load Case	Factor
TU+	1.00
Temp. Differential	1.00

LOAD COMBINATION DC+LL+WS Stiffness Matrix

Load Case	Factor
SW	1.00
DC2_Main Span	1.00
DC2_Back Span	1.00
DC3	1.00
DW_utilities	1.00
LL1_Deck_Offset	1.00
WS_45 deg	1.00

Stage Summary

Stage 1 'Stage 1' Day = 14 Temp = 70°F   Rel Hum = 75 %

Step 1 : Erect Piers

Construct Structure Groups

Piers

NO Support Activity.

NO Slave/Master Activity.

NO Tendon Activity.

NO Displacement Initialization Activity.

Load Activity

1 SW 1

Stage 2 'Stage 2' Day = 28 Temp = 70°F   Rel Hum = 75 %

Step 1 : Erect Main Span

Construct Structure Groups

Main Span

NO Support Activity.

Slave / Master Activity

1 1 1 1 NONE NONE NONE

2 101 101 101 NONE NONE NONE

NO Tendon Activity.

NO Displacement Initialization Activity.

Load Activity

1 SW 1

40 DC2_Main Span 1

Step 2 : Release Moment at Pylon

No Construction activity

NO Support Activity.

Slave / Master Activity

1 28 28 28 NONE NONE NONE

NO Tendon Activity.

NO Displacement Initialization Activity.

NO Load Activity.

Step 3 : Fix Joints

No Construction activity

NO Support Activity.

Slave / Master Activity

1 1 1 1 1 1 1

2 101 101 101 101 101 101

NO Tendon Activity.

NO Displacement Initialization Activity.

NO Load Activity.

Step 4 : Stress Main Bottom PT

No Construction activity

NO Support Activity.

NO Slave/Master Activity.

Tendon Activity

Main Deck D1-L Stress

Main Deck D1-R Stress

Main Deck D2-L Stress

Main Deck D2-R Stress

Main Deck D3-L Stress

Main Deck D3-R Stress

Main Deck D4-L Stress

Main Deck D4-R Stress

Main Deck D5-L Stress

Main Deck D5-R Stress

Main Deck D6-L Stress

Main Deck D6-R Stress

NO Displacement Initialization Activity.

NO Load Activity.

Step 5 : Stress Main Top PT

No Construction activity

NO Support Activity.

NO Slave/Master Activity.

Tendon Activity

Main Canopy C2-L Stress

Main Canopy C2-R Stress

Main Canopy C3-L Stress

Main Canopy C3-R Stress

NO Displacement Initialization Activity.

NO Load Activity.

Stage 3 'Stage 3' Day = 97 Temp = 70°F Rel Hum = 75 %

Step 1 : Erect Back Span

Construct Structure Groups

Back Span

NO Support Activity.

NO Slave/Master Activity.

NO Tendon Activity.

NO Displacement Initialization Activity.

Load Activity

1 SW 1

41 DC2_Back Span 1

Step 2 : Stress Back Bottom PT

No Construction activity

NO Support Activity.

NO Slave/Master Activity.

Tendon Activity

Back Deck D7-L Stress

Back Deck D7-R Stress

Back Deck D8-L Stress

Back Deck D8-R Stress

Back Deck D9-L Stress

Back Deck D9-R Stress

NO Displacement Initialization Activity.

NO Load Activity.

Step 3 : Stress Back Top PT

No Construction activity

NO Support Activity.

NO Slave/Master Activity.

Tendon Activity

Back Canopy C5-L Stress

Back Canopy C5-R Stress

NO Displacement Initialization Activity.

NO Load Activity.

Step 4 : Stress Top Continuity PT

No Construction activity

NO Support Activity.

NO Slave/Master Activity.

Tendon Activity

Full Length - Canopy C1-L Stress

Full Length - Canopy C1-R Stress

Full Length - Canopy C4-L Stress

Full Length - Canopy C4-R Stress

NO Displacement Initialization Activity.

NO Load Activity.

Step 5 : step 3

No Construction activity

NO Support Activity.

Slave / Master Activity

1 28 28 28 28 28 28

NO Tendon Activity.

NO Displacement Initialization Activity.

NO Load Activity.

Stage 4 'Stage 4' Day = 105 Temp = 70°F Rel Hum = 75 %

Step 1 : Cast Pylon-Top

Construct Structure Groups

Pylon

NO Support Activity.

NO Slave/Master Activity.

NO Tendon Activity.

NO Displacement Initialization Activity.

Load Activity

1 SW 1

Stage 5 'Stage 5' Day = 120 Temp = 70°F Rel Hum = 75 %

Step 1 : Install Cable 1

Construct Structure Groups

Stay 1

NO Support Activity.

NO Slave/Master Activity.

NO Tendon Activity.

NO Displacement Initialization Activity.

Load Activity

1 SW 1

Step 2 : Install Cable 2

Construct Structure Groups

Stay 2

NO Support Activity.

NO Slave/Master Activity.

NO Tendon Activity.

NO Displacement Initialization Activity.

Load Activity

1 SW 1

Step 3 : Install Cable 3

Construct Structure Groups

Stay 3

NO Support Activity.

NO Slave/Master Activity.

NO Tendon Activity.

NO Displacement Initialization Activity.

Load Activity

1 SW 1

Step 4 : Install Cable 4

Construct Structure Groups

Stay 4

NO Support Activity.

NO Slave/Master Activity.

NO Tendon Activity.

NO Displacement Initialization Activity.

Load Activity

1 SW 1

Step 5 : Install Cable 5

Construct Structure Groups

Stay 5

NO Support Activity.

NO Slave/Master Activity.

NO Tendon Activity.

NO Displacement Initialization Activity.

Load Activity

1 SW 1

Stage 6 'Stage 6' Day = 125 Temp = 70°F Rel Hum = 75 %

Step 1 : Install DC3

No Construction activity

NO Support Activity.

NO Slave/Master Activity.

NO Tendon Activity.

NO Displacement Initialization Activity.

Load Activity

18 DC3 1

Stage 7 'EOC' Day = 360 Temp = 70°F Rel Hum = 75 %

Currently NO Step in this Stage.

Stage 8 'Stage 9' Day = 500 Temp = 70°F Rel Hum = 75 %

Currently NO Step in this Stage.

Stage 9 'Stage 10' Day = 1000 Temp = 70°F Rel Hum = 75 %

Currently NO Step in this Stage.

Stage 10 'Stage 11' Day = 5000 Temp = 70°F Rel Hum = 75 %

Currently NO Step in this Stage.

Stage 11 'D10K' Day = 10000 Temp = 70°F Rel Hum = 75 %

Currently NO Step in this Stage.

FIGG

Main Span Erection Model

Wednesday, October 05, 2016

eleon
FIGG

424 North Calhoun Street
Tallahassee, Florida 32301
Tel: 850.224.7400

TABLE OF CONTENTS

INPUTS	Page#
- INPUT : Material Properties	Page 4
- INPUT : Sections	Page 4
- INPUT : Section Stress Points	Page 4
- INPUT : Section Dimensions	Page 5
- INPUT : Joints	Page 5
- INPUT : Members	Page 8
- INPUT : Tendons	Page 11
- INPUT : More Material Properties	Page 12
- Load Cases	Page 12
- Stage Summary	Page 15

Results	Page#
- RESULT : Member Stresses	Page 16

Graphics View 1

Zoom 3.052X Stage: Stage 2 / Stress Canopy PT

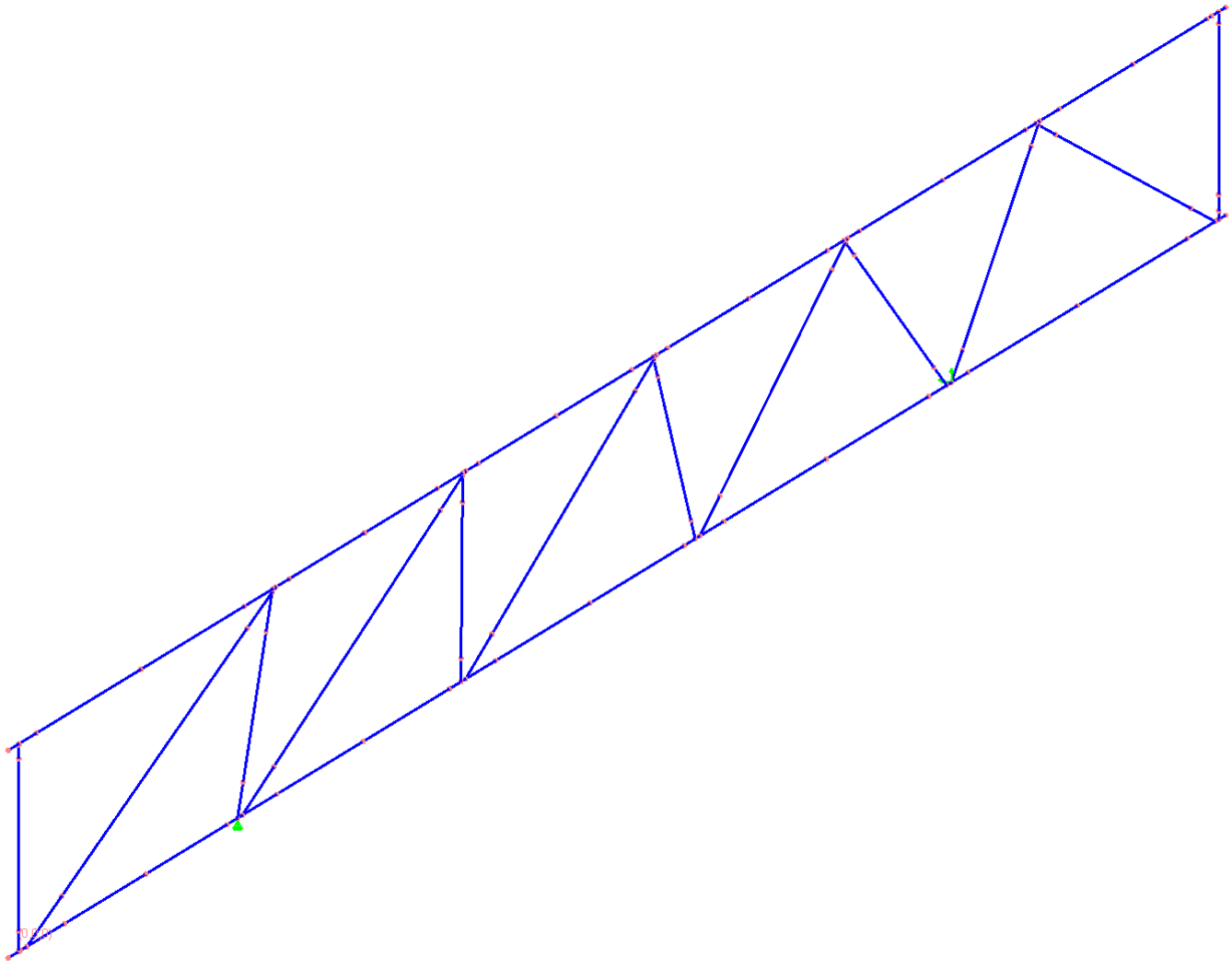

eleon
FIGG
J:\92262_FIU_Pedestrian Bridge\5_Bridge_Design\Calculations\Superstructure\Larsa Models\Main Span Erection-Construction\Main Span Erection_9.19.2016_South End Pinned_3' Diagonal.lar
Last Analysis Run : 9/19/2016 6:30:26 PM

Z Y
Local/UCS Axes

INPUT : Material Properties

Name	Modulus of Elasticity (kips/ft²)	Poisson Ratio	Shear Modulus (kips/ft²)	Unit Weight (kips/ft³)	Thermal Expansion (1/ °F *10^-6)	Assigned
Rigid	688,462.70	0.2000	286,859.46	0.0000	0.000000	Yes
Steel Pipe	4,176,000.00	0.3000	1,606,153.85	0.4900	6.500000	No
Steel PT	4,104,000.00	0.3000	1,578,461.54	0.4900	0.000000	Yes
f'c_5.5	553,799.20	0.2000	230,749.67	0.1500	6.000000	No
f'c_8.5ksi	688,462.70	0.2000	286,859.46	0.1500	6.000000	Yes

INPUT : Sections

Name	Section Area (ft²)	Shear Area in yy (ft²)	Shear Area in zz (ft²)	Torsion Constant (ft^4)	Inertia Izz (ft^4)	Inertia Iyy (ft^4)	Plastic Modulus Zyy (ft³)	Plastic Modulus Zzz (ft³)	Perimeter (ft)	Material Time-Effect	Ductility	Residual Strength (%)	Assigned
Rigid Link	3,000.0000	3,000.0000	3,000.0000	20,000.0000	70,000.0000	70,000.0000	0.0000	0.0000	0.0000	(NONE)	50.	0.	Yes
Concrete Truss_diagonal	3.5000	2.9167	2.9167	1.6798	0.8932	1.1667	0.0000	0.0000	7.5000	(NONE)	50.	0.	Yes
Concrete Truss_diagonal 2	6.1250	5.1042	5.1042	4.2955	1.5632	6.2526	0.0000	0.0000	10.5000	(NONE)	50.	0.	No
South End Diagonal	5.2500	4.3750	4.3750	3.3994	1.3398	3.9375	0.0000	0.0000	9.5000	(NONE)	50.	0.	Yes
Pylon End Diagonal	5.0313	4.1927	4.1927	3.1785	1.2840	3.4655	0.0000	0.0000	9.2500	(NONE)	50.	0.	Yes
Truss Top Chord-16ft wide	16.4607	16.4607	16.4607	5.3100	352.4200	2.6925	0.0000	0.0000	34.8773	(NONE)	0.	0.	Yes
Truss Bottom Chord-31ft 8in_wide	45.6753	45.6753	45.6753	36.1683	2,995.0267	12.4210	0.0000	0.0000	65.7188	(NONE)	0.	0.	Yes
Truss Top Chord - Anchor	20.9746	20.9746	20.9746	13.4192	357.7462	10.0557	0.0000	0.0000	37.0629	(NONE)	0.	0.	No

INPUT : Section Stress Points

Name	Point 1 Y (ft)	Point 1 Z (ft)	Point 2 Y (ft)	Point 2 Z (ft)	Point 3 Y (ft)	Point 3 Z (ft)	Point 4 Y (ft)	Point 4 Z (ft)	Point 5 Y (ft)	Point 5 Z (ft)	Point 6 Y (ft)	Point 6 Z (ft)
Rigid Link	(NONE)	(NONE)	(NONE)	(NONE)	(NONE)	(NONE)	(NONE)	(NONE)	(NONE)	(NONE)	(NONE)	(NONE)
Concrete Truss_diagonal	0.8750	1.0000	0.8750	-1.0000	-0.8750	-1.0000	-0.8750	1.0000	(NONE)	(NONE)	(NONE)	(NONE)
Concrete Truss_diagonal 2	0.8750	1.7500	0.8750	-1.7500	-0.8750	-1.7500	-0.8750	1.7500	(NONE)	(NONE)	(NONE)	(NONE)
South End Diagonal	0.8750	1.5000	0.8750	-1.5000	-0.8750	-1.5000	-0.8750	1.5000	(NONE)	(NONE)	(NONE)	(NONE)
Pylon End Diagonal	0.8750	1.4375	0.8750	-1.4375	-0.8750	-1.4375	-0.8750	1.4375	(NONE)	(NONE)	(NONE)	(NONE)
Truss Top Chord-16ft wide	-7.3046	1.0173	7.3046	1.0173	6.5372	-1.1169	-6.5372	-1.1169	0.0000	0.7906	0.0000	-0.2094
Truss Bottom Chord-31ft 8in_wide	-15.8333	0.9295	15.8333	0.9295	15.8333	0.1359	-15.8333	0.1359	0.0000	0.6470	-0.5000	-1.3973
Truss Top Chord - Anchor	-7.3046	0.7210	7.3046	0.7210	6.5372	-1.4132	-6.5372	-1.4132	0.0000	1.7443	0.0000	-0.5057

INPUT : Section Dimensions

Name	Shape	Dimension D1	Dimension D2	Dimension D3	Dimension D4	Dimension D5	Dimension D6
Rigid Link	Unspecified						
Concrete Truss_diagonal	Rectangle	1.7500	2.0000				
Concrete Truss_diagonal 2	Rectangle	1.7500	3.5000				
South End Diagonal	Rectangle	1.7500	3.0000				
Pylon End Diagonal	Rectangle	1.7500	2.8750				
Truss Top Chord-16ft wide	Parametric						
Truss Bottom Chord-31ft 8in_wide	Parametric						
Truss Top Chord - Anchor	Parametric						

INPUT : Joints

ID	X (ft)	Y (ft)	Z (ft)	Translation DOF	Rotation DOF	Displacement UCS	Assignment
1	0.0000	0.0000	-1.7350	all free	all free	Global	Yes
2	0.2500	0.0000	-1.7325	all free	all free	Global	Yes
3	1.1250	0.0000	-1.7239	all free	all free	Global	Yes
4	6.5400	0.0000	-1.6696	all free	all free	Global	Yes
5	18.1400	0.0000	-1.5536	all free	all free	Global	Yes
6	29.7300	0.0000	-1.4377	all free	all free	Global	Yes
7	31.2800	0.0000	-1.4222	all fixed	all free	Global	Yes
8	31.9600	0.0000	-1.4154	all free	all free	Global	Yes
9	36.8800	0.0000	-1.3663	all free	all free	Global	Yes
10	49.2000	0.0000	-1.2430	all free	all free	Global	Yes
11	61.5300	0.0000	-1.1197	all free	all free	Global	Yes
12	63.1900	0.0000	-1.1031	all free	all free	Global	Yes
13	63.8600	0.0000	-1.0964	all free	all free	Global	Yes
14	68.1400	0.0000	-1.0536	all free	all free	Global	Yes
15	81.6300	0.0000	-0.9188	all free	all free	Global	Yes
16	95.1100	0.0000	-0.7839	all free	all free	Global	Yes
17	96.6800	0.0000	-0.7682	all free	all free	Global	Yes
18	97.3500	0.0000	-0.7615	all free	all free	Global	Yes
19	100.7800	0.0000	-0.7272	all free	all free	Global	Yes
20	115.4200	0.0000	-0.5808	all free	all free	Global	Yes

INPUT : Joints

ID	X (ft)	Y (ft)	Z (ft)	Translation DOF	Rotation DOF	Displacement UCS	Assignment
21	130.0600	0.0000	-0.4344	all free	all free	Global	Yes
22	132.6400	0.0000	-0.4086	all free	all free	Global	Yes
23	133.3100	0.0000	-0.4019	y, z fixed	all free	Global	Yes
24	135.6500	0.0000	-0.3785	all free	all free	Global	Yes
25	151.3200	0.0000	-0.2218	all free	all free	Global	Yes
26	167.0000	0.0000	-0.0650	all free	all free	Global	Yes
27	171.0200	0.0000	-0.0248	all free	all free	Global	Yes
28	171.4992	0.0000	-0.0200	all free	all free	Global	Yes
29	172.5000	0.0000	-0.0100	all free	all free	Global	Yes
60	-1.5000	0.0000	-1.7500	all free	all free	Global	Yes
101	0.0000	0.0000	14.0879	all free	all free	Global	Yes
102	2.5000	0.0000	14.1129	all free	all free	Global	Yes
103	17.4500	0.0000	14.2624	all free	all free	Global	Yes
104	32.2083	0.0000	14.4119	all free	all free	Global	Yes
105	36.2900	0.0000	14.4508	all free	all free	Global	Yes
106	36.7200	0.0000	14.4551	all free	all free	Global	Yes
107	38.6563	0.0000	14.4764	all free	all free	Global	Yes
108	49.4100	0.0000	14.5820	all free	all free	Global	Yes
109	59.8125	0.0000	14.6877	all free	all free	Global	Yes
110	63.4600	0.0000	14.7225	all free	all free	Global	Yes
111	63.9000	0.0000	14.7269	all free	all free	Global	Yes
112	65.6875	0.0000	14.7465	all free	all free	Global	Yes
113	76.7900	0.0000	14.8558	all free	all free	Global	Yes
114	87.5729	0.0000	14.9651	all free	all free	Global	Yes
115	90.6800	0.0000	14.9947	all free	all free	Global	Yes
116	91.1400	0.0000	14.9993	all free	all free	Global	Yes
117	92.7292	0.0000	15.0167	all free	all free	Global	Yes
118	104.2800	0.0000	15.1307	all free	all free	Global	Yes
119	115.5625	0.0000	15.2447	all free	all free	Global	Yes
120	117.9500	0.0000	15.2674	all free	all free	Global	Yes
121	118.4500	0.0000	15.2724	all free	all free	Global	Yes
122	120.1354	0.0000	15.2885	all free	all free	Global	Yes
123	132.0000	0.0000	15.4079	all free	all free	Global	Yes
124	143.8646	0.0000	15.5273	all free	all free	Global	Yes

INPUT : Joints

ID	X (ft)	Y (ft)	Z (ft)	Translation DOF	Rotation DOF	Displacement UCS	Assignment
125	145.3400	0.0000	15.5414	all free	all free	Global	Yes
126	145.8800	0.0000	15.5467	all free	all free	Global	Yes
127	148.6875	0.0000	15.5735	all free	all free	Global	Yes
128	159.2000	0.0000	15.6799	all free	all free	Global	Yes
129	169.8300	0.0000	15.7863	all free	all free	Global	Yes
130	170.5000	0.0000	15.7929	all free	all free	Global	Yes
131	171.4992	0.0000	15.8129	all free	all free	Global	Yes
132	172.5000	0.0000	15.8229	all free	all free	Global	Yes
163	-1.5000	0.0000	14.0729	all free	all free	Global	Yes
400	171.4992	0.0000	0.6258	all free	all free	Global	Yes
723	171.4992	0.0000	1.8758	all free	all free	Global	Yes
724	171.4992	0.0000	14.8967	all free	all free	Global	Yes
701	0.0000	0.0000	-0.1517	all free	all free	Global	Yes
702	0.0000	0.0000	12.9525	all free	all free	Global	Yes
703	6.1354	0.0000	0.5463	all free	all free	Global	Yes
704	32.6250	0.0000	12.5983	all free	all free	Global	Yes
705	32.0729	0.0000	1.0567	all free	all free	Global	Yes
706	35.3646	0.0000	11.5150	all free	all free	Global	Yes
707	36.4271	0.0000	0.8379	all free	all free	Global	Yes
708	60.2708	0.0000	12.8900	all free	all free	Global	Yes
709	63.2292	0.0000	0.6782	all free	all free	Global	Yes
710	63.4167	0.0000	12.5011	all free	all free	Global	Yes
711	67.6250	0.0000	1.1192	all free	all free	Global	Yes
712	88.0833	0.0000	13.2025	all free	all free	Global	Yes
713	96.0521	0.0000	0.8796	all free	all free	Global	Yes
714	91.3021	0.0000	13.3379	all free	all free	Global	Yes
715	100.1771	0.0000	1.4108	all free	all free	Global	Yes
716	116.1667	0.0000	13.5775	all free	all free	Global	Yes
717	130.7813	0.0000	1.5567	all free	all free	Global	Yes
718	119.4063	0.0000	13.7025	all free	all free	Global	Yes
719	134.8542	0.0000	1.5463	all free	all free	Global	Yes
720	144.6563	0.0000	14.0046	all free	all free	Global	Yes
721	167.5104	0.0000	2.0879	all free	all free	Global	Yes
722	148.1771	0.0000	13.8067	all free	all free	Global	Yes

INPUT : Joints

ID	X (ft)	Y (ft)	Z (ft)	Translation DOF	Rotation DOF	Displacement UCS	Assignment
801	36.2185	0.0000	14.2233	all free	all free	Global	Yes
802	63.4479	0.0000	14.5046	all free	all free	Global	Yes
803	90.7500	0.0000	14.7650	all free	all free	Global	Yes
804	118.1458	0.0000	15.0463	all free	all free	Global	Yes
805	145.6979	0.0000	15.3171	all free	all free	Global	Yes
1000	0.0000	0.0000	-1.6517	all free	all free	Global	Yes
1001	0.0000	0.0000	14.0046	all free	all free	Global	Yes

INPUT : Members

ID	I-Joint	J-Joint	Span	Type	Section at Start	Section at End	Material	Prestress Force (kips)	Length (ft)	Rigid Zone from Start (x/L)	Rigid Zone from End (x/L)	Orientation Angle (deg)	Casting (day)	Structure Group
1	1	2	-	Beam	Truss Bottom Chord-31ft 8in_wide	(same as start)	f'c_8.5ksi	0.0000	.25	0.0000	0.0000	0.0000	0	Main Span
2	2	3	-	Beam	Truss Bottom Chord-31ft 8in_wide	(same as start)	f'c_8.5ksi	0.0000	.875	0.0000	0.0000	0.0000	0	Main Span
3	3	4	-	Beam	Truss Bottom Chord-31ft 8in_wide	(same as start)	f'c_8.5ksi	0.0000	5.4153	0.0000	0.0000	0.0000	0	Main Span
4	4	5	-	Beam	Truss Bottom Chord-31ft 8in_wide	(same as start)	f'c_8.5ksi	0.0000	11.6006	0.0000	0.0000	0.0000	0	Main Span
5	5	6	-	Beam	Truss Bottom Chord-31ft 8in_wide	(same as start)	f'c_8.5ksi	0.0000	11.5906	0.0000	0.0000	0.0000	0	Main Span
6	6	7	-	Beam	Truss Bottom Chord-31ft 8in_wide	(same as start)	f'c_8.5ksi	0.0000	1.5501	0.0000	0.0000	0.0000	0	Main Span
7	7	8	-	Beam	Truss Bottom Chord-31ft 8in_wide	(same as start)	f'c_8.5ksi	0.0000	.68	0.0000	0.0000	0.0000	0	Main Span
8	8	9	-	Beam	Truss Bottom Chord-31ft 8in_wide	(same as start)	f'c_8.5ksi	0.0000	4.9202	0.0000	0.0000	0.0000	0	Main Span
9	9	10	-	Beam	Truss Bottom Chord-31ft 8in_wide	(same as start)	f'c_8.5ksi	0.0000	12.3206	0.0000	0.0000	0.0000	0	Main Span
10	10	11	-	Beam	Truss Bottom Chord-31ft 8in_wide	(same as start)	f'c_8.5ksi	0.0000	12.3306	0.0000	0.0000	0.0000	0	Main Span
11	11	12	-	Beam	Truss Bottom Chord-31ft 8in_wide	(same as start)	f'c_8.5ksi	0.0000	1.6601	0.0000	0.0000	0.0000	0	Main Span
12	12	13	-	Beam	Truss Bottom Chord-31ft 8in_wide	(same as start)	f'c_8.5ksi	0.0000	.67	0.0000	0.0000	0.0000	0	Main Span
13	13	14	-	Beam	Truss Bottom Chord-31ft 8in_wide	(same as start)	f'c_8.5ksi	0.0000	4.2802	0.0000	0.0000	0.0000	0	Main Span
14	14	15	-	Beam	Truss Bottom Chord-31ft 8in_wide	(same as start)	f'c_8.5ksi	0.0000	13.4907	0.0000	0.0000	0.0000	0	Main Span
15	15	16	-	Beam	Truss Bottom Chord-31ft 8in_wide	(same as start)	f'c_8.5ksi	0.0000	13.4807	0.0000	0.0000	0.0000	0	Main Span
16	16	17	-	Beam	Truss Bottom Chord-31ft 8in_wide	(same as start)	f'c_8.5ksi	0.0000	1.5701	0.0000	0.0000	0.0000	0	Main Span
17	17	18	-	Beam	Truss Bottom Chord-31ft 8in_wide	(same as start)	f'c_8.5ksi	0.0000	.67	0.0000	0.0000	0.0000	0	Main Span
18	18	19	-	Beam	Truss Bottom Chord-31ft 8in_wide	(same as start)	f'c_8.5ksi	0.0000	3.4302	0.0000	0.0000	0.0000	0	Main Span
19	19	20	-	Beam	Truss Bottom Chord-31ft 8in_wide	(same as start)	f'c_8.5ksi	0.0000	14.6407	0.0000	0.0000	0.0000	0	Main Span
20	20	21	-	Beam	Truss Bottom Chord-31ft 8in_wide	(same as start)	f'c_8.5ksi	0.0000	14.6407	0.0000	0.0000	0.0000	0	Main Span
21	21	22	-	Beam	Truss Bottom Chord-31ft 8in_wide	(same as start)	f'c_8.5ksi	0.0000	2.5801	0.0000	0.0000	0.0000	0	Main Span
22	22	23	-	Beam	Truss Bottom Chord-31ft 8in_wide	(same as start)	f'c_8.5ksi	0.0000	.67	0.0000	0.0000	0.0000	0	Main Span

INPUT : Members

ID	I-Joint	J-Joint	Span	Type	Section at Start	Section at End	Material	Prestress Force (kips)	Length (ft)	Rigid Zone from Start (x/L)	Rigid Zone from End (x/L)	Orientation Angle (deg)	Castin g (day)	Structure Group
23	23	24	-	Beam	Truss Bottom Chord-31ft 8in_wide	(same as start)	f'c_8.5ksi	0.0000	2.3401	0.0000	0.0000	0.0000	0	Main Span
24	24	25	-	Beam	Truss Bottom Chord-31ft 8in_wide	(same as start)	f'c_8.5ksi	0.0000	15.6708	0.0000	0.0000	0.0000	0	Main Span
25	25	26	-	Beam	Truss Bottom Chord-31ft 8in_wide	(same as start)	f'c_8.5ksi	0.0000	15.6808	0.0000	0.0000	0.0000	0	Main Span
26	26	27	-	Beam	Truss Bottom Chord-31ft 8in_wide	(same as start)	f'c_8.5ksi	0.0000	4.0202	0.0000	0.0000	0.0000	0	Main Span
27	27	28	-	Beam	Truss Bottom Chord-31ft 8in_wide	(same as start)	f'c_8.5ksi	0.0000	.4792	0.0000	0.0000	0.0000	0	Main Span
28	28	29	-	Beam	Truss Bottom Chord-31ft 8in_wide	(same as start)	f'c_8.5ksi	0.0000	1.0009	0.0000	0.0000	0.0000	0	Main Span
60	60	1	-	Beam	Truss Bottom Chord-31ft 8in_wide	(same as start)	f'c_8.5ksi	0.0000	1.5001	0.0000	0.0000	0.0000	0	Main Span
101	101	102	-	Beam	Truss Top Chord-16ft wide	(same as start)	f'c_8.5ksi	0.0000	2.5001	0.0000	0.0000	0.0000	0	Main Span
102	102	103	-	Beam	Truss Top Chord-16ft wide	(same as start)	f'c_8.5ksi	0.0000	14.9507	0.0000	0.0000	0.0000	0	Main Span
103	103	104	-	Beam	Truss Top Chord-16ft wide	(same as start)	f'c_8.5ksi	0.0000	14.7591	0.0000	0.0000	0.0000	0	Main Span
104	104	105	-	Beam	Truss Top Chord-16ft wide	(same as start)	f'c_8.5ksi	0.0000	4.0819	0.0000	0.0000	0.0000	0	Main Span
105	105	106	-	Beam	Truss Top Chord-16ft wide	(same as start)	f'c_8.5ksi	0.0000	.43	0.0000	0.0000	0.0000	0	Main Span
106	106	107	-	Beam	Truss Top Chord-16ft wide	(same as start)	f'c_8.5ksi	0.0000	1.9364	0.0000	0.0000	0.0000	0	Main Span
107	107	108	-	Beam	Truss Top Chord-16ft wide	(same as start)	f'c_8.5ksi	0.0000	10.7543	0.0000	0.0000	0.0000	0	Main Span
108	108	109	-	Beam	Truss Top Chord-16ft wide	(same as start)	f'c_8.5ksi	0.0000	10.403	0.0000	0.0000	0.0000	0	Main Span
109	109	110	-	Beam	Truss Top Chord-16ft wide	(same as start)	f'c_8.5ksi	0.0000	3.6477	0.0000	0.0000	0.0000	0	Main Span
110	110	111	-	Beam	Truss Top Chord-16ft wide	(same as start)	f'c_8.5ksi	0.0000	.44	0.0000	0.0000	0.0000	0	Main Span
111	111	112	-	Beam	Truss Top Chord-16ft wide	(same as start)	f'c_8.5ksi	0.0000	1.7876	0.0000	0.0000	0.0000	0	Main Span
112	112	113	-	Beam	Truss Top Chord-16ft wide	(same as start)	f'c_8.5ksi	0.0000	11.103	0.0000	0.0000	0.0000	0	Main Span
113	113	114	-	Beam	Truss Top Chord-16ft wide	(same as start)	f'c_8.5ksi	0.0000	10.7835	0.0000	0.0000	0.0000	0	Main Span
114	114	115	-	Beam	Truss Top Chord-16ft wide	(same as start)	f'c_8.5ksi	0.0000	3.1072	0.0000	0.0000	0.0000	0	Main Span
115	115	116	-	Beam	Truss Top Chord-16ft wide	(same as start)	f'c_8.5ksi	0.0000	.46	0.0000	0.0000	0.0000	0	Main Span
116	116	117	-	Beam	Truss Top Chord-16ft wide	(same as start)	f'c_8.5ksi	0.0000	1.5893	0.0000	0.0000	0.0000	0	Main Span
117	117	118	-	Beam	Truss Top Chord-16ft wide	(same as start)	f'c_8.5ksi	0.0000	11.5514	0.0000	0.0000	0.0000	0	Main Span
118	118	119	-	Beam	Truss Top Chord-16ft wide	(same as start)	f'c_8.5ksi	0.0000	11.2831	0.0000	0.0000	0.0000	0	Main Span
119	119	120	-	Beam	Truss Top Chord-16ft wide	(same as start)	f'c_8.5ksi	0.0000	2.3876	0.0000	0.0000	0.0000	0	Main Span
120	120	121	-	Beam	Truss Top Chord-16ft wide	(same as start)	f'c_8.5ksi	0.0000	.5	0.0000	0.0000	0.0000	0	Main Span
121	121	122	-	Beam	Truss Top Chord-16ft wide	(same as start)	f'c_8.5ksi	0.0000	1.6855	0.0000	0.0000	0.0000	0	Main Span
122	122	123	-	Beam	Truss Top Chord-16ft wide	(same as start)	f'c_8.5ksi	0.0000	11.8652	0.0000	0.0000	0.0000	0	Main Span
123	123	124	-	Beam	Truss Top Chord-16ft wide	(same as start)	f'c_8.5ksi	0.0000	11.8652	0.0000	0.0000	0.0000	0	Main Span
124	124	125	-	Beam	Truss Top Chord-16ft wide	(same as start)	f'c_8.5ksi	0.0000	1.4755	0.0000	0.0000	0.0000	0	Main Span
125	125	126	-	Beam	Truss Top Chord-16ft wide	(same as start)	f'c_8.5ksi	0.0000	.54	0.0000	0.0000	0.0000	0	Main Span
126	126	127	-	Beam	Truss Top Chord-16ft wide	(same as start)	f'c_8.5ksi	0.0000	2.8076	0.0000	0.0000	0.0000	0	Main Span
127	127	128	-	Beam	Truss Top Chord-16ft wide	(same as start)	f'c_8.5ksi	0.0000	10.513	0.0000	0.0000	0.0000	0	Main Span

INPUT : Members

ID	I-Joint	J-Joint	Span	Type	Section at Start	Section at End	Material	Prestress Force (kips)	Length (ft)	Rigid Zone from Start (x/L)	Rigid Zone from End (x/L)	Orientation Angle (deg)	Castin g (day)	Structure Group
128	128	129	-	Beam	Truss Top Chord-16ft wide	(same as start)	f'c_8.5ksi	0.0000	10.6305	0.0000	0.0000	0.0000	0	Main Span
129	129	130	-	Beam	Truss Top Chord-16ft wide	(same as start)	f'c_8.5ksi	0.0000	.67	0.0000	0.0000	0.0000	0	Main Span
130	130	131	-	Beam	Truss Top Chord-16ft wide	(same as start)	f'c_8.5ksi	0.0000	.9994	0.0000	0.0000	0.0000	0	Main Span
131	131	132	-	Beam	Truss Top Chord-16ft wide	(same as start)	f'c_8.5ksi	0.0000	1.0009	0.0000	0.0000	0.0000	0	Main Span
162	163	101	-	Beam	Truss Top Chord-16ft wide	(same as start)	f'c_8.5ksi	0.0000	1.5001	0.0000	0.0000	0.0000	0	Main Span
400	28	400	-	Beam	Rigid Link	(same as start)	Rigid	0.0000	.6458	0.0000	0.0000	0.0000	0	Main Span
701	1000	701	-	Beam	South End Diagonal	(same as start)	f'c_8.5ksi	0.0000	1.5	0.0000	0.0000	0.0000	0	Main Span
702	701	702	-	Beam	South End Diagonal	(same as start)	f'c_8.5ksi	0.0000	13.1042	0.0000	0.0000	0.0000	0	Main Span
703	702	1001	-	Beam	South End Diagonal	(same as start)	f'c_8.5ksi	0.0000	1.0521	0.0000	0.0000	0.0000	0	Main Span
704	3	703	-	Beam	South End Diagonal	(same as start)	f'c_8.5ksi	0.0000	5.5007	0.0000	0.0000	0.0000	0	Main Span
705	703	704	-	Beam	South End Diagonal	(same as start)	f'c_8.5ksi	0.0000	29.1024	0.0000	0.0000	0.0000	0	Main Span
706	704	801	-	Beam	South End Diagonal	(same as start)	f'c_8.5ksi	0.0000	3.9439	0.0000	0.0000	0.0000	0	Main Span
707	7	705	-	Beam	Concrete Truss_diagonal	(same as start)	f'c_8.5ksi	0.0000	2.6026	0.0000	0.0000	0.0000	0	Main Span
708	705	706	-	Beam	Concrete Truss_diagonal	(same as start)	f'c_8.5ksi	0.0000	10.9641	0.0000	0.0000	0.0000	0	Main Span
709	706	801	-	Beam	Concrete Truss_diagonal	(same as start)	f'c_8.5ksi	0.0000	2.8398	0.0000	0.0000	0.0000	0	Main Span
710	8	707	-	Beam	Concrete Truss_diagonal	(same as start)	f'c_8.5ksi	0.0000	5.0032	0.0000	0.0000	0.0000	0	Main Span
711	707	708	-	Beam	Concrete Truss_diagonal	(same as start)	f'c_8.5ksi	0.0000	26.7166	0.0000	0.0000	0.0000	0	Main Span
712	708	802	-	Beam	Concrete Truss_diagonal	(same as start)	f'c_8.5ksi	0.0000	3.5638	0.0000	0.0000	0.0000	0	Main Span
713	12	709	-	Beam	Concrete Truss_diagonal	(same as start)	f'c_8.5ksi	0.0000	1.7817	0.0000	0.0000	0.0000	0	Main Span
714	709	710	-	Beam	Concrete Truss_diagonal	(same as start)	f'c_8.5ksi	0.0000	11.8244	0.0000	0.0000	0.0000	0	Main Span
715	710	802	-	Beam	Concrete Truss_diagonal	(same as start)	f'c_8.5ksi	0.0000	2.0038	0.0000	0.0000	0.0000	0	Main Span
716	13	711	-	Beam	Concrete Truss_diagonal	(same as start)	f'c_8.5ksi	0.0000	4.3685	0.0000	0.0000	0.0000	0	Main Span
717	711	712	-	Beam	Concrete Truss_diagonal	(same as start)	f'c_8.5ksi	0.0000	23.7603	0.0000	0.0000	0.0000	0	Main Span
718	712	803	-	Beam	Concrete Truss_diagonal	(same as start)	f'c_8.5ksi	0.0000	3.0907	0.0000	0.0000	0.0000	0	Main Span
719	17	713	-	Beam	Concrete Truss_diagonal	(same as start)	f'c_8.5ksi	0.0000	1.7634	0.0000	0.0000	0.0000	0	Main Span
720	713	714	-	Beam	Concrete Truss_diagonal	(same as start)	f'c_8.5ksi	0.0000	13.3331	0.0000	0.0000	0.0000	0	Main Span
721	714	803	-	Beam	Concrete Truss_diagonal	(same as start)	f'c_8.5ksi	0.0000	1.5302	0.0000	0.0000	0.0000	0	Main Span
722	18	715	-	Beam	Concrete Truss_diagonal	(same as start)	f'c_8.5ksi	0.0000	3.5653	0.0000	0.0000	0.0000	0	Main Span
723	715	716	-	Beam	Concrete Truss_diagonal	(same as start)	f'c_8.5ksi	0.0000	20.0922	0.0000	0.0000	0.0000	0	Main Span
724	716	804	-	Beam	Concrete Truss_diagonal	(same as start)	f'c_8.5ksi	0.0000	2.4646	0.0000	0.0000	0.0000	0	Main Span
725	22	717	-	Beam	Concrete Truss_diagonal	(same as start)	f'c_8.5ksi	0.0000	2.705	0.0000	0.0000	0.0000	0	Main Span
726	717	718	-	Beam	Concrete Truss_diagonal	(same as start)	f'c_8.5ksi	0.0000	16.6407	0.0000	0.0000	0.0000	0	Main Span
727	718	804	-	Beam	Concrete Truss_diagonal	(same as start)	f'c_8.5ksi	0.0000	1.8424	0.0000	0.0000	0.0000	0	Main Span
728	23	719	-	Beam	Concrete Truss_diagonal	(same as start)	f'c_8.5ksi	0.0000	2.4859	0.0000	0.0000	0.0000	0	Main Span

INPUT : Members

ID	I-Joint	J-Joint	Span	Type	Section at Start	Section at End	Material	Prestress Force (kips)	Length (ft)	Rigid Zone from Start (x/L)	Rigid Zone from End (x/L)	Orientation Angle (deg)	Castin g (day)	Structure Group
729	719	720	-	Beam	Concrete Truss_diagonal	(same as start)	f'c_8.5ksi	0.0000	15.8522	0.0000	0.0000	0.0000	0	Main Span
730	720	805	-	Beam	Concrete Truss_diagonal	(same as start)	f'c_8.5ksi	0.0000	1.6756	0.0000	0.0000	0.0000	0	Main Span
731	27	721	-	Beam	Concrete Truss_diagonal	(same as start)	f'c_8.5ksi	0.0000	4.0964	0.0000	0.0000	0.0000	0	Main Span
732	721	722	-	Beam	Concrete Truss_diagonal	(same as start)	f'c_8.5ksi	0.0000	22.6077	0.0000	0.0000	0.0000	0	Main Span
733	722	805	-	Beam	Concrete Truss_diagonal	(same as start)	f'c_8.5ksi	0.0000	2.903	0.0000	0.0000	0.0000	0	Main Span
734	400	723	-	Beam	Pylon End Diagonal	(same as start)	f'c_8.5ksi	0.0000	1.25	0.0000	0.0000	0.0000	0	Main Span
735	723	724	-	Beam	Pylon End Diagonal	(same as start)	f'c_8.5ksi	0.0000	13.0208	0.0000	0.0000	0.0000	0	Main Span
736	724	131	-	Beam	Pylon End Diagonal	(same as start)	f'c_8.5ksi	0.0000	.9162	0.0000	0.0000	0.0000	0	Main Span
800	801	106	-	Beam	Rigid Link	(same as start)	Rigid	0.0000	.5524	0.0000	0.0000	0.0000	0	Main Span
801	802	111	-	Beam	Rigid Link	(same as start)	Rigid	0.0000	.5038	0.0000	0.0000	0.0000	0	Main Span
802	803	116	-	Beam	Rigid Link	(same as start)	Rigid	0.0000	.455	0.0000	0.0000	0.0000	0	Main Span
803	804	121	-	Beam	Rigid Link	(same as start)	Rigid	0.0000	.379	0.0000	0.0000	0.0000	0	Main Span
804	805	126	-	Beam	Rigid Link	(same as start)	Rigid	0.0000	.293	0.0000	0.0000	0.0000	0	Main Span
810	801	105	-	Beam	Rigid Link	(same as start)	Rigid	0.0000	.2384	0.0000	0.0000	0.0000	0	Main Span
811	802	110	-	Beam	Rigid Link	(same as start)	Rigid	0.0000	.2183	0.0000	0.0000	0.0000	0	Main Span
812	803	115	-	Beam	Rigid Link	(same as start)	Rigid	0.0000	.2401	0.0000	0.0000	0.0000	0	Main Span
813	804	120	-	Beam	Rigid Link	(same as start)	Rigid	0.0000	.2954	0.0000	0.0000	0.0000	0	Main Span
814	805	125	-	Beam	Rigid Link	(same as start)	Rigid	0.0000	.4224	0.0000	0.0000	0.0000	0	Main Span

INPUT : Tendons

Tendon Name	Desig n Grou	Material	Expo sure	Strand Area (per strand)	# of Stran ds	Jacking Force @ Start	Jacking Force @ End (kips)	Jacking End	Anchor Set (ft)	Wobble Coefficien t	Curvature Friction Coefficien	Peak Stress Ratio -	Peak Stress Ratio -	Elongat ion After	Elongat ion After	Elongat ion @ Left of	Elongat ion @ Right of
Main Deck T1-L	(none	Steel PT	Post-	0.0015	12	527.2929	0	Start	0.0313	0.0002	0.2500	0.7000	0.7400	0	0	0	0
Main Deck T1-R	(none	Steel PT	Post-	0.0015	12	527.2929	0	Start	0.0313	0.0002	0.2500	0.7000	0.7400	0	0	0	0
Main Deck T2-L	(none	Steel PT	Post-	0.0015	19	834.8804	0	Start	0.0313	0.0002	0.2500	0.7000	0.7400	0	0	0	0
Main Deck T2-R	(none	Steel PT	Post-	0.0015	19	834.8804	0	Start	0.0313	0.0002	0.2500	0.7000	0.7400	0	0	0	0
Main Deck T3-L	(none	Steel PT	Post-	0.0015	19	834.8804	0	Start	0.0313	0.0002	0.2500	0.7000	0.7400	0	0	0	0
Main Deck T3-R	(none	Steel PT	Post-	0.0015	19	834.8804	0	Start	0.0313	0.0002	0.2500	0.7000	0.7400	0	0	0	0
Main Deck T4-L	(none	Steel PT	Post-	0.0015	19	834.8804	0	Start	0.0313	0.0002	0.2500	0.7000	0.7400	0	0	0	0
Main Deck T4-R	(none	Steel PT	Post-	0.0015	19	834.8804	0	Start	0.0313	0.0002	0.2500	0.7000	0.7400	0	0	0	0
Main Deck T5-L	(none	Steel PT	Post-	0.0015	19	834.8804	0	Start	0.0313	0.0002	0.2500	0.7000	0.7400	0	0	0	0
Main Deck T5-R	(none	Steel PT	Post-	0.0015	19	834.8804	0	Start	0.0313	0.0002	0.2500	0.7000	0.7400	0	0	0	0
Main Deck T6-L	(none	Steel PT	Post-	0.0015	19	834.8804	0	Start	0.0313	0.0002	0.2500	0.7000	0.7400	0	0	0	0

INPUT : Tendons

Tendon Name	Design Grou	Material	Exposure	Strand Area (per strand)	# of Strands	Jacking Force @ Start	Jacking Force @ End (kips)	Jacking End	Anchor Set (ft)	Wobble Coefficient	Curvature Friction Coefficien	Peak Stress Ratio -	Peak Stress Ratio -	Elongation After	Elongation After	Elongation @ Left of	Elongation @ Right of
Main Deck T6-R	(none	Steel PT	Post-	0.0015	19	834.8804	0	Start	0.0313	0.0002	0.2500	0.7000	0.7400	0	0	0	0
Main Canopy C3-L	(none	Steel PT	Post-	0.0015	12	530.6343	0	Start	0.0313	0.0002	0.2500	0.7000	0.7400	0	0	0	0
Main Canopy C3-R	(none	Steel PT	Post-	0.0015	12	530.6343	0	Start	0.0313	0.0002	0.2500	0.7000	0.7400	0	0	0	0
Main Canopy C4-L	(none	Steel PT	Post-	0.0015	12	533.8417	0	Start	0.0313	0.0002	0.2500	0.7000	0.7400	0	0	0	0
Main Canopy C4-R	(none	Steel PT	Post-	0.0015	12	533.8417	0	Start	0.0313	0.0002	0.2500	0.7000	0.7400	0	0	0	0

INPUT : More Material Properties

Name	Yield Stress (kips/ft²)	Post-yield to Initial Slope Ratio	Concrete Strength Specimen	Concrete fc28 or Steel Fu (kips/ft²)	Concrete Cement Hardening Type	Tendon GUTS (kips/ft²)	Material Time-Effect	Assigned
Rigid	0.00	0.020	Cylinder	0.00	Not Concrete	0.00	(NONE)	Yes
Steel Pipe	19,440.00	0.020	Cylinder	0.00	Not Concrete	0.00	(NONE)	No
Steel PT	34,992.00	0.020	Cylinder	0.00	Not Concrete	38,880.00	steel	Yes
f'c_5.5	0.00	0.020	Cylinder	792.00	Not Concrete	0.00	(NONE)	No
f'c_8.5ksi	0.00	0.020	Cylinder	1,224.00	Normal	0.00	concrete	Yes

Load Cases

ID	Name	Analysis Type	Class	Status	Weight Factor X	Weight Factor Y	Weight Factor Z	Is Dynamic Mass?	Assigned to Load Combinati	# of Joint Loads	# of Support Loads	# of Member Loads	# of Member Thermal	# of Plate Loads	# of Moving Loads	# of THA Loading	# of THA Initial
1	SW	Static	Dead Load	Active	0.0000	0.0000	-1.0000	No	Yes	0	0	0	0	0	0	0	0
2	DW_utilities	Static	None	Active	0.0000	0.0000	0.0000	No	Yes	0	0	27	0	0	0	0	0
3	LL1_Deck	Static	None	Active	0.0000	0.0000	0.0000	No	No	0	0	27	0	0	0	0	0
4	LL2_Deck	Static	None	Active	0.0000	0.0000	0.0000	No	No	0	0	27	0	0	0	0	0
5	LL3_Deck	Static	None	Active	0.0000	0.0000	0.0000	No	No	0	0	0	0	0	0	0	0
6	LL1_Roof	Static	None	Active	0.0000	0.0000	0.0000	No	No	0	0	30	0	0	0	0	0
7	LL2_Roof	Static	None	Active	0.0000	0.0000	0.0000	No	No	0	0	30	0	0	0	0	0
8	LL3_Roof	Static	None	Active	0.0000	0.0000	0.0000	No	No	0	0	0	0	0	0	0	0
9	WS_0 deg	Static	None	Active	0.0000	0.0000	0.0000	No	Yes	0	0	122	0	0	0	0	0
11	WS_60 deg	Static	None	Active	0.0000	0.0000	0.0000	No	No	0	0	207	0	0	0	0	0
13	WUP	Static	None	Active	0.0000	0.0000	0.0000	No	Yes	0	0	114	0	0	0	0	0
14	WS_-60 deg	Static	None	Active	0.0000	0.0000	0.0000	No	No	0	0	207	0	0	0	0	0
16	TU+	Static	None	Active	0.0000	0.0000	0.0000	No	Yes	0	0	0	90	0	0	0	0
17	TU-	Static	None	Active	0.0000	0.0000	0.0000	No	No	0	0	0	90	0	0	0	0
18	DC3	Static	Dead Load of	Active	0.0000	0.0000	0.0000	No	Yes	0	0	27	0	0	0	0	0

Load Cases

ID	Name	Analysis Type	Class	Status	Weight Factor X	Weight Factor Y	Weight Factor Z	Is Dynamic Mass?	Assigned to Load Combinati	# of Joint Loads	# of Support Loads	# of Member Loads	# of Member Thermal	# of Plate Loads	# of Moving Loads	# of THA Loading	# of THA Initial
19	Temp.	Static	None	Active	0.0000	0.0000	0.0000	No	Yes	0	0	0	0	0	0	0	0
20	WS_45 deg	Static	None	Active	0.0000	0.0000	0.0000	No	Yes	0	0	207	0	0	0	0	0
21	WS_30 deg	Static	None	Active	0.0000	0.0000	0.0000	No	No	0	0	207	0	0	0	0	0
22	WS_15 deg	Static	None	Active	0.0000	0.0000	0.0000	No	No	0	0	207	0	0	0	0	0
23	WS_-45 deg	Static	None	Active	0.0000	0.0000	0.0000	No	No	0	0	207	0	0	0	0	0
24	WS_-30 deg	Static	None	Active	0.0000	0.0000	0.0000	No	No	0	0	207	0	0	0	0	0
25	WS_-15 deg	Static	None	Active	0.0000	0.0000	0.0000	No	No	0	0	207	0	0	0	0	0
26	LL1_Deck_Offs	Static	None	Active	0.0000	0.0000	0.0000	No	Yes	0	0	54	0	0	0	0	0
27	LL2_Deck_Offs	Static	None	Active	0.0000	0.0000	0.0000	No	No	0	0	54	0	0	0	0	0
28	LL3_Deck_Offs	Static	None	Active	0.0000	0.0000	0.0000	No	No	0	0	0	0	0	0	0	0
29	CT_0 deg	Static	None	Active	0.0000	0.0000	0.0000	No	No	0	0	0	0	0	0	0	0
30	CT_15 deg	Static	None	Active	0.0000	0.0000	0.0000	No	No	0	0	0	0	0	0	0	0
31	WS_0	Static	None	Active	0.0000	0.0000	0.0000	No	No	0	0	122	0	0	0	0	0
32	WS_60	Static	None	Active	0.0000	0.0000	0.0000	No	No	0	0	207	0	0	0	0	0
33	WS_45	Static	None	Active	0.0000	0.0000	0.0000	No	No	0	0	207	0	0	0	0	0
34	WS_30	Static	None	Active	0.0000	0.0000	0.0000	No	No	0	0	207	0	0	0	0	0
35	WS_15	Static	None	Active	0.0000	0.0000	0.0000	No	No	0	0	207	0	0	0	0	0
36	WS_-60	Static	None	Active	0.0000	0.0000	0.0000	No	No	0	0	207	0	0	0	0	0
37	WS_-45	Static	None	Active	0.0000	0.0000	0.0000	No	No	0	0	207	0	0	0	0	0
38	WS_-30	Static	None	Active	0.0000	0.0000	0.0000	No	No	0	0	207	0	0	0	0	0
39	WS_-15	Static	None	Active	0.0000	0.0000	0.0000	No	No	0	0	207	0	0	0	0	0
40	DC2_Main	Static	Dead Load	Active	0.0000	0.0000	0.0000	No	Yes	4	0	22	0	0	0	0	0
41	DC2_Back	Static	Dead Load	Active	0.0000	0.0000	0.0000	No	Yes	2	0	0	0	0	0	0	0

LOAD CASE DC2_Main Span, Member Loads

Member	Type	Direction	Magnitude at Start (kips or kips-ft)	Magnitude at End (kips or kips-ft)	Start Position (x/L)	End Position from start (x/L)
104	Uniform Force	Global Z	-0.6020		0.4100	1.0000
105	Uniform Force	Global Z	-0.6020		0.0000	1.0000
106	Uniform Force	Global Z	-0.6020		0.0000	1.0000
107	Uniform Force	Global Z	-0.6020		0.0000	0.6800
109	Uniform Force	Global Z	-0.6020		0.3000	1.0000
110	Uniform Force	Global Z	-0.6020		0.0000	1.0000

LOAD CASE DC2 Main Span, Member Loads

Member	Type	Direction	Magnitude at Start (kips or kips-ft)	Magnitude at End (kips or kips-ft)	Start Position (x/L)	End Position from start (x/L)
111	Uniform Force	Global Z	-0.6020		0.0000	1.0000
112	Uniform Force	Global Z	-0.6020		0.0000	0.6500
113	Uniform Force	Global Z	-0.6020		0.8900	1.0000
114	Uniform Force	Global Z	-0.6020		0.0000	1.0000
115	Uniform Force	Global Z	-0.6020		0.0000	1.0000
116	Uniform Force	Global Z	-0.6020		0.0000	1.0000
117	Uniform Force	Global Z	-0.6020		0.0000	0.4900
119	Uniform Force	Global Z	-0.5830		0.0000	1.0000
120	Uniform Force	Global Z	-0.5830		0.0000	1.0000
121	Uniform Force	Global Z	-0.5830		0.0000	1.0000
122	Uniform Force	Global Z	-0.5830		0.0000	0.4100
123	Uniform Force	Global Z	-0.5830		0.8800	1.0000
124	Uniform Force	Global Z	-0.5830		0.0000	1.0000
125	Uniform Force	Global Z	-0.5830		0.0000	1.0000
126	Uniform Force	Global Z	-0.5830		0.0000	1.0000
127	Uniform Force	Global Z	-0.5830		0.0000	0.2800

LOAD CASE DC2_Main Span, Joint Loads

Joint	X-Force (kips)	Y-Force (kips)	Z-Force (kips)	X-Moment (kips-ft)	Y-Moment (kips-ft)	Z-Moment (kips-ft)
2	0.0000	0.0000	-24.3000	0.0000	0.0000	0.0000
28	0.0000	0.0000	-13.9000	0.0000	0.0000	0.0000
101	0.0000	0.0000	-9.1000	0.0000	0.0000	0.0000
131	0.0000	0.0000	-6.5000	0.0000	0.0000	0.0000

LOAD CASE DC2_Back Span, Joint Loads

Joint	X-Force (kips)	Y-Force (kips)	Z-Force (kips)	X-Moment (kips-ft)	Y-Moment (kips-ft)	Z-Moment (kips-ft)
29	0.0000	0.0000	-21.0000	0.0000	0.0000	0.0000
132	0.0000	0.0000	-10.7000	0.0000	0.0000	0.0000

Stage Summary

Stage 1 'Stage 2' Day = 28 Temp = 70°F Rel Hum = 75 %

Step 1 : Erect Main Span

Construct Structure Groups

Main Span

NO Support Activity.

Slave / Master Activity

1 1 1 1 NONE NONE NONE

2 101 101 101 NONE NONE NONE

NO Tendon Activity.

NO Displacement Initialization Activity.

Load Activity

1 SW 1

40 DC2_Main Span 1

Step 2 : Fix Joints

No Construction activity

NO Support Activity.

Slave / Master Activity

1 1 1 1 1 1 1

2 101 101 101 101 101 101 101

NO Tendon Activity.

NO Displacement Initialization Activity.

NO Load Activity.

Step 3 : Stress Deck PT

No Construction activity

NO Support Activity.

NO Slave/Master Activity.

Tendon Activity

Main Deck T1-L Stress

Main Deck T1-R Stress

Main Deck T2-L Stress

Main Deck T2-R Stress

Main Deck T3-L Stress

Main Deck T3-R Stress

Main Deck T4-L Stress

Main Deck T4-R Stress

Main Deck T5-L Stress

Main Deck T5-R Stress

Main Deck T6-L Stress

Main Deck T6-R Stress

NO Displacement Initialization Activity.

NO Load Activity.

Step 4 : Stress Canopy PT

No Construction activity

NO Support Activity.

NO Slave/Master Activity.

Tendon Activity

Main Canopy C3-L Stress

Main Canopy C3-R Stress

Main Canopy C4-L Stress

Main Canopy C4-R Stress

NO Displacement Initialization Activity.

NO Load Activity.

Result Cases Summary

Stage 2: Stage 2: Stress Canopy PT
Solved: 9/19/2016

Load Class: Prestress Load

RESULT : Member Stresses

Member	Station	Result Case	(P/A) @ Centroid (kips/ft²)	Normal Stress @ Point 1 (kips/ft²)	Normal Stress @ Point 2 (kips/ft²)	Normal Stress @ Point 3 (kips/ft²)	Normal Stress @ Point 4 (kips/ft²)	Normal Stress @ Point 5 (kips/ft²)	Normal Stress @ Point 6 (kips/ft²)	Max ABS Total Stress (kips/ft²)	Shear Stress Y (kips/ft²)	Shear Stress Z (kips/ft²)
1	0	Stage 2: Stage 2:	-182.3788	-64.6867	-64.6867	-165.1673	-165.1673	-100.4581	-359.3049	-359.3049	0.0000	18.4516
1	1	Stage 2: Stage 2:	-182.3828	-72.5673	-72.5673	-166.3232	-166.3232	-105.9447	-347.4680	-347.4680	0.0000	18.4333
1	2	Stage 2: Stage 2:	-182.3867	-80.4402	-80.4402	-167.4779	-167.4779	-111.4259	-335.6426	-335.6426	0.0000	18.4150
2	0	Stage 2: Stage 2:	-182.3783	-80.4318	-80.4318	-167.4695	-167.4695	-111.4175	-335.6342	-335.6342	0.0000	17.9143
2	1	Stage 2: Stage 2:	-182.3942	-107.1794	-107.1794	-171.3947	-171.3947	-130.0402	-295.4646	-295.4646	0.0000	17.8505
2	2	Stage 2: Stage 2:	-182.4143	-133.8370	-133.8370	-175.3103	-175.3103	-148.6017	-255.4405	-255.4405	0.0000	17.7872

RESULT : Member Stresses

Member	Station	Result Case	(P/A) @ Centroid (kips/ft²)	Normal Stress @ Point 1 (kips/ft²)	Normal Stress @ Point 2 (kips/ft²)	Normal Stress @ Point 3 (kips/ft²)	Normal Stress @ Point 4 (kips/ft²)	Normal Stress @ Point 5 (kips/ft²)	Normal Stress @ Point 6 (kips/ft²)	Max ABS Total Stress (kips/ft²)	Shear Stress Y (kips/ft²)	Shear Stress Z (kips/ft²)
3	0	Stage 2: Stage 2:	-190.2935	-146.3819	-146.3819	-183.8718	-183.8718	-159.7284	-256.3056	-256.3056	0.0000	20.9798
3	1	Stage 2: Stage 2:	-197.0787	-219.7804	-219.7804	-200.3986	-200.3986	-212.8804	-162.9513	-219.7804	0.0000	0.5134
3	2	Stage 2: Stage 2:	-197.1767	-222.7500	-222.7500	-200.9165	-200.9165	-214.9772	-158.7324	-222.7500	0.0000	0.1072
4	0	Stage 2: Stage 2:	-197.1767	-222.7500	-222.7500	-200.9165	-200.9165	-214.9772	-158.7324	-222.7500	0.0000	0.1127
4	1	Stage 2: Stage 2:	-197.4099	-216.5936	-216.5936	-200.2154	-200.2154	-210.7629	-168.5712	-216.5936	0.0000	-0.7573
4	2	Stage 2: Stage 2:	-197.6229	-193.1696	-193.1696	-196.9717	-196.9717	-194.5231	-204.3176	-204.3176	0.0000	-1.6273
5	0	Stage 2: Stage 2:	-197.6229	-193.1696	-193.1696	-196.9717	-196.9717	-194.5231	-204.3176	-204.3176	0.0000	-1.6273
5	1	Stage 2: Stage 2:	-197.8556	-152.5605	-152.5605	-191.2316	-191.2316	-166.3276	-265.9477	-265.9477	0.0000	-2.4966
5	2	Stage 2: Stage 2:	-198.0682	-94.7136	-94.7136	-182.9534	-182.9534	-126.1273	-353.4408	-353.4408	0.0000	-3.3658
6	0	Stage 2: Stage 2:	-198.0682	-94.7136	-94.7136	-182.9534	-182.9534	-126.1273	-353.4408	-353.4408	0.0000	-3.3658
6	1	Stage 2: Stage 2:	-198.0849	-85.6604	-85.6604	-181.6438	-181.6438	-119.8308	-367.0923	-367.0923	0.0000	-3.4821
6	2	Stage 2: Stage 2:	-198.1256	-76.3232	-76.3232	-180.3130	-180.3130	-113.3439	-381.2307	-381.2307	0.0000	-3.5983
7	0	Stage 2: Stage 2:	-196.5117	-81.5532	-81.5532	-179.7000	-179.7000	-116.4938	-369.3284	-369.3284	0.0000	9.5867
7	1	Stage 2: Stage 2:	-196.5231	-92.6760	-92.6760	-181.3363	-181.3363	-124.2394	-352.6361	-352.6361	0.0000	9.5357
7	2	Stage 2: Stage 2:	-196.5385	-103.7436	-103.7436	-182.9680	-182.9680	-131.9477	-336.0369	-336.0369	0.0000	9.4847
8	0	Stage 2: Stage 2:	-183.7641	-97.6366	-97.6366	-171.1687	-171.1687	-123.8143	-313.2393	-313.2393	0.0000	2.9462
8	1	Stage 2: Stage 2:	-183.8739	-120.9678	-120.9678	-174.6744	-174.6744	-140.0875	-278.4404	-278.4404	0.0000	2.5772
8	2	Stage 2: Stage 2:	-183.9517	-141.1644	-141.1644	-177.6944	-177.6944	-154.1692	-248.2737	-248.2737	0.0000	2.2082
9	0	Stage 2: Stage 2:	-183.9518	-141.1645	-141.1645	-177.6945	-177.6945	-154.1693	-248.2738	-248.2738	0.0000	2.2030
9	1	Stage 2: Stage 2:	-184.1830	-178.0522	-178.0522	-183.2865	-183.2865	-179.9156	-193.3995	-193.3995	0.0000	1.2790
9	2	Stage 2: Stage 2:	-184.4219	-195.4926	-195.4926	-186.0409	-186.0409	-192.1278	-167.7794	-195.4926	0.0000	0.3550
10	0	Stage 2: Stage 2:	-184.4219	-195.4926	-195.4926	-186.0409	-186.0409	-192.1278	-167.7794	-195.4926	0.0000	0.3565
10	1	Stage 2: Stage 2:	-184.6526	-193.4917	-193.4917	-185.9453	-185.9453	-190.8051	-171.3649	-193.4917	0.0000	-0.5683
10	2	Stage 2: Stage 2:	-184.8949	-172.0158	-172.0158	-183.0114	-183.0114	-175.9303	-204.2559	-204.2559	0.0000	-1.4930
11	0	Stage 2: Stage 2:	-184.8949	-172.0158	-172.0158	-183.0114	-183.0114	-175.9303	-204.2559	-204.2559	0.0000	-1.4930
11	1	Stage 2: Stage 2:	-184.9114	-167.6201	-167.6201	-182.3827	-182.3827	-172.8756	-210.9054	-210.9054	0.0000	-1.6175
11	2	Stage 2: Stage 2:	-184.9557	-162.8989	-162.8989	-181.7301	-181.7301	-169.6028	-218.1136	-218.1136	0.0000	-1.7420
12	0	Stage 2: Stage 2:	-185.0071	-159.7389	-159.7389	-181.3119	-181.3119	-167.4190	-222.9927	-222.9927	0.0000	2.9833
12	1	Stage 2: Stage 2:	-185.0185	-163.1375	-163.1375	-181.8186	-181.8186	-169.7881	-217.9120	-217.9120	0.0000	2.9330
12	2	Stage 2: Stage 2:	-185.0338	-166.4825	-166.4825	-182.3208	-182.3208	-172.1210	-212.9218	-212.9218	0.0000	2.8828
13	0	Stage 2: Stage 2:	-184.1062	-164.1038	-164.1038	-181.1810	-181.1810	-170.1833	-214.1759	-214.1759	0.0000	2.2387
13	1	Stage 2: Stage 2:	-184.1841	-179.3830	-179.3830	-183.4820	-183.4820	-180.8423	-191.4016	-191.4016	0.0000	1.9177
13	2	Stage 2: Stage 2:	-184.2699	-192.3221	-192.3221	-185.4474	-185.4474	-189.8747	-172.1650	-192.3221	0.0000	1.5967
14	0	Stage 2: Stage 2:	-184.2698	-192.3221	-192.3221	-185.4474	-185.4474	-189.8747	-172.1649	-192.3221	0.0000	1.5981

RESULT : Member Stresses

Member	Station	Result Case	(P/A) @ Centroid (kips/ft²)	Normal Stress @ Point 1 (kips/ft²)	Normal Stress @ Point 2 (kips/ft²)	Normal Stress @ Point 3 (kips/ft²)	Normal Stress @ Point 4 (kips/ft²)	Normal Stress @ Point 5 (kips/ft²)	Normal Stress @ Point 6 (kips/ft²)	Max ABS Total Stress (kips/ft²)	Shear Stress Y (kips/ft²)	Shear Stress Z (kips/ft²)
14	1	Stage 2: Stage 2:	-184.5303	-217.7632	-217.7632	-189.3903	-189.3903	-207.6623	-134.5715	-217.7632	0.0000	0.5863
14	2	Stage 2: Stage 2:	-184.7786	-219.8666	-219.8666	-189.9099	-189.9099	-209.2019	-132.0310	-219.8666	0.0000	-0.4254
15	0	Stage 2: Stage 2:	-184.7786	-219.8666	-219.8666	-189.9099	-189.9099	-209.2019	-132.0310	-219.8666	0.0000	-0.4281
15	1	Stage 2: Stage 2:	-185.0383	-198.6173	-198.6173	-187.0242	-187.0242	-194.4901	-164.6251	-198.6173	0.0000	-1.4391
15	2	Stage 2: Stage 2:	-185.2899	-154.0689	-154.0689	-180.7241	-180.7241	-163.5582	-232.2243	-232.2243	0.0000	-2.4501
16	0	Stage 2: Stage 2:	-185.2899	-154.0689	-154.0689	-180.7241	-180.7241	-163.5582	-232.2243	-232.2243	0.0000	-2.4488
16	1	Stage 2: Stage 2:	-185.3064	-147.3569	-147.3569	-179.7566	-179.7566	-158.8913	-242.3557	-242.3557	0.0000	-2.5665
16	2	Stage 2: Stage 2:	-185.3504	-140.3566	-140.3566	-178.7704	-178.7704	-154.0321	-252.9895	-252.9895	0.0000	-2.6843
17	0	Stage 2: Stage 2:	-186.2821	-153.8028	-153.8028	-181.5323	-181.5323	-163.6746	-235.1081	-235.1081	0.0000	-4.0626
17	1	Stage 2: Stage 2:	-186.2934	-149.1334	-149.1334	-180.8590	-180.8590	-160.4278	-242.1559	-242.1559	0.0000	-4.1129
17	2	Stage 2: Stage 2:	-186.3086	-144.4104	-144.4104	-180.1813	-180.1813	-157.1450	-249.2940	-249.2940	0.0000	-4.1631
18	0	Stage 2: Stage 2:	-194.9690	-153.6753	-153.6753	-188.9301	-188.9301	-166.2261	-257.0458	-257.0458	0.0000	2.2218
18	1	Stage 2: Stage 2:	-195.0470	-166.0232	-166.0232	-190.8025	-190.8025	-174.8447	-238.6783	-238.6783	0.0000	1.9645
18	2	Stage 2: Stage 2:	-195.0974	-176.8357	-176.8357	-192.4268	-192.4268	-182.3862	-222.5503	-222.5503	0.0000	1.7073
19	0	Stage 2: Stage 2:	-195.0974	-176.8357	-176.8357	-192.4268	-192.4268	-182.3862	-222.5503	-222.5503	0.0000	1.7073
19	1	Stage 2: Stage 2:	-195.3867	-206.1053	-206.1053	-196.9542	-196.9542	-202.8475	-179.2734	-206.1053	0.0000	0.6093
19	2	Stage 2: Stage 2:	-195.6480	-207.8750	-207.8750	-197.4361	-197.4361	-204.1587	-177.2672	-207.8750	0.0000	-0.4887
20	0	Stage 2: Stage 2:	-195.6480	-207.8750	-207.8750	-197.4361	-197.4361	-204.1587	-177.2672	-207.8750	0.0000	-0.4887
20	1	Stage 2: Stage 2:	-195.9364	-182.1998	-182.1998	-193.9275	-193.9275	-186.3749	-216.5865	-216.5865	0.0000	-1.5867
20	2	Stage 2: Stage 2:	-196.2008	-129.0287	-129.0287	-186.3775	-186.3775	-149.4450	-297.1805	-297.1805	0.0000	-2.6847
21	0	Stage 2: Stage 2:	-196.2008	-129.0287	-129.0287	-186.3775	-186.3775	-149.4450	-297.1805	-297.1805	0.0000	-2.6847
21	1	Stage 2: Stage 2:	-196.2477	-116.8113	-116.8113	-184.6308	-184.6308	-140.9553	-315.6641	-315.6641	0.0000	-2.8782
21	2	Stage 2: Stage 2:	-196.2945	-103.7408	-103.7408	-182.7593	-182.7593	-131.8716	-335.4303	-335.4303	0.0000	-3.0717
22	0	Stage 2: Stage 2:	-204.2183	-111.6094	-111.6094	-190.6750	-190.6750	-139.7570	-343.4369	-343.4369	0.0000	-11.7384
22	1	Stage 2: Stage 2:	-204.2295	-98.1508	-98.1508	-188.7164	-188.7164	-130.3925	-363.6971	-363.6971	0.0000	-11.7886
22	2	Stage 2: Stage 2:	-204.2446	-84.6387	-84.6387	-186.7532	-186.7532	-120.9918	-384.0478	-384.0478	0.0000	-11.8389
23	0	Stage 2: Stage 2:	-199.7865	-79.0306	-79.0306	-182.1270	-182.1270	-115.7332	-381.3186	-381.3186	0.0000	3.7388
23	1	Stage 2: Stage 2:	-199.8335	-93.6783	-93.6783	-184.3092	-184.3092	-125.9432	-359.4164	-359.4164	0.0000	3.5633
23	2	Stage 2: Stage 2:	-199.8727	-107.6164	-107.6164	-186.3810	-186.3810	-135.6568	-338.5614	-338.5614	0.0000	3.3878
24	0	Stage 2: Stage 2:	-199.8727	-107.6164	-107.6164	-186.3810	-186.3810	-135.6568	-338.5614	-338.5614	0.0000	3.3878
24	1	Stage 2: Stage 2:	-200.1591	-182.8910	-182.8910	-197.6338	-197.6338	-188.1395	-226.1181	-226.1181	0.0000	2.2125
24	2	Stage 2: Stage 2:	-200.1961	-226.4428	-226.4428	-204.0345	-204.0345	-218.4653	-160.7395	-226.4428	0.0000	1.0373
25	0	Stage 2: Stage 2:	-200.1961	-226.4428	-226.4428	-204.0345	-204.0345	-218.4653	-160.7395	-226.4428	0.0000	1.0373
25	1	Stage 2: Stage 2:	-199.8872	-238.1727	-238.1727	-205.4861	-205.4861	-226.5361	-142.3327	-238.1727	0.0000	-0.1387

RESULT : Member Stresses

Member	Station	Result Case	(P/A) @ Centroid (kips/ft²)	Normal Stress @ Point 1 (kips/ft²)	Normal Stress @ Point 2 (kips/ft²)	Normal Stress @ Point 3 (kips/ft²)	Normal Stress @ Point 4 (kips/ft²)	Normal Stress @ Point 5 (kips/ft²)	Normal Stress @ Point 6 (kips/ft²)	Max ABS Total Stress (kips/ft²)	Shear Stress Y (kips/ft²)	Shear Stress Z (kips/ft²)
25	2	Stage 2: Stage 2:	-199.5632	-218.3737	-218.3737	-202.3141	-202.3141	-212.6564	-171.2853	-218.3737	0.0000	-1.3147
26	0	Stage 2: Stage 2:	-199.5632	-218.3737	-218.3737	-202.3141	-202.3141	-212.6564	-171.2853	-218.3737	0.0000	-1.3147
26	1	Stage 2: Stage 2:	-199.4865	-208.2288	-208.2288	-200.7650	-200.7650	-205.5716	-186.3444	-208.2288	0.0000	-1.6162
26	2	Stage 2: Stage 2:	-195.8174	-134.2558	-134.2558	-186.8145	-186.8145	-152.9669	-288.3627	-288.3627	0.0000	-14.4832
27	0	Stage 2: Stage 2:	-190.3157	-133.4084	-133.4084	-181.9934	-181.9934	-150.7048	-275.8642	-275.8642	0.0000	-11.0925
27	1	Stage 2: Stage 2:	-190.3075	-124.3046	-124.3046	-180.6551	-180.6551	-144.3656	-289.5294	-289.5294	0.0000	-11.1279
27	2	Stage 2: Stage 2:	-190.2954	-115.1700	-115.1700	-179.3090	-179.3090	-138.0037	-303.2313	-303.2313	0.0000	-11.1631
28	0	Stage 2: Stage 2:	-189.9290	-110.9373	-110.9373	-178.3771	-178.3771	-134.9461	-308.6769	-308.6769	0.0000	-12.4139
28	1	Stage 2: Stage 2:	-189.9087	-89.6299	-89.6299	-175.2438	-175.2438	-120.1087	-340.6576	-340.6576	0.0000	-12.4877
28	2	Stage 2: Stage 2:	0.0000	0.0000	0.0000	0.0000	0.0000	0.0000	0.0000	0.0000	0.0000	0.0000
60	0	Stage 2: Stage 2:	0.0000	0.0000	0.0000	0.0000	0.0000	0.0000	0.0000	0.0000	0.0000	0.0000
60	1	Stage 2: Stage 2:	-181.8935	6.8152	6.8152	-154.2964	-154.2964	-50.5411	-465.5788	-465.5788	0.0000	19.9404
60	2	Stage 2: Stage 2:	-181.9131	-44.1624	-44.1624	-161.7682	-161.7682	-86.0304	-388.9934	-388.9934	0.0000	19.8302
101	0	Stage 2: Stage 2:	-105.4160	-238.7388	-238.7388	40.9605	40.9605	-209.0283	-77.9710	-238.7388	0.0000	-9.8494
101	1	Stage 2: Stage 2:	-107.0449	-171.3807	-171.3807	-36.4099	-36.4099	-157.0437	-93.8011	-171.3807	0.0000	-5.8318
101	2	Stage 2: Stage 2:	-109.7415	-162.3384	-162.3384	-51.9949	-51.9949	-150.6174	-98.9142	-162.3384	0.0000	1.9235
102	0	Stage 2: Stage 2:	-109.7415	-162.3384	-162.3384	-51.9949	-51.9949	-150.6174	-98.9142	-162.3384	0.0000	1.9235
102	1	Stage 2: Stage 2:	-110.7492	-222.5388	-222.5388	11.9859	11.9859	-197.6268	-87.7368	-222.5388	0.0000	-0.5829
102	2	Stage 2: Stage 2:	-111.9813	-169.7586	-169.7586	-48.5470	-48.5470	-156.8831	-100.0876	-169.7586	0.0000	-1.7195
103	0	Stage 2: Stage 2:	-111.9811	-169.7584	-169.7584	-48.5468	-48.5468	-156.8829	-100.0874	-169.7584	0.0000	-1.7341
103	1	Stage 2: Stage 2:	-114.4904	-110.7124	-110.7124	-118.6383	-118.6383	-111.5543	-115.2681	-118.6383	0.0000	-1.4409
103	2	Stage 2: Stage 2:	-114.6601	-19.1970	-19.1970	-219.4700	-219.4700	-40.4706	-134.3115	-219.4700	0.0000	-2.5478
104	0	Stage 2: Stage 2:	-114.6616	-19.1985	-19.1985	-219.4715	-219.4715	-40.4721	-134.3130	-219.4715	0.0000	-2.4791
104	1	Stage 2: Stage 2:	-114.7021	14.2231	14.2231	-256.2505	-256.2505	-14.5075	-141.2419	-256.2505	0.0000	-2.7986
104	2	Stage 2: Stage 2:	-114.7545	52.1572	52.1572	-298.0088	-298.0088	14.9615	-149.1140	-298.0088	0.0000	-3.1793
105	0	Stage 2: Stage 2:	-1.6062	-1.8235	-1.8235	-1.3677	-1.3677	-1.7751	-1.5615	-1.8235	0.0000	-0.1387
105	1	Stage 2: Stage 2:	-1.6100	-1.6115	-1.6115	-1.6083	-1.6083	-1.6111	-1.6097	-1.6115	0.0000	-0.1788
105	2	Stage 2: Stage 2:	-1.6137	-1.3458	-1.3458	-1.9078	-1.9078	-1.4055	-1.6689	-1.9078	0.0000	-0.2189
106	0	Stage 2: Stage 2:	-97.9108	63.5853	63.5853	-275.2191	-275.2191	27.5964	-131.1555	-275.2191	0.0000	3.2216
106	1	Stage 2: Stage 2:	-97.9358	44.7286	44.7286	-254.5686	-254.5686	12.9363	-127.3039	-254.5686	0.0000	3.0409
106	2	Stage 2: Stage 2:	-97.9525	26.9610	26.9610	-235.0964	-235.0964	-0.8756	-123.6665	-235.0964	0.0000	2.8603
107	0	Stage 2: Stage 2:	-97.9490	26.9645	26.9645	-235.0929	-235.0929	-0.8721	-123.6630	-235.0929	0.0000	2.9759
107	1	Stage 2: Stage 2:	-98.0657	-55.7916	-55.7916	-144.4788	-144.4788	-65.2122	-106.7680	-144.4788	0.0000	1.9728
107	2	Stage 2: Stage 2:	-98.1917	-106.3505	-106.3505	-89.2339	-89.2339	-104.5323	-96.5121	-106.3505	0.0000	1.0955

RESULT : Member Stresses

Member	Station	Result Case	(P/A) @ Centroid (kips/ft²)	Normal Stress @ Point 1 (kips/ft²)	Normal Stress @ Point 2 (kips/ft²)	Normal Stress @ Point 3 (kips/ft²)	Normal Stress @ Point 4 (kips/ft²)	Normal Stress @ Point 5 (kips/ft²)	Normal Stress @ Point 6 (kips/ft²)	Max ABS Total Stress (kips/ft²)	Shear Stress Y (kips/ft²)	Shear Stress Z (kips/ft²)
108	0	Stage 2: Stage 2:	-98.1920	-106.3509	-106.3509	-89.2343	-89.2343	-104.5327	-96.5125	-106.3509	0.0000	1.0620
108	1	Stage 2: Stage 2:	-98.3103	-128.0978	-128.0978	-65.6063	-65.6063	-121.4598	-92.1784	-128.0978	0.0000	0.2818
108	2	Stage 2: Stage 2:	-98.4243	-124.6041	-124.6041	-69.6812	-69.6812	-118.7700	-93.0351	-124.6041	0.0000	-0.4984
109	0	Stage 2: Stage 2:	-98.4246	-124.6043	-124.6043	-69.6815	-69.6815	-118.7703	-93.0354	-124.6043	0.0000	-0.4374
109	1	Stage 2: Stage 2:	-98.4651	-118.0349	-118.0349	-76.9792	-76.9792	-113.6738	-94.4366	-118.0349	0.0000	-0.7376
109	2	Stage 2: Stage 2:	-98.5073	-107.7441	-107.7441	-88.3660	-88.3660	-105.6857	-96.6058	-107.7441	0.0000	-1.0778
110	0	Stage 2: Stage 2:	-1.6659	-1.8967	-1.8967	-1.4125	-1.4125	-1.8453	-1.6184	-1.8967	0.0000	-0.1348
110	1	Stage 2: Stage 2:	-1.6717	-1.6831	-1.6831	-1.6592	-1.6592	-1.6806	-1.6694	-1.6831	0.0000	-0.1759
110	2	Stage 2: Stage 2:	-1.6754	-1.4146	-1.4146	-1.9618	-1.9618	-1.4727	-1.7291	-1.9618	0.0000	-0.2169
111	0	Stage 2: Stage 2:	-133.8060	-86.6237	-86.6237	-185.6079	-185.6079	-97.1382	-143.5187	-185.6079	0.0000	2.0842
111	1	Stage 2: Stage 2:	-133.8310	-97.7484	-97.7484	-173.4465	-173.4465	-105.7893	-141.2587	-173.4465	0.0000	1.9175
111	2	Stage 2: Stage 2:	-133.8436	-107.9440	-107.9440	-162.2790	-162.2790	-113.7157	-139.1751	-162.2790	0.0000	1.7507
112	0	Stage 2: Stage 2:	-133.8416	-107.9420	-107.9420	-162.2770	-162.2770	-113.7136	-139.1731	-162.2770	0.0000	1.9007
112	1	Stage 2: Stage 2:	-133.9736	-155.6962	-155.6962	-110.1242	-110.1242	-150.8554	-129.5020	-155.6962	0.0000	0.8650
112	2	Stage 2: Stage 2:	-134.0905	-169.4089	-169.4089	-95.3140	-95.3140	-161.5383	-126.8200	-169.4089	0.0000	-0.0286
113	0	Stage 2: Stage 2:	-134.0905	-169.4088	-169.4088	-95.3140	-95.3140	-161.5383	-126.8200	-169.4088	0.0000	-0.0677
113	1	Stage 2: Stage 2:	-134.2078	-153.5894	-153.5894	-112.9285	-112.9285	-149.2703	-130.2180	-153.5894	0.0000	-0.8765
113	2	Stage 2: Stage 2:	-134.3307	-110.4924	-110.4924	-160.5029	-160.5029	-115.8047	-139.2379	-160.5029	0.0000	-1.7286
114	0	Stage 2: Stage 2:	-134.3317	-110.4934	-110.4934	-160.5040	-160.5040	-115.8057	-139.2389	-160.5040	0.0000	-1.6467
114	1	Stage 2: Stage 2:	-134.3721	-93.1862	-93.1862	-179.5904	-179.5904	-102.3644	-142.8503	-179.5904	0.0000	-1.9365
114	2	Stage 2: Stage 2:	-134.4022	-73.0757	-73.0757	-201.7332	-201.7332	-86.7421	-147.0265	-201.7332	0.0000	-2.2263
115	0	Stage 2: Stage 2:	-1.8349	-1.9777	-1.9777	-1.6782	-1.6782	-1.9459	-1.8055	-1.9777	0.0000	-0.0667
115	1	Stage 2: Stage 2:	-1.8386	-1.8518	-1.8518	-1.8241	-1.8241	-1.8489	-1.8359	-1.8518	0.0000	-0.1096
115	2	Stage 2: Stage 2:	-1.8423	-1.6646	-1.6646	-2.0374	-2.0374	-1.7042	-1.8789	-2.0374	0.0000	-0.1525
116	0	Stage 2: Stage 2:	-134.3833	-111.4313	-111.4313	-159.5825	-159.5825	-116.5460	-139.1080	-159.5825	0.0000	1.5827
116	1	Stage 2: Stage 2:	-134.4073	-118.8895	-118.8895	-151.4444	-151.4444	-122.3476	-137.6017	-151.4444	0.0000	1.4344
116	2	Stage 2: Stage 2:	-134.4190	-125.6132	-125.6132	-144.0871	-144.0871	-127.5755	-136.2317	-144.0871	0.0000	1.2861
117	0	Stage 2: Stage 2:	-134.4175	-125.6117	-125.6117	-144.0856	-144.0856	-127.5740	-136.2303	-144.0856	0.0000	1.4313
117	1	Stage 2: Stage 2:	-134.5485	-157.6826	-157.6826	-109.1492	-109.1492	-152.5273	-129.7862	-157.6826	0.0000	0.3580
117	2	Stage 2: Stage 2:	-134.6751	-154.9927	-154.9927	-112.3682	-112.3682	-150.4650	-130.4927	-154.9927	0.0000	-0.5083
118	0	Stage 2: Stage 2:	-134.6750	-154.9926	-154.9926	-112.3681	-112.3681	-150.4649	-130.4925	-154.9926	0.0000	-0.5399
118	1	Stage 2: Stage 2:	-134.7994	-121.2216	-121.2216	-149.7067	-149.7067	-124.2473	-137.5945	-149.7067	0.0000	-1.3861
118	2	Stage 2: Stage 2:	-134.9237	-57.7474	-57.7474	-219.6565	-219.6565	-74.9459	-150.8108	-219.6565	0.0000	-2.2323
119	0	Stage 2: Stage 2:	-134.9250	-57.7487	-57.7487	-219.6578	-219.6578	-74.9472	-150.8121	-219.6578	0.0000	-2.1519

RESULT : Member Stresses

Member	Station	Result Case	(P/A) @ Centroid (kips/ft²)	Normal Stress @ Point 1 (kips/ft²)	Normal Stress @ Point 2 (kips/ft²)	Normal Stress @ Point 3 (kips/ft²)	Normal Stress @ Point 4 (kips/ft²)	Normal Stress @ Point 5 (kips/ft²)	Normal Stress @ Point 6 (kips/ft²)	Max ABS Total Stress (kips/ft²)	Shear Stress Y (kips/ft²)	Shear Stress Z (kips/ft²)
119	1	Stage 2: Stage 2:	-134.9495	-40.9520	-40.9520	-238.1503	-238.1503	-61.8991	-154.2993	-238.1503	0.0000	-2.3732
119	2	Stage 2: Stage 2:	-134.9780	-22.5129	-22.5129	-258.4547	-258.4547	-47.5754	-158.1295	-258.4547	0.0000	-2.5946
120	0	Stage 2: Stage 2:	-1.3028	-1.2410	-1.2410	-1.3706	-1.3706	-1.2548	-1.3155	-1.3706	0.0000	0.0735
120	1	Stage 2: Stage 2:	-1.3085	-1.3213	-1.3213	-1.2944	-1.2944	-1.3184	-1.3058	-1.3213	0.0000	0.0271
120	2	Stage 2: Stage 2:	-1.3141	-1.3263	-1.3263	-1.3008	-1.3008	-1.3236	-1.3116	-1.3263	0.0000	-0.0192
121	0	Stage 2: Stage 2:	-88.9541	-25.9442	-25.9442	-158.1334	-158.1334	-39.9858	-101.9250	-158.1334	0.0000	2.1087
121	1	Stage 2: Stage 2:	-88.9792	-36.5895	-36.5895	-146.4983	-146.4983	-48.2644	-99.7638	-146.4983	0.0000	1.9524
121	2	Stage 2: Stage 2:	-88.9919	-46.4140	-46.4140	-135.7387	-135.7387	-55.9024	-97.7568	-135.7387	0.0000	1.7962
122	0	Stage 2: Stage 2:	-88.9928	-46.4149	-46.4149	-135.7396	-135.7396	-55.9033	-97.7577	-135.7396	0.0000	1.7507
122	1	Stage 2: Stage 2:	-89.1229	-90.8547	-90.8547	-87.2215	-87.2215	-90.4688	-88.7664	-90.8547	0.0000	0.6886
122	2	Stage 2: Stage 2:	-89.1781	-99.8601	-99.8601	-77.4502	-77.4502	-97.4797	-86.9792	-99.8601	0.0000	-0.2013
123	0	Stage 2: Stage 2:	-89.1781	-99.8601	-99.8601	-77.4502	-77.4502	-97.4797	-86.9792	-99.8601	0.0000	-0.2013
123	1	Stage 2: Stage 2:	-89.0287	-75.9872	-75.9872	-103.3472	-103.3472	-78.8935	-91.7134	-103.3472	0.0000	-1.0911
123	2	Stage 2: Stage 2:	-88.8791	-19.0594	-19.0594	-165.5349	-165.5349	-34.6185	-103.2517	-165.5349	0.0000	-2.0314
124	0	Stage 2: Stage 2:	-88.8801	-19.0604	-19.0604	-165.5359	-165.5359	-34.6195	-103.2528	-165.5359	0.0000	-1.9863
124	1	Stage 2: Stage 2:	-88.8686	-9.6301	-9.6301	-175.8655	-175.8655	-27.2881	-105.1802	-175.8655	0.0000	-2.1231
124	2	Stage 2: Stage 2:	-88.8429	0.4316	0.4316	-186.8585	-186.8585	-19.4629	-107.2205	-186.8585	0.0000	-2.2599
125	0	Stage 2: Stage 2:	-1.1609	-1.1339	-1.1339	-1.1907	-1.1907	-1.1399	-1.1665	-1.1907	0.0000	0.0452
125	1	Stage 2: Stage 2:	-1.1543	-1.1678	-1.1678	-1.1396	-1.1396	-1.1648	-1.1516	-1.1678	0.0000	-0.0049
125	2	Stage 2: Stage 2:	-1.1478	-1.1145	-1.1145	-1.1843	-1.1843	-1.1219	-1.1546	-1.1843	0.0000	-0.0550
126	0	Stage 2: Stage 2:	-117.0410	-5.0048	-5.0048	-240.0468	-240.0468	-29.9717	-140.1041	-240.0468	0.0000	2.7144
126	1	Stage 2: Stage 2:	-117.0121	-27.5600	-27.5600	-215.2226	-215.2226	-47.4941	-135.4262	-215.2226	0.0000	2.4541
126	2	Stage 2: Stage 2:	-116.9690	-47.8419	-47.8419	-192.8645	-192.8645	-63.2466	-131.1992	-192.8645	0.0000	2.1938
127	0	Stage 2: Stage 2:	-116.9703	-47.8431	-47.8431	-192.8658	-192.8658	-63.2479	-131.2004	-192.8658	0.0000	2.1265
127	1	Stage 2: Stage 2:	-116.8375	-101.9903	-101.9903	-133.1385	-133.1385	-105.2989	-119.8939	-133.1385	0.0000	1.2338
127	2	Stage 2: Stage 2:	-116.7060	-129.4099	-129.4099	-102.7581	-102.7581	-126.5789	-114.0908	-129.4099	0.0000	0.4454
128	0	Stage 2: Stage 2:	-116.7059	-129.4099	-129.4099	-102.7581	-102.7581	-126.5788	-114.0907	-129.4099	0.0000	0.4584
128	1	Stage 2: Stage 2:	-116.5745	-131.3594	-131.3594	-100.3420	-100.3420	-128.0646	-113.5309	-131.3594	0.0000	-0.3388
128	2	Stage 2: Stage 2:	-115.3363	-112.8623	-112.8623	-118.0525	-118.0525	-113.4137	-115.8456	-118.0525	0.0000	3.3714
129	0	Stage 2: Stage 2:	-115.3358	-112.8618	-112.8618	-118.0520	-118.0520	-113.4131	-115.8451	-118.0520	0.0000	3.3897
129	1	Stage 2: Stage 2:	-114.1084	-123.2627	-123.2627	-104.0578	-104.0578	-121.2227	-112.2239	-123.2627	0.0000	7.2651
129	2	Stage 2: Stage 2:	-113.0991	-140.6392	-140.6392	-82.8624	-82.8624	-134.5020	-107.4298	-140.6392	0.0000	9.9721
130	0	Stage 2: Stage 2:	-113.1946	-140.7347	-140.7347	-82.9579	-82.9579	-134.5975	-107.5253	-140.7347	0.0000	8.8221
130	1	Stage 2: Stage 2:	-112.7470	-170.0174	-170.0174	-49.8690	-49.8690	-157.2549	-100.9576	-170.0174	0.0000	9.8814

RESULT : Member Stresses

Member	Station	Result Case	(P/A) @ Centroid (kips/ft²)	Normal Stress @ Point 1 (kips/ft²)	Normal Stress @ Point 2 (kips/ft²)	Normal Stress @ Point 3 (kips/ft²)	Normal Stress @ Point 4 (kips/ft²)	Normal Stress @ Point 5 (kips/ft²)	Normal Stress @ Point 6 (kips/ft²)	Max ABS Total Stress (kips/ft²)	Shear Stress Y (kips/ft²)	Shear Stress Z (kips/ft²)
130	2	Stage 2: Stage 2:	-112.7062	-200.5448	-200.5448	-16.2672	-16.2672	-180.9702	-94.6242	-200.5448	0.0000	9.8024
131	0	Stage 2: Stage 2:	-113.5998	-124.2508	-124.2508	-101.9060	-101.9060	-121.8772	-111.4072	-124.2508	0.0000	12.4669
131	1	Stage 2: Stage 2:	-113.5867	-162.9173	-162.9173	-59.4261	-59.4261	-151.9242	-103.4318	-162.9173	0.0000	12.3905
131	2	Stage 2: Stage 2:	0.0000	0.0000	0.0000	0.0000	0.0000	0.0000	0.0000	0.0000	0.0000	0.0000
162	0	Stage 2: Stage 2:	0.0000	0.0000	0.0000	0.0000	0.0000	0.0000	0.0000	0.0000	0.0000	0.0000
162	1	Stage 2: Stage 2:	-106.7079	-269.2094	-269.2094	71.7044	71.7044	-232.9964	-73.2562	-269.2094	0.0000	-12.2588
162	2	Stage 2: Stage 2:	-106.7212	-211.7914	-211.7914	8.6366	8.6366	-188.3768	-85.0920	-211.7914	0.0000	-12.3729
400	0	Stage 2: Stage 2:	-0.0145	0.0000	0.0000	0.0000	0.0000	0.0000	0.0000	0.0000	0.0000	-0.0054
400	1	Stage 2: Stage 2:	-0.0145	0.0000	0.0000	0.0000	0.0000	0.0000	0.0000	0.0000	0.0000	-0.0054
400	2	Stage 2: Stage 2:	-0.0145	0.0000	0.0000	0.0000	0.0000	0.0000	0.0000	0.0000	0.0000	-0.0054
701	0	Stage 2: Stage 2:	-11.9526	90.1648	-114.0699	-114.0699	90.1648	0.0000	0.0000	-114.0699	0.0000	5.0052
701	1	Stage 2: Stage 2:	-11.8401	84.0208	-107.7009	-107.7009	84.0208	0.0000	0.0000	-107.7009	0.0000	5.0052
701	2	Stage 2: Stage 2:	-11.7276	77.8768	-101.3320	-101.3320	77.8768	0.0000	0.0000	-101.3320	0.0000	5.0052
702	0	Stage 2: Stage 2:	-11.7276	77.8768	-101.3320	-101.3320	77.8768	0.0000	0.0000	-101.3320	0.0000	5.0052
702	1	Stage 2: Stage 2:	-10.7448	24.2024	-45.6919	-45.6919	24.2024	0.0000	0.0000	-45.6919	0.0000	5.0052
702	2	Stage 2: Stage 2:	-9.7619	-29.4721	9.9482	9.9482	-29.4721	0.0000	0.0000	-29.4721	0.0000	5.0052
703	0	Stage 2: Stage 2:	-9.7619	-29.4721	9.9482	9.9482	-29.4721	0.0000	0.0000	-29.4721	0.0000	5.0052
703	1	Stage 2: Stage 2:	-9.6830	-33.7813	14.4153	14.4153	-33.7813	0.0000	0.0000	-33.7813	0.0000	5.0052
703	2	Stage 2: Stage 2:	-9.6041	-38.0906	18.8823	18.8823	-38.0906	0.0000	0.0000	-38.0906	0.0000	5.0052
704	0	Stage 2: Stage 2:	74.0274	97.7803	50.2746	50.2746	97.7803	0.0000	0.0000	97.7803	0.0000	2.3372
704	1	Stage 2: Stage 2:	74.1977	88.2705	60.1249	60.1249	88.2705	0.0000	0.0000	88.2705	0.0000	1.8863
704	2	Stage 2: Stage 2:	74.3680	80.8278	67.9081	67.9081	80.8278	0.0000	0.0000	80.8278	0.0000	1.4353
705	0	Stage 2: Stage 2:	74.3660	80.8259	67.9061	67.9061	80.8259	0.0000	0.0000	80.8259	0.0000	1.5750
705	1	Stage 2: Stage 2:	75.2699	72.4410	78.0988	78.0988	72.4410	0.0000	0.0000	78.0988	0.0000	-0.8090
705	2	Stage 2: Stage 2:	76.1738	121.8744	30.4732	30.4732	121.8744	0.0000	0.0000	121.8744	0.0000	-3.1931
706	0	Stage 2: Stage 2:	76.1675	121.8681	30.4669	30.4669	121.8681	0.0000	0.0000	121.8681	0.0000	-3.4034
706	1	Stage 2: Stage 2:	76.2894	133.7069	18.8718	18.8718	133.7069	0.0000	0.0000	133.7069	0.0000	-3.7268
706	2	Stage 2: Stage 2:	76.4112	146.6087	6.2138	6.2138	146.6087	0.0000	0.0000	146.6087	0.0000	-4.0502
707	0	Stage 2: Stage 2:	-87.6148	-9.2213	-166.0084	-166.0084	-9.2213	0.0000	0.0000	-166.0084	0.0000	4.9289
707	1	Stage 2: Stage 2:	-87.4289	-24.9543	-149.9035	-149.9035	-24.9543	0.0000	0.0000	-149.9035	0.0000	4.8576
707	2	Stage 2: Stage 2:	-87.2430	-40.4551	-134.0309	-134.0309	-40.4551	0.0000	0.0000	-134.0309	0.0000	4.7862
708	0	Stage 2: Stage 2:	-87.2606	-40.4728	-134.0485	-134.0485	-40.4728	0.0000	0.0000	-134.0485	0.0000	4.2983
708	1	Stage 2: Stage 2:	-86.4763	-96.5665	-76.3860	-76.3860	-96.5665	0.0000	0.0000	-96.5665	0.0000	4.0020
708	2	Stage 2: Stage 2:	-85.6919	-148.6000	-22.7837	-22.7837	-148.6000	0.0000	0.0000	-148.6000	0.0000	3.7058

RESULT : Member Stresses

Member	Station	Result Case	(P/A) @ Centroid (kips/ft²)	Normal Stress @ Point 1 (kips/ft²)	Normal Stress @ Point 2 (kips/ft²)	Normal Stress @ Point 3 (kips/ft²)	Normal Stress @ Point 4 (kips/ft²)	Normal Stress @ Point 5 (kips/ft²)	Normal Stress @ Point 6 (kips/ft²)	Max ABS Total Stress (kips/ft²)	Shear Stress Y (kips/ft²)	Shear Stress Z (kips/ft²)
709	0	Stage 2: Stage 2:	-85.6903	-148.5984	-22.7821	-22.7821	-148.5984	0.0000	0.0000	-148.5984	0.0000	3.7588
709	1	Stage 2: Stage 2:	-85.4871	-161.6014	-9.3729	-9.3729	-161.6014	0.0000	0.0000	-161.6014	0.0000	3.6819
709	2	Stage 2: Stage 2:	-85.2840	-174.3316	3.7636	3.7636	-174.3316	0.0000	0.0000	-174.3316	0.0000	3.6050
710	0	Stage 2: Stage 2:	-187.2735	-110.9003	-263.6466	-263.6466	-110.9003	0.0000	0.0000	-263.6466	0.0000	3.6246
710	1	Stage 2: Stage 2:	-187.1045	-132.1426	-242.0664	-242.0664	-132.1426	0.0000	0.0000	-242.0664	0.0000	3.2226
710	2	Stage 2: Stage 2:	-186.9354	-150.8704	-223.0005	-223.0005	-150.8704	0.0000	0.0000	-223.0005	0.0000	2.8205
711	0	Stage 2: Stage 2:	-186.9373	-150.8723	-223.0023	-223.0023	-150.8723	0.0000	0.0000	-223.0023	0.0000	2.6357
711	1	Stage 2: Stage 2:	-186.0334	-202.1568	-169.9100	-169.9100	-202.1568	0.0000	0.0000	-202.1568	0.0000	0.4898
711	2	Stage 2: Stage 2:	-185.1295	-181.7761	-188.4830	-188.4830	-181.7761	0.0000	0.0000	-188.4830	0.0000	-1.6562
712	0	Stage 2: Stage 2:	-185.1261	-181.7726	-188.4795	-188.4795	-181.7726	0.0000	0.0000	-188.4795	0.0000	-2.1397
712	1	Stage 2: Stage 2:	-185.0050	-171.4826	-198.5273	-198.5273	-171.4826	0.0000	0.0000	-198.5273	0.0000	-2.4257
712	2	Stage 2: Stage 2:	-184.8839	-159.9188	-209.8489	-209.8489	-159.9188	0.0000	0.0000	-209.8489	0.0000	-2.7116
713	0	Stage 2: Stage 2:	61.6558	24.8711	98.4404	98.4404	24.8711	0.0000	0.0000	98.4404	0.0000	-1.5616
713	1	Stage 2: Stage 2:	61.7893	28.4866	95.0921	95.0921	28.4866	0.0000	0.0000	95.0921	0.0000	-1.5652
713	2	Stage 2: Stage 2:	61.9229	32.1099	91.7360	91.7360	32.1099	0.0000	0.0000	91.7360	0.0000	-1.5687
714	0	Stage 2: Stage 2:	61.9298	32.1167	91.7429	91.7429	32.1167	0.0000	0.0000	91.7429	0.0000	-1.1134
714	1	Stage 2: Stage 2:	62.8165	49.5845	76.0486	76.0486	49.5845	0.0000	0.0000	76.0486	0.0000	-1.1303
714	2	Stage 2: Stage 2:	63.7032	67.3016	60.1048	60.1048	67.3016	0.0000	0.0000	67.3016	0.0000	-1.1471
715	0	Stage 2: Stage 2:	63.7035	67.3019	60.1051	60.1051	67.3019	0.0000	0.0000	67.3019	0.0000	-1.1271
715	1	Stage 2: Stage 2:	63.8537	70.2788	57.4287	57.4287	70.2788	0.0000	0.0000	70.2788	0.0000	-1.1300
715	2	Stage 2: Stage 2:	64.0040	73.2628	54.7452	54.7452	73.2628	0.0000	0.0000	73.2628	0.0000	-1.1328
716	0	Stage 2: Stage 2:	-14.6834	-31.3065	1.9396	1.9396	-31.3065	0.0000	0.0000	-31.3065	0.0000	1.5022
716	1	Stage 2: Stage 2:	-14.5173	-38.4179	9.3834	9.3834	-38.4179	0.0000	0.0000	-38.4179	0.0000	1.1633
716	2	Stage 2: Stage 2:	-14.3511	-43.6790	14.9768	14.9768	-43.6790	0.0000	0.0000	-43.6790	0.0000	0.8245
717	0	Stage 2: Stage 2:	-14.3522	-43.6801	14.9757	14.9757	-43.6801	0.0000	0.0000	-43.6801	0.0000	0.7968
717	1	Stage 2: Stage 2:	-13.4459	-39.0950	12.2032	12.2032	-39.0950	0.0000	0.0000	-39.0950	0.0000	-1.0445
717	2	Stage 2: Stage 2:	-12.5397	20.1758	-45.2552	-45.2552	20.1758	0.0000	0.0000	-45.2552	0.0000	-2.8857
718	0	Stage 2: Stage 2:	-12.5480	20.1675	-45.2635	-45.2635	20.1675	0.0000	0.0000	-45.2635	0.0000	-2.8333
718	1	Stage 2: Stage 2:	-12.4308	31.6943	-56.5559	-56.5559	31.6943	0.0000	0.0000	-56.5559	0.0000	-3.0733
718	2	Stage 2: Stage 2:	-12.3136	44.1483	-68.7755	-68.7755	44.1483	0.0000	0.0000	-68.7755	0.0000	-3.3133
719	0	Stage 2: Stage 2:	-21.0878	-164.4364	122.2608	122.2608	-164.4364	0.0000	0.0000	-164.4364	0.0000	-6.2009
719	1	Stage 2: Stage 2:	-20.9642	-150.5824	108.6540	108.6540	-150.5824	0.0000	0.0000	-150.5824	0.0000	-6.2574
719	2	Stage 2: Stage 2:	-20.8406	-136.6039	94.9227	94.9227	-136.6039	0.0000	0.0000	-136.6039	0.0000	-6.3139
720	0	Stage 2: Stage 2:	-20.8415	-136.6048	94.9217	94.9217	-136.6048	0.0000	0.0000	-136.6048	0.0000	-6.3095

RESULT : Member Stresses

Member	Station	Result Case	(P/A) @ Centroid (kips/ft²)	Normal Stress @ Point 1 (kips/ft²)	Normal Stress @ Point 2 (kips/ft²)	Normal Stress @ Point 3 (kips/ft²)	Normal Stress @ Point 4 (kips/ft²)	Normal Stress @ Point 5 (kips/ft²)	Normal Stress @ Point 6 (kips/ft²)	Max ABS Total Stress (kips/ft²)	Shear Stress Y (kips/ft²)	Shear Stress Z (kips/ft²)
720	1	Stage 2: Stage 2:	-19.9072	-26.9513	-12.8631	-12.8631	-26.9513	0.0000	0.0000	-26.9513	0.0000	-6.7370
720	2	Stage 2: Stage 2:	-18.9728	89.8272	-127.7728	-127.7728	89.8272	0.0000	0.0000	-127.7728	0.0000	-7.1645
721	0	Stage 2: Stage 2:	-19.0017	89.7983	-127.8016	-127.8016	89.7983	0.0000	0.0000	-127.8016	0.0000	-7.0535
721	1	Stage 2: Stage 2:	-18.8946	103.4440	-141.2333	-141.2333	103.4440	0.0000	0.0000	-141.2333	0.0000	-7.1032
721	2	Stage 2: Stage 2:	-18.7876	117.1847	-154.7599	-154.7599	117.1847	0.0000	0.0000	-154.7599	0.0000	-7.1529
722	0	Stage 2: Stage 2:	140.4076	147.3313	133.4838	133.4838	147.3313	0.0000	0.0000	147.3313	0.0000	1.6646
722	1	Stage 2: Stage 2:	140.5705	140.6427	140.4983	140.4983	140.6427	0.0000	0.0000	140.6427	0.0000	1.4102
722	2	Stage 2: Stage 2:	140.7334	135.0880	146.3788	146.3788	135.0880	0.0000	0.0000	146.3788	0.0000	1.1557
723	0	Stage 2: Stage 2:	140.7364	135.0910	146.3818	146.3818	135.0910	0.0000	0.0000	146.3818	0.0000	0.3576
723	1	Stage 2: Stage 2:	141.6489	145.0926	138.2052	138.2052	145.0926	0.0000	0.0000	145.0926	0.0000	-1.0814
723	2	Stage 2: Stage 2:	142.5614	191.2366	93.8862	93.8862	191.2366	0.0000	0.0000	191.2366	0.0000	-2.5205
724	0	Stage 2: Stage 2:	142.5259	191.2011	93.8507	93.8507	191.2011	0.0000	0.0000	191.2011	0.0000	-4.5764
724	1	Stage 2: Stage 2:	142.6360	205.6844	79.5876	79.5876	205.6844	0.0000	0.0000	205.6844	0.0000	-4.7545
724	2	Stage 2: Stage 2:	142.7462	220.7165	64.7758	64.7758	220.7165	0.0000	0.0000	220.7165	0.0000	-4.9326
725	0	Stage 2: Stage 2:	-153.2430	-152.6112	-153.8748	-153.8748	-152.6112	0.0000	0.0000	-153.8748	0.0000	1.2695
725	1	Stage 2: Stage 2:	-153.0956	-156.4737	-149.7175	-149.7175	-156.4737	0.0000	0.0000	-156.4737	0.0000	1.1023
725	2	Stage 2: Stage 2:	-152.9482	-159.7706	-146.1259	-146.1259	-159.7706	0.0000	0.0000	-159.7706	0.0000	0.9350
726	0	Stage 2: Stage 2:	-152.9502	-159.7726	-146.1279	-146.1279	-159.7726	0.0000	0.0000	-159.7726	0.0000	0.0332
726	1	Stage 2: Stage 2:	-152.0393	-148.9049	-155.1737	-155.1737	-148.9049	0.0000	0.0000	-155.1737	0.0000	-0.9905
726	2	Stage 2: Stage 2:	-151.1283	-116.7423	-185.5144	-185.5144	-116.7423	0.0000	0.0000	-185.5144	0.0000	-2.0143
727	0	Stage 2: Stage 2:	-151.1296	-116.7436	-185.5156	-185.5156	-116.7436	0.0000	0.0000	-185.5156	0.0000	-1.8744
727	1	Stage 2: Stage 2:	-151.0288	-112.1956	-189.8620	-189.8620	-112.1956	0.0000	0.0000	-189.8620	0.0000	-1.9878
727	2	Stage 2: Stage 2:	-150.9280	-107.3863	-194.4697	-194.4697	-107.3863	0.0000	0.0000	-194.4697	0.0000	-2.1012
728	0	Stage 2: Stage 2:	-97.0359	-110.2098	-83.8621	-83.8621	-110.2098	0.0000	0.0000	-110.2098	0.0000	0.1039
728	1	Stage 2: Stage 2:	-96.8898	-110.1706	-83.6091	-83.6091	-110.1706	0.0000	0.0000	-110.1706	0.0000	-0.0351
728	2	Stage 2: Stage 2:	-96.7437	-109.6995	-83.7879	-83.7879	-109.6995	0.0000	0.0000	-109.6995	0.0000	-0.1741
729	0	Stage 2: Stage 2:	-96.7426	-109.6984	-83.7867	-83.7867	-109.6984	0.0000	0.0000	-109.6984	0.0000	-0.5918
729	1	Stage 2: Stage 2:	-95.8082	-88.2963	-103.3201	-103.3201	-88.2963	0.0000	0.0000	-103.3201	0.0000	-1.4740
729	2	Stage 2: Stage 2:	-94.8738	-49.4134	-140.3342	-140.3342	-49.4134	0.0000	0.0000	-140.3342	0.0000	-2.3562
730	0	Stage 2: Stage 2:	-94.8813	-49.4209	-140.3416	-140.3416	-49.4209	0.0000	0.0000	-140.3416	0.0000	-1.8753
730	1	Stage 2: Stage 2:	-94.7828	-45.2964	-144.2693	-144.2693	-45.2964	0.0000	0.0000	-144.2693	0.0000	-1.9691
730	2	Stage 2: Stage 2:	-94.6844	-40.9755	-148.3933	-148.3933	-40.9755	0.0000	0.0000	-148.3933	0.0000	-2.0628
731	0	Stage 2: Stage 2:	84.3386	31.0257	137.6516	137.6516	31.0257	0.0000	0.0000	137.6516	0.0000	-0.0451
731	1	Stage 2: Stage 2:	84.4971	32.2239	136.7702	136.7702	32.2239	0.0000	0.0000	136.7702	0.0000	-0.3610

RESULT : Member Stresses

Member	Station	Result Case	(P/A) @ Centroid (kips/ft²)	Normal Stress @ Point 1 (kips/ft²)	Normal Stress @ Point 2 (kips/ft²)	Normal Stress @ Point 3 (kips/ft²)	Normal Stress @ Point 4 (kips/ft²)	Normal Stress @ Point 5 (kips/ft²)	Normal Stress @ Point 6 (kips/ft²)	Max ABS Total Stress (kips/ft²)	Shear Stress Y (kips/ft²)	Shear Stress Z (kips/ft²)
731	2	Stage 2: Stage 2:	84.6555	35.0396	134.2715	134.2715	35.0396	0.0000	0.0000	134.2715	0.0000	-0.6769
732	0	Stage 2: Stage 2:	84.6569	35.0409	134.2728	134.2728	35.0409	0.0000	0.0000	134.2728	0.0000	-0.3674
732	1	Stage 2: Stage 2:	85.5358	70.8893	100.1822	100.1822	70.8893	0.0000	0.0000	100.1822	0.0000	-2.1074
732	2	Stage 2: Stage 2:	86.4147	155.9095	16.9199	16.9199	155.9095	0.0000	0.0000	155.9095	0.0000	-3.8474
733	0	Stage 2: Stage 2:	86.4217	155.9165	16.9269	16.9269	155.9165	0.0000	0.0000	155.9165	0.0000	-3.6126
733	1	Stage 2: Stage 2:	86.5350	169.5439	3.5261	3.5261	169.5439	0.0000	0.0000	169.5439	0.0000	-3.8357
733	2	Stage 2: Stage 2:	86.6483	183.9809	-10.6843	-10.6843	183.9809	0.0000	0.0000	183.9809	0.0000	-4.0588
734	0	Stage 2: Stage 2:	-8.6255	-25.7259	8.4748	8.4748	-25.7259	0.0000	0.0000	-25.7259	0.0000	-3.8558
734	1	Stage 2: Stage 2:	-8.5318	-21.4411	4.3775	4.3775	-21.4411	0.0000	0.0000	-21.4411	0.0000	-3.8558
734	2	Stage 2: Stage 2:	-8.4380	-17.1562	0.2801	0.2801	-17.1562	0.0000	0.0000	-17.1562	0.0000	-3.8558
735	0	Stage 2: Stage 2:	-8.4380	-17.1562	0.2801	0.2801	-17.1562	0.0000	0.0000	-17.1562	0.0000	-3.8558
735	1	Stage 2: Stage 2:	-7.4615	27.4780	-42.4010	-42.4010	27.4780	0.0000	0.0000	-42.4010	0.0000	-3.8558
735	2	Stage 2: Stage 2:	-6.4849	72.1122	-85.0821	-85.0821	72.1122	0.0000	0.0000	-85.0821	0.0000	-3.8558
736	0	Stage 2: Stage 2:	-6.4849	72.1122	-85.0821	-85.0821	72.1122	0.0000	0.0000	-85.0821	0.0000	-3.8558
736	1	Stage 2: Stage 2:	-6.4162	75.2530	-88.0855	-88.0855	75.2530	0.0000	0.0000	-88.0855	0.0000	-3.8558
736	2	Stage 2: Stage 2:	-6.3475	78.3938	-91.0888	-91.0888	78.3938	0.0000	0.0000	-91.0888	0.0000	-3.8558
800	0	Stage 2: Stage 2:	-0.4898	0.0000	0.0000	0.0000	0.0000	0.0000	0.0000	0.0000	0.0000	-0.1992
800	1	Stage 2: Stage 2:	-0.4898	0.0000	0.0000	0.0000	0.0000	0.0000	0.0000	0.0000	0.0000	-0.1992
800	2	Stage 2: Stage 2:	-0.4898	0.0000	0.0000	0.0000	0.0000	0.0000	0.0000	0.0000	0.0000	-0.1992
801	0	Stage 2: Stage 2:	-0.6595	0.0000	0.0000	0.0000	0.0000	0.0000	0.0000	0.0000	0.0000	-0.3014
801	1	Stage 2: Stage 2:	-0.6595	0.0000	0.0000	0.0000	0.0000	0.0000	0.0000	0.0000	0.0000	-0.3014
801	2	Stage 2: Stage 2:	-0.6595	0.0000	0.0000	0.0000	0.0000	0.0000	0.0000	0.0000	0.0000	-0.3014
802	0	Stage 2: Stage 2:	-0.6323	0.0000	0.0000	0.0000	0.0000	0.0000	0.0000	0.0000	0.0000	-0.3594
802	1	Stage 2: Stage 2:	-0.6323	0.0000	0.0000	0.0000	0.0000	0.0000	0.0000	0.0000	0.0000	-0.3594
802	2	Stage 2: Stage 2:	-0.6323	0.0000	0.0000	0.0000	0.0000	0.0000	0.0000	0.0000	0.0000	-0.3594
803	0	Stage 2: Stage 2:	-0.3955	0.0000	0.0000	0.0000	0.0000	0.0000	0.0000	0.0000	0.0000	-0.2738
803	1	Stage 2: Stage 2:	-0.3955	0.0000	0.0000	0.0000	0.0000	0.0000	0.0000	0.0000	0.0000	-0.2738
803	2	Stage 2: Stage 2:	-0.3955	0.0000	0.0000	0.0000	0.0000	0.0000	0.0000	0.0000	0.0000	-0.2738
804	0	Stage 2: Stage 2:	-0.4117	0.0000	0.0000	0.0000	0.0000	0.0000	0.0000	0.0000	0.0000	-0.4849
804	1	Stage 2: Stage 2:	-0.4117	0.0000	0.0000	0.0000	0.0000	0.0000	0.0000	0.0000	0.0000	-0.4849
804	2	Stage 2: Stage 2:	-0.4117	0.0000	0.0000	0.0000	0.0000	0.0000	0.0000	0.0000	0.0000	-0.4849
810	0	Stage 2: Stage 2:	0.1758	0.0000	0.0000	0.0000	0.0000	0.0000	0.0000	0.0000	0.0000	0.5956
810	1	Stage 2: Stage 2:	0.1758	0.0000	0.0000	0.0000	0.0000	0.0000	0.0000	0.0000	0.0000	0.5956
810	2	Stage 2: Stage 2:	0.1758	0.0000	0.0000	0.0000	0.0000	0.0000	0.0000	0.0000	0.0000	0.5956

RESULT : Member Stresses

Member	Station	Result Case	(P/A) @ Centroid (kips/ft²)	Normal Stress @ Point 1 (kips/ft²)	Normal Stress @ Point 2 (kips/ft²)	Normal Stress @ Point 3 (kips/ft²)	Normal Stress @ Point 4 (kips/ft²)	Normal Stress @ Point 5 (kips/ft²)	Normal Stress @ Point 6 (kips/ft²)	Max ABS Total Stress (kips/ft²)	Shear Stress Y (kips/ft²)	Shear Stress Z (kips/ft²)
811	0	Stage 2: Stage 2:	0.0293	0.0000	0.0000	0.0000	0.0000	0.0000	0.0000	0.0000	0.0000	0.5306
811	1	Stage 2: Stage 2:	0.0293	0.0000	0.0000	0.0000	0.0000	0.0000	0.0000	0.0000	0.0000	0.5306
811	2	Stage 2: Stage 2:	0.0293	0.0000	0.0000	0.0000	0.0000	0.0000	0.0000	0.0000	0.0000	0.5306
812	0	Stage 2: Stage 2:	-0.2168	0.0000	0.0000	0.0000	0.0000	0.0000	0.0000	0.0000	0.0000	-0.6944
812	1	Stage 2: Stage 2:	-0.2168	0.0000	0.0000	0.0000	0.0000	0.0000	0.0000	0.0000	0.0000	-0.6944
812	2	Stage 2: Stage 2:	-0.2168	0.0000	0.0000	0.0000	0.0000	0.0000	0.0000	0.0000	0.0000	-0.6944
813	0	Stage 2: Stage 2:	-0.4921	0.0000	0.0000	0.0000	0.0000	0.0000	0.0000	0.0000	0.0000	-0.5441
813	1	Stage 2: Stage 2:	-0.4921	0.0000	0.0000	0.0000	0.0000	0.0000	0.0000	0.0000	0.0000	-0.5441
813	2	Stage 2: Stage 2:	-0.4921	0.0000	0.0000	0.0000	0.0000	0.0000	0.0000	0.0000	0.0000	-0.5441
814	0	Stage 2: Stage 2:	-0.4120	0.0000	0.0000	0.0000	0.0000	0.0000	0.0000	0.0000	0.0000	-0.2487
814	1	Stage 2: Stage 2:	-0.4120	0.0000	0.0000	0.0000	0.0000	0.0000	0.0000	0.0000	0.0000	-0.2487
814	2	Stage 2: Stage 2:	-0.4120	0.0000	0.0000	0.0000	0.0000	0.0000	0.0000	0.0000	0.0000	-0.2487

IV. CONSTRUCTION CHECK

- DECK & CANOPY STRESSES

MEMBER STRESSES

DECK & CANOPY MEMBERS
ERECTION OF PRECAST MAIN SPAN: SUPPORTS AT FIRST NODAL ZONES FROM BOTH ENDS

(-) compression
Point 1: Top right
Point 2: Top left
Point 3: Bottom left
Point 4: Bottom right
Point 5: Top center
Point 6: Bottom center

			ERECT MAIN SPAN SELFWEIGHT						
	Member	Station	(P/A) @ Centroid (kips/ft²)	Normal Stress @ Point 1 (kips/ft²)	Normal Stress @ Point 2 (kips/ft²)	Normal Stress @ Point 3 (kips/ft²)	Normal Stress @ Point 4 (kips/ft²)	Normal Stress @ Point 5 (kips/ft²)	Normal Stress @ Point 6 (kips/ft²)
DECK MEMBERS	1	0	0.0	0.6	0.6	0.1	0.1	0.4	-0.9
	1	1	0.0	1.2	1.2	0.2	0.2	0.9	-1.8
	1	2	0.0	1.9	1.9	0.3	0.3	1.3	-2.8
	2	0	0.0	1.9	1.9	0.3	0.3	1.3	-2.8
	2	1	0.0	5.0	5.0	0.8	0.8	3.5	-7.5
	2	2	0.0	8.2	8.2	1.2	1.2	5.7	-12.3
	3	0	-8.5	-7.3	-7.3	-8.3	-8.3	-7.6	-10.2
	3	1	-8.5	-16.9	-16.9	-9.7	-9.7	-14.4	4.3
	3	2	-8.4	-22.8	-22.8	-10.6	-10.6	-18.5	13.2
	4	0	-8.4	-22.8	-22.8	-10.6	-10.6	-18.5	13.2
	4	1	-8.4	-22.8	-22.8	-10.5	-10.5	-18.5	13.2
	4	2	-8.4	-5.6	-5.6	-8.0	-8.0	-6.4	-12.7
	5	0	-8.4	-5.6	-5.6	-8.0	-8.0	-6.4	-12.7
	5	1	-8.4	28.9	28.9	-3.0	-3.0	17.5	-64.5
	5	2	-8.4	80.6	80.6	4.6	4.6	53.5	-142.2
	6	0	-8.4	80.6	80.6	4.6	4.6	53.5	-142.2
	6	1	-8.4	88.8	88.8	5.8	5.8	59.2	-154.5
	6	2	-8.4	97.3	97.3	7.1	7.1	65.2	-167.4
	7	0	-6.4	101.2	101.2	9.4	9.4	68.5	-168.1
	7	1	-6.4	90.2	90.2	7.8	7.8	60.9	-151.5
	7	2	-6.4	79.3	79.3	6.2	6.2	53.2	-135.1
	8	0	6.2	85.7	85.7	17.8	17.8	61.6	-113.5
	8	1	6.2	62.3	62.3	14.4	14.4	45.2	-78.2
	8	2	6.2	41.9	41.9	11.4	11.4	31.0	-47.5

MEMBER STRESSES

DECK & CANOPY MEMBERS
ERECTION OF PRECAST MAIN SPAN: SUPPORTS AT FIRST NODAL ZONES FROM BOTH ENDS

(-) compression
Point 1: Top right
Point 2: Top left
Point 3: Bottom left
Point 4: Bottom right
Point 5: Top center
Point 6: Bottom center

			ERECT MAIN SPAN SELFWEIGHT						
	Member	Station	(P/A) @ Centroid (kips/ft²)	Normal Stress @ Point 1 (kips/ft²)	Normal Stress @ Point 2 (kips/ft²)	Normal Stress @ Point 3 (kips/ft²)	Normal Stress @ Point 4 (kips/ft²)	Normal Stress @ Point 5 (kips/ft²)	Normal Stress @ Point 6 (kips/ft²)
DECK MEMBERS	9	0	6.2	41.9	41.9	11.4	11.4	31.0	-47.5
	9	1	6.2	4.4	4.4	5.9	5.9	5.0	8.8
	9	2	6.2	-13.6	-13.6	3.3	3.3	-7.6	35.9
	10	0	6.2	-13.6	-13.6	3.3	3.3	-7.6	35.9
	10	1	6.2	-12.1	-12.1	3.5	3.5	-6.5	33.7
	10	2	6.2	8.8	8.8	6.6	6.6	8.0	2.2
	11	0	6.2	8.8	8.8	6.6	6.6	8.0	2.2
	11	1	6.2	13.2	13.2	7.2	7.2	11.0	-4.2
	11	2	6.2	17.8	17.8	7.9	7.9	14.3	-11.3
	12	0	6.4	28.5	28.5	9.7	9.7	21.8	-26.7
	12	1	6.4	25.2	25.2	9.2	9.2	19.5	-21.7
	12	2	6.4	21.9	21.9	8.7	8.7	17.2	-16.8
	13	0	7.1	23.5	23.5	9.5	9.5	18.5	-17.5
	13	1	7.1	7.8	7.8	7.2	7.2	7.6	6.0
	13	2	7.1	-5.5	-5.5	5.3	5.3	-1.7	26.0
	14	0	7.1	-5.5	-5.5	5.3	5.3	-1.7	26.0
	14	1	7.1	-32.1	-32.1	1.4	1.4	-20.1	66.0
	14	2	7.1	-35.3	-35.3	0.9	0.9	-22.4	70.9
	15	0	7.1	-35.3	-35.3	0.9	0.9	-22.4	70.9
	15	1	7.1	-15.2	-15.2	3.9	3.9	-8.4	40.8
	15	2	7.1	28.1	28.1	10.2	10.2	21.7	-24.4
	16	0	7.1	28.1	28.1	10.2	10.2	21.7	-24.4
	16	1	7.2	34.7	34.7	11.2	11.2	26.3	-34.2
	16	2	7.2	41.6	41.6	12.2	12.2	31.1	-44.6
	17	0	6.4	34.2	34.2	10.5	10.5	25.8	-35.4
	17	1	6.4	38.9	38.9	11.2	11.2	29.0	-42.5
	17	2	6.4	43.7	43.7	11.9	11.9	32.4	-49.7
	18	0	-2.5	32.7	32.7	2.7	2.7	22.0	-55.3
	18	1	-2.5	20.1	20.1	0.8	0.8	13.2	-36.4
	18	2	-2.5	9.0	9.0	-0.8	-0.8	5.5	-19.7

MEMBER STRESSES

DECK & CANOPY MEMBERS
ERECTION OF PRECAST MAIN SPAN: SUPPORTS AT FIRST NODAL ZONES FROM BOTH ENDS

(-) compression
Point 1: Top right
Point 2: Top left
Point 3: Bottom left
Point 4: Bottom right
Point 5: Top center
Point 6: Bottom center

			ERECT MAIN SPAN SELFWEIGHT						
	Member	Station	(P/A) @ Centroid (kips/ft²)	Normal Stress @ Point 1 (kips/ft²)	Normal Stress @ Point 2 (kips/ft²)	Normal Stress @ Point 3 (kips/ft²)	Normal Stress @ Point 4 (kips/ft²)	Normal Stress @ Point 5 (kips/ft²)	Normal Stress @ Point 6 (kips/ft²)
DECK MEMBERS	19	0	-2.5	9.0	9.0	-0.8	-0.8	5.5	-19.7
	19	1	-2.4	-21.5	-21.5	-5.2	-5.2	-15.7	26.2
	19	2	-2.4	-24.5	-24.5	-5.7	-5.7	-17.8	30.7
	20	0	-2.4	-24.5	-24.5	-5.7	-5.7	-17.8	30.7
	20	1	-2.4	0.0	0.0	-2.1	-2.1	-0.7	-6.1
	20	2	-2.4	52.0	52.0	5.5	5.5	35.4	-84.1
	21	0	-2.4	52.0	52.0	5.5	5.5	35.4	-84.1
	21	1	-2.4	64.0	64.0	7.3	7.3	43.8	-102.2
	21	2	-2.4	76.8	76.8	9.2	9.2	52.7	-121.5
	22	0	-10.3	71.6	71.6	1.7	1.7	46.8	-133.4
	22	1	-10.3	85.1	85.1	3.7	3.7	56.1	-153.6
	22	2	-10.3	98.6	98.6	5.7	5.7	65.5	-174.0
	23	0	-5.8	99.4	99.4	9.6	9.6	67.4	-164.0
	23	1	-5.8	85.6	85.6	7.5	7.5	57.8	-143.3
	23	2	-5.8	72.5	72.5	5.6	5.6	48.7	-123.6
	24	0	-5.8	72.5	72.5	5.6	5.6	48.7	-123.6
	24	1	-5.8	2.8	2.8	-4.6	-4.6	0.2	-18.7
	24	2	-5.8	-35.5	-35.5	-10.1	-10.1	-26.4	38.8
	25	0	-5.8	-35.5	-35.5	-10.1	-10.1	-26.4	38.8
	25	1	-5.8	-42.2	-42.2	-11.1	-11.1	-31.1	48.9
	25	2	-5.8	-17.5	-17.5	-7.5	-7.5	-13.9	11.8
	26	0	-5.8	-17.5	-17.5	-7.5	-7.5	-13.9	11.8
	26	1	-5.8	-6.0	-6.0	-5.8	-5.8	-6.0	-5.4
	26	2	-5.8	7.5	7.5	-3.8	-3.8	3.4	-25.7
	27	0	0.2	11.6	11.6	1.9	1.9	8.1	-17.0
	27	1	0.2	10.4	10.4	1.7	1.7	7.3	-15.2
	27	2	0.2	9.2	9.2	1.5	1.5	6.5	-13.4
	28	0	0.0	0.3	0.3	0.0	0.0	0.2	-0.4
	28	1	0.0	0.1	0.1	0.0	0.0	0.0	-0.1
	28	2	0.0	0.0	0.0	0.0	0.0	0.0	0.0
	60	0	0.0	0.0	0.0	0.0	0.0	0.0	0.0
	60	1	0.0	0.1	0.1	0.0	0.0	0.1	-0.2
	60	2	0.0	0.6	0.6	0.1	0.1	0.4	-0.9

MEMBER STRESSES

DECK & CANOPY MEMBERS
ERECTION OF PRECAST MAIN SPAN: SUPPORTS AT FIRST NODAL ZONES FROM BOTH ENDS

(-) compression
Point 1: Top right
Point 2: Top left
Point 3: Bottom left
Point 4: Bottom right
Point 5: Top center
Point 6: Bottom center

			ERECT MAIN SPAN SELFWEIGHT						
	Member	Station	(P/A) @ Centroid (kips/ft²)	Normal Stress @ Point 1 (kips/ft²)	Normal Stress @ Point 2 (kips/ft²)	Normal Stress @ Point 3 (kips/ft²)	Normal Stress @ Point 4 (kips/ft²)	Normal Stress @ Point 5 (kips/ft²)	Normal Stress @ Point 6 (kips/ft²)
CANOPY MEMBERS	101	2	0.0	-27.0	-27.0	29.6	29.6	-20.9	5.5
	102	0	0.0	-27.0	-27.0	29.6	29.6	-20.9	5.5
	102	1	0.0	-75.8	-75.8	83.3	83.3	-58.9	15.6
	102	2	0.0	-72.6	-72.6	79.7	79.7	-56.4	15.0
	103	0	0.0	-72.6	-72.6	79.7	79.7	-56.4	15.0
	103	1	0.0	-18.3	-18.3	20.1	20.1	-14.2	3.8
	103	2	0.0	86.9	86.9	-95.3	-95.3	67.5	-17.8
	104	0	0.0	86.9	86.9	-95.3	-95.3	67.5	-17.8
	105	0	0.2	0.2	0.2	0.1	0.1	0.2	0.1
	105	1	0.2	0.2	0.2	0.2	0.2	0.2	0.2
	105	2	0.2	0.1	0.1	0.2	0.2	0.1	0.2
	106	2	17.3	152.6	152.6	-131.1	-131.1	122.4	-10.5
	107	0	17.4	152.6	152.6	-131.1	-131.1	122.4	-10.5
	107	1	17.4	62.4	62.4	-32.1	-32.1	52.4	8.1
	107	2	17.4	4.5	4.5	31.5	31.5	7.4	20.0
	108	0	17.4	4.5	4.5	31.5	31.5	7.4	20.0
	108	1	17.4	-25.6	-25.6	64.6	64.6	-16.0	26.2
	108	2	17.4	-30.5	-30.5	70.0	70.0	-19.8	27.2
	109	0	17.4	-30.5	-30.5	70.0	70.0	-19.8	27.2
	109	1	17.4	-26.1	-26.1	65.1	65.1	-16.4	26.3
	109	2	17.4	-17.9	-17.9	56.1	56.1	-10.0	24.7
	110	0	0.0	0.0	0.0	0.0	0.0	0.0	0.0
	110	1	0.0	0.0	0.0	0.0	0.0	0.0	0.0
	110	2	0.0	0.0	0.0	-0.1	-0.1	0.0	0.0
	111	0	-18.0	36.1	36.1	-77.3	-77.3	24.1	-29.1
	111	1	-18.0	23.4	23.4	-63.4	-63.4	14.2	-26.5
	111	2	-18.0	11.7	11.7	-50.5	-50.5	5.1	-24.0
	112	0	-18.0	11.7	11.7	-50.5	-50.5	5.1	-24.0
	112	1	-17.9	-41.4	-41.4	7.8	7.8	-36.1	-13.1
	112	2	-17.9	-60.3	-60.3	28.6	28.6	-50.9	-9.2
	113	0	-17.9	-60.3	-60.3	28.6	28.6	-50.9	-9.2
	113	1	-17.9	-50.8	-50.8	18.1	18.1	-43.5	-11.2
	113	2	-17.9	-13.9	-13.9	-22.3	-22.3	-14.8	-18.7
	114	0	-17.92	-13.93	-13.93	-22.29	-22.29	-14.82	-18.74

MEMBER STRESSES

DECK & CANOPY MEMBERS
ERECTION OF PRECAST MAIN SPAN: SUPPORTS AT FIRST NODAL ZONES FROM BOTH ENDS

(-) compression
Point 1: Top right
Point 2: Top left
Point 3: Bottom left
Point 4: Bottom right
Point 5: Top center
Point 6: Bottom center

			ERECT MAIN SPAN SELFWEIGHT						
	Member	Station	(P/A) @ Centroid (kips/ft²)	Normal Stress @ Point 1 (kips/ft²)	Normal Stress @ Point 2 (kips/ft²)	Normal Stress @ Point 3 (kips/ft²)	Normal Stress @ Point 4 (kips/ft²)	Normal Stress @ Point 5 (kips/ft²)	Normal Stress @ Point 6 (kips/ft²)
CANOPY MEMBERS	114	1	-17.91	2.26	2.26	-40.06	-40.06	-2.24	-22.07
	114	2	-17.91	21.25	21.25	-60.91	-60.91	12.52	-25.97
	115	0	-0.24	-0.23	-0.23	-0.24	-0.24	-0.23	-0.24
	115	1	-0.24	-0.25	-0.25	-0.23	-0.23	-0.24	-0.23
	115	2	-0.24	-0.20	-0.20	-0.27	-0.27	-0.21	-0.24
	116	0	-17.70	6.04	6.04	-43.77	-43.77	0.75	-22.59
	116	1	-17.70	-2.49	-2.49	-34.40	-34.40	-5.88	-20.83
	116	2	-17.70	-10.28	-10.28	-25.84	-25.84	-11.93	-19.22
	117	0	-17.70	-10.28	-10.28	-25.84	-25.84	-11.93	-19.22
	117	1	-17.68	-45.60	-45.60	12.97	12.97	-39.38	-11.94
	117	2	-17.68	-46.17	-46.17	13.61	13.61	-39.82	-11.81
	118	0	-17.68	-46.17	-46.17	13.61	13.61	-39.82	-11.81
	118	1	-17.67	-16.53	-16.53	-18.91	-18.91	-16.79	-17.90
	118	2	-17.66	42.79	42.79	-84.03	-84.03	29.32	-30.10
	119	0	-17.66	42.79	42.79	-84.03	-84.03	29.32	-30.10
	119	1	-17.66	59.23	59.23	-102.08	-102.08	42.10	-33.49
	119	2	-17.66	77.31	77.31	-121.92	-121.92	56.15	-37.21
	120	0	0.09	0.19	0.19	-0.03	-0.03	0.17	0.06
	120	1	0.09	0.08	0.08	0.09	0.09	0.08	0.09
	120	2	0.09	0.04	0.04	0.14	0.14	0.05	0.10
	121	0	28.77	80.91	80.91	-28.49	-28.49	69.29	18.03
	121	1	28.77	70.57	70.57	-17.12	-17.12	61.25	20.16
	121	2	28.77	61.04	61.04	-6.66	-6.66	53.85	22.13
	122	0	28.77	61.04	61.04	-6.66	-6.66	53.85	22.13
	122	1	28.78	16.48	16.48	42.28	42.28	19.22	31.31
	122	2	28.79	7.36	7.36	52.32	52.32	12.13	33.20
	123	0	28.79	7.36	7.36	52.32	52.32	12.13	33.20
	123	1	28.80	31.07	31.07	26.31	26.31	30.56	28.33
	123	2	28.81	87.83	87.83	-36.00	-36.00	74.68	16.66
	124	0	28.81	87.83	87.83	-36.00	-36.00	74.68	16.66
	124	1	28.81	97.52	97.52	-46.63	-46.63	82.21	14.66
	124	2	28.81	107.83	107.83	-57.95	-57.95	90.22	12.54
	125	0	0.18	0.16	0.16	0.21	0.21	0.16	0.19
	125	1	0.18	0.17	0.17	0.19	0.19	0.17	0.18

MEMBER STRESSES

DECK & CANOPY MEMBERS
ERECTION OF PRECAST MAIN SPAN: SUPPORTS AT FIRST NODAL ZONES FROM BOTH ENDS

(-) compression
Point 1: Top right
Point 2: Top left
Point 3: Bottom left
Point 4: Bottom right
Point 5: Top center
Point 6: Bottom center

			ERECT MAIN SPAN SELFWEIGHT						
	Member	Station	(P/A) @ Centroid (kips/ft²)	Normal Stress @ Point 1 (kips/ft²)	Normal Stress @ Point 2 (kips/ft²)	Normal Stress @ Point 3 (kips/ft²)	Normal Stress @ Point 4 (kips/ft²)	Normal Stress @ Point 5 (kips/ft²)	Normal Stress @ Point 6 (kips/ft²)
CANOPY MEMBERS	125	2	0.18	0.27	0.27	0.08	0.08	0.25	0.16
	126	0	-0.60	91.49	91.49	-101.70	-101.70	70.97	-19.55
	126	1	-0.59	69.91	69.91	-78.00	-78.00	54.20	-15.11
	126	2	-0.59	50.60	50.60	-56.79	-56.79	39.19	-11.13
	127	0	-0.59	50.59	50.59	-56.79	-56.79	39.19	-11.13
	127	1	-0.58	-2.11	-2.11	1.10	1.10	-1.77	-0.27
	127	2	-0.58	-28.10	-28.10	29.64	29.64	-21.96	5.09
	128	0	-0.58	-28.10	-28.10	29.64	29.64	-21.96	5.09
	128	1	-0.57	-28.16	-28.16	29.73	29.73	-22.01	5.11
	128	2	-0.56	-1.87	-1.87	0.88	0.88	-1.58	-0.29
	129	0	-0.56	-1.87	-1.87	0.88	0.88	-1.58	-0.29
	129	1	-0.56	0.67	0.67	-1.91	-1.91	0.40	-0.81
	129	2	-0.56	3.31	3.31	-4.81	-4.81	2.45	-1.36
	130	0	-0.55	3.33	3.33	-4.80	-4.80	2.46	-1.34
	130	1	-0.54	7.48	7.48	-9.36	-9.36	5.70	-2.20
	130	2	-0.54	11.87	11.87	-14.18	-14.18	9.11	-3.10
	131	0	0.00	0.47	0.47	-0.51	-0.51	0.36	-0.10
	131	1	0.00	0.12	0.12	-0.13	-0.13	0.09	-0.02
	131	2	0.00	0.00	0.00	0.00	0.00	0.00	0.00

MEMBER STRESSES

DECK & CANOPY MEMBERS
ERECTION OF PRECAST MAIN SPAN: S

(-) compression
Point 1: Top right
Point 2: Top left
Point 3: Bottom left
Point 4: Bottom right
Point 5: Top center
Point 6: Bottom center

			STRESS DECK PT						
	Member	Station	(P/A) @ Centroid (kips/ft²)	Normal Stress @ Point 1 (kips/ft²)	Normal Stress @ Point 2 (kips/ft²)	Normal Stress @ Point 3 (kips/ft²)	Normal Stress @ Point 4 (kips/ft²)	Normal Stress @ Point 5 (kips/ft²)	Normal Stress @ Point 6 (kips/ft²)
DECK MEMBERS	1	0	-182.1	-54.0	-54.0	-163.4	-163.4	-92.9	-374.7
	1	1	-182.1	-61.9	-61.9	-164.5	-164.5	-98.5	-362.8
	1	2	-182.1	-69.9	-69.9	-165.7	-165.7	-104.0	-350.9
	2	0	-182.1	-69.9	-69.9	-165.7	-165.7	-104.0	-350.9
	2	1	-182.1	-96.8	-96.8	-169.7	-169.7	-122.8	-310.3
	2	2	-182.2	-123.7	-123.7	-173.6	-173.6	-141.5	-270.0
	3	0	-189.8	-138.6	-138.6	-182.3	-182.3	-154.2	-266.7
	3	1	-196.6	-212.3	-212.3	-198.9	-198.9	-207.5	-172.9
	3	2	-196.7	-215.6	-215.6	-199.5	-199.5	-209.8	-168.3
	4	0	-196.7	-215.6	-215.6	-199.5	-199.5	-209.8	-168.3
	4	1	-196.9	-210.1	-210.1	-198.8	-198.8	-206.1	-177.2
	4	2	-197.1	-187.2	-187.2	-195.7	-195.7	-190.3	-212.0
	5	0	-197.1	-187.2	-187.2	-195.7	-195.7	-190.3	-212.0
	5	1	-197.4	-147.3	-147.3	-190.0	-190.0	-162.5	-272.7
	5	2	-197.6	-90.0	-90.0	-181.9	-181.9	-122.7	-359.3
	6	0	-197.6	-90.0	-90.0	-181.9	-181.9	-122.7	-359.3
	6	1	-197.6	-81.1	-81.1	-180.6	-180.6	-116.5	-372.8
	6	2	-197.6	-71.8	-71.8	-179.2	-179.2	-110.0	-386.8
	7	0	-195.9	-74.8	-74.8	-178.2	-178.2	-111.6	-378.1
	7	1	-195.9	-85.8	-85.8	-179.8	-179.8	-119.3	-361.5
	7	2	-195.9	-96.8	-96.8	-181.5	-181.5	-126.9	-345.0
	8	0	-183.3	-91.3	-91.3	-169.9	-169.9	-119.3	-321.7
	8	1	-183.4	-114.7	-114.7	-173.4	-173.4	-135.6	-286.7
	8	2	-183.5	-135.0	-135.0	-176.4	-176.4	-149.7	-256.4

MEMBER STRESSES

DECK & CANOPY MEMBERS
ERECTION OF PRECAST MAIN SPAN: S

(-) compression
Point 1: Top right
Point 2: Top left
Point 3: Bottom left
Point 4: Bottom right
Point 5: Top center
Point 6: Bottom center

			STRESS DECK PT						
	Member	Station	(P/A) @ Centroid (kips/ft²)	Normal Stress @ Point 1 (kips/ft²)	Normal Stress @ Point 2 (kips/ft²)	Normal Stress @ Point 3 (kips/ft²)	Normal Stress @ Point 4 (kips/ft²)	Normal Stress @ Point 5 (kips/ft²)	Normal Stress @ Point 6 (kips/ft²)
DECK MEMBERS	9	0	-183.5	-135.0	-135.0	-176.4	-176.4	-149.7	-256.4
	9	1	-183.7	-172.1	-172.1	-182.0	-182.0	-175.6	-201.2
	9	2	-184.0	-189.8	-189.8	-184.8	-184.8	-188.0	-175.3
	10	0	-184.0	-189.8	-189.8	-184.8	-184.8	-188.0	-175.3
	10	1	-184.2	-188.0	-188.0	-184.8	-184.8	-186.8	-178.6
	10	2	-184.5	-166.7	-166.7	-181.9	-181.9	-172.1	-211.1
	11	0	-184.5	-166.7	-166.7	-181.9	-181.9	-172.1	-211.1
	11	1	-184.5	-162.3	-162.3	-181.2	-181.2	-169.1	-217.7
	11	2	-184.5	-157.7	-157.7	-180.6	-180.6	-165.8	-224.9
	12	0	-184.5	-151.7	-151.7	-179.7	-179.7	-161.6	-233.8
	12	1	-184.5	-155.0	-155.0	-180.2	-180.2	-164.0	-228.7
	12	2	-184.5	-158.3	-158.3	-180.7	-180.7	-166.3	-223.8
	13	0	-183.6	-156.9	-156.9	-179.7	-179.7	-165.1	-223.8
	13	1	-183.7	-172.4	-172.4	-182.1	-182.1	-175.8	-200.8
	13	2	-183.8	-185.4	-185.4	-184.0	-184.0	-184.9	-181.4
	14	0	-183.8	-185.4	-185.4	-184.0	-184.0	-184.9	-181.4
	14	1	-184.1	-211.3	-211.3	-188.1	-188.1	-203.0	-143.1
	14	2	-184.3	-213.8	-213.8	-188.6	-188.6	-204.9	-140.0
	15	0	-184.3	-213.8	-213.8	-188.6	-188.6	-204.9	-140.0
	15	1	-184.6	-193.0	-193.0	-185.8	-185.8	-190.5	-171.9
	15	2	-184.8	-148.9	-148.9	-179.6	-179.6	-159.8	-238.8
	16	0	-184.8	-148.9	-148.9	-179.6	-179.6	-159.8	-238.8
	16	1	-184.8	-142.2	-142.2	-178.6	-178.6	-155.2	-248.9
	16	2	-184.9	-135.3	-135.3	-177.6	-177.6	-150.4	-259.5
	17	0	-185.8	-146.3	-146.3	-180.0	-180.0	-158.3	-245.1
	17	1	-185.8	-141.6	-141.6	-179.3	-179.3	-155.0	-252.2
	17	2	-185.8	-136.8	-136.8	-178.6	-178.6	-151.7	-259.4
	18	0	-194.5	-147.4	-147.4	-187.6	-187.6	-161.7	-265.4
	18	1	-194.6	-159.8	-159.8	-189.5	-189.5	-170.4	-246.9
	18	2	-194.6	-170.7	-170.7	-191.1	-191.1	-178.0	-230.6

MEMBER STRESSES

DECK & CANOPY MEMBERS
ERECTION OF PRECAST MAIN SPAN: S

(-) compression
Point 1: Top right
Point 2: Top left
Point 3: Bottom left
Point 4: Bottom right
Point 5: Top center
Point 6: Bottom center

			STRESS DECK PT						
	Member	Station	(P/A) @ Centroid (kips/ft²)	Normal Stress @ Point 1 (kips/ft²)	Normal Stress @ Point 2 (kips/ft²)	Normal Stress @ Point 3 (kips/ft²)	Normal Stress @ Point 4 (kips/ft²)	Normal Stress @ Point 5 (kips/ft²)	Normal Stress @ Point 6 (kips/ft²)
DECK MEMBERS	19	0	-194.6	-170.7	-170.7	-191.1	-191.1	-178.0	-230.6
	19	1	-194.9	-200.4	-200.4	-195.7	-195.7	-198.7	-186.8
	19	2	-195.2	-202.5	-202.5	-196.3	-196.3	-200.3	-184.2
	20	0	-195.2	-202.5	-202.5	-196.3	-196.3	-200.3	-184.2
	20	1	-195.5	-177.2	-177.2	-192.8	-192.8	-182.8	-222.9
	20	2	-195.8	-124.5	-124.5	-185.3	-185.3	-146.1	-302.9
	21	0	-195.8	-124.5	-124.5	-185.3	-185.3	-146.1	-302.9
	21	1	-195.8	-112.3	-112.3	-183.6	-183.6	-137.7	-321.3
	21	2	-195.8	-99.3	-99.3	-181.7	-181.7	-128.6	-341.0
	22	0	-203.7	-105.6	-105.6	-189.4	-189.4	-135.4	-351.2
	22	1	-203.7	-92.2	-92.2	-187.4	-187.4	-126.1	-371.4
	22	2	-203.8	-78.7	-78.7	-185.5	-185.5	-116.7	-391.8
	23	0	-199.3	-74.9	-74.9	-181.1	-181.1	-112.7	-386.2
	23	1	-199.3	-89.4	-89.4	-183.3	-183.3	-122.8	-364.6
	23	2	-199.4	-103.2	-103.2	-185.3	-185.3	-132.4	-344.0
	24	0	-199.4	-103.2	-103.2	-185.3	-185.3	-132.4	-344.0
	24	1	-199.7	-177.4	-177.4	-196.4	-196.4	-184.2	-233.1
	24	2	-199.7	-220.0	-220.0	-202.7	-202.7	-213.8	-169.3
	25	0	-199.7	-220.0	-220.0	-202.7	-202.7	-213.8	-169.3
	25	1	-199.4	-230.6	-230.6	-204.0	-204.0	-221.1	-152.4
	25	2	-199.1	-209.8	-209.8	-200.6	-200.6	-206.5	-183.0
	26	0	-199.1	-209.8	-209.8	-200.6	-200.6	-206.5	-183.0
	26	1	-199.0	-199.4	-199.4	-199.1	-199.1	-199.3	-198.4
	26	2	-195.3	-125.1	-125.1	-185.1	-185.1	-146.5	-300.9
	27	0	-189.8	-122.6	-122.6	-180.0	-180.0	-143.1	-290.9
	27	1	-189.8	-113.5	-113.5	-178.7	-178.7	-136.7	-304.6
	27	2	-189.8	-104.3	-104.3	-177.3	-177.3	-130.3	-318.4
	28	0	-189.9	-110.9	-110.9	-178.4	-178.4	-134.9	-308.7
	28	1	-189.9	-89.6	-89.6	-175.2	-175.2	-120.1	-340.7
	28	2	0.0	0.0	0.0	0.0	0.0	0.0	0.0
	60	0	0.0	0.0	0.0	0.0	0.0	0.0	0.0
	60	1	-181.9	6.8	6.8	-154.3	-154.3	-50.5	-465.6
	60	2	-181.9	-44.2	-44.2	-161.8	-161.8	-86.0	-389.0

MEMBER STRESSES

DECK & CANOPY MEMBERS
ERECTION OF PRECAST MAIN SPAN: S

(-) compression
Point 1: Top right
Point 2: Top left
Point 3: Bottom left
Point 4: Bottom right
Point 5: Top center
Point 6: Bottom center

			STRESS DECK PT						
	Member	Station	(P/A) @ Centroid (kips/ft²)	Normal Stress @ Point 1 (kips/ft²)	Normal Stress @ Point 2 (kips/ft²)	Normal Stress @ Point 3 (kips/ft²)	Normal Stress @ Point 4 (kips/ft²)	Normal Stress @ Point 5 (kips/ft²)	Normal Stress @ Point 6 (kips/ft²)
CANOPY MEMBERS	101	2	0.6	-34.3	-34.3	38.9	38.9	-26.5	7.8
	102	0	0.6	-34.3	-34.3	38.9	38.9	-26.5	7.8
	102	1	0.6	-77.2	-77.2	86.0	86.0	-59.9	16.6
	102	2	0.6	-68.0	-68.0	75.9	75.9	-52.7	14.7
	103	0	0.6	-68.0	-68.0	75.9	75.9	-52.7	14.7
	103	1	0.6	-7.7	-7.7	9.8	9.8	-5.9	2.3
	103	2	0.6	103.3	103.3	-112.1	-112.1	80.4	-20.5
	104	0	0.6	103.3	103.3	-112.1	-112.1	80.4	-20.5
	105	0	0.2	0.2	0.2	0.1	0.1	0.2	0.1
	105	1	0.2	0.2	0.2	0.2	0.2	0.2	0.2
	105	2	0.2	0.1	0.1	0.2	0.2	0.1	0.2
	106	2	16.6	162.8	162.8	-144.0	-144.0	130.2	-13.5
	107	0	16.6	162.8	162.8	-144.0	-144.0	130.2	-13.5
	107	1	16.6	75.0	75.0	-47.5	-47.5	62.0	4.6
	107	2	16.6	19.4	19.4	13.5	13.5	18.8	16.0
	108	0	16.6	19.4	19.4	13.5	13.5	18.8	16.0
	108	1	16.6	-8.5	-8.5	44.2	44.2	-2.9	21.8
	108	2	16.6	-11.2	-11.2	47.1	47.1	-5.0	22.3
	109	0	16.6	-11.2	-11.2	47.1	47.1	-5.0	22.3
	109	1	16.6	-6.0	-6.0	41.4	41.4	-0.9	21.3
	109	2	16.6	3.0	3.0	31.6	31.6	6.0	19.4
	110	0	0.0	0.0	0.0	0.0	0.0	0.0	0.0
	110	1	0.0	0.0	0.0	0.0	0.0	0.0	0.0
	110	2	0.0	0.0	0.0	-0.1	-0.1	0.0	0.0
	111	0	-18.5	40.7	40.7	-83.6	-83.6	27.5	-30.7
	111	1	-18.5	28.6	28.6	-70.3	-70.3	18.1	-28.2
	111	2	-18.5	17.4	17.4	-58.0	-58.0	9.4	-25.9
	112	0	-18.5	17.4	17.4	-58.0	-58.0	9.4	-25.9
	112	1	-18.5	-31.8	-31.8	-3.9	-3.9	-28.9	-15.8
	112	2	-18.5	-47.1	-47.1	12.8	12.8	-40.7	-12.6
	113	0	-18.5	-47.1	-47.1	12.8	12.8	-40.7	-12.6
	113	1	-18.5	-33.9	-33.9	-1.6	-1.6	-30.5	-15.3
	113	2	-18.5	6.6	6.6	-46.1	-46.1	1.0	-23.7
	114	0	-18.51	6.60	6.60	-46.07	-46.07	1.00	-23.67

MEMBER STRESSES

DECK & CANOPY MEMBERS
ERECTION OF PRECAST MAIN SPAN: S

(-) compression
Point 1: Top right
Point 2: Top left
Point 3: Bottom left
Point 4: Bottom right
Point 5: Top center
Point 6: Bottom center

			STRESS DECK PT						
	Member	Station	(P/A) @ Centroid (kips/ft²)	Normal Stress @ Point 1 (kips/ft²)	Normal Stress @ Point 2 (kips/ft²)	Normal Stress @ Point 3 (kips/ft²)	Normal Stress @ Point 4 (kips/ft²)	Normal Stress @ Point 5 (kips/ft²)	Normal Stress @ Point 6 (kips/ft²)
CANOPY MEMBERS	114	1	-18.50	23.84	23.84	-64.99	-64.99	14.40	-27.22
	114	2	-18.50	43.87	43.87	-86.98	-86.98	29.97	-31.34
	115	0	-0.25	-0.24	-0.24	-0.25	-0.25	-0.24	-0.25
	115	1	-0.25	-0.25	-0.25	-0.24	-0.24	-0.25	-0.24
	115	2	-0.24	-0.21	-0.21	-0.29	-0.29	-0.22	-0.25
	116	0	-18.42	15.69	15.69	-55.87	-55.87	8.09	-25.44
	116	1	-18.42	7.42	7.42	-46.79	-46.79	1.66	-23.74
	116	2	-18.42	-0.11	-0.11	-38.52	-38.52	-4.19	-22.19
	117	0	-18.42	-0.11	-0.11	-38.52	-38.52	-4.19	-22.18
	117	1	-18.40	-33.55	-33.55	-1.78	-1.78	-30.17	-15.29
	117	2	-18.40	-32.23	-32.23	-3.21	-3.21	-29.14	-15.55
	118	0	-18.40	-32.22	-32.22	-3.21	-3.21	-29.14	-15.55
	118	1	-18.39	-0.74	-0.74	-37.76	-37.76	-4.67	-22.02
	118	2	-18.38	60.43	60.43	-104.91	-104.91	42.87	-34.60
	119	0	-18.38	60.43	60.43	-104.91	-104.91	42.87	-34.60
	119	1	-18.38	77.26	77.26	-123.38	-123.38	55.95	-38.07
	119	2	-18.38	95.73	95.73	-143.65	-143.65	70.30	-41.86
	120	0	0.08	0.18	0.18	-0.04	-0.04	0.16	0.05
	120	1	0.08	0.07	0.07	0.08	0.08	0.07	0.08
	120	2	0.08	0.03	0.03	0.13	0.13	0.04	0.09
	121	0	27.76	94.51	94.51	-45.53	-45.53	79.64	14.02
	121	1	27.76	84.35	84.35	-34.38	-34.38	71.74	16.11
	121	2	27.76	75.01	75.01	-24.12	-24.12	64.48	18.03
	122	0	27.76	75.01	75.01	-24.12	-24.12	64.48	18.03
	122	1	27.77	31.79	31.79	23.35	23.35	30.90	26.94
	122	2	27.78	24.01	24.01	31.92	31.92	24.85	28.56
	123	0	27.78	24.01	24.01	31.92	31.92	24.85	28.56
	123	1	27.79	49.05	49.05	4.44	4.44	44.31	23.41
	123	2	27.80	107.16	107.16	-59.33	-59.33	89.47	11.46
	124	0	27.80	107.16	107.16	-59.33	-59.33	89.47	11.46
	124	1	27.80	117.01	117.01	-70.14	-70.14	97.13	9.43
	124	2	27.80	127.48	127.48	-81.64	-81.64	105.27	7.28
	125	0	0.18	0.16	0.16	0.20	0.20	0.16	0.18
	125	1	0.18	0.17	0.17	0.19	0.19	0.17	0.18

MEMBER STRESSES

DECK & CANOPY MEMBERS
ERECTION OF PRECAST MAIN SPAN: S

(-) compression
Point 1: Top right
Point 2: Top left
Point 3: Bottom left
Point 4: Bottom right
Point 5: Top center
Point 6: Bottom center

			STRESS DECK PT						
	Member	Station	(P/A) @ Centroid (kips/ft²)	Normal Stress @ Point 1 (kips/ft²)	Normal Stress @ Point 2 (kips/ft²)	Normal Stress @ Point 3 (kips/ft²)	Normal Stress @ Point 4 (kips/ft²)	Normal Stress @ Point 5 (kips/ft²)	Normal Stress @ Point 6 (kips/ft²)
CANOPY MEMBERS	125	2	0.18	0.27	0.27	0.08	0.08	0.25	0.16
	126	0	-0.38	121.49	121.49	-134.18	-134.18	94.33	-25.47
	126	1	-0.38	97.71	97.71	-108.07	-108.07	75.85	-20.57
	126	2	-0.37	76.20	76.20	-84.45	-84.45	59.14	-16.14
	127	0	-0.38	76.20	76.20	-84.45	-84.45	59.14	-16.14
	127	1	-0.37	15.27	15.27	-17.54	-17.54	11.79	-3.59
	127	2	-0.36	-18.93	-18.93	20.03	20.03	-14.79	3.46
	128	0	-0.36	-18.93	-18.93	20.03	20.03	-14.79	3.46
	128	1	-0.35	-27.30	-27.30	29.24	29.24	-21.30	5.20
	128	2	-0.34	-9.33	-9.33	9.52	9.52	-7.32	1.51
	129	0	-0.34	-9.33	-9.33	9.52	9.52	-7.32	1.51
	129	1	-0.34	-7.31	-7.31	7.31	7.31	-5.76	1.09
	129	2	-0.34	-5.19	-5.19	4.98	4.98	-4.11	0.66
	130	0	-0.33	-5.18	-5.18	4.99	4.99	-4.10	0.67
	130	1	-0.33	-1.81	-1.81	1.30	1.30	-1.48	-0.03
	130	2	-0.33	1.79	1.79	-2.66	-2.66	1.32	-0.76
	131	0	0.00	0.47	0.47	-0.51	-0.51	0.36	-0.10
	131	1	0.00	0.12	0.12	-0.13	-0.13	0.09	-0.02
	131	2	0.00	0.00	0.00	0.00	0.00	0.00	0.00

MEMBER STRESSES

DECK & CANOPY MEMBERS
ERECTION OF PRECAST MAIN SPAN: S

(-) compression
Point 1: Top right
Point 2: Top left
Point 3: Bottom left
Point 4: Bottom right
Point 5: Top center σ_{t_allow} = 3sqrt(f'c) = 39.8 ksf
Point 6: Bottom center σ_{c_allow} = 0.6(f'c) = -734.4 ksf

			STRESS CANOPY PT						
	Member	Station	(P/A) @ Centroid (kips/ft²)	Normal Stress @ Point 1 (kips/ft²)	Normal Stress @ Point 2 (kips/ft²)	Normal Stress @ Point 3 (kips/ft²)	Normal Stress @ Point 4 (kips/ft²)	Normal Stress @ Point 5 (kips/ft²)	Normal Stress @ Point 6 (kips/ft²)
DECK MEMBERS	1	0	-182.4	-64.7	-64.7	-165.2	-165.2	-100.5	-359.3
	1	1	-182.4	-72.6	-72.6	-166.3	-166.3	-105.9	-347.5
	1	2	-182.4	-80.4	-80.4	-167.5	-167.5	-111.4	-335.6
	2	0	-182.4	-80.4	-80.4	-167.5	-167.5	-111.4	-335.6
	2	1	-182.4	-107.2	-107.2	-171.4	-171.4	-130.0	-295.5
	2	2	-182.4	-133.8	-133.8	-175.3	-175.3	-148.6	-255.4
	3	0	-190.3	-146.4	-146.4	-183.9	-183.9	-159.7	-256.3
	3	1	-197.1	-219.8	-219.8	-200.4	-200.4	-212.9	-163.0
	3	2	-197.2	-222.7	-222.7	-200.9	-200.9	-215.0	-158.7
	4	0	-197.2	-222.7	-222.7	-200.9	-200.9	-215.0	-158.7
	4	1	-197.4	-216.6	-216.6	-200.2	-200.2	-210.8	-168.6
	4	2	-197.6	-193.2	-193.2	-197.0	-197.0	-194.5	-204.3
	5	0	-197.6	-193.2	-193.2	-197.0	-197.0	-194.5	-204.3
	5	1	-197.9	-152.6	-152.6	-191.2	-191.2	-166.3	-265.9
	5	2	-198.1	-94.7	-94.7	-183.0	-183.0	-126.1	-353.4
	6	0	-198.1	-94.7	-94.7	-183.0	-183.0	-126.1	-353.4
	6	1	-198.1	-85.7	-85.7	-181.6	-181.6	-119.8	-367.1
	6	2	-198.1	-76.3	-76.3	-180.3	-180.3	-113.3	-381.2
	7	0	-196.5	-81.6	-81.6	-179.7	-179.7	-116.5	-369.3
	7	1	-196.5	-92.7	-92.7	-181.3	-181.3	-124.2	-352.6
	7	2	-196.5	-103.7	-103.7	-183.0	-183.0	-131.9	-336.0
	8	0	-183.8	-97.6	-97.6	-171.2	-171.2	-123.8	-313.2
	8	1	-183.9	-121.0	-121.0	-174.7	-174.7	-140.1	-278.4
	8	2	-184.0	-141.2	-141.2	-177.7	-177.7	-154.2	-248.3

MEMBER STRESSES

DECK & CANOPY MEMBERS
ERECTION OF PRECAST MAIN SPAN: S

(-) compression
Point 1: Top right
Point 2: Top left
Point 3: Bottom left
Point 4: Bottom right
Point 5: Top center σ_{t_allow} = 3sqrt(f'c) = 39.8 ksf
Point 6: Bottom center σ_{c_allow} = 0.6(f'c) = -734.4 ksf

	Member	Station	STRESS CANOPY PT (P/A) @ Centroid (kips/ft²)	Normal Stress @ Point 1 (kips/ft²)	Normal Stress @ Point 2 (kips/ft²)	Normal Stress @ Point 3 (kips/ft²)	Normal Stress @ Point 4 (kips/ft²)	Normal Stress @ Point 5 (kips/ft²)	Normal Stress @ Point 6 (kips/ft²)
DECK MEMBERS	9	0	-184.0	-141.2	-141.2	-177.7	-177.7	-154.2	-248.3
	9	1	-184.2	-178.1	-178.1	-183.3	-183.3	-179.9	-193.4
	9	2	-184.4	-195.5	-195.5	-186.0	-186.0	-192.1	-167.8
	10	0	-184.4	-195.5	-195.5	-186.0	-186.0	-192.1	-167.8
	10	1	-184.7	-193.5	-193.5	-185.9	-185.9	-190.8	-171.4
	10	2	-184.9	-172.0	-172.0	-183.0	-183.0	-175.9	-204.3
	11	0	-184.9	-172.0	-172.0	-183.0	-183.0	-175.9	-204.3
	11	1	-184.9	-167.6	-167.6	-182.4	-182.4	-172.9	-210.9
	11	2	-185.0	-162.9	-162.9	-181.7	-181.7	-169.6	-218.1
	12	0	-185.0	-159.7	-159.7	-181.3	-181.3	-167.4	-223.0
	12	1	-185.0	-163.1	-163.1	-181.8	-181.8	-169.8	-217.9
	12	2	-185.0	-166.5	-166.5	-182.3	-182.3	-172.1	-212.9
	13	0	-184.1	-164.1	-164.1	-181.2	-181.2	-170.2	-214.2
	13	1	-184.2	-179.4	-179.4	-183.5	-183.5	-180.8	-191.4
	13	2	-184.3	-192.3	-192.3	-185.4	-185.4	-189.9	-172.2
	14	0	-184.3	-192.3	-192.3	-185.4	-185.4	-189.9	-172.2
	14	1	-184.5	-217.8	-217.8	-189.4	-189.4	-207.7	-134.6
	14	2	-184.8	-219.9	-219.9	-189.9	-189.9	-209.2	-132.0
	15	0	-184.8	-219.9	-219.9	-189.9	-189.9	-209.2	-132.0
	15	1	-185.0	-198.6	-198.6	-187.0	-187.0	-194.5	-164.6
	15	2	-185.3	-154.1	-154.1	-180.7	-180.7	-163.6	-232.2
	16	0	-185.3	-154.1	-154.1	-180.7	-180.7	-163.6	-232.2
	16	1	-185.3	-147.4	-147.4	-179.8	-179.8	-158.9	-242.4
	16	2	-185.4	-140.4	-140.4	-178.8	-178.8	-154.0	-253.0
	17	0	-186.3	-153.8	-153.8	-181.5	-181.5	-163.7	-235.1
	17	1	-186.3	-149.1	-149.1	-180.9	-180.9	-160.4	-242.2
	17	2	-186.3	-144.4	-144.4	-180.2	-180.2	-157.1	-249.3
	18	0	-195.0	-153.7	-153.7	-188.9	-188.9	-166.2	-257.0
	18	1	-195.0	-166.0	-166.0	-190.8	-190.8	-174.8	-238.7
	18	2	-195.1	-176.8	-176.8	-192.4	-192.4	-182.4	-222.6

MEMBER STRESSES

DECK & CANOPY MEMBERS
ERECTION OF PRECAST MAIN SPAN: S

(-) compression
Point 1: Top right
Point 2: Top left
Point 3: Bottom left
Point 4: Bottom right
Point 5: Top center σ_{t_allow} = 3sqrt(f'c) = 39.8 ksf
Point 6: Bottom center σ_{c_allow} = 0.6(f'c) = -734.4 ksf

			STRESS CANOPY PT						
	Member	Station	(P/A) @ Centroid (kips/ft²)	Normal Stress @ Point 1 (kips/ft²)	Normal Stress @ Point 2 (kips/ft²)	Normal Stress @ Point 3 (kips/ft²)	Normal Stress @ Point 4 (kips/ft²)	Normal Stress @ Point 5 (kips/ft²)	Normal Stress @ Point 6 (kips/ft²)
DECK MEMBERS	19	0	-195.1	-176.8	-176.8	-192.4	-192.4	-182.4	-222.6
	19	1	-195.4	-206.1	-206.1	-197.0	-197.0	-202.8	-179.3
	19	2	-195.6	-207.9	-207.9	-197.4	-197.4	-204.2	-177.3
	20	0	-195.6	-207.9	-207.9	-197.4	-197.4	-204.2	-177.3
	20	1	-195.9	-182.2	-182.2	-193.9	-193.9	-186.4	-216.6
	20	2	-196.2	-129.0	-129.0	-186.4	-186.4	-149.4	-297.2
	21	0	-196.2	-129.0	-129.0	-186.4	-186.4	-149.4	-297.2
	21	1	-196.2	-116.8	-116.8	-184.6	-184.6	-141.0	-315.7
	21	2	-196.3	-103.7	-103.7	-182.8	-182.8	-131.9	-335.4
	22	0	-204.2	-111.6	-111.6	-190.7	-190.7	-139.8	-343.4
	22	1	-204.2	-98.2	-98.2	-188.7	-188.7	-130.4	-363.7
	22	2	-204.2	-84.6	-84.6	-186.8	-186.8	-121.0	-384.0
	23	0	-199.8	-79.0	-79.0	-182.1	-182.1	-115.7	-381.3
	23	1	-199.8	-93.7	-93.7	-184.3	-184.3	-125.9	-359.4
	23	2	-199.9	-107.6	-107.6	-186.4	-186.4	-135.7	-338.6
	24	0	-199.9	-107.6	-107.6	-186.4	-186.4	-135.7	-338.6
	24	1	-200.2	-182.9	-182.9	-197.6	-197.6	-188.1	-226.1
	24	2	-200.2	-226.4	-226.4	-204.0	-204.0	-218.5	-160.7
	25	0	-200.2	-226.4	-226.4	-204.0	-204.0	-218.5	-160.7
	25	1	-199.9	-238.2	-238.2	-205.5	-205.5	-226.5	-142.3
	25	2	-199.6	-218.4	-218.4	-202.3	-202.3	-212.7	-171.3
	26	0	-199.6	-218.4	-218.4	-202.3	-202.3	-212.7	-171.3
	26	1	-199.5	-208.2	-208.2	-200.8	-200.8	-205.6	-186.3
	26	2	-195.8	-134.3	-134.3	-186.8	-186.8	-153.0	-288.4
	27	0	-190.3	-133.4	-133.4	-182.0	-182.0	-150.7	-275.9
	27	1	-190.3	-124.3	-124.3	-180.7	-180.7	-144.4	-289.5
	27	2	-190.3	-115.2	-115.2	-179.3	-179.3	-138.0	-303.2
	28	0	-189.9	-110.9	-110.9	-178.4	-178.4	-134.9	-308.7
	28	1	-189.9	-89.6	-89.6	-175.2	-175.2	-120.1	-340.7
	28	2	0.0	0.0	0.0	0.0	0.0	0.0	0.0
	60	0	0.0	0.0	0.0	0.0	0.0	0.0	0.0
	60	1	-181.9	6.8	6.8	-154.3	-154.3	-50.5	-465.6
	60	2	-181.9	-44.2	-44.2	-161.8	-161.8	-86.0	-389.0

MEMBER STRESSES

DECK & CANOPY MEMBERS
ERECTION OF PRECAST MAIN SPAN: S

(-) compression
Point 1: Top right
Point 2: Top left
Point 3: Bottom left
Point 4: Bottom right
Point 5: Top center σ_{t_allow} = 3sqrt(f'c) = 39.8 ksf
Point 6: Bottom center σ_{c_allow} = 0.6(f'c) = -734.4 ksf

			STRESS CANOPY PT						
	Member	Station	(P/A) @ Centroid (kips/ft²)	Normal Stress @ Point 1 (kips/ft²)	Normal Stress @ Point 2 (kips/ft²)	Normal Stress @ Point 3 (kips/ft²)	Normal Stress @ Point 4 (kips/ft²)	Normal Stress @ Point 5 (kips/ft²)	Normal Stress @ Point 6 (kips/ft²)
CANOPY MEMBERS	101	2	-109.7	-162.3	-162.3	-52.0	-52.0	-150.6	-98.9
	102	0	-109.7	-162.3	-162.3	-52.0	-52.0	-150.6	-98.9
	102	1	-110.7	-222.5	-222.5	12.0	12.0	-197.6	-87.7
	102	2	-112.0	-169.8	-169.8	-48.5	-48.5	-156.9	-100.1
	103	0	-112.0	-169.8	-169.8	-48.5	-48.5	-156.9	-100.1
	103	1	-114.5	-110.7	-110.7	-118.6	-118.6	-111.6	-115.3
	103	2	-114.7	-19.2	-19.2	-219.5	-219.5	-40.5	-134.3
	104	0	-114.7	-19.2	-19.2	-219.5	-219.5	-40.5	-134.3
	105	0	-1.6	-1.8	-1.8	-1.4	-1.4	-1.8	-1.6
	105	1	-1.6	-1.6	-1.6	-1.6	-1.6	-1.6	-1.6
	105	2	-1.6	-1.3	-1.3	-1.9	-1.9	-1.4	-1.7
	106	2	-98.0	27.0	27.0	-235.1	-235.1	-0.9	-123.7
	107	0	-97.9	27.0	27.0	-235.1	-235.1	-0.9	-123.7
	107	1	-98.1	-55.8	-55.8	-144.5	-144.5	-65.2	-106.8
	107	2	-98.2	-106.4	-106.4	-89.2	-89.2	-104.5	-96.5
	108	0	-98.2	-106.4	-106.4	-89.2	-89.2	-104.5	-96.5
	108	1	-98.3	-128.1	-128.1	-65.6	-65.6	-121.5	-92.2
	108	2	-98.4	-124.6	-124.6	-69.7	-69.7	-118.8	-93.0
	109	0	-98.4	-124.6	-124.6	-69.7	-69.7	-118.8	-93.0
	109	1	-98.5	-118.0	-118.0	-77.0	-77.0	-113.7	-94.4
	109	2	-98.5	-107.7	-107.7	-88.4	-88.4	-105.7	-96.6
	110	0	-1.7	-1.9	-1.9	-1.4	-1.4	-1.8	-1.6
	110	1	-1.7	-1.7	-1.7	-1.7	-1.7	-1.7	-1.7
	110	2	-1.7	-1.4	-1.4	-2.0	-2.0	-1.5	-1.7
	111	0	-133.8	-86.6	-86.6	-185.6	-185.6	-97.1	-143.5
	111	1	-133.8	-97.7	-97.7	-173.4	-173.4	-105.8	-141.3
	111	2	-133.8	-107.9	-107.9	-162.3	-162.3	-113.7	-139.2
	112	0	-133.8	-107.9	-107.9	-162.3	-162.3	-113.7	-139.2
	112	1	-134.0	-155.7	-155.7	-110.1	-110.1	-150.9	-129.5
	112	2	-134.1	-169.4	-169.4	-95.3	-95.3	-161.5	-126.8
	113	0	-134.1	-169.4	-169.4	-95.3	-95.3	-161.5	-126.8
	113	1	-134.2	-153.6	-153.6	-112.9	-112.9	-149.3	-130.2
	113	2	-134.3	-110.5	-110.5	-160.5	-160.5	-115.8	-139.2
	114	0	-134.33	-110.49	-110.49	-160.50	-160.50	-115.81	-139.24

MEMBER STRESSES

DECK & CANOPY MEMBERS
ERECTION OF PRECAST MAIN SPAN: S

(-) compression
Point 1: Top right
Point 2: Top left
Point 3: Bottom left
Point 4: Bottom right
Point 5: Top center σ_{t_allow} = 3sqrt(f'c) = 39.8 ksf
Point 6: Bottom center σ_{c_allow} = 0.6(f'c) = -734.4 ksf

			STRESS CANOPY PT						
	Member	Station	(P/A) @ Centroid (kips/ft²)	Normal Stress @ Point 1 (kips/ft²)	Normal Stress @ Point 2 (kips/ft²)	Normal Stress @ Point 3 (kips/ft²)	Normal Stress @ Point 4 (kips/ft²)	Normal Stress @ Point 5 (kips/ft²)	Normal Stress @ Point 6 (kips/ft²)
CANOPY MEMBERS	114	1	-134.37	-93.19	-93.19	-179.59	-179.59	-102.36	-142.85
	114	2	-134.40	-73.08	-73.08	-201.73	-201.73	-86.74	-147.03
	115	0	-1.83	-1.98	-1.98	-1.68	-1.68	-1.95	-1.81
	115	1	-1.84	-1.85	-1.85	-1.82	-1.82	-1.85	-1.84
	115	2	-1.84	-1.66	-1.66	-2.04	-2.04	-1.70	-1.88
	116	0	-134.38	-111.43	-111.43	-159.58	-159.58	-116.55	-139.11
	116	1	-134.41	-118.89	-118.89	-151.44	-151.44	-122.35	-137.60
	116	2	-134.42	-125.61	-125.61	-144.09	-144.09	-127.58	-136.23
	117	0	-134.42	-125.61	-125.61	-144.09	-144.09	-127.57	-136.23
	117	1	-134.55	-157.68	-157.68	-109.15	-109.15	-152.53	-129.79
	117	2	-134.68	-154.99	-154.99	-112.37	-112.37	-150.46	-130.49
	118	0	-134.67	-154.99	-154.99	-112.37	-112.37	-150.46	-130.49
	118	1	-134.80	-121.22	-121.22	-149.71	-149.71	-124.25	-137.59
	118	2	-134.92	-57.75	-57.75	-219.66	-219.66	-74.95	-150.81
	119	0	-134.93	-57.75	-57.75	-219.66	-219.66	-74.95	-150.81
	119	1	-134.95	-40.95	-40.95	-238.15	-238.15	-61.90	-154.30
	119	2	-134.98	-22.51	-22.51	-258.45	-258.45	-47.58	-158.13
	120	0	-1.30	-1.24	-1.24	-1.37	-1.37	-1.25	-1.32
	120	1	-1.31	-1.32	-1.32	-1.29	-1.29	-1.32	-1.31
	120	2	-1.31	-1.33	-1.33	-1.30	-1.30	-1.32	-1.31
	121	0	-88.95	-25.94	-25.94	-158.13	-158.13	-39.99	-101.92
	121	1	-88.98	-36.59	-36.59	-146.50	-146.50	-48.26	-99.76
	121	2	-88.99	-46.41	-46.41	-135.74	-135.74	-55.90	-97.76
	122	0	-88.99	-46.41	-46.41	-135.74	-135.74	-55.90	-97.76
	122	1	-89.12	-90.85	-90.85	-87.22	-87.22	-90.47	-88.77
	122	2	-89.18	-99.86	-99.86	-77.45	-77.45	-97.48	-86.98
	123	0	-89.18	-99.86	-99.86	-77.45	-77.45	-97.48	-86.98
	123	1	-89.03	-75.99	-75.99	-103.35	-103.35	-78.89	-91.71
	123	2	-88.88	-19.06	-19.06	-165.53	-165.53	-34.62	-103.25
	124	0	-88.88	-19.06	-19.06	-165.54	-165.54	-34.62	-103.25
	124	1	-88.87	-9.63	-9.63	-175.87	-175.87	-27.29	-105.18
	124	2	-88.84	0.43	0.43	-186.86	-186.86	-19.46	-107.22
	125	0	-1.16	-1.13	-1.13	-1.19	-1.19	-1.14	-1.17
	125	1	-1.15	-1.17	-1.17	-1.14	-1.14	-1.16	-1.15

MEMBER STRESSES

DECK & CANOPY MEMBERS
ERECTION OF PRECAST MAIN SPAN: S

(-) compression
Point 1: Top right
Point 2: Top left
Point 3: Bottom left
Point 4: Bottom right
Point 5: Top center σ_{t_allow} = 3sqrt(f'c) = 39.8 ksf
Point 6: Bottom center σ_{c_allow} = 0.6(f'c) = -734.4 ksf

	Member	Station	STRESS CANOPY PT (P/A) @ Centroid (kips/ft²)	Normal Stress @ Point 1 (kips/ft²)	Normal Stress @ Point 2 (kips/ft²)	Normal Stress @ Point 3 (kips/ft²)	Normal Stress @ Point 4 (kips/ft²)	Normal Stress @ Point 5 (kips/ft²)	Normal Stress @ Point 6 (kips/ft²)
CANOPY MEMBERS	125	2	-1.15	-1.11	-1.11	-1.18	-1.18	-1.12	-1.15
	126	0	-117.04	-5.00	-5.00	-240.05	-240.05	-29.97	-140.10
	126	1	-117.01	-27.56	-27.56	-215.22	-215.22	-47.49	-135.43
	126	2	-116.97	-47.84	-47.84	-192.86	-192.86	-63.25	-131.20
	127	0	-116.97	-47.84	-47.84	-192.87	-192.87	-63.25	-131.20
	127	1	-116.84	-101.99	-101.99	-133.14	-133.14	-105.30	-119.89
	127	2	-116.71	-129.41	-129.41	-102.76	-102.76	-126.58	-114.09
	128	0	-116.71	-129.41	-129.41	-102.76	-102.76	-126.58	-114.09
	128	1	-116.57	-131.36	-131.36	-100.34	-100.34	-128.06	-113.53
	128	2	-115.34	-112.86	-112.86	-118.05	-118.05	-113.41	-115.85
	129	0	-115.34	-112.86	-112.86	-118.05	-118.05	-113.41	-115.85
	129	1	-114.11	-123.26	-123.26	-104.06	-104.06	-121.22	-112.22
	129	2	-113.10	-140.64	-140.64	-82.86	-82.86	-134.50	-107.43
	130	0	-113.19	-140.73	-140.73	-82.96	-82.96	-134.60	-107.53
	130	1	-112.75	-170.02	-170.02	-49.87	-49.87	-157.25	-100.96
	130	2	-112.71	-200.54	-200.54	-16.27	-16.27	-180.97	-94.62
	131	0	-113.60	-124.25	-124.25	-101.91	-101.91	-121.88	-111.41
	131	1	-113.59	-162.92	-162.92	-59.43	-59.43	-151.92	-103.43
	131	2	0.00	0.00	0.00	0.00	0.00	0.00	0.00

FIGG	Project FIU	Date 10-27-16	Page 1 Of
	Project Number 2262.03	Designed EDL	
	Description STRESS CHECK DURING CONSTRUCTION	Checked	

DECK - BACKSPAN

- AXIAL STRESS AT PYLON AFTER STRESSING DECK & CANOPY P.T. IN BACKSPAN BEFORE CLOSURE:

$\frac{P}{A} = 100\ Ksf$ (COMPRESSION)

$A_{DECK} = 45.67\ ft^2$

$P = 100 \frac{k}{ft^2} \times 45.67\ ft^2 = \underline{4567\ K}$

- BEFORE MAKING CLOSURE, THE ONLY CONTACT AREA IS THE WIDTH OF PYLON. CHECK IF THIS AREA WOULD BE UNDER ALLOWABLE COMPRESSION STRESS TAKING AXIAL LOAD CALCULATED ABOVE:

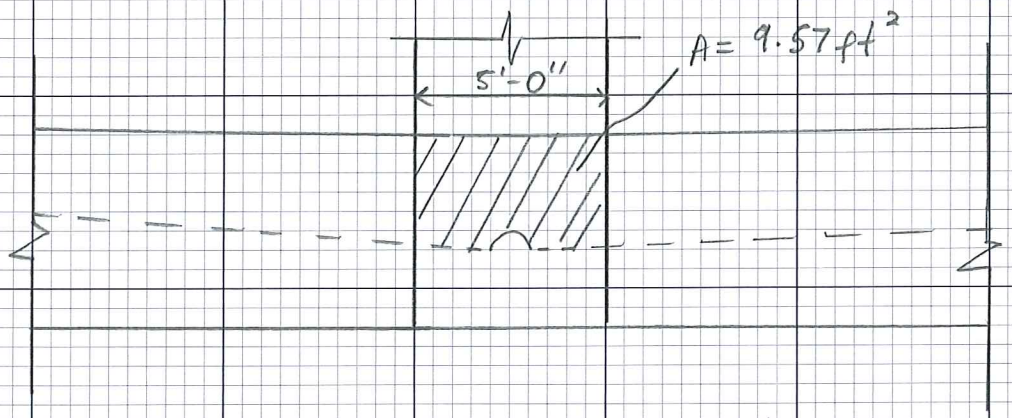

$\sigma = \frac{P}{A} = \frac{4567\ K}{9.57\ ft^2} = 477.2\ Ksf \sim 0.4 f'_c \therefore OK$

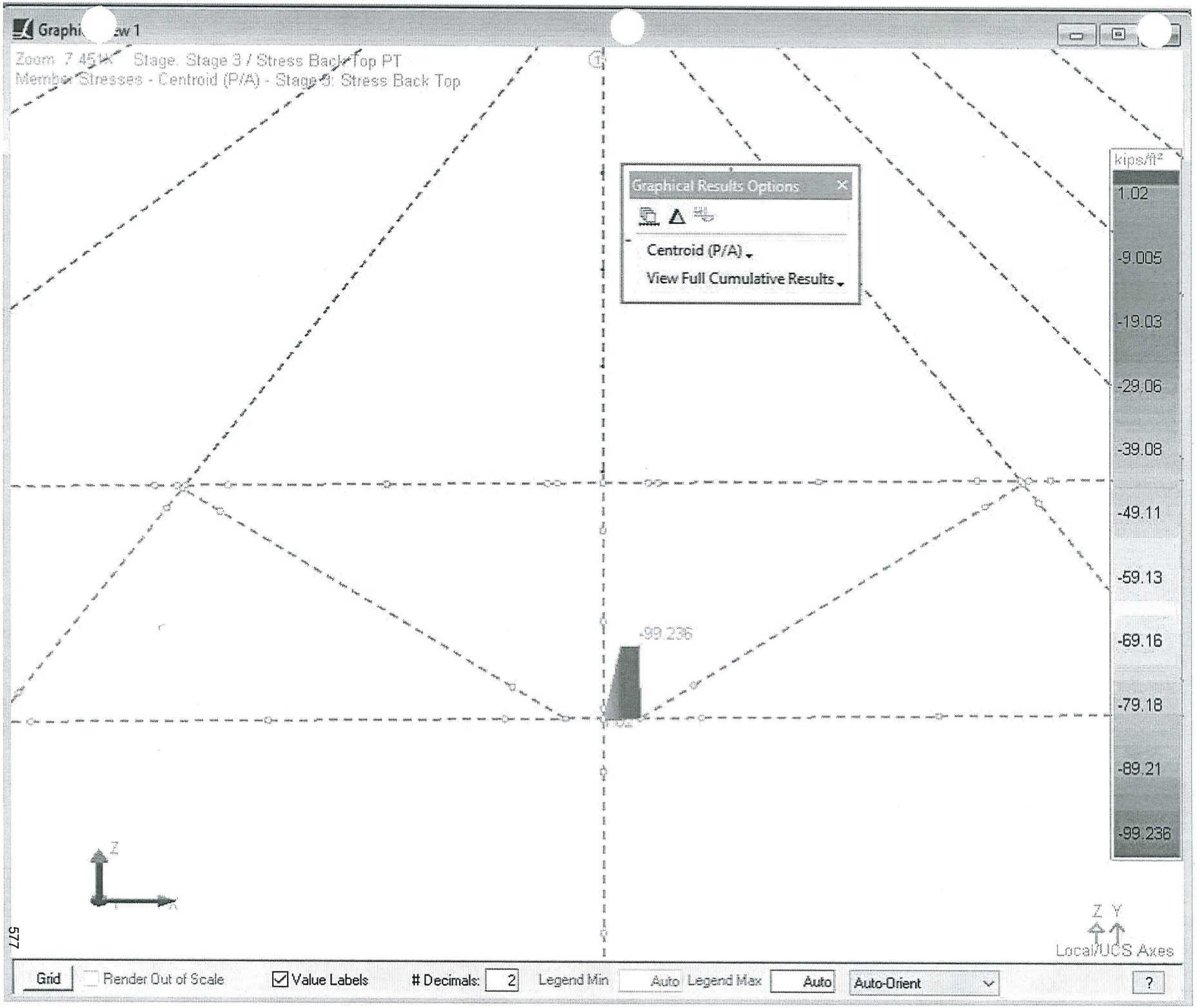
Graphi ew 1
Zoom: 7.451x Stage: Stage 3 / Stress Back Top PT
Member Stresses - Centroid (P/A) - Stage 3: Stress Back Top
Graphical Results Options
Centroid (P/A)
View Full Cumulative Results
kips/ft²
1.02
-9.005
-19.03
-29.06
-39.08
-49.11
-59.13
-69.16
-79.18
-89.21
-99.236
-99.236
Z
X
Z Y
Local/UCS Axes
577
Grid
Render Out of Scale
Value Labels
Decimals: 2
Legend Min Auto
Legend Max Auto
Auto-Orient
?

V. LONGITUDINAL DESIGN

- DECK & CANOPY STRESSES
- CANOPY BUCKLING CHECK
- TRUSS DESIGN
- DIAGONALS BUCKLING CHECK
- ULTIMATE MOMENT CALCULATIONS

MEMBER STRESSES

DECK & CANOPY MEMBERS
EOC

(-) compression

			SELWEIGHT (DC)						
Member	Station	Result Case	(P/A) @ Centroid (kips/ft²)	Normal Stress @ Point 1 (kips/ft²)	Normal Stress @ Point 2 (kips/ft²)	Normal Stress @ Point 3 (kips/ft²)	Normal Stress @ Point 4 (kips/ft²)	Normal Stress @ Point 5 (kips/ft²)	Normal Stress @ Point 6 (kips/ft²)
1	0	EOC: EOC: Other PT Losses	-0.07	-1.80	-1.80	-0.33	-0.33	-1.27	2.52
1	1	EOC: EOC: Other PT Losses	-0.07	-1.11	-1.11	-0.23	-0.23	-0.80	1.49
1	2	EOC: EOC: Other PT Losses	-0.07	-0.42	-0.42	-0.12	-0.12	-0.31	0.44
2	0	EOC: EOC: Other PT Losses	-0.79	5.52	5.52	0.13	0.13	3.61	-10.28
2	1	EOC: EOC: Other PT Losses	-0.79	-21.37	-21.37	-3.80	-3.80	-15.11	30.15
2	2	EOC: EOC: Other PT Losses	-0.79	-48.16	-48.16	-7.72	-7.72	-33.76	70.43
3	0	EOC: EOC: Other PT Losses	35.39	7.53	7.53	31.32	31.32	16.00	77.27
3	1	EOC: EOC: Other PT Losses	35.40	-6.73	-6.73	29.24	29.23	6.07	98.73
3	2	EOC: EOC: Other PT Losses	35.40	-17.24	-17.23	27.70	27.70	-1.24	114.53
4	0	EOC: EOC: Other PT Losses	35.40	-17.24	-17.23	27.70	27.70	-1.24	114.53
4	1	EOC: EOC: Other PT Losses	35.41	-27.08	-27.07	26.27	26.27	-8.08	129.34
4	2	EOC: EOC: Other PT Losses	35.42	-19.67	-19.66	27.37	27.36	-2.92	118.22
5	0	EOC: EOC: Other PT Losses	35.42	-19.67	-19.66	27.37	27.36	-2.92	118.22
5	1	EOC: EOC: Other PT Losses	35.43	4.96	4.98	30.98	30.97	14.23	81.21
5	2	EOC: EOC: Other PT Losses	35.43	46.81	46.83	37.11	37.09	43.36	18.32
6	0	EOC: EOC: Other PT Losses	35.43	46.81	46.83	37.11	37.09	43.36	18.32
6	1	EOC: EOC: Other PT Losses	35.44	53.71	53.73	38.12	38.10	48.16	7.95
6	2	EOC: EOC: Other PT Losses	35.44	60.92	60.94	39.17	39.16	53.18	-2.89
7	0	EOC: EOC: Other PT Losses	31.95	76.81	76.82	38.52	38.51	63.18	-35.48
7	1	EOC: EOC: Other PT Losses	31.96	65.59	65.61	36.88	36.87	55.37	-18.62
7	2	EOC: EOC: Other PT Losses	31.96	54.44	54.45	35.25	35.24	47.61	-1.85
8	0	EOC: EOC: Other PT Losses	46.10	69.24	69.26	49.49	49.47	62.21	11.29
8	1	EOC: EOC: Other PT Losses	46.10	50.17	50.19	46.71	46.69	48.94	39.98
8	2	EOC: EOC: Other PT Losses	46.10	34.20	34.22	44.38	44.35	37.82	63.99
9	0	EOC: EOC: Other PT Losses	46.10	34.20	34.22	44.38	44.35	37.82	63.99
9	1	EOC: EOC: Other PT Losses	46.11	7.79	7.82	40.52	40.50	19.45	103.71
9	2	EOC: EOC: Other PT Losses	46.12	0.84	0.87	39.52	39.49	14.61	114.18
10	0	EOC: EOC: Other PT Losses	46.12	0.84	0.87	39.52	39.49	14.61	114.18
10	1	EOC: EOC: Other PT Losses	46.13	13.37	13.40	41.36	41.33	23.34	95.36
10	2	EOC: EOC: Other PT Losses	46.14	45.38	45.42	46.05	46.01	45.63	47.25
11	0	EOC: EOC: Other PT Losses	46.14	45.38	45.42	46.05	46.01	45.63	47.25
11	1	EOC: EOC: Other PT Losses	46.14	51.18	51.22	46.90	46.86	49.67	38.54
11	2	EOC: EOC: Other PT Losses	46.14	57.33	57.38	47.80	47.76	53.95	29.29
12	0	EOC: EOC: Other PT Losses	46.36	66.22	66.26	49.29	49.25	60.20	16.49
12	1	EOC: EOC: Other PT Losses	46.37	62.90	62.95	48.81	48.77	57.89	21.47
12	2	EOC: EOC: Other PT Losses	46.37	59.65	59.69	48.33	48.29	55.63	26.36
13	0	EOC: EOC: Other PT Losses	47.06	61.12	61.16	49.14	49.09	56.86	25.88
13	1	EOC: EOC: Other PT Losses	47.06	45.62	45.66	46.87	46.83	46.07	49.19
13	2	EOC: EOC: Other PT Losses	47.06	32.47	32.51	44.95	44.91	36.92	68.97
14	0	EOC: EOC: Other PT Losses	47.06	32.47	32.51	44.95	44.91	36.92	68.97
14	1	EOC: EOC: Other PT Losses	47.07	6.38	6.43	41.15	41.10	18.77	108.21
14	2	EOC: EOC: Other PT Losses	47.08	3.62	3.68	40.76	40.70	16.85	112.38
15	0	EOC: EOC: Other PT Losses	47.08	3.62	3.68	40.76	40.70	16.85	112.38
15	1	EOC: EOC: Other PT Losses	47.09	24.14	24.21	43.77	43.71	31.14	81.54
15	2	EOC: EOC: Other PT Losses	47.10	67.96	68.03	50.19	50.12	61.64	15.70
16	0	EOC: EOC: Other PT Losses	47.10	67.96	68.03	50.19	50.12	61.64	15.70
16	1	EOC: EOC: Other PT Losses	47.10	74.58	74.65	51.16	51.09	66.25	5.75
16	2	EOC: EOC: Other PT Losses	47.10	81.51	81.58	52.18	52.11	71.08	-4.67

MEMBER STRESSES

DECK & CANOPY MEMBERS
EOC

(-) compression

			SELWEIGHT (DC)						
Member	Station	Result Case	(P/A) @ Centroid (kips/ft²)	Normal Stress @ Point 1 (kips/ft²)	Normal Stress @ Point 2 (kips/ft²)	Normal Stress @ Point 3 (kips/ft²)	Normal Stress @ Point 4 (kips/ft²)	Normal Stress @ Point 5 (kips/ft²)	Normal Stress @ Point 6 (kips/ft²)
17	0	EOC: EOC: Other PT Losses	46.34	75.75	75.82	50.68	50.61	66.84	2.06
17	1	EOC: EOC: Other PT Losses	46.34	80.78	80.84	51.41	51.34	70.33	-5.48
17	2	EOC: EOC: Other PT Losses	46.34	85.85	85.92	52.16	52.09	73.87	-13.12
18	0	EOC: EOC: Other PT Losses	36.46	76.88	76.95	42.41	42.34	64.62	-24.37
18	1	EOC: EOC: Other PT Losses	36.46	61.05	61.12	40.10	40.03	53.60	-0.57
18	2	EOC: EOC: Other PT Losses	36.46	46.73	46.80	38.00	37.93	43.63	20.97
19	0	EOC: EOC: Other PT Losses	36.46	46.73	46.80	38.00	37.93	43.63	20.97
19	1	EOC: EOC: Other PT Losses	36.47	2.55	2.63	31.56	31.48	12.89	87.40
19	2	EOC: EOC: Other PT Losses	36.48	-14.15	-14.06	29.13	29.04	1.27	112.53
20	0	EOC: EOC: Other PT Losses	36.48	-14.15	-14.06	29.13	29.04	1.27	112.53
20	1	EOC: EOC: Other PT Losses	36.49	-3.38	-3.29	30.71	30.62	8.77	96.37
20	2	EOC: EOC: Other PT Losses	36.51	34.86	34.96	36.32	36.22	35.39	38.90
21	0	EOC: EOC: Other PT Losses	36.51	34.86	34.96	36.32	36.22	35.39	38.90
21	1	EOC: EOC: Other PT Losses	36.51	44.45	44.54	37.72	37.63	42.07	24.50
21	2	EOC: EOC: Other PT Losses	36.51	54.89	54.99	39.25	39.16	49.34	8.81
22	0	EOC: EOC: Other PT Losses	27.71	37.47	37.57	29.19	29.10	34.54	12.96
22	1	EOC: EOC: Other PT Losses	27.71	51.10	51.20	31.19	31.09	44.03	-7.52
22	2	EOC: EOC: Other PT Losses	27.71	64.79	64.89	33.19	33.09	53.55	-28.10
23	0	EOC: EOC: Other PT Losses	15.97	43.75	43.85	20.09	19.99	35.34	-25.87
23	1	EOC: EOC: Other PT Losses	15.97	35.37	35.47	18.86	18.77	29.51	-13.28
23	2	EOC: EOC: Other PT Losses	15.97	27.70	27.80	17.74	17.64	24.17	-1.74
24	0	EOC: EOC: Other PT Losses	15.97	27.70	27.80	17.74	17.64	24.17	-1.74
24	1	EOC: EOC: Other PT Losses	15.98	-5.59	-5.48	12.89	12.78	1.00	48.34
24	2	EOC: EOC: Other PT Losses	16.00	-7.41	-7.30	12.64	12.52	-0.26	51.09
25	0	EOC: EOC: Other PT Losses	16.00	-7.41	-7.30	12.64	12.52	-0.26	51.09
25	1	EOC: EOC: Other PT Losses	16.01	22.27	22.39	16.99	16.87	20.41	6.50
25	2	EOC: EOC: Other PT Losses	16.02	83.47	83.59	25.96	25.83	63.01	-85.47
26	0	EOC: EOC: Other PT Losses	16.02	83.47	83.59	25.96	25.83	63.01	-85.47
26	1	EOC: EOC: Other PT Losses	16.02	104.23	104.36	29.00	28.87	77.47	-116.68
26	2	EOC: EOC: Other PT Losses	16.02	127.07	127.20	32.34	32.21	93.36	-151.01
29	0	EOC: EOC: Other PT Losses	8.53	81.80	82.52	19.66	18.93	59.78	-102.18
29	1	EOC: EOC: Other PT Losses	8.53	60.69	61.40	16.57	15.86	45.09	-70.43
29	2	EOC: EOC: Other PT Losses	8.53	41.69	42.39	13.78	13.09	31.86	-41.85
30	0	EOC: EOC: Other PT Losses	8.53	41.69	42.39	13.78	13.09	31.86	-41.85
30	1	EOC: EOC: Other PT Losses	8.55	-12.04	-11.41	5.90	5.26	-5.56	39.01
30	2	EOC: EOC: Other PT Losses	8.56	-34.27	-33.69	2.62	2.05	-21.05	72.49
31	0	EOC: EOC: Other PT Losses	8.56	-34.27	-33.69	2.62	2.05	-21.05	72.49
31	1	EOC: EOC: Other PT Losses	8.57	-24.98	-24.46	3.96	3.44	-14.60	58.60
31	2	EOC: EOC: Other PT Losses	8.58	15.83	16.28	9.90	9.45	13.78	-2.66
32	0	EOC: EOC: Other PT Losses	8.58	15.83	16.28	9.90	9.45	13.78	-2.66
32	1	EOC: EOC: Other PT Losses	8.58	24.46	24.91	11.16	10.71	19.79	-15.64
32	2	EOC: EOC: Other PT Losses	8.58	33.78	34.22	12.52	12.08	26.27	-29.63
33	0	EOC: EOC: Other PT Losses	13.28	38.28	38.71	17.19	16.75	30.83	-24.63
33	1	EOC: EOC: Other PT Losses	13.28	36.52	36.96	16.93	16.49	29.61	-22.00
33	2	EOC: EOC: Other PT Losses	13.28	34.78	35.22	16.67	16.24	28.40	-19.38
34	0	EOC: EOC: Other PT Losses	13.34	36.73	37.17	17.01	16.58	29.77	-22.16
34	1	EOC: EOC: Other PT Losses	13.34	31.90	32.33	16.30	15.87	26.41	-14.89
34	2	EOC: EOC: Other PT Losses	13.34	27.42	27.84	15.64	15.22	23.29	-8.14

MEMBER STRESSES

DECK & CANOPY MEMBERS
EOC

(-) compression

			SELWEIGHT (DC)						
Member	Station	Result Case	(P/A) @ Centroid (kips/ft²)	Normal Stress @ Point 1 (kips/ft²)	Normal Stress @ Point 2 (kips/ft²)	Normal Stress @ Point 3 (kips/ft²)	Normal Stress @ Point 4 (kips/ft²)	Normal Stress @ Point 5 (kips/ft²)	Normal Stress @ Point 6 (kips/ft²)
35	0	EOC: EOC: Other PT Losses	13.34	27.42	27.84	15.64	15.22	23.29	-8.14
35	1	EOC: EOC: Other PT Losses	13.35	15.77	16.17	13.93	13.53	15.17	9.40
35	2	EOC: EOC: Other PT Losses	13.35	7.45	7.84	12.71	12.32	9.38	21.92
36	0	EOC: EOC: Other PT Losses	13.35	7.45	7.84	12.71	12.32	9.38	21.92
36	1	EOC: EOC: Other PT Losses	13.36	2.46	2.83	11.97	11.61	5.90	29.45
36	2	EOC: EOC: Other PT Losses	13.36	0.82	1.17	11.72	11.38	4.75	31.94
37	0	EOC: EOC: Other PT Losses	13.36	0.82	1.17	11.72	11.38	4.75	31.94
37	1	EOC: EOC: Other PT Losses	13.36	1.28	1.62	11.79	11.45	5.07	31.26
37	2	EOC: EOC: Other PT Losses	13.36	2.64	2.97	11.98	11.66	6.01	29.23
38	0	EOC: EOC: Other PT Losses	14.34	5.34	5.66	13.21	12.88	8.19	27.62
38	1	EOC: EOC: Other PT Losses	14.34	5.11	5.44	13.18	12.85	8.03	27.96
38	2	EOC: EOC: Other PT Losses	14.34	4.90	5.22	13.15	12.82	7.88	28.29
39	0	EOC: EOC: Other PT Losses	14.45	4.96	5.29	13.25	12.93	7.96	28.47
39	1	EOC: EOC: Other PT Losses	14.45	2.46	2.78	12.88	12.56	6.22	32.24
39	2	EOC: EOC: Other PT Losses	14.45	0.27	0.58	12.56	12.25	4.69	35.54
40	0	EOC: EOC: Other PT Losses	14.45	0.27	0.58	12.56	12.25	4.69	35.54
40	1	EOC: EOC: Other PT Losses	14.46	-4.41	-4.11	11.87	11.57	1.43	42.59
40	2	EOC: EOC: Other PT Losses	14.46	-6.33	-6.05	11.58	11.30	0.09	45.50
41	0	EOC: EOC: Other PT Losses	14.46	-6.33	-6.05	11.58	11.30	0.09	45.50
41	1	EOC: EOC: Other PT Losses	14.46	-5.48	-5.22	11.70	11.44	0.67	44.25
41	2	EOC: EOC: Other PT Losses	14.47	-1.86	-1.62	12.22	11.98	3.19	38.83
42	0	EOC: EOC: Other PT Losses	14.47	-1.86	-1.62	12.22	11.98	3.19	38.83
42	1	EOC: EOC: Other PT Losses	14.47	1.77	2.00	12.75	12.51	5.71	33.39
42	2	EOC: EOC: Other PT Losses	14.47	6.46	6.68	13.43	13.21	8.97	26.34
43	0	EOC: EOC: Other PT Losses	12.60	3.15	3.37	11.34	11.12	6.10	26.63
43	1	EOC: EOC: Other PT Losses	12.60	4.63	4.84	11.56	11.34	7.12	24.41
43	2	EOC: EOC: Other PT Losses	12.60	6.11	6.33	11.77	11.55	8.16	22.17
44	0	EOC: EOC: Other PT Losses	13.60	0.35	0.57	11.79	11.57	4.45	33.36
44	1	EOC: EOC: Other PT Losses	13.61	-2.17	-1.96	11.42	11.21	2.70	37.16
44	2	EOC: EOC: Other PT Losses	13.61	-4.39	-4.18	11.09	10.89	1.15	40.50
45	0	EOC: EOC: Other PT Losses	13.61	-4.39	-4.18	11.09	10.89	1.15	40.50
45	1	EOC: EOC: Other PT Losses	13.61	-8.99	-8.80	10.41	10.22	-2.05	47.44
45	2	EOC: EOC: Other PT Losses	13.61	-11.20	-11.02	10.08	9.91	-3.59	50.77
46	0	EOC: EOC: Other PT Losses	13.61	-11.20	-11.02	10.08	9.91	-3.59	50.77
46	1	EOC: EOC: Other PT Losses	13.62	-11.01	-10.86	10.10	9.95	-3.47	50.52
46	2	EOC: EOC: Other PT Losses	13.62	-8.45	-8.31	10.47	10.33	-1.69	46.69
47	0	EOC: EOC: Other PT Losses	13.62	-8.45	-8.31	10.47	10.33	-1.69	46.69
47	1	EOC: EOC: Other PT Losses	13.62	-5.17	-5.04	10.95	10.82	0.59	41.77
47	2	EOC: EOC: Other PT Losses	13.62	-0.68	-0.57	11.60	11.48	3.70	35.04
48	0	EOC: EOC: Other PT Losses	8.17	-10.92	-10.80	5.44	5.33	-5.08	36.77
48	1	EOC: EOC: Other PT Losses	8.17	-8.04	-7.92	5.87	5.75	-3.07	32.45
48	2	EOC: EOC: Other PT Losses	8.17	-5.15	-5.03	6.29	6.17	-1.06	28.10
49	0	EOC: EOC: Other PT Losses	9.95	-16.44	-16.32	6.16	6.04	-8.38	49.53
49	1	EOC: EOC: Other PT Losses	9.95	-15.51	-15.40	6.29	6.18	-7.73	48.14
49	2	EOC: EOC: Other PT Losses	9.95	-14.27	-14.16	6.47	6.37	-6.87	46.29
50	0	EOC: EOC: Other PT Losses	9.95	-14.27	-14.16	6.47	6.37	-6.87	46.29
50	1	EOC: EOC: Other PT Losses	9.96	-9.53	-9.45	7.16	7.07	-3.58	39.19
50	2	EOC: EOC: Other PT Losses	9.96	-2.68	-2.60	8.15	8.08	1.19	28.90

MEMBER STRESSES

DECK & CANOPY MEMBERS
EOC

(-) compression

			SELWEIGHT (DC)						
Member	Station	Result Case	(P/A) @ Centroid (kips/ft²)	Normal Stress @ Point 1 (kips/ft²)	Normal Stress @ Point 2 (kips/ft²)	Normal Stress @ Point 3 (kips/ft²)	Normal Stress @ Point 4 (kips/ft²)	Normal Stress @ Point 5 (kips/ft²)	Normal Stress @ Point 6 (kips/ft²)
51	0	EOC: EOC: Other PT Losses	9.96	-2.68	-2.60	8.15	8.08	1.19	28.90
51	1	EOC: EOC: Other PT Losses	9.96	6.30	6.36	9.46	9.40	7.44	15.42
51	2	EOC: EOC: Other PT Losses	9.97	17.41	17.45	11.08	11.04	15.16	-1.25
52	0	EOC: EOC: Other PT Losses	9.97	17.41	17.45	11.08	11.04	15.16	-1.25
52	1	EOC: EOC: Other PT Losses	9.97	27.73	27.76	12.58	12.55	22.34	-16.76
52	2	EOC: EOC: Other PT Losses	9.97	39.39	39.41	14.28	14.27	30.45	-34.27
60	0	EOC: EOC: Other PT Losses	0.00	0.00	0.00	0.00	0.00	0.00	0.00
60	1	EOC: EOC: Other PT Losses	0.00	0.15	0.15	0.02	0.02	0.10	-0.22
60	2	EOC: EOC: Other PT Losses	0.00	0.58	0.58	0.09	0.09	0.40	-0.86
101	0	EOC: EOC: Other PT Losses	0.23	-11.44	-11.44	13.04	13.04	-8.84	2.63
101	1	EOC: EOC: Other PT Losses	0.23	-28.41	-28.40	31.67	31.66	-22.02	6.12
101	2	EOC: EOC: Other PT Losses	0.23	-43.91	-43.90	48.69	48.69	-34.07	9.32
102	0	EOC: EOC: Other PT Losses	0.23	-43.91	-43.90	48.69	48.69	-34.07	9.32
102	1	EOC: EOC: Other PT Losses	0.24	-106.21	-106.20	117.12	117.10	-82.48	22.15
102	2	EOC: EOC: Other PT Losses	0.25	-116.38	-116.36	128.30	128.28	-90.38	24.26
103	0	EOC: EOC: Other PT Losses	0.25	-116.38	-116.36	128.30	128.28	-90.38	24.26
103	1	EOC: EOC: Other PT Losses	0.26	-75.29	-75.26	83.22	83.19	-58.44	15.82
103	2	EOC: EOC: Other PT Losses	0.28	16.60	16.64	-17.65	-17.68	12.97	-3.09
104	0	EOC: EOC: Other PT Losses	0.27	16.60	16.63	-17.65	-17.68	12.97	-3.09
104	1	EOC: EOC: Other PT Losses	0.28	50.99	51.03	-55.41	-55.45	39.71	-10.17
104	2	EOC: EOC: Other PT Losses	0.28	89.91	89.95	-98.12	-98.16	69.95	-18.17
106	0	EOC: EOC: Other PT Losses	-90.14	57.34	57.38	-252.06	-252.10	24.49	-120.50
106	1	EOC: EOC: Other PT Losses	-90.14	38.08	38.12	-230.91	-230.95	9.53	-116.53
106	2	EOC: EOC: Other PT Losses	-90.13	19.92	19.96	-210.96	-211.00	-4.59	-112.79
107	0	EOC: EOC: Other PT Losses	-90.13	19.92	19.96	-210.96	-211.00	-4.59	-112.79
107	1	EOC: EOC: Other PT Losses	-90.12	-64.75	-64.71	-117.98	-118.02	-70.39	-95.35
107	2	EOC: EOC: Other PT Losses	-90.11	-117.22	-117.18	-60.35	-60.39	-111.16	-84.54
108	0	EOC: EOC: Other PT Losses	-90.11	-117.22	-117.18	-60.35	-60.39	-111.16	-84.54
108	1	EOC: EOC: Other PT Losses	-90.10	-140.91	-140.86	-34.33	-34.37	-129.57	-79.65
108	2	EOC: EOC: Other PT Losses	-90.10	-139.35	-139.31	-36.02	-36.06	-128.36	-79.96
109	0	EOC: EOC: Other PT Losses	-90.10	-139.35	-139.31	-36.02	-36.07	-128.36	-79.96
109	1	EOC: EOC: Other PT Losses	-90.09	-133.41	-133.36	-42.55	-42.59	-123.74	-81.18
109	2	EOC: EOC: Other PT Losses	-90.09	-123.74	-123.69	-53.16	-53.20	-116.22	-83.17
111	0	EOC: EOC: Other PT Losses	-130.00	-132.08	-132.03	-127.71	-127.76	-131.60	-129.57
111	1	EOC: EOC: Other PT Losses	-129.99	-141.52	-141.47	-117.35	-117.39	-138.93	-127.63
111	2	EOC: EOC: Other PT Losses	-129.99	-150.03	-149.98	-108.00	-108.04	-145.54	-125.87
112	0	EOC: EOC: Other PT Losses	-129.99	-150.03	-149.98	-107.99	-108.04	-145.54	-125.87
112	1	EOC: EOC: Other PT Losses	-129.98	-187.17	-187.12	-67.20	-67.24	-174.40	-118.21
112	2	EOC: EOC: Other PT Losses	-129.97	-190.27	-190.22	-63.77	-63.82	-176.81	-117.56
113	0	EOC: EOC: Other PT Losses	-129.97	-190.27	-190.22	-63.77	-63.82	-176.81	-117.56
113	1	EOC: EOC: Other PT Losses	-129.96	-164.18	-164.13	-92.40	-92.45	-156.54	-122.92
113	2	EOC: EOC: Other PT Losses	-129.95	-110.82	-110.76	-150.97	-151.02	-115.06	-133.90
114	0	EOC: EOC: Other PT Losses	-129.96	-110.82	-110.76	-150.97	-151.02	-115.06	-133.90
114	1	EOC: EOC: Other PT Losses	-129.95	-90.53	-90.47	-173.25	-173.29	-99.29	-138.07
114	2	EOC: EOC: Other PT Losses	-129.95	-67.43	-67.38	-198.59	-198.64	-81.34	-142.82
116	0	EOC: EOC: Other PT Losses	-130.17	-132.45	-132.40	-127.66	-127.71	-131.92	-129.70
116	1	EOC: EOC: Other PT Losses	-130.17	-139.69	-139.63	-119.72	-119.77	-137.54	-128.21
116	2	EOC: EOC: Other PT Losses	-130.16	-146.19	-146.13	-112.58	-112.63	-142.59	-126.87

MEMBER STRESSES

DECK & CANOPY MEMBERS
EOC

(-) compression

			SELWEIGHT (DC)						
Member	Station	Result Case	(P/A) @ Centroid (kips/ft²)	Normal Stress @ Point 1 (kips/ft²)	Normal Stress @ Point 2 (kips/ft²)	Normal Stress @ Point 3 (kips/ft²)	Normal Stress @ Point 4 (kips/ft²)	Normal Stress @ Point 5 (kips/ft²)	Normal Stress @ Point 6 (kips/ft²)
117	0	EOC: EOC: Other PT Losses	-130.16	-146.19	-146.13	-112.58	-112.63	-142.59	-126.87
117	1	EOC: EOC: Other PT Losses	-130.15	-176.47	-176.41	-79.31	-79.36	-166.13	-120.62
117	2	EOC: EOC: Other PT Losses	-130.14	-171.99	-171.94	-84.20	-84.25	-162.65	-121.53
118	0	EOC: EOC: Other PT Losses	-130.14	-171.99	-171.94	-84.20	-84.25	-162.64	-121.53
118	1	EOC: EOC: Other PT Losses	-130.14	-136.51	-136.45	-123.15	-123.20	-135.06	-128.83
118	2	EOC: EOC: Other PT Losses	-130.13	-71.33	-71.27	-194.68	-194.74	-84.41	-142.24
119	0	EOC: EOC: Other PT Losses	-130.13	-71.33	-71.27	-194.69	-194.74	-84.41	-142.24
119	1	EOC: EOC: Other PT Losses	-130.13	-54.15	-54.10	-213.54	-213.59	-71.06	-145.77
119	2	EOC: EOC: Other PT Losses	-130.12	-35.33	-35.27	-234.20	-234.26	-56.43	-149.64
121	0	EOC: EOC: Other PT Losses	-78.97	-82.91	-82.85	-74.66	-74.72	-82.01	-78.17
121	1	EOC: EOC: Other PT Losses	-78.97	-91.26	-91.20	-65.49	-65.54	-88.50	-76.45
121	2	EOC: EOC: Other PT Losses	-78.97	-98.79	-98.73	-57.21	-57.27	-94.35	-74.90
122	0	EOC: EOC: Other PT Losses	-78.97	-98.79	-98.73	-57.21	-57.27	-94.35	-74.90
122	1	EOC: EOC: Other PT Losses	-78.96	-127.29	-127.23	-25.90	-25.96	-116.50	-69.02
122	2	EOC: EOC: Other PT Losses	-78.95	-120.36	-120.29	-33.50	-33.55	-111.11	-70.43
123	0	EOC: EOC: Other PT Losses	-78.95	-120.36	-120.29	-33.50	-33.55	-111.11	-70.43
123	1	EOC: EOC: Other PT Losses	-78.94	-80.59	-80.52	-77.14	-77.20	-80.20	-78.61
123	2	EOC: EOC: Other PT Losses	-78.93	-7.76	-7.70	-157.08	-157.13	-23.60	-93.59
124	0	EOC: EOC: Other PT Losses	-78.93	-7.76	-7.70	-157.08	-157.14	-23.60	-93.59
124	1	EOC: EOC: Other PT Losses	-78.93	3.67	3.73	-169.63	-169.68	-14.71	-95.94
124	2	EOC: EOC: Other PT Losses	-78.93	15.73	15.79	-182.86	-182.92	-5.34	-98.42
126	0	EOC: EOC: Other PT Losses	22.78	-38.35	-38.28	89.90	89.84	-24.70	35.36
126	1	EOC: EOC: Other PT Losses	22.79	-43.57	-43.51	95.63	95.58	-28.76	36.44
126	2	EOC: EOC: Other PT Losses	22.79	-46.52	-46.45	98.88	98.82	-31.05	37.05
127	0	EOC: EOC: Other PT Losses	22.79	-46.52	-46.45	98.88	98.82	-31.05	37.05
127	1	EOC: EOC: Other PT Losses	22.80	-38.40	-38.33	89.98	89.92	-24.73	35.39
127	2	EOC: EOC: Other PT Losses	22.81	-3.54	-3.48	51.73	51.67	2.35	28.22
128	0	EOC: EOC: Other PT Losses	22.81	-3.54	-3.48	51.73	51.67	2.35	28.22
128	1	EOC: EOC: Other PT Losses	22.81	57.99	58.06	-15.82	-15.88	50.18	15.56
133	0	EOC: EOC: Other PT Losses	9.28	94.07	94.23	-83.82	-83.96	75.24	-8.19
133	1	EOC: EOC: Other PT Losses	9.29	25.31	25.47	-8.32	-8.45	21.80	5.98
133	2	EOC: EOC: Other PT Losses	9.30	-17.13	-16.99	38.31	38.17	-11.19	14.73
134	0	EOC: EOC: Other PT Losses	9.30	-17.13	-16.99	38.31	38.17	-11.19	14.73
134	1	EOC: EOC: Other PT Losses	9.31	-33.28	-33.14	56.05	55.92	-23.73	18.06
134	2	EOC: EOC: Other PT Losses	9.32	-22.48	-22.35	44.22	44.10	-15.35	15.85
135	0	EOC: EOC: Other PT Losses	9.32	-22.48	-22.35	44.22	44.10	-15.35	15.85
135	1	EOC: EOC: Other PT Losses	9.32	-14.08	-13.95	35.00	34.88	-8.82	14.12
135	2	EOC: EOC: Other PT Losses	9.32	-3.32	-3.20	23.19	23.08	-0.46	11.91
137	0	EOC: EOC: Other PT Losses	-38.75	21.81	21.93	-105.25	-105.36	8.36	-51.23
137	1	EOC: EOC: Other PT Losses	-38.75	10.98	11.11	-93.37	-93.48	-0.05	-49.00
137	2	EOC: EOC: Other PT Losses	-38.75	0.76	0.88	-82.14	-82.25	-8.00	-46.89
138	0	EOC: EOC: Other PT Losses	-38.75	0.76	0.88	-82.14	-82.25	-8.00	-46.90
138	1	EOC: EOC: Other PT Losses	-38.75	-26.02	-25.90	-52.73	-52.83	-28.81	-41.38
138	2	EOC: EOC: Other PT Losses	-38.74	-48.32	-48.20	-28.24	-28.34	-46.14	-36.78
139	0	EOC: EOC: Other PT Losses	-38.74	-48.32	-48.20	-28.24	-28.34	-46.14	-36.78
139	1	EOC: EOC: Other PT Losses	-38.74	-66.83	-66.72	-7.91	-8.00	-60.53	-32.97
139	2	EOC: EOC: Other PT Losses	-38.73	-79.21	-79.11	5.70	5.60	-70.15	-30.41

MEMBER STRESSES

DECK & CANOPY MEMBERS
EOC

(-) compression

			SELWEIGHT (DC)						
Member	Station	Result Case	(P/A) @ Centroid (kips/ft²)	Normal Stress @ Point 1 (kips/ft²)	Normal Stress @ Point 2 (kips/ft²)	Normal Stress @ Point 3 (kips/ft²)	Normal Stress @ Point 4 (kips/ft²)	Normal Stress @ Point 5 (kips/ft²)	Normal Stress @ Point 6 (kips/ft²)
140	0	EOC: EOC: Other PT Losses	-38.73	-79.21	-79.11	5.70	5.60	-70.15	-30.41
140	1	EOC: EOC: Other PT Losses	-38.73	-81.13	-81.02	7.80	7.71	-71.64	-30.02
140	2	EOC: EOC: Other PT Losses	-38.73	-82.60	-82.50	9.43	9.33	-72.79	-29.71
142	0	EOC: EOC: Other PT Losses	-41.39	-45.36	-45.26	-37.05	-37.14	-44.44	-40.59
142	1	EOC: EOC: Other PT Losses	-41.39	-51.96	-51.86	-29.80	-29.89	-49.56	-39.23
142	2	EOC: EOC: Other PT Losses	-41.39	-57.36	-57.26	-23.87	-23.96	-53.76	-38.11
143	0	EOC: EOC: Other PT Losses	-41.39	-57.36	-57.26	-23.87	-23.96	-53.76	-38.11
143	1	EOC: EOC: Other PT Losses	-41.39	-64.60	-64.51	-15.91	-16.00	-59.39	-36.62
143	2	EOC: EOC: Other PT Losses	-41.38	-67.71	-67.62	-12.49	-12.57	-61.81	-35.97
144	0	EOC: EOC: Other PT Losses	-41.38	-67.71	-67.62	-12.49	-12.57	-61.81	-35.97
144	1	EOC: EOC: Other PT Losses	-41.38	-66.06	-65.97	-14.29	-14.37	-60.53	-36.31
144	2	EOC: EOC: Other PT Losses	-41.38	-58.58	-58.50	-22.49	-22.57	-54.72	-37.84
145	0	EOC: EOC: Other PT Losses	-41.37	-58.58	-58.50	-22.49	-22.56	-54.72	-37.84
145	1	EOC: EOC: Other PT Losses	-41.37	-55.13	-55.05	-26.27	-26.35	-52.03	-38.55
145	2	EOC: EOC: Other PT Losses	-41.37	-51.26	-51.18	-30.53	-30.60	-49.02	-39.34
147	0	EOC: EOC: Other PT Losses	-36.09	-45.30	-45.22	-25.99	-26.06	-43.22	-34.20
147	1	EOC: EOC: Other PT Losses	-36.09	-51.45	-51.38	-19.23	-19.29	-48.00	-32.93
147	2	EOC: EOC: Other PT Losses	-36.09	-56.16	-56.09	-14.05	-14.12	-51.66	-31.96
148	0	EOC: EOC: Other PT Losses	-36.09	-56.16	-56.09	-14.05	-14.12	-51.66	-31.96
148	1	EOC: EOC: Other PT Losses	-36.08	-61.18	-61.11	-8.53	-8.59	-55.56	-30.92
148	2	EOC: EOC: Other PT Losses	-36.08	-62.25	-62.18	-7.36	-7.42	-56.39	-30.70
149	0	EOC: EOC: Other PT Losses	-36.08	-62.25	-62.18	-7.36	-7.42	-56.39	-30.70
149	1	EOC: EOC: Other PT Losses	-36.08	-58.58	-58.52	-11.37	-11.43	-53.55	-31.45
149	2	EOC: EOC: Other PT Losses	-36.07	-49.45	-49.39	-21.39	-21.44	-46.45	-33.33
150	0	EOC: EOC: Other PT Losses	-36.07	-49.45	-49.39	-21.39	-21.44	-46.44	-33.32
150	1	EOC: EOC: Other PT Losses	-36.07	-45.42	-45.36	-25.81	-25.86	-43.31	-34.15
150	2	EOC: EOC: Other PT Losses	-36.07	-40.93	-40.87	-30.74	-30.78	-39.82	-35.07
152	0	EOC: EOC: Other PT Losses	-23.18	-77.38	-77.33	36.32	36.27	-65.28	-12.03
152	1	EOC: EOC: Other PT Losses	-23.18	-72.12	-72.07	30.55	30.51	-61.20	-13.11
152	2	EOC: EOC: Other PT Losses	-23.18	-65.23	-65.18	22.99	22.95	-55.84	-14.53
153	0	EOC: EOC: Other PT Losses	-23.18	-65.23	-65.18	22.99	22.95	-55.84	-14.52
153	1	EOC: EOC: Other PT Losses	-23.17	-50.89	-50.85	7.26	7.22	-44.70	-17.47
153	2	EOC: EOC: Other PT Losses	-23.17	-32.75	-32.71	-12.65	-12.69	-30.60	-21.20
154	0	EOC: EOC: Other PT Losses	-23.17	-32.76	-32.71	-12.65	-12.69	-30.60	-21.20
154	1	EOC: EOC: Other PT Losses	-23.17	-8.16	-8.13	-39.65	-39.68	-11.49	-26.26
154	2	EOC: EOC: Other PT Losses	-23.16	21.68	21.72	-72.40	-72.43	11.70	-32.40
155	0	EOC: EOC: Other PT Losses	-23.16	21.69	21.72	-72.40	-72.43	11.71	-32.39
155	1	EOC: EOC: Other PT Losses	-23.16	32.08	32.11	-83.80	-83.83	19.78	-34.53
155	2	EOC: EOC: Other PT Losses	-23.15	42.96	43.00	-95.75	-95.78	28.24	-36.77
157	0	EOC: EOC: Other PT Losses	-2.50	4.62	4.65	-10.32	-10.35	3.05	-3.97
157	1	EOC: EOC: Other PT Losses	-2.50	-2.77	-2.75	-2.20	-2.22	-2.70	-2.44
157	2	EOC: EOC: Other PT Losses	-2.49	-8.39	-8.36	3.98	3.95	-7.07	-1.28
158	0	EOC: EOC: Other PT Losses	-2.49	-8.39	-8.37	3.98	3.95	-7.07	-1.28
158	1	EOC: EOC: Other PT Losses	-2.49	-16.22	-16.20	12.58	12.57	-13.15	0.34
158	2	EOC: EOC: Other PT Losses	-2.48	-8.79	-8.77	4.44	4.43	-7.38	-1.19
159	0	EOC: EOC: Other PT Losses	-2.48	-8.79	-8.77	4.44	4.43	-7.38	-1.19
159	1	EOC: EOC: Other PT Losses	-2.48	14.32	14.33	-20.92	-20.93	10.58	-5.94
159	2	EOC: EOC: Other PT Losses	-2.47	53.13	53.13	-63.51	-63.51	40.74	-13.92

MEMBER STRESSES

DECK & CANOPY MEMBERS
EOC

(-) compression

			NONSTRUCTURAL COMPONENTS (DC)						
Member	Station	Result Case	(P/A) @ Centroid (kips/ft²)	Normal Stress @ Point 1 (kips/ft²)	Normal Stress @ Point 2 (kips/ft²)	Normal Stress @ Point 3 (kips/ft²)	Normal Stress @ Point 4 (kips/ft²)	Normal Stress @ Point 5 (kips/ft²)	Normal Stress @ Point 6 (kips/ft²)
1	0	EOC: EOC: Other PT Losses	0.06	2.45	2.45	0.41	0.41	1.72	-3.54
1	1	EOC: EOC: Other PT Losses	0.06	2.46	2.46	0.41	0.41	1.73	-3.54
1	2	EOC: EOC: Other PT Losses	0.06	2.46	2.46	0.41	0.41	1.73	-3.55
2	0	EOC: EOC: Other PT Losses	0.05	2.55	2.55	0.41	0.41	1.79	-3.72
2	1	EOC: EOC: Other PT Losses	0.05	1.81	1.81	0.30	0.30	1.28	-2.61
2	2	EOC: EOC: Other PT Losses	0.05	1.08	1.08	0.20	0.20	0.76	-1.50
3	0	EOC: EOC: Other PT Losses	0.87	2.37	2.37	1.09	1.09	1.91	-1.40
3	1	EOC: EOC: Other PT Losses	0.87	1.27	1.27	0.92	0.92	1.15	0.26
3	2	EOC: EOC: Other PT Losses	0.87	0.38	0.38	0.79	0.79	0.53	1.59
4	0	EOC: EOC: Other PT Losses	0.87	0.38	0.38	0.79	0.79	0.53	1.59
4	1	EOC: EOC: Other PT Losses	0.87	-0.79	-0.79	0.62	0.62	-0.28	3.35
4	2	EOC: EOC: Other PT Losses	0.87	-0.96	-0.96	0.60	0.60	-0.40	3.61
5	0	EOC: EOC: Other PT Losses	0.87	-0.96	-0.96	0.60	0.60	-0.40	3.61
5	1	EOC: EOC: Other PT Losses	0.87	-0.13	-0.13	0.72	0.72	0.17	2.37
5	2	EOC: EOC: Other PT Losses	0.87	1.69	1.69	0.99	0.99	1.44	-0.37
6	0	EOC: EOC: Other PT Losses	0.87	1.69	1.69	0.99	0.99	1.44	-0.37
6	1	EOC: EOC: Other PT Losses	0.87	2.01	2.01	1.03	1.04	1.66	-0.84
6	2	EOC: EOC: Other PT Losses	0.87	2.34	2.34	1.08	1.08	1.90	-1.35
7	0	EOC: EOC: Other PT Losses	0.76	2.72	2.72	1.05	1.05	2.13	-2.18
7	1	EOC: EOC: Other PT Losses	0.76	2.45	2.45	1.01	1.01	1.94	-1.77
7	2	EOC: EOC: Other PT Losses	0.76	2.18	2.18	0.97	0.97	1.75	-1.37
8	0	EOC: EOC: Other PT Losses	0.96	2.49	2.49	1.19	1.19	2.03	-1.33
8	1	EOC: EOC: Other PT Losses	0.96	1.46	1.46	1.04	1.04	1.31	0.21
8	2	EOC: EOC: Other PT Losses	0.96	0.61	0.61	0.91	0.91	0.72	1.49
9	0	EOC: EOC: Other PT Losses	0.96	0.61	0.61	0.91	0.91	0.72	1.49
9	1	EOC: EOC: Other PT Losses	0.96	-0.72	-0.73	0.72	0.72	-0.21	3.50
9	2	EOC: EOC: Other PT Losses	0.96	-0.94	-0.94	0.68	0.69	-0.36	3.83
10	0	EOC: EOC: Other PT Losses	0.96	-0.94	-0.94	0.68	0.69	-0.36	3.83
10	1	EOC: EOC: Other PT Losses	0.97	-0.03	-0.03	0.82	0.82	0.27	2.46
10	2	EOC: EOC: Other PT Losses	0.97	2.01	2.01	1.12	1.12	1.69	-0.61
11	0	EOC: EOC: Other PT Losses	0.97	2.01	2.01	1.12	1.12	1.69	-0.61
11	1	EOC: EOC: Other PT Losses	0.97	2.37	2.37	1.17	1.17	1.94	-1.15
11	2	EOC: EOC: Other PT Losses	0.97	2.75	2.75	1.23	1.23	2.21	-1.72
12	0	EOC: EOC: Other PT Losses	0.96	2.71	2.71	1.21	1.22	2.18	-1.67
12	1	EOC: EOC: Other PT Losses	0.96	2.68	2.68	1.21	1.21	2.16	-1.63
12	2	EOC: EOC: Other PT Losses	0.96	2.66	2.66	1.21	1.21	2.14	-1.59
13	0	EOC: EOC: Other PT Losses	0.76	2.55	2.54	1.02	1.02	2.00	-1.92
13	1	EOC: EOC: Other PT Losses	0.76	1.62	1.62	0.88	0.89	1.36	-0.54
13	2	EOC: EOC: Other PT Losses	0.76	0.84	0.83	0.77	0.77	0.81	0.65
14	0	EOC: EOC: Other PT Losses	0.76	0.84	0.83	0.77	0.77	0.81	0.65
14	1	EOC: EOC: Other PT Losses	0.76	-0.76	-0.76	0.54	0.54	-0.30	3.04
14	2	EOC: EOC: Other PT Losses	0.76	-1.00	-1.00	0.50	0.51	-0.47	3.41
15	0	EOC: EOC: Other PT Losses	0.76	-1.00	-1.00	0.50	0.51	-0.47	3.41
15	1	EOC: EOC: Other PT Losses	0.76	0.10	0.10	0.66	0.67	0.30	1.76
15	2	EOC: EOC: Other PT Losses	0.76	2.55	2.54	1.02	1.03	2.00	-1.92
16	0	EOC: EOC: Other PT Losses	0.76	2.55	2.54	1.02	1.03	2.00	-1.92
16	1	EOC: EOC: Other PT Losses	0.76	2.92	2.92	1.08	1.08	2.26	-2.48
16	2	EOC: EOC: Other PT Losses	0.76	3.31	3.31	1.13	1.14	2.54	-3.07

MEMBER STRESSES

DECK & CANOPY MEMBERS
EOC

(-) compression

			NONSTRUCTURAL COMPONENTS (DC)						
Member	Station	Result Case	(P/A) @ Centroid (kips/ft²)	Normal Stress @ Point 1 (kips/ft²)	Normal Stress @ Point 2 (kips/ft²)	Normal Stress @ Point 3 (kips/ft²)	Normal Stress @ Point 4 (kips/ft²)	Normal Stress @ Point 5 (kips/ft²)	Normal Stress @ Point 6 (kips/ft²)
17	0	EOC: EOC: Other PT Losses	0.74	2.99	2.99	1.07	1.08	2.31	-2.63
17	1	EOC: EOC: Other PT Losses	0.74	3.19	3.18	1.10	1.10	2.44	-2.92
17	2	EOC: EOC: Other PT Losses	0.74	3.38	3.38	1.13	1.13	2.58	-3.22
18	0	EOC: EOC: Other PT Losses	0.31	2.99	2.99	0.70	0.70	2.18	-3.73
18	1	EOC: EOC: Other PT Losses	0.31	2.14	2.13	0.57	0.58	1.58	-2.44
18	2	EOC: EOC: Other PT Losses	0.31	1.37	1.37	0.46	0.47	1.05	-1.29
19	0	EOC: EOC: Other PT Losses	0.31	1.37	1.37	0.46	0.47	1.05	-1.29
19	1	EOC: EOC: Other PT Losses	0.31	-0.92	-0.92	0.13	0.13	-0.55	2.16
19	2	EOC: EOC: Other PT Losses	0.31	-1.62	-1.63	0.02	0.03	-1.04	3.22
20	0	EOC: EOC: Other PT Losses	0.31	-1.62	-1.63	0.02	0.03	-1.04	3.22
20	1	EOC: EOC: Other PT Losses	0.31	-0.74	-0.75	0.15	0.16	-0.42	1.89
20	2	EOC: EOC: Other PT Losses	0.31	1.73	1.73	0.51	0.52	1.30	-1.82
21	0	EOC: EOC: Other PT Losses	0.31	1.73	1.73	0.51	0.52	1.30	-1.82
21	1	EOC: EOC: Other PT Losses	0.31	2.33	2.33	0.60	0.61	1.72	-2.72
21	2	EOC: EOC: Other PT Losses	0.31	2.98	2.98	0.70	0.70	2.17	-3.70
22	0	EOC: EOC: Other PT Losses	0.13	2.52	2.51	0.47	0.48	1.79	-3.46
22	1	EOC: EOC: Other PT Losses	0.13	2.91	2.91	0.53	0.54	2.06	-4.06
22	2	EOC: EOC: Other PT Losses	0.13	3.31	3.30	0.59	0.60	2.34	-4.65
23	0	EOC: EOC: Other PT Losses	-0.28	2.79	2.78	0.16	0.17	1.85	-4.90
23	1	EOC: EOC: Other PT Losses	-0.28	2.19	2.18	0.07	0.08	1.43	-3.99
23	2	EOC: EOC: Other PT Losses	-0.28	1.62	1.62	-0.01	0.00	1.04	-3.14
24	0	EOC: EOC: Other PT Losses	-0.28	1.62	1.62	-0.01	0.00	1.04	-3.14
24	1	EOC: EOC: Other PT Losses	-0.28	-1.10	-1.11	-0.41	-0.40	-0.86	0.96
24	2	EOC: EOC: Other PT Losses	-0.28	-2.01	-2.02	-0.54	-0.53	-1.49	2.32
25	0	EOC: EOC: Other PT Losses	-0.28	-2.01	-2.02	-0.54	-0.53	-1.49	2.32
25	1	EOC: EOC: Other PT Losses	-0.28	-1.10	-1.10	-0.40	-0.40	-0.85	0.95
25	2	EOC: EOC: Other PT Losses	-0.28	1.64	1.63	0.00	0.00	1.05	-3.16
26	0	EOC: EOC: Other PT Losses	-0.28	1.64	1.63	0.00	0.00	1.05	-3.16
26	1	EOC: EOC: Other PT Losses	-0.28	2.63	2.63	0.14	0.15	1.75	-4.65
26	2	EOC: EOC: Other PT Losses	-0.28	3.75	3.74	0.30	0.31	2.52	-6.33
29	0	EOC: EOC: Other PT Losses	-0.71	2.58	2.59	-0.22	-0.23	1.59	-5.67
29	1	EOC: EOC: Other PT Losses	-0.71	1.49	1.50	-0.38	-0.39	0.82	-4.02
29	2	EOC: EOC: Other PT Losses	-0.71	0.51	0.52	-0.53	-0.53	0.15	-2.55
30	0	EOC: EOC: Other PT Losses	-0.71	0.51	0.52	-0.53	-0.53	0.15	-2.55
30	1	EOC: EOC: Other PT Losses	-0.71	-2.11	-2.10	-0.91	-0.92	-1.68	1.40
30	2	EOC: EOC: Other PT Losses	-0.71	-2.91	-2.91	-1.03	-1.03	-2.24	2.61
31	0	EOC: EOC: Other PT Losses	-0.71	-2.91	-2.91	-1.03	-1.03	-2.24	2.61
31	1	EOC: EOC: Other PT Losses	-0.71	-1.90	-1.89	-0.88	-0.88	-1.53	1.08
31	2	EOC: EOC: Other PT Losses	-0.71	0.94	0.95	-0.46	-0.47	0.44	-3.19
32	0	EOC: EOC: Other PT Losses	-0.71	0.94	0.95	-0.46	-0.47	0.44	-3.19
32	1	EOC: EOC: Other PT Losses	-0.71	1.51	1.52	-0.38	-0.38	0.84	-4.04
32	2	EOC: EOC: Other PT Losses	-0.71	2.12	2.13	-0.29	-0.29	1.26	-4.96
33	0	EOC: EOC: Other PT Losses	-0.56	2.10	2.10	-0.17	-0.17	1.29	-4.55
33	1	EOC: EOC: Other PT Losses	-0.56	2.08	2.09	-0.17	-0.17	1.28	-4.53
33	2	EOC: EOC: Other PT Losses	-0.56	2.06	2.07	-0.17	-0.18	1.27	-4.50
34	0	EOC: EOC: Other PT Losses	-0.56	1.95	1.96	-0.19	-0.19	1.19	-4.34
34	1	EOC: EOC: Other PT Losses	-0.56	1.66	1.67	-0.23	-0.23	0.99	-3.90
34	2	EOC: EOC: Other PT Losses	-0.56	1.39	1.40	-0.27	-0.27	0.80	-3.49

MEMBER STRESSES

DECK & CANOPY MEMBERS
EOC

(-) compression

			NONSTRUCTURAL COMPONENTS (DC)						
Member	Station	Result Case	(P/A) @ Centroid (kips/ft²)	Normal Stress @ Point 1 (kips/ft²)	Normal Stress @ Point 2 (kips/ft²)	Normal Stress @ Point 3 (kips/ft²)	Normal Stress @ Point 4 (kips/ft²)	Normal Stress @ Point 5 (kips/ft²)	Normal Stress @ Point 6 (kips/ft²)
35	0	EOC: EOC: Other PT Losses	-0.56	1.39	1.40	-0.27	-0.27	0.80	-3.49
35	1	EOC: EOC: Other PT Losses	-0.56	0.68	0.68	-0.37	-0.38	0.30	-2.42
35	2	EOC: EOC: Other PT Losses	-0.56	0.16	0.16	-0.45	-0.45	-0.06	-1.63
36	0	EOC: EOC: Other PT Losses	-0.56	0.16	0.16	-0.45	-0.45	-0.06	-1.63
36	1	EOC: EOC: Other PT Losses	-0.56	-0.17	-0.16	-0.50	-0.50	-0.29	-1.14
36	2	EOC: EOC: Other PT Losses	-0.56	-0.30	-0.30	-0.52	-0.52	-0.38	-0.94
37	0	EOC: EOC: Other PT Losses	-0.56	-0.30	-0.30	-0.52	-0.52	-0.38	-0.94
37	1	EOC: EOC: Other PT Losses	-0.56	-0.30	-0.29	-0.52	-0.52	-0.37	-0.95
37	2	EOC: EOC: Other PT Losses	-0.56	-0.24	-0.23	-0.51	-0.51	-0.33	-1.04
38	0	EOC: EOC: Other PT Losses	-0.47	-0.06	-0.05	-0.41	-0.41	-0.18	-1.09
38	1	EOC: EOC: Other PT Losses	-0.47	-0.09	-0.09	-0.41	-0.42	-0.21	-1.04
38	2	EOC: EOC: Other PT Losses	-0.47	-0.12	-0.12	-0.42	-0.42	-0.23	-0.99
39	0	EOC: EOC: Other PT Losses	-0.47	0.04	0.05	-0.39	-0.39	-0.11	-1.23
39	1	EOC: EOC: Other PT Losses	-0.47	-0.11	-0.11	-0.41	-0.41	-0.22	-1.00
39	2	EOC: EOC: Other PT Losses	-0.47	-0.25	-0.25	-0.43	-0.44	-0.31	-0.79
40	0	EOC: EOC: Other PT Losses	-0.47	-0.25	-0.25	-0.43	-0.44	-0.31	-0.79
40	1	EOC: EOC: Other PT Losses	-0.46	-0.56	-0.55	-0.48	-0.48	-0.53	-0.33
40	2	EOC: EOC: Other PT Losses	-0.46	-0.70	-0.70	-0.50	-0.50	-0.63	-0.11
41	0	EOC: EOC: Other PT Losses	-0.46	-0.70	-0.70	-0.50	-0.50	-0.63	-0.11
41	1	EOC: EOC: Other PT Losses	-0.46	-0.69	-0.68	-0.50	-0.50	-0.62	-0.13
41	2	EOC: EOC: Other PT Losses	-0.46	-0.51	-0.51	-0.47	-0.47	-0.50	-0.39
42	0	EOC: EOC: Other PT Losses	-0.46	-0.51	-0.51	-0.47	-0.47	-0.50	-0.39
42	1	EOC: EOC: Other PT Losses	-0.46	-0.33	-0.32	-0.44	-0.44	-0.37	-0.67
42	2	EOC: EOC: Other PT Losses	-0.46	-0.08	-0.07	-0.41	-0.41	-0.19	-1.05
43	0	EOC: EOC: Other PT Losses	-0.34	0.10	0.10	-0.27	-0.27	-0.03	-0.99
43	1	EOC: EOC: Other PT Losses	-0.34	0.07	0.07	-0.28	-0.28	-0.05	-0.95
43	2	EOC: EOC: Other PT Losses	-0.34	0.04	0.04	-0.28	-0.28	-0.07	-0.90
44	0	EOC: EOC: Other PT Losses	-0.33	0.21	0.21	-0.25	-0.25	0.05	-1.13
44	1	EOC: EOC: Other PT Losses	-0.33	0.03	0.03	-0.27	-0.28	-0.08	-0.86
44	2	EOC: EOC: Other PT Losses	-0.33	-0.13	-0.13	-0.30	-0.30	-0.19	-0.62
45	0	EOC: EOC: Other PT Losses	-0.33	-0.13	-0.13	-0.30	-0.30	-0.19	-0.62
45	1	EOC: EOC: Other PT Losses	-0.33	-0.48	-0.48	-0.35	-0.35	-0.44	-0.09
45	2	EOC: EOC: Other PT Losses	-0.33	-0.70	-0.70	-0.38	-0.38	-0.59	0.24
46	0	EOC: EOC: Other PT Losses	-0.33	-0.70	-0.70	-0.38	-0.38	-0.59	0.24
46	1	EOC: EOC: Other PT Losses	-0.33	-0.78	-0.78	-0.39	-0.39	-0.64	0.35
46	2	EOC: EOC: Other PT Losses	-0.33	-0.72	-0.72	-0.38	-0.38	-0.60	0.27
47	0	EOC: EOC: Other PT Losses	-0.33	-0.72	-0.72	-0.38	-0.38	-0.60	0.27
47	1	EOC: EOC: Other PT Losses	-0.33	-0.59	-0.59	-0.36	-0.37	-0.51	0.08
47	2	EOC: EOC: Other PT Losses	-0.33	-0.40	-0.40	-0.33	-0.34	-0.37	-0.22
48	0	EOC: EOC: Other PT Losses	-0.23	-0.28	-0.28	-0.24	-0.24	-0.27	-0.16
48	1	EOC: EOC: Other PT Losses	-0.23	-0.30	-0.30	-0.24	-0.24	-0.28	-0.14
48	2	EOC: EOC: Other PT Losses	-0.23	-0.31	-0.31	-0.24	-0.25	-0.29	-0.11
49	0	EOC: EOC: Other PT Losses	-0.27	-0.23	-0.23	-0.27	-0.27	-0.24	-0.34
49	1	EOC: EOC: Other PT Losses	-0.27	-0.01	-0.01	-0.23	-0.24	-0.09	-0.67
49	2	EOC: EOC: Other PT Losses	-0.27	0.23	0.23	-0.20	-0.20	0.08	-1.03
50	0	EOC: EOC: Other PT Losses	-0.27	0.23	0.23	-0.20	-0.20	0.08	-1.03
50	1	EOC: EOC: Other PT Losses	-0.27	0.95	0.95	-0.09	-0.09	0.58	-2.11
50	2	EOC: EOC: Other PT Losses	-0.27	1.79	1.79	0.03	0.03	1.17	-3.38

MEMBER STRESSES

DECK & CANOPY MEMBERS
EOC

(-) compression

			NONSTRUCTURAL COMPONENTS (DC)						
Member	Station	Result Case	(P/A) @ Centroid (kips/ft²)	Normal Stress @ Point 1 (kips/ft²)	Normal Stress @ Point 2 (kips/ft²)	Normal Stress @ Point 3 (kips/ft²)	Normal Stress @ Point 4 (kips/ft²)	Normal Stress @ Point 5 (kips/ft²)	Normal Stress @ Point 6 (kips/ft²)
51	0	EOC: EOC: Other PT Losses	-0.27	1.79	1.79	0.03	0.03	1.17	-3.38
51	1	EOC: EOC: Other PT Losses	-0.27	2.76	2.76	0.17	0.17	1.84	-4.83
51	2	EOC: EOC: Other PT Losses	-0.27	3.85	3.85	0.33	0.33	2.59	-6.47
52	0	EOC: EOC: Other PT Losses	-0.27	3.85	3.85	0.33	0.33	2.59	-6.47
52	1	EOC: EOC: Other PT Losses	-0.27	4.80	4.80	0.47	0.47	3.26	-7.89
52	2	EOC: EOC: Other PT Losses	-0.27	5.82	5.82	0.62	0.62	3.97	-9.44
60	0	EOC: EOC: Other PT Losses	0.00	0.00	0.00	0.00	0.00	0.00	0.00
60	1	EOC: EOC: Other PT Losses	0.00	0.00	0.00	0.00	0.00	0.00	0.00
60	2	EOC: EOC: Other PT Losses	0.00	0.00	0.00	0.00	0.00	0.00	0.00
101	0	EOC: EOC: Other PT Losses	-0.16	3.76	3.76	-4.47	-4.47	2.88	-0.97
101	1	EOC: EOC: Other PT Losses	-0.16	3.51	3.51	-4.20	-4.20	2.69	-0.92
101	2	EOC: EOC: Other PT Losses	-0.16	3.26	3.26	-3.92	-3.92	2.50	-0.87
102	0	EOC: EOC: Other PT Losses	-0.16	3.26	3.26	-3.92	-3.92	2.50	-0.87
102	1	EOC: EOC: Other PT Losses	-0.16	1.77	1.77	-2.29	-2.29	1.34	-0.56
102	2	EOC: EOC: Other PT Losses	-0.16	0.27	0.27	-0.65	-0.65	0.18	-0.26
103	0	EOC: EOC: Other PT Losses	-0.16	0.27	0.27	-0.65	-0.65	0.18	-0.26
103	1	EOC: EOC: Other PT Losses	-0.16	-1.20	-1.20	0.97	0.97	-0.97	0.05
103	2	EOC: EOC: Other PT Losses	-0.16	-2.67	-2.67	2.59	2.59	-2.11	0.35
104	0	EOC: EOC: Other PT Losses	-0.16	-2.67	-2.67	2.59	2.59	-2.11	0.35
104	1	EOC: EOC: Other PT Losses	-0.16	-3.08	-3.08	3.03	3.03	-2.43	0.44
104	2	EOC: EOC: Other PT Losses	-0.16	-3.49	-3.49	3.48	3.48	-2.75	0.52
106	0	EOC: EOC: Other PT Losses	-2.17	-0.94	-0.94	-3.52	-3.52	-1.22	-2.42
106	1	EOC: EOC: Other PT Losses	-2.17	-1.06	-1.06	-3.39	-3.39	-1.31	-2.40
106	2	EOC: EOC: Other PT Losses	-2.17	-1.17	-1.17	-3.27	-3.27	-1.40	-2.38
107	0	EOC: EOC: Other PT Losses	-2.17	-1.17	-1.17	-3.27	-3.27	-1.40	-2.38
107	1	EOC: EOC: Other PT Losses	-2.17	-1.90	-1.90	-2.47	-2.47	-1.96	-2.23
107	2	EOC: EOC: Other PT Losses	-2.17	-2.62	-2.62	-1.68	-1.68	-2.52	-2.08
108	0	EOC: EOC: Other PT Losses	-2.17	-2.62	-2.62	-1.68	-1.68	-2.52	-2.08
108	1	EOC: EOC: Other PT Losses	-2.17	-3.29	-3.29	-0.94	-0.94	-3.04	-1.94
108	2	EOC: EOC: Other PT Losses	-2.17	-3.97	-3.97	-0.20	-0.20	-3.57	-1.80
109	0	EOC: EOC: Other PT Losses	-2.17	-3.97	-3.97	-0.20	-0.20	-3.57	-1.80
109	1	EOC: EOC: Other PT Losses	-2.17	-4.22	-4.22	0.08	0.08	-3.76	-1.75
109	2	EOC: EOC: Other PT Losses	-2.17	-4.47	-4.47	0.36	0.36	-3.96	-1.70
111	0	EOC: EOC: Other PT Losses	-3.02	-4.17	-4.17	-1.75	-1.75	-3.91	-2.78
111	1	EOC: EOC: Other PT Losses	-3.02	-4.11	-4.11	-1.82	-1.82	-3.87	-2.79
111	2	EOC: EOC: Other PT Losses	-3.02	-4.05	-4.05	-1.88	-1.88	-3.82	-2.80
112	0	EOC: EOC: Other PT Losses	-3.02	-4.05	-4.05	-1.88	-1.88	-3.82	-2.80
112	1	EOC: EOC: Other PT Losses	-3.02	-3.81	-3.81	-2.14	-2.14	-3.64	-2.85
112	2	EOC: EOC: Other PT Losses	-3.02	-3.58	-3.58	-2.40	-2.40	-3.45	-2.90
113	0	EOC: EOC: Other PT Losses	-3.02	-3.58	-3.58	-2.40	-2.40	-3.45	-2.90
113	1	EOC: EOC: Other PT Losses	-3.02	-3.32	-3.32	-2.69	-2.69	-3.25	-2.95
113	2	EOC: EOC: Other PT Losses	-3.02	-3.05	-3.05	-2.97	-2.97	-3.05	-3.01
114	0	EOC: EOC: Other PT Losses	-3.02	-3.05	-3.05	-2.97	-2.97	-3.05	-3.01
114	1	EOC: EOC: Other PT Losses	-3.02	-3.00	-3.00	-3.04	-3.04	-3.00	-3.02
114	2	EOC: EOC: Other PT Losses	-3.02	-2.94	-2.94	-3.10	-3.10	-2.96	-3.03
116	0	EOC: EOC: Other PT Losses	-2.87	-4.16	-4.16	-1.44	-1.44	-3.87	-2.60
116	1	EOC: EOC: Other PT Losses	-2.87	-4.08	-4.09	-1.53	-1.53	-3.81	-2.61
116	2	EOC: EOC: Other PT Losses	-2.87	-4.01	-4.01	-1.61	-1.61	-3.75	-2.63

MEMBER STRESSES

DECK & CANOPY MEMBERS
EOC

(-) compression

			NONSTRUCTURAL COMPONENTS (DC)						
Member	Station	Result Case	(P/A) @ Centroid (kips/ft²)	Normal Stress @ Point 1 (kips/ft²)	Normal Stress @ Point 2 (kips/ft²)	Normal Stress @ Point 3 (kips/ft²)	Normal Stress @ Point 4 (kips/ft²)	Normal Stress @ Point 5 (kips/ft²)	Normal Stress @ Point 6 (kips/ft²)
117	0	EOC: EOC: Other PT Losses	-2.87	-4.01	-4.01	-1.61	-1.61	-3.75	-2.63
117	1	EOC: EOC: Other PT Losses	-2.87	-3.55	-3.55	-2.12	-2.12	-3.39	-2.73
117	2	EOC: EOC: Other PT Losses	-2.87	-3.09	-3.09	-2.62	-2.62	-3.04	-2.82
118	0	EOC: EOC: Other PT Losses	-2.87	-3.09	-3.09	-2.62	-2.62	-3.04	-2.82
118	1	EOC: EOC: Other PT Losses	-2.87	-2.61	-2.61	-3.14	-3.14	-2.67	-2.92
118	2	EOC: EOC: Other PT Losses	-2.87	-2.14	-2.14	-3.66	-3.66	-2.30	-3.02
119	0	EOC: EOC: Other PT Losses	-2.87	-2.14	-2.14	-3.66	-3.66	-2.30	-3.02
119	1	EOC: EOC: Other PT Losses	-2.87	-2.05	-2.05	-3.76	-3.76	-2.23	-3.03
119	2	EOC: EOC: Other PT Losses	-2.87	-1.97	-1.97	-3.85	-3.85	-2.17	-3.05
121	0	EOC: EOC: Other PT Losses	-1.65	-2.75	-2.75	-0.44	-0.44	-2.51	-1.42
121	1	EOC: EOC: Other PT Losses	-1.65	-2.69	-2.69	-0.51	-0.51	-2.46	-1.44
121	2	EOC: EOC: Other PT Losses	-1.65	-2.63	-2.63	-0.57	-0.57	-2.42	-1.45
122	0	EOC: EOC: Other PT Losses	-1.65	-2.63	-2.63	-0.57	-0.57	-2.42	-1.45
122	1	EOC: EOC: Other PT Losses	-1.65	-2.18	-2.18	-1.07	-1.07	-2.06	-1.54
122	2	EOC: EOC: Other PT Losses	-1.65	-1.73	-1.73	-1.57	-1.57	-1.71	-1.64
123	0	EOC: EOC: Other PT Losses	-1.65	-1.73	-1.73	-1.57	-1.57	-1.71	-1.64
123	1	EOC: EOC: Other PT Losses	-1.65	-1.27	-1.27	-2.07	-2.07	-1.36	-1.73
123	2	EOC: EOC: Other PT Losses	-1.65	-0.82	-0.82	-2.57	-2.57	-1.00	-1.82
124	0	EOC: EOC: Other PT Losses	-1.65	-0.82	-0.82	-2.57	-2.57	-1.00	-1.82
124	1	EOC: EOC: Other PT Losses	-1.65	-0.77	-0.77	-2.62	-2.62	-0.96	-1.83
124	2	EOC: EOC: Other PT Losses	-1.65	-0.71	-0.71	-2.68	-2.68	-0.92	-1.84
126	0	EOC: EOC: Other PT Losses	0.42	-1.56	-1.56	2.59	2.59	-1.12	0.82
126	1	EOC: EOC: Other PT Losses	0.42	-1.34	-1.34	2.34	2.34	-0.95	0.78
126	2	EOC: EOC: Other PT Losses	0.42	-1.12	-1.12	2.10	2.10	-0.78	0.73
127	0	EOC: EOC: Other PT Losses	0.42	-1.12	-1.12	2.10	2.10	-0.78	0.73
127	1	EOC: EOC: Other PT Losses	0.42	-0.29	-0.29	1.19	1.19	-0.13	0.56
127	2	EOC: EOC: Other PT Losses	0.42	0.53	0.53	0.29	0.29	0.51	0.39
128	0	EOC: EOC: Other PT Losses	0.42	0.53	0.53	0.29	0.29	0.51	0.39
128	1	EOC: EOC: Other PT Losses	0.42	1.37	1.37	-0.63	-0.63	1.16	0.22
133	0	EOC: EOC: Other PT Losses	0.60	1.23	1.24	-0.09	-0.10	1.09	0.47
133	1	EOC: EOC: Other PT Losses	0.60	1.09	1.09	0.07	0.07	0.98	0.50
133	2	EOC: EOC: Other PT Losses	0.60	0.94	0.94	0.23	0.23	0.87	0.53
134	0	EOC: EOC: Other PT Losses	0.60	0.94	0.94	0.23	0.23	0.87	0.53
134	1	EOC: EOC: Other PT Losses	0.60	0.79	0.79	0.39	0.39	0.75	0.56
134	2	EOC: EOC: Other PT Losses	0.60	0.64	0.65	0.56	0.55	0.63	0.59
135	0	EOC: EOC: Other PT Losses	0.60	0.64	0.65	0.56	0.55	0.63	0.59
135	1	EOC: EOC: Other PT Losses	0.60	0.61	0.61	0.60	0.60	0.61	0.60
135	2	EOC: EOC: Other PT Losses	0.60	0.57	0.57	0.64	0.64	0.58	0.61
137	0	EOC: EOC: Other PT Losses	0.30	0.97	0.97	-0.44	-0.44	0.82	0.16
137	1	EOC: EOC: Other PT Losses	0.30	0.90	0.90	-0.36	-0.36	0.76	0.17
137	2	EOC: EOC: Other PT Losses	0.30	0.83	0.83	-0.29	-0.29	0.71	0.19
138	0	EOC: EOC: Other PT Losses	0.30	0.83	0.83	-0.29	-0.29	0.71	0.19
138	1	EOC: EOC: Other PT Losses	0.30	0.62	0.62	-0.06	-0.06	0.55	0.23
138	2	EOC: EOC: Other PT Losses	0.30	0.41	0.41	0.17	0.17	0.39	0.27
139	0	EOC: EOC: Other PT Losses	0.30	0.41	0.41	0.17	0.17	0.39	0.27
139	1	EOC: EOC: Other PT Losses	0.30	0.19	0.20	0.41	0.41	0.22	0.32
139	2	EOC: EOC: Other PT Losses	0.30	-0.03	-0.02	0.65	0.65	0.05	0.36

MEMBER STRESSES

DECK & CANOPY MEMBERS
EOC

(-) compression

			NONSTRUCTURAL COMPONENTS (DC)						
Member	Station	Result Case	(P/A) @ Centroid (kips/ft²)	Normal Stress @ Point 1 (kips/ft²)	Normal Stress @ Point 2 (kips/ft²)	Normal Stress @ Point 3 (kips/ft²)	Normal Stress @ Point 4 (kips/ft²)	Normal Stress @ Point 5 (kips/ft²)	Normal Stress @ Point 6 (kips/ft²)
140	0	EOC: EOC: Other PT Losses	0.30	-0.03	-0.02	0.65	0.65	0.05	0.36
140	1	EOC: EOC: Other PT Losses	0.30	-0.09	-0.09	0.72	0.72	0.00	0.38
140	2	EOC: EOC: Other PT Losses	0.30	-0.15	-0.15	0.79	0.78	-0.05	0.39
142	0	EOC: EOC: Other PT Losses	0.47	0.45	0.45	0.49	0.49	0.45	0.47
142	1	EOC: EOC: Other PT Losses	0.47	0.45	0.45	0.49	0.49	0.46	0.47
142	2	EOC: EOC: Other PT Losses	0.47	0.45	0.45	0.49	0.49	0.46	0.47
143	0	EOC: EOC: Other PT Losses	0.47	0.45	0.45	0.49	0.49	0.46	0.47
143	1	EOC: EOC: Other PT Losses	0.47	0.45	0.45	0.49	0.49	0.46	0.47
143	2	EOC: EOC: Other PT Losses	0.47	0.45	0.45	0.49	0.49	0.46	0.47
144	0	EOC: EOC: Other PT Losses	0.47	0.45	0.45	0.49	0.49	0.46	0.47
144	1	EOC: EOC: Other PT Losses	0.47	0.46	0.46	0.48	0.48	0.46	0.47
144	2	EOC: EOC: Other PT Losses	0.47	0.46	0.46	0.48	0.48	0.47	0.47
145	0	EOC: EOC: Other PT Losses	0.47	0.46	0.46	0.48	0.48	0.47	0.47
145	1	EOC: EOC: Other PT Losses	0.47	0.46	0.46	0.48	0.48	0.46	0.47
145	2	EOC: EOC: Other PT Losses	0.47	0.46	0.46	0.49	0.48	0.46	0.47
147	0	EOC: EOC: Other PT Losses	0.47	1.47	1.48	-0.64	-0.64	1.25	0.26
147	1	EOC: EOC: Other PT Losses	0.47	1.33	1.33	-0.48	-0.48	1.14	0.29
147	2	EOC: EOC: Other PT Losses	0.47	1.18	1.18	-0.31	-0.31	1.02	0.32
148	0	EOC: EOC: Other PT Losses	0.47	1.18	1.18	-0.31	-0.31	1.02	0.32
148	1	EOC: EOC: Other PT Losses	0.47	0.91	0.91	-0.02	-0.02	0.81	0.38
148	2	EOC: EOC: Other PT Losses	0.47	0.64	0.64	0.28	0.28	0.60	0.43
149	0	EOC: EOC: Other PT Losses	0.47	0.64	0.64	0.28	0.28	0.60	0.43
149	1	EOC: EOC: Other PT Losses	0.47	0.35	0.35	0.60	0.60	0.38	0.49
149	2	EOC: EOC: Other PT Losses	0.47	0.06	0.06	0.91	0.91	0.15	0.55
150	0	EOC: EOC: Other PT Losses	0.47	0.06	0.06	0.91	0.91	0.15	0.55
150	1	EOC: EOC: Other PT Losses	0.47	-0.03	-0.03	1.01	1.01	0.08	0.57
150	2	EOC: EOC: Other PT Losses	0.47	-0.12	-0.11	1.11	1.11	0.01	0.59
152	0	EOC: EOC: Other PT Losses	0.47	1.09	1.09	-0.22	-0.22	0.95	0.34
152	1	EOC: EOC: Other PT Losses	0.47	1.00	1.00	-0.12	-0.12	0.88	0.36
152	2	EOC: EOC: Other PT Losses	0.47	0.92	0.92	-0.03	-0.03	0.82	0.37
153	0	EOC: EOC: Other PT Losses	0.47	0.92	0.92	-0.03	-0.03	0.82	0.37
153	1	EOC: EOC: Other PT Losses	0.47	0.77	0.77	0.13	0.13	0.71	0.40
153	2	EOC: EOC: Other PT Losses	0.47	0.63	0.63	0.29	0.29	0.59	0.43
154	0	EOC: EOC: Other PT Losses	0.47	0.63	0.63	0.29	0.29	0.59	0.43
154	1	EOC: EOC: Other PT Losses	0.47	0.48	0.48	0.46	0.46	0.48	0.47
154	2	EOC: EOC: Other PT Losses	0.47	0.33	0.33	0.62	0.62	0.36	0.50
155	0	EOC: EOC: Other PT Losses	0.47	0.33	0.33	0.62	0.62	0.36	0.50
155	1	EOC: EOC: Other PT Losses	0.47	0.28	0.28	0.68	0.68	0.32	0.51
155	2	EOC: EOC: Other PT Losses	0.47	0.22	0.22	0.74	0.73	0.28	0.52
157	0	EOC: EOC: Other PT Losses	0.20	2.72	2.72	-2.56	-2.56	2.16	-0.31
157	1	EOC: EOC: Other PT Losses	0.20	2.32	2.32	-2.12	-2.12	1.85	-0.23
157	2	EOC: EOC: Other PT Losses	0.20	1.92	1.92	-1.68	-1.68	1.54	-0.15
158	0	EOC: EOC: Other PT Losses	0.20	1.92	1.92	-1.68	-1.68	1.54	-0.15
158	1	EOC: EOC: Other PT Losses	0.20	0.65	0.65	-0.28	-0.28	0.55	0.11
158	2	EOC: EOC: Other PT Losses	0.20	-0.63	-0.63	1.12	1.12	-0.44	0.37
159	0	EOC: EOC: Other PT Losses	0.20	-0.63	-0.63	1.12	1.12	-0.44	0.37
159	1	EOC: EOC: Other PT Losses	0.20	-1.92	-1.92	2.53	2.53	-1.45	0.64
159	2	EOC: EOC: Other PT Losses	0.20	-3.21	-3.21	3.95	3.95	-2.45	0.91

MEMBER STRESSES

DECK & CANOPY MEMBERS
EOC

(-) compression

			CREEP (CR)						
Member	Station	Result Case	(P/A) @ Centroid (kips/ft²)	Normal Stress @ Point 1 (kips/ft²)	Normal Stress @ Point 2 (kips/ft²)	Normal Stress @ Point 3 (kips/ft²)	Normal Stress @ Point 4 (kips/ft²)	Normal Stress @ Point 5 (kips/ft²)	Normal Stress @ Point 6 (kips/ft²)
1	0	EOC: EOC: Other PT Losses	1.68	61.54	61.54	10.44	10.44	43.35	-88.31
1	1	EOC: EOC: Other PT Losses	1.68	61.69	61.69	10.46	10.46	43.45	-88.53
1	2	EOC: EOC: Other PT Losses	1.68	61.83	61.83	10.48	10.48	43.55	-88.74
2	0	EOC: EOC: Other PT Losses	1.99	58.22	58.22	10.21	10.21	41.13	-82.53
2	1	EOC: EOC: Other PT Losses	1.99	58.92	58.92	10.31	10.32	41.62	-83.59
2	2	EOC: EOC: Other PT Losses	1.99	59.62	59.62	10.42	10.42	42.10	-84.65
3	0	EOC: EOC: Other PT Losses	-0.74	45.24	45.23	5.98	5.99	31.26	-69.85
3	1	EOC: EOC: Other PT Losses	-0.74	39.47	39.46	5.14	5.14	27.25	-61.17
3	2	EOC: EOC: Other PT Losses	-0.74	33.70	33.69	4.29	4.30	23.23	-52.50
4	0	EOC: EOC: Other PT Losses	-0.74	33.70	33.69	4.29	4.30	23.23	-52.50
4	1	EOC: EOC: Other PT Losses	-0.74	21.34	21.33	2.49	2.49	14.63	-33.92
4	2	EOC: EOC: Other PT Losses	-0.74	8.98	8.97	0.68	0.69	6.02	-15.34
5	0	EOC: EOC: Other PT Losses	-0.74	8.98	8.97	0.68	0.69	6.02	-15.34
5	1	EOC: EOC: Other PT Losses	-0.74	-3.37	-3.38	-1.13	-1.12	-2.57	3.23
5	2	EOC: EOC: Other PT Losses	-0.74	-15.72	-15.73	-2.94	-2.92	-11.17	21.79
6	0	EOC: EOC: Other PT Losses	-0.74	-15.72	-15.73	-2.94	-2.92	-11.17	21.79
6	1	EOC: EOC: Other PT Losses	-0.74	-17.37	-17.39	-3.18	-3.16	-12.32	24.28
6	2	EOC: EOC: Other PT Losses	-0.74	-19.02	-19.04	-3.42	-3.40	-13.47	26.76
7	0	EOC: EOC: Other PT Losses	-0.14	-15.08	-15.10	-2.34	-2.32	-10.54	22.32
7	1	EOC: EOC: Other PT Losses	-0.14	-14.28	-14.30	-2.22	-2.20	-9.99	21.12
7	2	EOC: EOC: Other PT Losses	-0.14	-13.48	-13.50	-2.10	-2.09	-9.43	19.92
8	0	EOC: EOC: Other PT Losses	-1.40	-13.30	-13.32	-3.15	-3.13	-9.69	16.50
8	1	EOC: EOC: Other PT Losses	-1.40	-12.70	-12.72	-3.06	-3.04	-9.27	15.61
8	2	EOC: EOC: Other PT Losses	-1.40	-12.10	-12.12	-2.98	-2.96	-8.86	14.71
9	0	EOC: EOC: Other PT Losses	-1.40	-12.10	-12.12	-2.98	-2.96	-8.86	14.71
9	1	EOC: EOC: Other PT Losses	-1.40	-10.60	-10.63	-2.76	-2.74	-7.81	12.46
9	2	EOC: EOC: Other PT Losses	-1.40	-9.11	-9.13	-2.54	-2.52	-6.77	10.21
10	0	EOC: EOC: Other PT Losses	-1.40	-9.11	-9.13	-2.54	-2.52	-6.77	10.21
10	1	EOC: EOC: Other PT Losses	-1.40	-7.61	-7.64	-2.32	-2.29	-5.73	7.96
10	2	EOC: EOC: Other PT Losses	-1.40	-6.11	-6.14	-2.11	-2.07	-4.69	5.71
11	0	EOC: EOC: Other PT Losses	-1.40	-6.11	-6.14	-2.11	-2.07	-4.69	5.71
11	1	EOC: EOC: Other PT Losses	-1.40	-5.91	-5.94	-2.08	-2.04	-4.55	5.41
11	2	EOC: EOC: Other PT Losses	-1.40	-5.71	-5.74	-2.05	-2.01	-4.41	5.10
12	0	EOC: EOC: Other PT Losses	-1.46	-7.92	-7.95	-2.42	-2.39	-5.97	8.27
12	1	EOC: EOC: Other PT Losses	-1.46	-6.94	-6.97	-2.28	-2.25	-5.28	6.79
12	2	EOC: EOC: Other PT Losses	-1.46	-5.95	-5.98	-2.14	-2.10	-4.60	5.31
13	0	EOC: EOC: Other PT Losses	-2.98	-6.91	-6.95	-3.58	-3.54	-5.73	2.95
13	1	EOC: EOC: Other PT Losses	-2.98	-7.00	-7.03	-3.59	-3.56	-5.79	3.08
13	2	EOC: EOC: Other PT Losses	-2.98	-7.09	-7.12	-3.60	-3.57	-5.85	3.21
14	0	EOC: EOC: Other PT Losses	-2.98	-7.09	-7.12	-3.60	-3.57	-5.85	3.21
14	1	EOC: EOC: Other PT Losses	-2.98	-7.36	-7.40	-3.64	-3.61	-6.04	3.63
14	2	EOC: EOC: Other PT Losses	-2.98	-7.63	-7.68	-3.69	-3.65	-6.24	4.04
15	0	EOC: EOC: Other PT Losses	-2.98	-7.63	-7.68	-3.69	-3.65	-6.24	4.04
15	1	EOC: EOC: Other PT Losses	-2.98	-7.91	-7.95	-3.73	-3.68	-6.43	4.45
15	2	EOC: EOC: Other PT Losses	-2.98	-8.18	-8.23	-3.77	-3.72	-6.62	4.87
16	0	EOC: EOC: Other PT Losses	-2.98	-8.18	-8.23	-3.77	-3.72	-6.62	4.87
16	1	EOC: EOC: Other PT Losses	-2.98	-8.21	-8.26	-3.78	-3.73	-6.64	4.92
16	2	EOC: EOC: Other PT Losses	-2.98	-8.24	-8.29	-3.78	-3.73	-6.66	4.96

MEMBER STRESSES

DECK & CANOPY MEMBERS
EOC

(-) compression

			CREEP (CR)						
Member	Station	Result Case	(P/A) @ Centroid (kips/ft²)	Normal Stress @ Point 1 (kips/ft²)	Normal Stress @ Point 2 (kips/ft²)	Normal Stress @ Point 3 (kips/ft²)	Normal Stress @ Point 4 (kips/ft²)	Normal Stress @ Point 5 (kips/ft²)	Normal Stress @ Point 6 (kips/ft²)
17	0	EOC: EOC: Other PT Losses	-3.16	-8.91	-8.96	-4.03	-3.98	-7.18	5.53
17	1	EOC: EOC: Other PT Losses	-3.16	-8.42	-8.47	-3.96	-3.91	-6.84	4.80
17	2	EOC: EOC: Other PT Losses	-3.16	-7.94	-7.99	-3.88	-3.83	-6.50	4.07
18	0	EOC: EOC: Other PT Losses	-3.75	-8.47	-8.52	-4.47	-4.42	-7.05	3.40
18	1	EOC: EOC: Other PT Losses	-3.75	-8.49	-8.54	-4.47	-4.42	-7.06	3.42
18	2	EOC: EOC: Other PT Losses	-3.75	-8.50	-8.55	-4.47	-4.42	-7.07	3.43
19	0	EOC: EOC: Other PT Losses	-3.75	-8.50	-8.55	-4.47	-4.42	-7.07	3.43
19	1	EOC: EOC: Other PT Losses	-3.75	-8.55	-8.61	-4.48	-4.43	-7.11	3.52
19	2	EOC: EOC: Other PT Losses	-3.75	-8.61	-8.67	-4.49	-4.43	-7.15	3.60
20	0	EOC: EOC: Other PT Losses	-3.75	-8.61	-8.67	-4.49	-4.43	-7.15	3.60
20	1	EOC: EOC: Other PT Losses	-3.75	-8.66	-8.72	-4.50	-4.44	-7.19	3.69
20	2	EOC: EOC: Other PT Losses	-3.75	-8.71	-8.78	-4.51	-4.45	-7.23	3.77
21	0	EOC: EOC: Other PT Losses	-3.75	-8.71	-8.78	-4.51	-4.45	-7.23	3.77
21	1	EOC: EOC: Other PT Losses	-3.75	-8.72	-8.79	-4.51	-4.45	-7.24	3.79
21	2	EOC: EOC: Other PT Losses	-3.75	-8.73	-8.80	-4.52	-4.45	-7.24	3.80
22	0	EOC: EOC: Other PT Losses	-3.34	-8.34	-8.40	-4.11	-4.04	-6.84	4.23
22	1	EOC: EOC: Other PT Losses	-3.34	-8.84	-8.91	-4.18	-4.11	-7.19	5.00
22	2	EOC: EOC: Other PT Losses	-3.34	-9.35	-9.42	-4.26	-4.19	-7.55	5.76
23	0	EOC: EOC: Other PT Losses	-2.96	-8.31	-8.38	-3.78	-3.71	-6.71	5.14
23	1	EOC: EOC: Other PT Losses	-2.96	-8.30	-8.36	-3.78	-3.71	-6.70	5.11
23	2	EOC: EOC: Other PT Losses	-2.96	-8.28	-8.35	-3.78	-3.71	-6.69	5.09
24	0	EOC: EOC: Other PT Losses	-2.96	-8.28	-8.35	-3.78	-3.71	-6.69	5.09
24	1	EOC: EOC: Other PT Losses	-2.96	-8.16	-8.23	-3.76	-3.69	-6.60	4.91
24	2	EOC: EOC: Other PT Losses	-2.96	-8.04	-8.12	-3.75	-3.67	-6.52	4.74
25	0	EOC: EOC: Other PT Losses	-2.96	-8.04	-8.12	-3.75	-3.67	-6.52	4.74
25	1	EOC: EOC: Other PT Losses	-2.96	-7.92	-8.00	-3.73	-3.65	-6.44	4.56
25	2	EOC: EOC: Other PT Losses	-2.96	-7.80	-7.89	-3.72	-3.63	-6.36	4.39
26	0	EOC: EOC: Other PT Losses	-2.96	-7.80	-7.89	-3.72	-3.63	-6.36	4.39
26	1	EOC: EOC: Other PT Losses	-2.96	-7.77	-7.86	-3.71	-3.63	-6.34	4.34
26	2	EOC: EOC: Other PT Losses	-2.96	-7.74	-7.83	-3.71	-3.62	-6.32	4.30
29	0	EOC: EOC: Other PT Losses	-2.00	-8.82	-8.90	-3.04	-2.96	-6.77	8.32
29	1	EOC: EOC: Other PT Losses	-2.00	-8.61	-8.69	-3.01	-2.93	-6.63	8.01
29	2	EOC: EOC: Other PT Losses	-2.00	-8.41	-8.48	-2.98	-2.90	-6.48	7.69
30	0	EOC: EOC: Other PT Losses	-2.00	-8.41	-8.48	-2.98	-2.90	-6.48	7.69
30	1	EOC: EOC: Other PT Losses	-2.00	-7.60	-7.67	-2.86	-2.79	-5.92	6.48
30	2	EOC: EOC: Other PT Losses	-2.00	-6.80	-6.86	-2.73	-2.67	-5.36	5.27
31	0	EOC: EOC: Other PT Losses	-2.00	-6.80	-6.86	-2.73	-2.67	-5.36	5.27
31	1	EOC: EOC: Other PT Losses	-2.00	-6.00	-6.05	-2.61	-2.56	-4.80	4.06
31	2	EOC: EOC: Other PT Losses	-2.00	-5.19	-5.24	-2.49	-2.44	-4.24	2.84
32	0	EOC: EOC: Other PT Losses	-2.00	-5.19	-5.24	-2.49	-2.44	-4.24	2.84
32	1	EOC: EOC: Other PT Losses	-2.00	-5.07	-5.12	-2.47	-2.43	-4.16	2.67
32	2	EOC: EOC: Other PT Losses	-2.00	-4.96	-5.00	-2.46	-2.41	-4.07	2.49
33	0	EOC: EOC: Other PT Losses	-2.33	-5.10	-5.15	-2.76	-2.72	-4.27	1.87
33	1	EOC: EOC: Other PT Losses	-2.33	-4.86	-4.91	-2.73	-2.68	-4.11	1.51
33	2	EOC: EOC: Other PT Losses	-2.33	-4.62	-4.67	-2.69	-2.65	-3.94	1.15
34	0	EOC: EOC: Other PT Losses	-2.31	-4.08	-4.12	-2.59	-2.55	-3.55	0.39
34	1	EOC: EOC: Other PT Losses	-2.31	-3.84	-3.88	-2.56	-2.51	-3.39	0.03
34	2	EOC: EOC: Other PT Losses	-2.31	-3.60	-3.65	-2.52	-2.48	-3.22	-0.32

MEMBER STRESSES

DECK & CANOPY MEMBERS
EOC

(-) compression

			CREEP (CR)						
Member	Station	Result Case	(P/A) @ Centroid (kips/ft²)	Normal Stress @ Point 1 (kips/ft²)	Normal Stress @ Point 2 (kips/ft²)	Normal Stress @ Point 3 (kips/ft²)	Normal Stress @ Point 4 (kips/ft²)	Normal Stress @ Point 5 (kips/ft²)	Normal Stress @ Point 6 (kips/ft²)
35	0	EOC: EOC: Other PT Losses	-2.31	-3.60	-3.65	-2.52	-2.48	-3.22	-0.32
35	1	EOC: EOC: Other PT Losses	-2.31	-2.87	-2.91	-2.41	-2.37	-2.71	-1.43
35	2	EOC: EOC: Other PT Losses	-2.31	-2.13	-2.17	-2.30	-2.26	-2.20	-2.54
36	0	EOC: EOC: Other PT Losses	-2.31	-2.13	-2.17	-2.30	-2.26	-2.20	-2.54
36	1	EOC: EOC: Other PT Losses	-2.31	-1.40	-1.43	-2.19	-2.16	-1.69	-3.65
36	2	EOC: EOC: Other PT Losses	-2.31	-0.66	-0.70	-2.09	-2.05	-1.17	-4.75
37	0	EOC: EOC: Other PT Losses	-2.31	-0.66	-0.70	-2.09	-2.05	-1.17	-4.75
37	1	EOC: EOC: Other PT Losses	-2.31	-0.28	-0.31	-2.03	-2.00	-0.91	-5.33
37	2	EOC: EOC: Other PT Losses	-2.31	0.10	0.07	-1.97	-1.94	-0.64	-5.90
38	0	EOC: EOC: Other PT Losses	-1.64	0.87	0.84	-1.29	-1.26	0.10	-5.40
38	1	EOC: EOC: Other PT Losses	-1.64	0.56	0.53	-1.34	-1.30	-0.12	-4.93
38	2	EOC: EOC: Other PT Losses	-1.64	0.25	0.22	-1.38	-1.35	-0.33	-4.46
39	0	EOC: EOC: Other PT Losses	-1.69	1.42	1.39	-1.25	-1.22	0.47	-6.34
39	1	EOC: EOC: Other PT Losses	-1.69	1.14	1.11	-1.29	-1.26	0.27	-5.92
39	2	EOC: EOC: Other PT Losses	-1.69	0.86	0.83	-1.33	-1.30	0.07	-5.49
40	0	EOC: EOC: Other PT Losses	-1.69	0.86	0.83	-1.33	-1.30	0.07	-5.49
40	1	EOC: EOC: Other PT Losses	-1.69	0.02	-0.01	-1.46	-1.43	-0.51	-4.23
40	2	EOC: EOC: Other PT Losses	-1.69	-0.82	-0.85	-1.58	-1.55	-1.09	-2.97
41	0	EOC: EOC: Other PT Losses	-1.69	-0.82	-0.85	-1.58	-1.55	-1.09	-2.97
41	1	EOC: EOC: Other PT Losses	-1.69	-1.66	-1.69	-1.70	-1.67	-1.68	-1.71
41	2	EOC: EOC: Other PT Losses	-1.69	-2.50	-2.53	-1.82	-1.80	-2.26	-0.45
42	0	EOC: EOC: Other PT Losses	-1.69	-2.50	-2.53	-1.82	-1.80	-2.26	-0.45
42	1	EOC: EOC: Other PT Losses	-1.69	-3.02	-3.04	-1.90	-1.87	-2.62	0.33
42	2	EOC: EOC: Other PT Losses	-1.69	-3.54	-3.56	-1.97	-1.95	-2.99	1.12
43	0	EOC: EOC: Other PT Losses	-0.51	-1.73	-1.75	-0.70	-0.68	-1.36	1.34
43	1	EOC: EOC: Other PT Losses	-0.51	-2.33	-2.35	-0.79	-0.76	-1.78	2.25
43	2	EOC: EOC: Other PT Losses	-0.51	-2.93	-2.95	-0.87	-0.85	-2.20	3.15
44	0	EOC: EOC: Other PT Losses	-0.76	-1.03	-1.05	-0.81	-0.79	-0.95	-0.35
44	1	EOC: EOC: Other PT Losses	-0.76	-1.35	-1.37	-0.86	-0.84	-1.18	0.15
44	2	EOC: EOC: Other PT Losses	-0.76	-1.68	-1.70	-0.91	-0.89	-1.41	0.64
45	0	EOC: EOC: Other PT Losses	-0.76	-1.68	-1.70	-0.91	-0.89	-1.41	0.64
45	1	EOC: EOC: Other PT Losses	-0.76	-2.60	-2.61	-1.04	-1.02	-2.04	2.01
45	2	EOC: EOC: Other PT Losses	-0.76	-3.51	-3.53	-1.17	-1.16	-2.68	3.39
46	0	EOC: EOC: Other PT Losses	-0.76	-3.51	-3.53	-1.17	-1.16	-2.68	3.39
46	1	EOC: EOC: Other PT Losses	-0.76	-4.43	-4.44	-1.31	-1.29	-3.32	4.76
46	2	EOC: EOC: Other PT Losses	-0.76	-5.34	-5.35	-1.44	-1.42	-3.95	6.13
47	0	EOC: EOC: Other PT Losses	-0.76	-5.34	-5.35	-1.44	-1.42	-3.95	6.13
47	1	EOC: EOC: Other PT Losses	-0.76	-5.99	-6.00	-1.53	-1.52	-4.41	7.11
47	2	EOC: EOC: Other PT Losses	-0.76	-6.64	-6.65	-1.63	-1.62	-4.86	8.09
48	0	EOC: EOC: Other PT Losses	0.29	-5.05	-5.06	-0.50	-0.49	-3.43	8.33
48	1	EOC: EOC: Other PT Losses	0.29	-5.56	-5.57	-0.57	-0.56	-3.79	9.10
48	2	EOC: EOC: Other PT Losses	0.29	-6.07	-6.08	-0.65	-0.64	-4.14	9.86
49	0	EOC: EOC: Other PT Losses	-0.10	-5.06	-5.08	-0.84	-0.83	-3.56	7.36
49	1	EOC: EOC: Other PT Losses	-0.10	-4.86	-4.87	-0.81	-0.80	-3.42	7.05
49	2	EOC: EOC: Other PT Losses	-0.10	-4.66	-4.67	-0.78	-0.77	-3.28	6.75
50	0	EOC: EOC: Other PT Losses	-0.10	-4.66	-4.67	-0.78	-0.77	-3.28	6.75
50	1	EOC: EOC: Other PT Losses	-0.10	-4.12	-4.13	-0.70	-0.69	-2.90	5.94
50	2	EOC: EOC: Other PT Losses	-0.10	-3.58	-3.59	-0.62	-0.61	-2.53	5.13

MEMBER STRESSES

DECK & CANOPY MEMBERS
EOC

(-) compression

			CREEP (CR)						
Member	Station	Result Case	(P/A) @ Centroid (kips/ft²)	Normal Stress @ Point 1 (kips/ft²)	Normal Stress @ Point 2 (kips/ft²)	Normal Stress @ Point 3 (kips/ft²)	Normal Stress @ Point 4 (kips/ft²)	Normal Stress @ Point 5 (kips/ft²)	Normal Stress @ Point 6 (kips/ft²)
51	0	EOC: EOC: Other PT Losses	-0.10	-3.58	-3.59	-0.62	-0.61	-2.53	5.13
51	1	EOC: EOC: Other PT Losses	-0.10	-3.05	-3.05	-0.54	-0.53	-2.15	4.32
51	2	EOC: EOC: Other PT Losses	-0.10	-2.51	-2.51	-0.46	-0.46	-1.78	3.51
52	0	EOC: EOC: Other PT Losses	-0.10	-2.51	-2.51	-0.46	-0.46	-1.78	3.51
52	1	EOC: EOC: Other PT Losses	-0.10	-2.08	-2.08	-0.40	-0.39	-1.48	2.87
52	2	EOC: EOC: Other PT Losses	-0.10	-1.66	-1.66	-0.33	-0.33	-1.19	2.23
60	0	EOC: EOC: Other PT Losses	0.00	0.00	0.00	0.00	0.00	0.00	0.00
60	1	EOC: EOC: Other PT Losses	0.00	0.00	0.00	0.00	0.00	0.00	0.00
60	2	EOC: EOC: Other PT Losses	0.00	0.00	0.00	0.00	0.00	0.00	0.00
101	0	EOC: EOC: Other PT Losses	-4.67	146.41	146.41	-170.53	-170.53	112.74	-35.76
101	1	EOC: EOC: Other PT Losses	-4.67	139.12	139.12	-162.53	-162.53	107.08	-34.26
101	2	EOC: EOC: Other PT Losses	-4.67	131.84	131.84	-154.53	-154.53	101.42	-32.77
102	0	EOC: EOC: Other PT Losses	-4.67	131.84	131.84	-154.53	-154.53	101.42	-32.77
102	1	EOC: EOC: Other PT Losses	-4.67	88.28	88.28	-106.71	-106.71	67.57	-23.80
102	2	EOC: EOC: Other PT Losses	-4.67	44.73	44.72	-58.89	-58.89	33.72	-14.83
103	0	EOC: EOC: Other PT Losses	-4.67	44.73	44.72	-58.89	-58.89	33.72	-14.83
103	1	EOC: EOC: Other PT Losses	-4.67	1.76	1.75	-11.71	-11.71	0.32	-5.99
103	2	EOC: EOC: Other PT Losses	-4.67	-41.21	-41.22	35.46	35.46	-33.07	2.86
104	0	EOC: EOC: Other PT Losses	-4.66	-41.21	-41.22	35.46	35.46	-33.07	2.86
104	1	EOC: EOC: Other PT Losses	-4.66	-53.13	-53.14	48.55	48.55	-42.33	5.31
104	2	EOC: EOC: Other PT Losses	-4.66	-65.05	-65.06	61.64	61.64	-51.60	7.77
106	0	EOC: EOC: Other PT Losses	5.70	-47.47	-47.48	64.07	64.08	-35.63	16.64
106	1	EOC: EOC: Other PT Losses	5.70	-45.01	-45.01	61.37	61.37	-33.71	16.13
106	2	EOC: EOC: Other PT Losses	5.70	-42.54	-42.54	58.66	58.66	-31.79	15.63
107	0	EOC: EOC: Other PT Losses	5.70	-42.54	-42.54	58.66	58.66	-31.79	15.63
107	1	EOC: EOC: Other PT Losses	5.70	-28.61	-28.61	43.36	43.36	-20.97	12.76
107	2	EOC: EOC: Other PT Losses	5.70	-14.68	-14.68	28.07	28.07	-10.14	9.89
108	0	EOC: EOC: Other PT Losses	5.70	-14.68	-14.68	28.07	28.07	-10.14	9.89
108	1	EOC: EOC: Other PT Losses	5.70	-1.27	-1.27	13.34	13.34	0.28	7.13
108	2	EOC: EOC: Other PT Losses	5.70	12.14	12.14	-1.38	-1.38	10.71	4.37
109	0	EOC: EOC: Other PT Losses	5.70	12.14	12.14	-1.38	-1.38	10.71	4.37
109	1	EOC: EOC: Other PT Losses	5.70	16.89	16.89	-6.59	-6.59	14.39	3.39
109	2	EOC: EOC: Other PT Losses	5.70	21.63	21.63	-11.80	-11.80	18.08	2.42
111	0	EOC: EOC: Other PT Losses	9.57	2.97	2.96	16.81	16.81	4.44	10.92
111	1	EOC: EOC: Other PT Losses	9.57	3.11	3.11	16.66	16.66	4.55	10.90
111	2	EOC: EOC: Other PT Losses	9.57	3.25	3.25	16.50	16.50	4.66	10.87
112	0	EOC: EOC: Other PT Losses	9.57	3.25	3.25	16.50	16.50	4.66	10.87
112	1	EOC: EOC: Other PT Losses	9.57	4.51	4.51	15.12	15.12	5.64	10.61
112	2	EOC: EOC: Other PT Losses	9.57	5.77	5.77	13.73	13.73	6.62	10.35
113	0	EOC: EOC: Other PT Losses	9.57	5.77	5.77	13.73	13.73	6.62	10.35
113	1	EOC: EOC: Other PT Losses	9.57	6.90	6.90	12.49	12.49	7.49	10.11
113	2	EOC: EOC: Other PT Losses	9.57	8.03	8.03	11.25	11.25	8.37	9.88
114	0	EOC: EOC: Other PT Losses	9.57	8.03	8.03	11.25	11.25	8.37	9.88
114	1	EOC: EOC: Other PT Losses	9.57	8.41	8.41	10.83	10.83	8.67	9.80
114	2	EOC: EOC: Other PT Losses	9.57	8.79	8.79	10.42	10.41	8.97	9.73
116	0	EOC: EOC: Other PT Losses	12.15	4.16	4.16	20.93	20.92	5.94	13.80
116	1	EOC: EOC: Other PT Losses	12.15	4.16	4.16	20.92	20.92	5.94	13.79
116	2	EOC: EOC: Other PT Losses	12.15	4.17	4.17	20.91	20.91	5.95	13.79

MEMBER STRESSES

DECK & CANOPY MEMBERS
EOC

(-) compression

			CREEP (CR)						
Member	Station	Result Case	(P/A) @ Centroid (kips/ft²)	Normal Stress @ Point 1 (kips/ft²)	Normal Stress @ Point 2 (kips/ft²)	Normal Stress @ Point 3 (kips/ft²)	Normal Stress @ Point 4 (kips/ft²)	Normal Stress @ Point 5 (kips/ft²)	Normal Stress @ Point 6 (kips/ft²)
117	0	EOC: EOC: Other PT Losses	12.15	4.17	4.17	20.91	20.91	5.95	13.79
117	1	EOC: EOC: Other PT Losses	12.15	4.68	4.68	20.36	20.36	6.34	13.69
117	2	EOC: EOC: Other PT Losses	12.15	5.18	5.19	19.80	19.80	6.74	13.58
118	0	EOC: EOC: Other PT Losses	12.15	5.18	5.19	19.80	19.80	6.74	13.58
118	1	EOC: EOC: Other PT Losses	12.15	5.58	5.58	19.37	19.36	7.04	13.50
118	2	EOC: EOC: Other PT Losses	12.15	5.97	5.98	18.93	18.93	7.35	13.42
119	0	EOC: EOC: Other PT Losses	12.15	5.97	5.98	18.93	18.93	7.35	13.42
119	1	EOC: EOC: Other PT Losses	12.15	6.11	6.12	18.78	18.78	7.46	13.39
119	2	EOC: EOC: Other PT Losses	12.15	6.25	6.25	18.63	18.63	7.56	13.37
121	0	EOC: EOC: Other PT Losses	9.38	5.61	5.61	13.51	13.51	6.45	10.15
121	1	EOC: EOC: Other PT Losses	9.38	5.51	5.51	13.62	13.62	6.37	10.17
121	2	EOC: EOC: Other PT Losses	9.38	5.41	5.42	13.73	13.73	6.30	10.19
122	0	EOC: EOC: Other PT Losses	9.38	5.41	5.42	13.73	13.73	6.30	10.19
122	1	EOC: EOC: Other PT Losses	9.38	4.53	4.54	14.69	14.69	5.62	10.37
122	2	EOC: EOC: Other PT Losses	9.38	3.66	3.67	15.65	15.65	4.94	10.55
123	0	EOC: EOC: Other PT Losses	9.38	3.66	3.67	15.65	15.65	4.94	10.55
123	1	EOC: EOC: Other PT Losses	9.38	2.78	2.80	16.61	16.60	4.26	10.73
123	2	EOC: EOC: Other PT Losses	9.38	1.91	1.92	17.57	17.56	3.58	10.91
124	0	EOC: EOC: Other PT Losses	9.38	1.91	1.92	17.57	17.56	3.58	10.91
124	1	EOC: EOC: Other PT Losses	9.38	1.82	1.83	17.67	17.66	3.51	10.93
124	2	EOC: EOC: Other PT Losses	9.38	1.74	1.75	17.77	17.75	3.44	10.95
126	0	EOC: EOC: Other PT Losses	-3.32	13.75	13.76	-22.07	-22.08	9.95	-6.84
126	1	EOC: EOC: Other PT Losses	-3.32	10.90	10.91	-18.94	-18.95	7.74	-6.25
126	2	EOC: EOC: Other PT Losses	-3.32	8.05	8.07	-15.82	-15.83	5.52	-5.67
127	0	EOC: EOC: Other PT Losses	-3.32	8.05	8.07	-15.82	-15.83	5.52	-5.67
127	1	EOC: EOC: Other PT Losses	-3.32	-2.55	-2.53	-4.18	-4.19	-2.71	-3.48
127	2	EOC: EOC: Other PT Losses	-3.32	-13.15	-13.13	7.46	7.44	-10.95	-1.30
128	0	EOC: EOC: Other PT Losses	-3.32	-13.15	-13.13	7.46	7.44	-10.95	-1.30
128	1	EOC: EOC: Other PT Losses	-3.32	-23.88	-23.86	19.24	19.22	-19.29	0.91
133	0	EOC: EOC: Other PT Losses	-5.39	-34.76	-34.74	26.85	26.83	-28.21	0.65
133	1	EOC: EOC: Other PT Losses	-5.39	-24.63	-24.61	15.73	15.71	-20.34	-1.43
133	2	EOC: EOC: Other PT Losses	-5.39	-14.51	-14.49	4.62	4.60	-12.47	-3.52
134	0	EOC: EOC: Other PT Losses	-5.39	-14.51	-14.49	4.62	4.60	-12.47	-3.52
134	1	EOC: EOC: Other PT Losses	-5.39	-4.49	-4.47	-6.38	-6.40	-4.68	-5.58
134	2	EOC: EOC: Other PT Losses	-5.39	5.53	5.54	-17.38	-17.40	3.10	-7.64
135	0	EOC: EOC: Other PT Losses	-5.39	5.53	5.54	-17.38	-17.40	3.10	-7.64
135	1	EOC: EOC: Other PT Losses	-5.39	8.23	8.24	-20.35	-20.36	5.20	-8.20
135	2	EOC: EOC: Other PT Losses	-5.39	10.93	10.95	-23.31	-23.33	7.30	-8.75
137	0	EOC: EOC: Other PT Losses	6.03	3.38	3.40	8.93	8.92	3.98	6.57
137	1	EOC: EOC: Other PT Losses	6.03	3.98	3.99	8.27	8.26	4.44	6.45
137	2	EOC: EOC: Other PT Losses	6.03	4.58	4.59	7.62	7.61	4.91	6.32
138	0	EOC: EOC: Other PT Losses	6.03	4.58	4.59	7.62	7.61	4.91	6.32
138	1	EOC: EOC: Other PT Losses	6.03	6.31	6.32	5.72	5.71	6.25	5.97
138	2	EOC: EOC: Other PT Losses	6.03	8.04	8.05	3.82	3.81	7.59	5.61
139	0	EOC: EOC: Other PT Losses	6.03	8.04	8.05	3.82	3.81	7.59	5.61
139	1	EOC: EOC: Other PT Losses	6.03	9.94	9.95	1.73	1.72	9.07	5.22
139	2	EOC: EOC: Other PT Losses	6.03	11.85	11.86	-0.36	-0.37	10.55	4.83

MEMBER STRESSES

DECK & CANOPY MEMBERS
EOC

(-) compression

			CREEP (CR)						
Member	Station	Result Case	(P/A) @ Centroid (kips/ft²)	Normal Stress @ Point 1 (kips/ft²)	Normal Stress @ Point 2 (kips/ft²)	Normal Stress @ Point 3 (kips/ft²)	Normal Stress @ Point 4 (kips/ft²)	Normal Stress @ Point 5 (kips/ft²)	Normal Stress @ Point 6 (kips/ft²)
140	0	EOC: EOC: Other PT Losses	6.03	11.85	11.86	-0.36	-0.37	10.55	4.83
140	1	EOC: EOC: Other PT Losses	6.03	12.30	12.31	-0.86	-0.87	10.91	4.74
140	2	EOC: EOC: Other PT Losses	6.03	12.75	12.76	-1.36	-1.37	11.26	4.64
142	0	EOC: EOC: Other PT Losses	7.22	16.16	16.17	-2.60	-2.61	14.17	5.37
142	1	EOC: EOC: Other PT Losses	7.22	15.18	15.19	-1.53	-1.54	13.41	5.58
142	2	EOC: EOC: Other PT Losses	7.22	14.21	14.22	-0.46	-0.47	12.65	5.78
143	0	EOC: EOC: Other PT Losses	7.22	14.21	14.22	-0.46	-0.47	12.65	5.78
143	1	EOC: EOC: Other PT Losses	7.22	12.16	12.17	1.79	1.78	11.06	6.20
143	2	EOC: EOC: Other PT Losses	7.22	10.12	10.13	4.03	4.02	9.47	6.62
144	0	EOC: EOC: Other PT Losses	7.22	10.12	10.13	4.03	4.02	9.47	6.62
144	1	EOC: EOC: Other PT Losses	7.22	7.98	7.99	6.38	6.37	7.81	7.06
144	2	EOC: EOC: Other PT Losses	7.22	5.84	5.84	8.73	8.73	6.15	7.50
145	0	EOC: EOC: Other PT Losses	7.22	5.84	5.84	8.73	8.72	6.15	7.50
145	1	EOC: EOC: Other PT Losses	7.22	5.18	5.19	9.45	9.44	5.64	7.63
145	2	EOC: EOC: Other PT Losses	7.22	4.53	4.54	10.17	10.16	5.13	7.77
147	0	EOC: EOC: Other PT Losses	5.87	16.33	16.34	-5.62	-5.62	14.00	3.72
147	1	EOC: EOC: Other PT Losses	5.87	14.58	14.58	-3.69	-3.69	12.64	4.08
147	2	EOC: EOC: Other PT Losses	5.87	12.82	12.83	-1.76	-1.76	11.27	4.44
148	0	EOC: EOC: Other PT Losses	5.87	12.82	12.83	-1.76	-1.76	11.27	4.44
148	1	EOC: EOC: Other PT Losses	5.87	9.63	9.63	1.75	1.74	8.79	5.10
148	2	EOC: EOC: Other PT Losses	5.87	6.43	6.44	5.26	5.25	6.31	5.76
149	0	EOC: EOC: Other PT Losses	5.87	6.43	6.44	5.26	5.25	6.31	5.76
149	1	EOC: EOC: Other PT Losses	5.87	3.03	3.04	8.99	8.99	3.67	6.46
149	2	EOC: EOC: Other PT Losses	5.87	-0.37	-0.37	12.72	12.72	1.02	7.16
150	0	EOC: EOC: Other PT Losses	5.87	-0.37	-0.37	12.72	12.72	1.02	7.16
150	1	EOC: EOC: Other PT Losses	5.87	-1.41	-1.41	13.87	13.87	0.21	7.37
150	2	EOC: EOC: Other PT Losses	5.87	-2.46	-2.45	15.02	15.01	-0.60	7.59
152	0	EOC: EOC: Other PT Losses	3.25	13.89	13.89	-8.44	-8.44	11.52	1.06
152	1	EOC: EOC: Other PT Losses	3.25	10.84	10.84	-5.09	-5.09	9.15	1.68
152	2	EOC: EOC: Other PT Losses	3.25	7.79	7.79	-1.74	-1.74	6.78	2.31
153	0	EOC: EOC: Other PT Losses	3.25	7.79	7.79	-1.74	-1.74	6.78	2.31
153	1	EOC: EOC: Other PT Losses	3.25	2.81	2.81	3.73	3.72	2.91	3.34
153	2	EOC: EOC: Other PT Losses	3.25	-2.17	-2.17	9.19	9.19	-0.96	4.36
154	0	EOC: EOC: Other PT Losses	3.25	-2.17	-2.17	9.19	9.19	-0.96	4.36
154	1	EOC: EOC: Other PT Losses	3.25	-7.58	-7.58	15.14	15.13	-5.17	5.48
154	2	EOC: EOC: Other PT Losses	3.25	-13.00	-12.99	21.08	21.08	-9.38	6.59
155	0	EOC: EOC: Other PT Losses	3.25	-13.00	-13.00	21.08	21.08	-9.38	6.59
155	1	EOC: EOC: Other PT Losses	3.25	-14.68	-14.68	22.93	22.93	-10.69	6.94
155	2	EOC: EOC: Other PT Losses	3.25	-16.37	-16.37	24.78	24.78	-12.00	7.28
157	0	EOC: EOC: Other PT Losses	-0.01	-9.04	-9.04	9.91	9.91	-7.03	1.85
157	1	EOC: EOC: Other PT Losses	-0.01	-8.29	-8.29	9.09	9.09	-6.44	1.70
157	2	EOC: EOC: Other PT Losses	-0.01	-7.54	-7.54	8.27	8.27	-5.86	1.54
158	0	EOC: EOC: Other PT Losses	-0.01	-7.54	-7.54	8.27	8.27	-5.86	1.54
158	1	EOC: EOC: Other PT Losses	-0.01	-5.15	-5.15	5.64	5.64	-4.00	1.05
158	2	EOC: EOC: Other PT Losses	-0.01	-2.76	-2.76	3.01	3.01	-2.15	0.56
159	0	EOC: EOC: Other PT Losses	-0.01	-2.76	-2.76	3.01	3.01	-2.15	0.56
159	1	EOC: EOC: Other PT Losses	-0.01	-0.33	-0.33	0.35	0.35	-0.26	0.06
159	2	EOC: EOC: Other PT Losses	-0.01	2.09	2.09	-2.31	-2.31	1.62	-0.44

MEMBER STRESSES

DECK & CANOPY MEMBERS
EOC

(-) compression

			SHRINKAGE (SH)						
Member	Station	Result Case	(P/A) @ Centroid (kips/ft²)	Normal Stress @ Point 1 (kips/ft²)	Normal Stress @ Point 2 (kips/ft²)	Normal Stress @ Point 3 (kips/ft²)	Normal Stress @ Point 4 (kips/ft²)	Normal Stress @ Point 5 (kips/ft²)	Normal Stress @ Point 6 (kips/ft²)
1	0	EOC: EOC: Other PT Losses	0.01	0.67	0.67	0.11	0.11	0.47	-0.97
1	1	EOC: EOC: Other PT Losses	0.01	0.67	0.67	0.11	0.11	0.47	-0.97
1	2	EOC: EOC: Other PT Losses	0.01	0.67	0.67	0.11	0.11	0.47	-0.98
2	0	EOC: EOC: Other PT Losses	0.11	-0.41	-0.41	0.03	0.03	-0.26	0.89
2	1	EOC: EOC: Other PT Losses	0.11	-0.70	-0.70	-0.01	-0.01	-0.45	1.31
2	2	EOC: EOC: Other PT Losses	0.11	-0.98	-0.98	-0.05	-0.05	-0.65	1.73
3	0	EOC: EOC: Other PT Losses	0.52	-0.27	-0.27	0.41	0.41	-0.03	1.72
3	1	EOC: EOC: Other PT Losses	0.52	-0.30	-0.30	0.40	0.40	-0.05	1.77
3	2	EOC: EOC: Other PT Losses	0.52	-0.33	-0.33	0.40	0.40	-0.07	1.81
4	0	EOC: EOC: Other PT Losses	0.52	-0.33	-0.33	0.40	0.40	-0.07	1.81
4	1	EOC: EOC: Other PT Losses	0.52	-0.40	-0.40	0.39	0.39	-0.12	1.91
4	2	EOC: EOC: Other PT Losses	0.52	-0.46	-0.46	0.38	0.38	-0.16	2.01
5	0	EOC: EOC: Other PT Losses	0.52	-0.46	-0.46	0.38	0.38	-0.16	2.01
5	1	EOC: EOC: Other PT Losses	0.52	-0.53	-0.53	0.37	0.37	-0.21	2.11
5	2	EOC: EOC: Other PT Losses	0.52	-0.60	-0.60	0.36	0.36	-0.26	2.21
6	0	EOC: EOC: Other PT Losses	0.52	-0.60	-0.60	0.36	0.36	-0.26	2.21
6	1	EOC: EOC: Other PT Losses	0.52	-0.61	-0.61	0.36	0.36	-0.26	2.22
6	2	EOC: EOC: Other PT Losses	0.52	-0.61	-0.61	0.36	0.36	-0.27	2.24
7	0	EOC: EOC: Other PT Losses	0.57	-0.33	-0.33	0.44	0.44	-0.06	1.94
7	1	EOC: EOC: Other PT Losses	0.57	-0.20	-0.20	0.46	0.46	0.04	1.73
7	2	EOC: EOC: Other PT Losses	0.57	-0.07	-0.07	0.48	0.48	0.13	1.53
8	0	EOC: EOC: Other PT Losses	0.32	-0.28	-0.28	0.23	0.23	-0.10	1.22
8	1	EOC: EOC: Other PT Losses	0.32	-0.35	-0.35	0.22	0.22	-0.15	1.33
8	2	EOC: EOC: Other PT Losses	0.32	-0.43	-0.43	0.21	0.21	-0.20	1.44
9	0	EOC: EOC: Other PT Losses	0.32	-0.43	-0.43	0.21	0.21	-0.20	1.44
9	1	EOC: EOC: Other PT Losses	0.32	-0.61	-0.61	0.18	0.18	-0.33	1.72
9	2	EOC: EOC: Other PT Losses	0.32	-0.80	-0.80	0.16	0.16	-0.46	2.00
10	0	EOC: EOC: Other PT Losses	0.32	-0.80	-0.80	0.16	0.16	-0.46	2.00
10	1	EOC: EOC: Other PT Losses	0.32	-0.98	-0.98	0.13	0.13	-0.59	2.28
10	2	EOC: EOC: Other PT Losses	0.32	-1.17	-1.17	0.10	0.10	-0.71	2.55
11	0	EOC: EOC: Other PT Losses	0.32	-1.17	-1.17	0.10	0.10	-0.71	2.55
11	1	EOC: EOC: Other PT Losses	0.32	-1.19	-1.19	0.10	0.10	-0.73	2.59
11	2	EOC: EOC: Other PT Losses	0.32	-1.22	-1.22	0.10	0.09	-0.75	2.63
12	0	EOC: EOC: Other PT Losses	0.33	-1.23	-1.23	0.10	0.10	-0.76	2.67
12	1	EOC: EOC: Other PT Losses	0.33	-0.85	-0.85	0.16	0.16	-0.49	2.11
12	2	EOC: EOC: Other PT Losses	0.33	-0.48	-0.48	0.21	0.21	-0.23	1.54
13	0	EOC: EOC: Other PT Losses	-0.24	-1.05	-1.05	-0.36	-0.36	-0.80	0.97
13	1	EOC: EOC: Other PT Losses	-0.24	-1.06	-1.05	-0.36	-0.36	-0.81	0.98
13	2	EOC: EOC: Other PT Losses	-0.24	-1.06	-1.06	-0.36	-0.36	-0.81	0.99
14	0	EOC: EOC: Other PT Losses	-0.24	-1.06	-1.06	-0.36	-0.36	-0.81	0.99
14	1	EOC: EOC: Other PT Losses	-0.24	-1.08	-1.08	-0.37	-0.37	-0.83	1.02
14	2	EOC: EOC: Other PT Losses	-0.24	-1.11	-1.11	-0.37	-0.37	-0.84	1.05
15	0	EOC: EOC: Other PT Losses	-0.24	-1.11	-1.11	-0.37	-0.37	-0.84	1.05
15	1	EOC: EOC: Other PT Losses	-0.24	-1.13	-1.13	-0.37	-0.37	-0.86	1.09
15	2	EOC: EOC: Other PT Losses	-0.24	-1.15	-1.15	-0.38	-0.38	-0.87	1.12
16	0	EOC: EOC: Other PT Losses	-0.24	-1.15	-1.15	-0.38	-0.38	-0.87	1.12
16	1	EOC: EOC: Other PT Losses	-0.24	-1.15	-1.15	-0.38	-0.38	-0.88	1.12
16	2	EOC: EOC: Other PT Losses	-0.24	-1.16	-1.15	-0.38	-0.38	-0.88	1.13

MEMBER STRESSES

DECK & CANOPY MEMBERS
EOC

(-) compression

			SHRINKAGE (SH)						
Member	Station	Result Case	(P/A) @ Centroid (kips/ft²)	Normal Stress @ Point 1 (kips/ft²)	Normal Stress @ Point 2 (kips/ft²)	Normal Stress @ Point 3 (kips/ft²)	Normal Stress @ Point 4 (kips/ft²)	Normal Stress @ Point 5 (kips/ft²)	Normal Stress @ Point 6 (kips/ft²)
17	0	EOC: EOC: Other PT Losses	-0.42	-1.46	-1.45	-0.57	-0.57	-1.14	1.15
17	1	EOC: EOC: Other PT Losses	-0.42	-0.93	-0.93	-0.49	-0.49	-0.77	0.36
17	2	EOC: EOC: Other PT Losses	-0.42	-0.40	-0.40	-0.41	-0.41	-0.41	-0.44
18	0	EOC: EOC: Other PT Losses	-1.05	-1.24	-1.24	-1.08	-1.08	-1.18	-0.75
18	1	EOC: EOC: Other PT Losses	-1.05	-1.28	-1.28	-1.08	-1.08	-1.21	-0.70
18	2	EOC: EOC: Other PT Losses	-1.05	-1.32	-1.32	-1.09	-1.09	-1.24	-0.64
19	0	EOC: EOC: Other PT Losses	-1.05	-1.32	-1.32	-1.09	-1.09	-1.24	-0.64
19	1	EOC: EOC: Other PT Losses	-1.05	-1.49	-1.49	-1.11	-1.11	-1.35	-0.39
19	2	EOC: EOC: Other PT Losses	-1.05	-1.66	-1.65	-1.14	-1.14	-1.47	-0.13
20	0	EOC: EOC: Other PT Losses	-1.05	-1.66	-1.65	-1.14	-1.14	-1.47	-0.13
20	1	EOC: EOC: Other PT Losses	-1.05	-1.82	-1.82	-1.16	-1.16	-1.59	0.12
20	2	EOC: EOC: Other PT Losses	-1.05	-1.99	-1.99	-1.18	-1.19	-1.70	0.37
21	0	EOC: EOC: Other PT Losses	-1.05	-1.99	-1.99	-1.18	-1.19	-1.70	0.37
21	1	EOC: EOC: Other PT Losses	-1.05	-2.02	-2.02	-1.19	-1.19	-1.72	0.41
21	2	EOC: EOC: Other PT Losses	-1.05	-2.05	-2.05	-1.19	-1.20	-1.74	0.46
22	0	EOC: EOC: Other PT Losses	-1.48	-2.47	-2.47	-1.62	-1.63	-2.17	0.00
22	1	EOC: EOC: Other PT Losses	-1.48	-1.93	-1.93	-1.55	-1.55	-1.79	-0.81
22	2	EOC: EOC: Other PT Losses	-1.48	-1.39	-1.39	-1.47	-1.47	-1.42	-1.62
23	0	EOC: EOC: Other PT Losses	-1.88	-2.50	-2.49	-1.97	-1.97	-2.31	-0.95
23	1	EOC: EOC: Other PT Losses	-1.88	-2.44	-2.44	-1.96	-1.96	-2.27	-1.03
23	2	EOC: EOC: Other PT Losses	-1.88	-2.38	-2.38	-1.95	-1.95	-2.23	-1.12
24	0	EOC: EOC: Other PT Losses	-1.88	-2.38	-2.38	-1.95	-1.95	-2.23	-1.12
24	1	EOC: EOC: Other PT Losses	-1.88	-1.99	-1.99	-1.89	-1.89	-1.96	-1.71
24	2	EOC: EOC: Other PT Losses	-1.88	-1.60	-1.60	-1.84	-1.84	-1.69	-2.29
25	0	EOC: EOC: Other PT Losses	-1.88	-1.60	-1.60	-1.84	-1.84	-1.69	-2.29
25	1	EOC: EOC: Other PT Losses	-1.88	-1.21	-1.21	-1.78	-1.78	-1.41	-2.87
25	2	EOC: EOC: Other PT Losses	-1.88	-0.83	-0.82	-1.72	-1.72	-1.14	-3.46
26	0	EOC: EOC: Other PT Losses	-1.88	-0.83	-0.82	-1.72	-1.72	-1.14	-3.46
26	1	EOC: EOC: Other PT Losses	-1.88	-0.73	-0.72	-1.71	-1.71	-1.07	-3.61
26	2	EOC: EOC: Other PT Losses	-1.88	-0.63	-0.62	-1.69	-1.70	-1.01	-3.76
29	0	EOC: EOC: Other PT Losses	-1.39	1.02	1.04	-1.03	-1.04	0.29	-5.03
29	1	EOC: EOC: Other PT Losses	-1.39	0.79	0.80	-1.07	-1.08	0.13	-4.68
29	2	EOC: EOC: Other PT Losses	-1.39	0.55	0.56	-1.10	-1.11	-0.04	-4.32
30	0	EOC: EOC: Other PT Losses	-1.39	0.55	0.56	-1.10	-1.11	-0.04	-4.32
30	1	EOC: EOC: Other PT Losses	-1.39	-0.36	-0.35	-1.23	-1.25	-0.67	-2.95
30	2	EOC: EOC: Other PT Losses	-1.39	-1.28	-1.27	-1.37	-1.38	-1.31	-1.57
31	0	EOC: EOC: Other PT Losses	-1.39	-1.28	-1.27	-1.37	-1.38	-1.31	-1.57
31	1	EOC: EOC: Other PT Losses	-1.39	-2.19	-2.18	-1.50	-1.51	-1.94	-0.20
31	2	EOC: EOC: Other PT Losses	-1.39	-3.10	-3.09	-1.64	-1.65	-2.58	1.17
32	0	EOC: EOC: Other PT Losses	-1.39	-3.10	-3.09	-1.64	-1.65	-2.58	1.17
32	1	EOC: EOC: Other PT Losses	-1.39	-3.24	-3.23	-1.66	-1.67	-2.67	1.38
32	2	EOC: EOC: Other PT Losses	-1.39	-3.37	-3.36	-1.68	-1.68	-2.77	1.58
33	0	EOC: EOC: Other PT Losses	-0.75	-1.87	-1.87	-0.91	-0.92	-1.53	0.94
33	1	EOC: EOC: Other PT Losses	-0.75	-2.29	-2.28	-0.97	-0.98	-1.82	1.56
33	2	EOC: EOC: Other PT Losses	-0.75	-2.71	-2.70	-1.03	-1.04	-2.11	2.19
34	0	EOC: EOC: Other PT Losses	-0.73	-1.75	-1.74	-0.88	-0.89	-1.44	0.79
34	1	EOC: EOC: Other PT Losses	-0.73	-1.75	-1.74	-0.88	-0.89	-1.44	0.79
34	2	EOC: EOC: Other PT Losses	-0.73	-1.75	-1.74	-0.88	-0.89	-1.44	0.79

MEMBER STRESSES

DECK & CANOPY MEMBERS
EOC

(-) compression

			SHRINKAGE (SH)						
Member	Station	Result Case	(P/A) @ Centroid (kips/ft²)	Normal Stress @ Point 1 (kips/ft²)	Normal Stress @ Point 2 (kips/ft²)	Normal Stress @ Point 3 (kips/ft²)	Normal Stress @ Point 4 (kips/ft²)	Normal Stress @ Point 5 (kips/ft²)	Normal Stress @ Point 6 (kips/ft²)
35	0	EOC: EOC: Other PT Losses	-0.73	-1.75	-1.74	-0.88	-0.89	-1.44	0.79
35	1	EOC: EOC: Other PT Losses	-0.73	-1.75	-1.74	-0.88	-0.89	-1.44	0.79
35	2	EOC: EOC: Other PT Losses	-0.73	-1.75	-1.74	-0.88	-0.89	-1.44	0.79
36	0	EOC: EOC: Other PT Losses	-0.73	-1.75	-1.74	-0.88	-0.89	-1.44	0.79
36	1	EOC: EOC: Other PT Losses	-0.73	-1.75	-1.74	-0.88	-0.89	-1.44	0.79
36	2	EOC: EOC: Other PT Losses	-0.73	-1.75	-1.74	-0.88	-0.89	-1.44	0.79
37	0	EOC: EOC: Other PT Losses	-0.73	-1.75	-1.74	-0.88	-0.89	-1.44	0.79
37	1	EOC: EOC: Other PT Losses	-0.73	-1.75	-1.74	-0.88	-0.89	-1.44	0.79
37	2	EOC: EOC: Other PT Losses	-0.73	-1.75	-1.74	-0.88	-0.89	-1.44	0.79
38	0	EOC: EOC: Other PT Losses	-0.01	-0.57	-0.56	-0.09	-0.10	-0.40	0.82
38	1	EOC: EOC: Other PT Losses	-0.01	-0.95	-0.94	-0.15	-0.15	-0.66	1.38
38	2	EOC: EOC: Other PT Losses	-0.01	-1.32	-1.32	-0.20	-0.21	-0.92	1.95
39	0	EOC: EOC: Other PT Losses	-0.12	-0.54	-0.53	-0.17	-0.18	-0.41	0.51
39	1	EOC: EOC: Other PT Losses	-0.12	-0.64	-0.63	-0.19	-0.19	-0.48	0.66
39	2	EOC: EOC: Other PT Losses	-0.12	-0.74	-0.73	-0.20	-0.21	-0.55	0.81
40	0	EOC: EOC: Other PT Losses	-0.12	-0.74	-0.73	-0.20	-0.21	-0.55	0.81
40	1	EOC: EOC: Other PT Losses	-0.12	-1.04	-1.03	-0.25	-0.25	-0.75	1.26
40	2	EOC: EOC: Other PT Losses	-0.12	-1.33	-1.33	-0.29	-0.30	-0.96	1.71
41	0	EOC: EOC: Other PT Losses	-0.12	-1.33	-1.33	-0.29	-0.30	-0.96	1.71
41	1	EOC: EOC: Other PT Losses	-0.12	-1.63	-1.63	-0.33	-0.34	-1.17	2.16
41	2	EOC: EOC: Other PT Losses	-0.12	-1.93	-1.93	-0.38	-0.38	-1.38	2.61
42	0	EOC: EOC: Other PT Losses	-0.12	-1.93	-1.93	-0.38	-0.38	-1.38	2.61
42	1	EOC: EOC: Other PT Losses	-0.12	-2.12	-2.11	-0.41	-0.41	-1.51	2.89
42	2	EOC: EOC: Other PT Losses	-0.12	-2.30	-2.30	-0.43	-0.44	-1.64	3.17
43	0	EOC: EOC: Other PT Losses	0.46	-1.37	-1.37	0.19	0.19	-0.81	3.21
43	1	EOC: EOC: Other PT Losses	0.46	-1.66	-1.65	0.15	0.15	-1.01	3.64
43	2	EOC: EOC: Other PT Losses	0.46	-1.94	-1.94	0.11	0.11	-1.21	4.07
44	0	EOC: EOC: Other PT Losses	0.32	-1.50	-1.49	0.05	0.05	-0.94	3.04
44	1	EOC: EOC: Other PT Losses	0.32	-1.59	-1.59	0.04	0.03	-1.01	3.18
44	2	EOC: EOC: Other PT Losses	0.32	-1.69	-1.68	0.03	0.02	-1.08	3.32
45	0	EOC: EOC: Other PT Losses	0.32	-1.69	-1.68	0.03	0.02	-1.08	3.32
45	1	EOC: EOC: Other PT Losses	0.32	-1.95	-1.95	-0.01	-0.02	-1.26	3.72
45	2	EOC: EOC: Other PT Losses	0.32	-2.22	-2.21	-0.05	-0.06	-1.45	4.12
46	0	EOC: EOC: Other PT Losses	0.32	-2.22	-2.21	-0.05	-0.06	-1.45	4.12
46	1	EOC: EOC: Other PT Losses	0.32	-2.48	-2.48	-0.09	-0.10	-1.63	4.52
46	2	EOC: EOC: Other PT Losses	0.32	-2.75	-2.74	-0.13	-0.13	-1.82	4.92
47	0	EOC: EOC: Other PT Losses	0.32	-2.75	-2.74	-0.13	-0.13	-1.82	4.92
47	1	EOC: EOC: Other PT Losses	0.32	-2.94	-2.93	-0.16	-0.16	-1.95	5.20
47	2	EOC: EOC: Other PT Losses	0.32	-3.12	-3.12	-0.19	-0.19	-2.08	5.48
48	0	EOC: EOC: Other PT Losses	0.53	-2.89	-2.89	0.03	0.03	-1.85	5.67
48	1	EOC: EOC: Other PT Losses	0.53	-3.00	-3.00	0.01	0.01	-1.93	5.83
48	2	EOC: EOC: Other PT Losses	0.53	-3.11	-3.11	0.00	0.00	-2.00	6.00
49	0	EOC: EOC: Other PT Losses	0.41	-3.43	-3.43	-0.15	-0.16	-2.26	6.17
49	1	EOC: EOC: Other PT Losses	0.41	-3.25	-3.25	-0.13	-0.13	-2.14	5.90
49	2	EOC: EOC: Other PT Losses	0.41	-3.07	-3.07	-0.10	-0.10	-2.02	5.64
50	0	EOC: EOC: Other PT Losses	0.41	-3.07	-3.07	-0.10	-0.10	-2.02	5.64
50	1	EOC: EOC: Other PT Losses	0.41	-2.60	-2.60	-0.03	-0.04	-1.69	4.93
50	2	EOC: EOC: Other PT Losses	0.41	-2.13	-2.13	0.04	0.03	-1.36	4.22

MEMBER STRESSES

DECK & CANOPY MEMBERS
EOC

(-) compression

			SHRINKAGE (SH)						
Member	Station	Result Case	(P/A) @ Centroid (kips/ft²)	Normal Stress @ Point 1 (kips/ft²)	Normal Stress @ Point 2 (kips/ft²)	Normal Stress @ Point 3 (kips/ft²)	Normal Stress @ Point 4 (kips/ft²)	Normal Stress @ Point 5 (kips/ft²)	Normal Stress @ Point 6 (kips/ft²)
51	0	EOC: EOC: Other PT Losses	0.41	-2.13	-2.13	0.04	0.03	-1.36	4.22
51	1	EOC: EOC: Other PT Losses	0.41	-1.66	-1.66	0.10	0.10	-1.03	3.51
51	2	EOC: EOC: Other PT Losses	0.41	-1.19	-1.19	0.17	0.17	-0.71	2.81
52	0	EOC: EOC: Other PT Losses	0.41	-1.19	-1.19	0.17	0.17	-0.71	2.81
52	1	EOC: EOC: Other PT Losses	0.41	-0.82	-0.82	0.23	0.23	-0.45	2.25
52	2	EOC: EOC: Other PT Losses	0.41	-0.45	-0.45	0.28	0.28	-0.19	1.69
60	0	EOC: EOC: Other PT Losses	0.00	0.00	0.00	0.00	0.00	0.00	0.00
60	1	EOC: EOC: Other PT Losses	0.00	0.00	0.00	0.00	0.00	0.00	0.00
60	2	EOC: EOC: Other PT Losses	0.00	0.00	0.00	0.00	0.00	0.00	0.00
101	0	EOC: EOC: Other PT Losses	-0.04	0.68	0.68	-0.84	-0.84	0.52	-0.19
101	1	EOC: EOC: Other PT Losses	-0.04	0.60	0.60	-0.75	-0.75	0.46	-0.17
101	2	EOC: EOC: Other PT Losses	-0.04	0.52	0.52	-0.66	-0.66	0.39	-0.16
102	0	EOC: EOC: Other PT Losses	-0.04	0.52	0.52	-0.66	-0.66	0.39	-0.16
102	1	EOC: EOC: Other PT Losses	-0.04	0.03	0.03	-0.12	-0.12	0.01	-0.06
102	2	EOC: EOC: Other PT Losses	-0.04	-0.46	-0.46	0.42	0.42	-0.37	0.04
103	0	EOC: EOC: Other PT Losses	-0.04	-0.46	-0.46	0.42	0.42	-0.37	0.04
103	1	EOC: EOC: Other PT Losses	-0.04	-0.94	-0.94	0.95	0.95	-0.74	0.14
103	2	EOC: EOC: Other PT Losses	-0.04	-1.43	-1.43	1.48	1.48	-1.12	0.24
104	0	EOC: EOC: Other PT Losses	-0.04	-1.43	-1.43	1.48	1.48	-1.12	0.24
104	1	EOC: EOC: Other PT Losses	-0.04	-1.56	-1.56	1.63	1.63	-1.22	0.27
104	2	EOC: EOC: Other PT Losses	-0.04	-1.70	-1.70	1.77	1.77	-1.33	0.30
106	0	EOC: EOC: Other PT Losses	0.61	-1.17	-1.17	2.56	2.56	-0.77	0.97
106	1	EOC: EOC: Other PT Losses	0.61	-1.13	-1.13	2.51	2.51	-0.74	0.96
106	2	EOC: EOC: Other PT Losses	0.61	-1.09	-1.09	2.46	2.46	-0.71	0.95
107	0	EOC: EOC: Other PT Losses	0.61	-1.09	-1.09	2.46	2.46	-0.71	0.95
107	1	EOC: EOC: Other PT Losses	0.61	-0.83	-0.83	2.18	2.18	-0.51	0.90
107	2	EOC: EOC: Other PT Losses	0.61	-0.57	-0.57	1.90	1.90	-0.31	0.85
108	0	EOC: EOC: Other PT Losses	0.61	-0.57	-0.57	1.90	1.90	-0.31	0.85
108	1	EOC: EOC: Other PT Losses	0.61	-0.33	-0.33	1.63	1.63	-0.12	0.80
108	2	EOC: EOC: Other PT Losses	0.61	-0.09	-0.09	1.36	1.36	0.07	0.75
109	0	EOC: EOC: Other PT Losses	0.61	-0.09	-0.09	1.36	1.36	0.07	0.75
109	1	EOC: EOC: Other PT Losses	0.61	0.00	0.00	1.27	1.27	0.14	0.73
109	2	EOC: EOC: Other PT Losses	0.61	0.09	0.09	1.17	1.17	0.21	0.71
111	0	EOC: EOC: Other PT Losses	2.52	-0.49	-0.49	5.82	5.82	0.18	3.14
111	1	EOC: EOC: Other PT Losses	2.52	-0.37	-0.37	5.68	5.68	0.28	3.11
111	2	EOC: EOC: Other PT Losses	2.52	-0.24	-0.24	5.54	5.54	0.37	3.08
112	0	EOC: EOC: Other PT Losses	2.52	-0.24	-0.24	5.54	5.54	0.37	3.08
112	1	EOC: EOC: Other PT Losses	2.52	0.64	0.64	4.58	4.57	1.06	2.90
112	2	EOC: EOC: Other PT Losses	2.52	1.52	1.52	3.61	3.61	1.74	2.72
113	0	EOC: EOC: Other PT Losses	2.52	1.52	1.52	3.61	3.61	1.74	2.72
113	1	EOC: EOC: Other PT Losses	2.52	2.35	2.35	2.70	2.70	2.39	2.55
113	2	EOC: EOC: Other PT Losses	2.52	3.18	3.18	1.78	1.78	3.04	2.38
114	0	EOC: EOC: Other PT Losses	2.52	3.18	3.18	1.78	1.78	3.04	2.38
114	1	EOC: EOC: Other PT Losses	2.52	3.44	3.44	1.50	1.50	3.23	2.33
114	2	EOC: EOC: Other PT Losses	2.52	3.69	3.69	1.22	1.22	3.43	2.27
116	0	EOC: EOC: Other PT Losses	5.21	2.64	2.64	8.05	8.05	3.21	5.75
116	1	EOC: EOC: Other PT Losses	5.21	2.74	2.74	7.94	7.94	3.29	5.73
116	2	EOC: EOC: Other PT Losses	5.21	2.84	2.84	7.83	7.83	3.37	5.70

MEMBER STRESSES

DECK & CANOPY MEMBERS
EOC

(-) compression

			SHRINKAGE (SH)						
Member	Station	Result Case	(P/A) @ Centroid (kips/ft²)	Normal Stress @ Point 1 (kips/ft²)	Normal Stress @ Point 2 (kips/ft²)	Normal Stress @ Point 3 (kips/ft²)	Normal Stress @ Point 4 (kips/ft²)	Normal Stress @ Point 5 (kips/ft²)	Normal Stress @ Point 6 (kips/ft²)
117	0	EOC: EOC: Other PT Losses	5.21	2.84	2.84	7.83	7.83	3.37	5.70
117	1	EOC: EOC: Other PT Losses	5.21	3.76	3.76	6.81	6.81	4.08	5.51
117	2	EOC: EOC: Other PT Losses	5.21	4.69	4.69	5.80	5.80	4.80	5.32
118	0	EOC: EOC: Other PT Losses	5.21	4.69	4.69	5.80	5.80	4.80	5.32
118	1	EOC: EOC: Other PT Losses	5.21	5.55	5.55	4.85	4.85	5.47	5.15
118	2	EOC: EOC: Other PT Losses	5.21	6.41	6.41	3.91	3.90	6.14	4.97
119	0	EOC: EOC: Other PT Losses	5.21	6.41	6.41	3.91	3.90	6.14	4.97
119	1	EOC: EOC: Other PT Losses	5.21	6.61	6.61	3.68	3.68	6.30	4.93
119	2	EOC: EOC: Other PT Losses	5.21	6.82	6.82	3.45	3.45	6.46	4.88
121	0	EOC: EOC: Other PT Losses	8.19	6.48	6.48	10.07	10.07	6.86	8.55
121	1	EOC: EOC: Other PT Losses	8.19	6.54	6.54	10.01	10.01	6.91	8.53
121	2	EOC: EOC: Other PT Losses	8.19	6.59	6.59	9.95	9.95	6.95	8.52
122	0	EOC: EOC: Other PT Losses	8.19	6.59	6.59	9.95	9.95	6.95	8.52
122	1	EOC: EOC: Other PT Losses	8.19	6.83	6.83	9.69	9.69	7.13	8.47
122	2	EOC: EOC: Other PT Losses	8.19	7.06	7.06	9.43	9.43	7.32	8.43
123	0	EOC: EOC: Other PT Losses	8.19	7.06	7.06	9.43	9.43	7.32	8.43
123	1	EOC: EOC: Other PT Losses	8.19	7.30	7.30	9.18	9.18	7.50	8.38
123	2	EOC: EOC: Other PT Losses	8.19	7.53	7.53	8.92	8.92	7.68	8.33
124	0	EOC: EOC: Other PT Losses	8.19	7.53	7.53	8.92	8.92	7.68	8.33
124	1	EOC: EOC: Other PT Losses	8.19	7.58	7.58	8.87	8.87	7.72	8.32
124	2	EOC: EOC: Other PT Losses	8.19	7.63	7.63	8.81	8.81	7.76	8.31
126	0	EOC: EOC: Other PT Losses	9.77	3.67	3.67	16.48	16.47	5.03	11.03
126	1	EOC: EOC: Other PT Losses	9.77	4.43	4.43	15.64	15.64	5.62	10.87
126	2	EOC: EOC: Other PT Losses	9.77	5.18	5.19	14.81	14.81	6.21	10.72
127	0	EOC: EOC: Other PT Losses	9.77	5.18	5.19	14.81	14.81	6.21	10.72
127	1	EOC: EOC: Other PT Losses	9.77	7.84	7.84	11.90	11.90	8.27	10.17
127	2	EOC: EOC: Other PT Losses	9.77	10.49	10.49	8.98	8.98	10.33	9.62
128	0	EOC: EOC: Other PT Losses	9.77	10.49	10.49	8.98	8.98	10.33	9.62
128	1	EOC: EOC: Other PT Losses	9.77	13.21	13.22	6.00	5.99	12.45	9.06
133	0	EOC: EOC: Other PT Losses	9.54	18.25	18.25	-0.03	-0.03	16.31	7.74
133	1	EOC: EOC: Other PT Losses	9.54	14.30	14.30	4.31	4.31	13.24	8.56
133	2	EOC: EOC: Other PT Losses	9.54	10.35	10.35	8.65	8.64	10.17	9.37
134	0	EOC: EOC: Other PT Losses	9.54	10.35	10.35	8.65	8.64	10.17	9.37
134	1	EOC: EOC: Other PT Losses	9.54	6.41	6.41	12.97	12.97	7.11	10.18
134	2	EOC: EOC: Other PT Losses	9.54	2.47	2.47	17.30	17.30	4.04	10.99
135	0	EOC: EOC: Other PT Losses	9.54	2.47	2.47	17.30	17.30	4.04	10.99
135	1	EOC: EOC: Other PT Losses	9.54	1.45	1.45	18.42	18.42	3.25	11.20
135	2	EOC: EOC: Other PT Losses	9.54	0.43	0.43	19.54	19.54	2.46	11.41
137	0	EOC: EOC: Other PT Losses	6.03	5.14	5.15	7.01	7.01	5.34	6.22
137	1	EOC: EOC: Other PT Losses	6.03	5.02	5.02	7.15	7.15	5.24	6.24
137	2	EOC: EOC: Other PT Losses	6.03	4.89	4.89	7.29	7.29	5.15	6.27
138	0	EOC: EOC: Other PT Losses	6.03	4.89	4.89	7.29	7.29	5.15	6.27
138	1	EOC: EOC: Other PT Losses	6.03	4.45	4.46	7.77	7.77	4.81	6.36
138	2	EOC: EOC: Other PT Losses	6.03	4.02	4.02	8.25	8.25	4.47	6.45
139	0	EOC: EOC: Other PT Losses	6.03	4.02	4.02	8.25	8.25	4.47	6.45
139	1	EOC: EOC: Other PT Losses	6.03	3.61	3.61	8.69	8.69	4.15	6.53
139	2	EOC: EOC: Other PT Losses	6.03	3.20	3.20	9.14	9.14	3.83	6.62

MEMBER STRESSES

DECK & CANOPY MEMBERS
EOC

(-) compression

			SHRINKAGE (SH)						
Member	Station	Result Case	(P/A) @ Centroid (kips/ft²)	Normal Stress @ Point 1 (kips/ft²)	Normal Stress @ Point 2 (kips/ft²)	Normal Stress @ Point 3 (kips/ft²)	Normal Stress @ Point 4 (kips/ft²)	Normal Stress @ Point 5 (kips/ft²)	Normal Stress @ Point 6 (kips/ft²)
140	0	EOC: EOC: Other PT Losses	6.03	3.20	3.20	9.14	9.14	3.83	6.62
140	1	EOC: EOC: Other PT Losses	6.03	3.04	3.04	9.32	9.32	3.71	6.65
140	2	EOC: EOC: Other PT Losses	6.03	2.87	2.88	9.50	9.50	3.58	6.68
142	0	EOC: EOC: Other PT Losses	3.93	9.83	9.83	-2.55	-2.55	8.51	2.71
142	1	EOC: EOC: Other PT Losses	3.93	8.76	8.76	-1.38	-1.38	7.68	2.93
142	2	EOC: EOC: Other PT Losses	3.93	7.69	7.69	-0.20	-0.21	6.85	3.15
143	0	EOC: EOC: Other PT Losses	3.93	7.69	7.69	-0.20	-0.21	6.85	3.15
143	1	EOC: EOC: Other PT Losses	3.93	5.48	5.49	2.21	2.21	5.14	3.60
143	2	EOC: EOC: Other PT Losses	3.93	3.28	3.28	4.63	4.63	3.43	4.06
144	0	EOC: EOC: Other PT Losses	3.93	3.28	3.28	4.63	4.63	3.43	4.06
144	1	EOC: EOC: Other PT Losses	3.93	0.93	0.93	7.21	7.21	1.60	4.54
144	2	EOC: EOC: Other PT Losses	3.93	-1.42	-1.41	9.79	9.79	-0.22	5.03
145	0	EOC: EOC: Other PT Losses	3.93	-1.42	-1.41	9.79	9.79	-0.23	5.03
145	1	EOC: EOC: Other PT Losses	3.93	-2.09	-2.09	10.53	10.53	-0.75	5.16
145	2	EOC: EOC: Other PT Losses	3.93	-2.77	-2.77	11.27	11.27	-1.27	5.30
147	0	EOC: EOC: Other PT Losses	2.02	4.51	4.51	-0.71	-0.71	3.95	1.51
147	1	EOC: EOC: Other PT Losses	2.02	3.69	3.69	0.19	0.19	3.32	1.68
147	2	EOC: EOC: Other PT Losses	2.02	2.87	2.87	1.09	1.08	2.68	1.84
148	0	EOC: EOC: Other PT Losses	2.02	2.87	2.87	1.08	1.08	2.68	1.84
148	1	EOC: EOC: Other PT Losses	2.02	1.39	1.39	2.71	2.71	1.53	2.15
148	2	EOC: EOC: Other PT Losses	2.02	-0.09	-0.09	4.34	4.34	0.38	2.45
149	0	EOC: EOC: Other PT Losses	2.02	-0.09	-0.09	4.34	4.34	0.38	2.45
149	1	EOC: EOC: Other PT Losses	2.02	-1.68	-1.68	6.08	6.08	-0.85	2.78
149	2	EOC: EOC: Other PT Losses	2.02	-3.26	-3.26	7.82	7.82	-2.08	3.11
150	0	EOC: EOC: Other PT Losses	2.02	-3.26	-3.26	7.82	7.81	-2.08	3.11
150	1	EOC: EOC: Other PT Losses	2.02	-3.74	-3.74	8.34	8.34	-2.46	3.20
150	2	EOC: EOC: Other PT Losses	2.02	-4.22	-4.22	8.87	8.87	-2.83	3.30
152	0	EOC: EOC: Other PT Losses	0.64	-0.09	-0.09	1.44	1.44	0.08	0.79
152	1	EOC: EOC: Other PT Losses	0.64	-0.53	-0.53	1.92	1.92	-0.27	0.88
152	2	EOC: EOC: Other PT Losses	0.64	-0.97	-0.97	2.41	2.41	-0.61	0.97
153	0	EOC: EOC: Other PT Losses	0.64	-0.97	-0.97	2.41	2.41	-0.61	0.97
153	1	EOC: EOC: Other PT Losses	0.64	-1.69	-1.69	3.20	3.20	-1.17	1.12
153	2	EOC: EOC: Other PT Losses	0.64	-2.41	-2.41	3.99	3.99	-1.73	1.27
154	0	EOC: EOC: Other PT Losses	0.64	-2.41	-2.41	3.99	3.99	-1.73	1.27
154	1	EOC: EOC: Other PT Losses	0.64	-3.19	-3.19	4.85	4.85	-2.33	1.43
154	2	EOC: EOC: Other PT Losses	0.64	-3.97	-3.97	5.70	5.70	-2.94	1.59
155	0	EOC: EOC: Other PT Losses	0.64	-3.97	-3.97	5.70	5.70	-2.94	1.59
155	1	EOC: EOC: Other PT Losses	0.64	-4.21	-4.21	5.97	5.97	-3.13	1.64
155	2	EOC: EOC: Other PT Losses	0.64	-4.46	-4.46	6.24	6.24	-3.32	1.69
157	0	EOC: EOC: Other PT Losses	-0.15	-5.78	-5.78	6.04	6.04	-4.52	1.01
157	1	EOC: EOC: Other PT Losses	-0.15	-5.16	-5.16	5.36	5.36	-4.05	0.89
157	2	EOC: EOC: Other PT Losses	-0.15	-4.55	-4.55	4.68	4.68	-3.57	0.76
158	0	EOC: EOC: Other PT Losses	-0.15	-4.55	-4.55	4.68	4.68	-3.57	0.76
158	1	EOC: EOC: Other PT Losses	-0.15	-2.57	-2.57	2.51	2.51	-2.03	0.35
158	2	EOC: EOC: Other PT Losses	-0.15	-0.60	-0.60	0.35	0.35	-0.50	-0.05
159	0	EOC: EOC: Other PT Losses	-0.15	-0.60	-0.60	0.35	0.35	-0.50	-0.05
159	1	EOC: EOC: Other PT Losses	-0.15	1.41	1.41	-1.85	-1.85	1.06	-0.47
159	2	EOC: EOC: Other PT Losses	-0.15	3.41	3.41	-4.05	-4.05	2.62	-0.88

MEMBER STRESSES

DECK & CANOPY MEMBERS
EOC

(-) compression

			PRESTRESS LOAD (PS)						
Member	Station	Result Case	(P/A) @ Centroid (kips/ft²)	Normal Stress @ Point 1 (kips/ft²)	Normal Stress @ Point 2 (kips/ft²)	Normal Stress @ Point 3 (kips/ft²)	Normal Stress @ Point 4 (kips/ft²)	Normal Stress @ Point 5 (kips/ft²)	Normal Stress @ Point 6 (kips/ft²)
1	0	EOC: EOC: Other PT Losses	-182.01	-69.58	-69.58	-165.57	-165.57	-103.75	-351.02
1	1	EOC: EOC: Other PT Losses	-182.01	-78.11	-78.11	-166.82	-166.82	-109.69	-338.21
1	2	EOC: EOC: Other PT Losses	-182.02	-86.64	-86.64	-168.07	-168.07	-115.63	-325.40
2	0	EOC: EOC: Other PT Losses	-181.41	-93.55	-93.55	-168.56	-168.56	-120.25	-313.48
2	1	EOC: EOC: Other PT Losses	-181.42	-120.68	-120.69	-172.54	-172.54	-139.15	-272.73
2	2	EOC: EOC: Other PT Losses	-181.44	-147.83	-147.83	-176.53	-176.53	-158.05	-231.98
3	0	EOC: EOC: Other PT Losses	-184.97	-148.55	-148.56	-179.64	-179.64	-159.62	-239.71
3	1	EOC: EOC: Other PT Losses	-191.76	-212.13	-212.13	-194.74	-194.73	-205.94	-161.13
3	2	EOC: EOC: Other PT Losses	-191.86	-209.03	-209.04	-194.37	-194.37	-203.81	-166.04
4	0	EOC: EOC: Other PT Losses	-191.86	-209.03	-209.04	-194.37	-194.37	-203.81	-166.04
4	1	EOC: EOC: Other PT Losses	-192.10	-202.53	-202.54	-193.63	-193.62	-199.36	-176.41
4	2	EOC: EOC: Other PT Losses	-192.32	-196.01	-196.02	-192.87	-192.85	-194.89	-186.77
5	0	EOC: EOC: Other PT Losses	-192.32	-196.01	-196.02	-192.87	-192.85	-194.89	-186.77
5	1	EOC: EOC: Other PT Losses	-192.56	-189.51	-189.53	-192.13	-192.11	-190.44	-197.14
5	2	EOC: EOC: Other PT Losses	-192.78	-182.99	-183.01	-191.36	-191.34	-185.97	-207.49
6	0	EOC: EOC: Other PT Losses	-192.78	-182.99	-183.01	-191.36	-191.34	-185.97	-207.49
6	1	EOC: EOC: Other PT Losses	-192.80	-182.11	-182.13	-191.25	-191.23	-185.37	-208.86
6	2	EOC: EOC: Other PT Losses	-192.84	-181.25	-181.27	-191.16	-191.14	-184.78	-210.26
7	0	EOC: EOC: Other PT Losses	-192.96	-196.62	-196.64	-193.51	-193.48	-195.51	-187.44
7	1	EOC: EOC: Other PT Losses	-192.97	-194.73	-194.76	-193.24	-193.22	-194.21	-190.30
7	2	EOC: EOC: Other PT Losses	-192.99	-192.85	-192.87	-192.98	-192.96	-192.90	-193.17
8	0	EOC: EOC: Other PT Losses	-196.13	-196.37	-196.39	-196.17	-196.15	-196.30	-195.74
8	1	EOC: EOC: Other PT Losses	-196.24	-195.80	-195.82	-196.19	-196.16	-195.94	-196.88
8	2	EOC: EOC: Other PT Losses	-196.32	-195.19	-195.22	-196.17	-196.15	-195.55	-198.00
9	0	EOC: EOC: Other PT Losses	-196.32	-195.19	-195.22	-196.17	-196.15	-195.55	-198.00
9	1	EOC: EOC: Other PT Losses	-196.56	-193.60	-193.63	-196.14	-196.12	-194.51	-200.99
9	2	EOC: EOC: Other PT Losses	-196.81	-192.01	-192.04	-196.13	-196.09	-193.48	-204.00
10	0	EOC: EOC: Other PT Losses	-196.81	-192.01	-192.04	-196.13	-196.09	-193.48	-204.00
10	1	EOC: EOC: Other PT Losses	-197.05	-190.45	-190.48	-196.10	-196.07	-192.47	-206.95
10	2	EOC: EOC: Other PT Losses	-197.30	-188.90	-188.93	-196.09	-196.06	-191.46	-209.91
11	0	EOC: EOC: Other PT Losses	-197.30	-188.90	-188.93	-196.09	-196.06	-191.46	-209.91
11	1	EOC: EOC: Other PT Losses	-197.32	-188.67	-188.71	-196.08	-196.04	-191.31	-210.29
11	2	EOC: EOC: Other PT Losses	-197.36	-188.47	-188.51	-196.09	-196.05	-191.19	-210.70
12	0	EOC: EOC: Other PT Losses	-197.82	-202.43	-202.47	-198.52	-198.48	-201.04	-190.87
12	1	EOC: EOC: Other PT Losses	-197.83	-200.48	-200.52	-198.24	-198.20	-199.69	-193.82
12	2	EOC: EOC: Other PT Losses	-197.85	-198.55	-198.59	-197.97	-197.93	-198.35	-196.77
13	0	EOC: EOC: Other PT Losses	-200.63	-200.33	-200.36	-200.61	-200.57	-200.43	-201.06
13	1	EOC: EOC: Other PT Losses	-200.71	-199.90	-199.94	-200.62	-200.58	-200.16	-201.91
13	2	EOC: EOC: Other PT Losses	-200.80	-199.48	-199.52	-200.63	-200.59	-199.89	-202.76
14	0	EOC: EOC: Other PT Losses	-200.80	-199.48	-199.52	-200.63	-200.59	-199.89	-202.76
14	1	EOC: EOC: Other PT Losses	-201.07	-198.17	-198.22	-200.67	-200.63	-199.07	-205.40
14	2	EOC: EOC: Other PT Losses	-201.33	-196.86	-196.91	-200.71	-200.66	-198.24	-208.01
15	0	EOC: EOC: Other PT Losses	-201.33	-196.86	-196.91	-200.71	-200.66	-198.24	-208.01
15	1	EOC: EOC: Other PT Losses	-201.60	-195.49	-195.54	-200.74	-200.69	-197.37	-210.75
15	2	EOC: EOC: Other PT Losses	-201.86	-194.11	-194.17	-200.76	-200.71	-196.49	-213.47
16	0	EOC: EOC: Other PT Losses	-201.86	-194.11	-194.17	-200.76	-200.71	-196.49	-213.47
16	1	EOC: EOC: Other PT Losses	-201.88	-193.94	-194.00	-200.75	-200.70	-196.38	-213.77
16	2	EOC: EOC: Other PT Losses	-201.93	-193.80	-193.86	-200.77	-200.71	-196.29	-214.09

MEMBER STRESSES

DECK & CANOPY MEMBERS
EOC

(-) compression

			PRESTRESS LOAD (PS)						
Member	Station	Result Case	(P/A) @ Centroid (kips/ft²)	Normal Stress @ Point 1 (kips/ft²)	Normal Stress @ Point 2 (kips/ft²)	Normal Stress @ Point 3 (kips/ft²)	Normal Stress @ Point 4 (kips/ft²)	Normal Stress @ Point 5 (kips/ft²)	Normal Stress @ Point 6 (kips/ft²)
17	0	EOC: EOC: Other PT Losses	-202.92	-204.83	-204.88	-203.23	-203.18	-204.27	-200.02
17	1	EOC: EOC: Other PT Losses	-202.93	-202.83	-202.89	-202.95	-202.89	-202.88	-203.05
17	2	EOC: EOC: Other PT Losses	-202.95	-200.83	-200.89	-202.67	-202.62	-201.50	-206.08
18	0	EOC: EOC: Other PT Losses	-205.13	-201.12	-201.17	-204.58	-204.52	-202.36	-211.12
18	1	EOC: EOC: Other PT Losses	-205.21	-200.86	-200.92	-204.61	-204.55	-202.20	-211.70
18	2	EOC: EOC: Other PT Losses	-205.26	-200.58	-200.64	-204.61	-204.55	-202.03	-212.25
19	0	EOC: EOC: Other PT Losses	-205.26	-200.58	-200.64	-204.61	-204.55	-202.03	-212.25
19	1	EOC: EOC: Other PT Losses	-205.56	-199.46	-199.52	-204.71	-204.64	-201.33	-214.69
19	2	EOC: EOC: Other PT Losses	-205.84	-198.30	-198.37	-204.77	-204.71	-200.62	-217.11
20	0	EOC: EOC: Other PT Losses	-205.84	-198.30	-198.37	-204.77	-204.71	-200.62	-217.11
20	1	EOC: EOC: Other PT Losses	-206.14	-197.18	-197.25	-204.87	-204.79	-199.92	-219.55
20	2	EOC: EOC: Other PT Losses	-206.41	-196.03	-196.10	-204.94	-204.86	-199.21	-221.96
21	0	EOC: EOC: Other PT Losses	-206.41	-196.03	-196.10	-204.94	-204.86	-199.21	-221.96
21	1	EOC: EOC: Other PT Losses	-206.46	-195.82	-195.90	-204.95	-204.87	-199.08	-222.39
21	2	EOC: EOC: Other PT Losses	-206.51	-195.62	-195.70	-204.96	-204.88	-198.96	-222.81
22	0	EOC: EOC: Other PT Losses	-208.31	-201.95	-202.03	-207.43	-207.35	-203.91	-217.81
22	1	EOC: EOC: Other PT Losses	-208.33	-199.89	-199.97	-207.14	-207.06	-202.48	-220.95
22	2	EOC: EOC: Other PT Losses	-208.34	-197.82	-197.90	-206.85	-206.77	-201.05	-224.09
23	0	EOC: EOC: Other PT Losses	-209.80	-193.86	-193.94	-207.51	-207.44	-198.73	-233.71
23	1	EOC: EOC: Other PT Losses	-209.85	-195.00	-195.07	-207.72	-207.64	-199.54	-232.12
23	2	EOC: EOC: Other PT Losses	-209.89	-196.13	-196.21	-207.92	-207.84	-200.34	-230.52
24	0	EOC: EOC: Other PT Losses	-209.89	-196.13	-196.21	-207.92	-207.84	-200.34	-230.52
24	1	EOC: EOC: Other PT Losses	-210.19	-203.72	-203.80	-209.29	-209.21	-205.71	-219.85
24	2	EOC: EOC: Other PT Losses	-210.24	-211.06	-211.15	-210.41	-210.32	-210.84	-208.92
25	0	EOC: EOC: Other PT Losses	-210.24	-211.06	-211.15	-210.41	-210.32	-210.84	-208.92
25	1	EOC: EOC: Other PT Losses	-209.94	-218.07	-218.16	-211.18	-211.09	-215.63	-197.65
25	2	EOC: EOC: Other PT Losses	-209.63	-225.06	-225.15	-211.94	-211.84	-220.40	-186.36
26	0	EOC: EOC: Other PT Losses	-209.63	-225.06	-225.15	-211.94	-211.84	-220.40	-186.36
26	1	EOC: EOC: Other PT Losses	-209.55	-226.85	-226.95	-212.14	-212.04	-221.63	-183.47
26	2	EOC: EOC: Other PT Losses	-205.89	-166.90	-167.00	-200.24	-200.14	-178.78	-264.43
29	0	EOC: EOC: Other PT Losses	-113.77	-92.38	-92.48	-110.70	-110.60	-98.92	-145.85
29	1	EOC: EOC: Other PT Losses	-112.97	-121.17	-121.27	-114.22	-114.13	-118.71	-100.56
29	2	EOC: EOC: Other PT Losses	-112.93	-120.09	-120.18	-114.03	-113.94	-117.94	-102.09
30	0	EOC: EOC: Other PT Losses	-112.93	-120.09	-120.18	-114.03	-113.94	-117.94	-102.09
30	1	EOC: EOC: Other PT Losses	-112.76	-115.76	-115.85	-113.25	-113.17	-114.88	-108.19
30	2	EOC: EOC: Other PT Losses	-112.61	-111.45	-111.52	-112.48	-112.41	-111.83	-114.30
31	0	EOC: EOC: Other PT Losses	-112.61	-111.45	-111.52	-112.48	-112.41	-111.83	-114.30
31	1	EOC: EOC: Other PT Losses	-112.44	-107.12	-107.19	-111.70	-111.64	-108.76	-120.39
31	2	EOC: EOC: Other PT Losses	-112.29	-102.80	-102.86	-110.93	-110.87	-105.71	-126.50
32	0	EOC: EOC: Other PT Losses	-112.29	-102.80	-102.86	-110.93	-110.87	-105.71	-126.50
32	1	EOC: EOC: Other PT Losses	-112.26	-102.17	-102.22	-110.82	-110.76	-105.25	-127.39
32	2	EOC: EOC: Other PT Losses	-112.24	-101.54	-101.59	-110.71	-110.65	-104.81	-128.29
33	0	EOC: EOC: Other PT Losses	-109.86	-98.91	-98.97	-108.29	-108.24	-102.26	-126.28
33	1	EOC: EOC: Other PT Losses	-109.86	-100.38	-100.44	-108.51	-108.45	-103.28	-124.07
33	2	EOC: EOC: Other PT Losses	-109.86	-101.85	-101.91	-108.72	-108.66	-104.30	-121.85
34	0	EOC: EOC: Other PT Losses	-109.66	-95.40	-95.46	-107.61	-107.55	-99.76	-131.06
34	1	EOC: EOC: Other PT Losses	-109.65	-96.37	-96.43	-107.74	-107.69	-100.43	-129.57
34	2	EOC: EOC: Other PT Losses	-109.63	-97.34	-97.39	-107.87	-107.81	-101.09	-128.07

MEMBER STRESSES

DECK & CANOPY MEMBERS
EOC

(-) compression

			PRESTRESS LOAD (PS)						
Member	Station	Result Case	(P/A) @ Centroid (kips/ft²)	Normal Stress @ Point 1 (kips/ft²)	Normal Stress @ Point 2 (kips/ft²)	Normal Stress @ Point 3 (kips/ft²)	Normal Stress @ Point 4 (kips/ft²)	Normal Stress @ Point 5 (kips/ft²)	Normal Stress @ Point 6 (kips/ft²)
35	0	EOC: EOC: Other PT Losses	-109.63	-97.34	-97.39	-107.87	-107.81	-101.09	-128.07
35	1	EOC: EOC: Other PT Losses	-109.57	-100.31	-100.37	-108.25	-108.19	-103.15	-123.44
35	2	EOC: EOC: Other PT Losses	-109.53	-103.31	-103.36	-108.65	-108.59	-105.22	-118.83
36	0	EOC: EOC: Other PT Losses	-109.53	-103.31	-103.36	-108.65	-108.59	-105.22	-118.83
36	1	EOC: EOC: Other PT Losses	-109.48	-106.31	-106.36	-109.04	-109.00	-107.29	-114.21
36	2	EOC: EOC: Other PT Losses	-109.42	-109.30	-109.35	-109.43	-109.38	-109.35	-109.57
37	0	EOC: EOC: Other PT Losses	-109.42	-109.30	-109.35	-109.43	-109.38	-109.35	-109.57
37	1	EOC: EOC: Other PT Losses	-109.39	-110.85	-110.89	-109.63	-109.59	-110.42	-107.18
37	2	EOC: EOC: Other PT Losses	-109.37	-112.39	-112.44	-109.83	-109.79	-111.49	-104.78
38	0	EOC: EOC: Other PT Losses	-106.77	-107.28	-107.32	-106.87	-106.82	-107.14	-105.96
38	1	EOC: EOC: Other PT Losses	-106.76	-108.81	-108.85	-107.08	-107.04	-108.20	-103.65
38	2	EOC: EOC: Other PT Losses	-106.76	-110.33	-110.38	-107.31	-107.26	-109.26	-101.35
39	0	EOC: EOC: Other PT Losses	-106.98	-101.93	-101.98	-106.27	-106.22	-103.48	-114.53
39	1	EOC: EOC: Other PT Losses	-106.97	-102.42	-102.46	-106.33	-106.29	-103.82	-113.78
39	2	EOC: EOC: Other PT Losses	-106.95	-102.89	-102.93	-106.38	-106.34	-104.14	-113.02
40	0	EOC: EOC: Other PT Losses	-106.95	-102.89	-102.93	-106.38	-106.34	-104.14	-113.02
40	1	EOC: EOC: Other PT Losses	-106.90	-104.32	-104.36	-106.55	-106.51	-105.12	-110.76
40	2	EOC: EOC: Other PT Losses	-106.85	-105.74	-105.77	-106.71	-106.67	-106.09	-108.50
41	0	EOC: EOC: Other PT Losses	-106.85	-105.74	-105.77	-106.71	-106.67	-106.09	-108.50
41	1	EOC: EOC: Other PT Losses	-106.81	-107.17	-107.20	-106.88	-106.85	-107.07	-106.24
41	2	EOC: EOC: Other PT Losses	-106.76	-108.59	-108.62	-107.04	-107.01	-108.05	-103.97
42	0	EOC: EOC: Other PT Losses	-106.76	-108.59	-108.62	-107.04	-107.01	-108.05	-103.97
42	1	EOC: EOC: Other PT Losses	-106.73	-109.48	-109.51	-107.15	-107.12	-108.65	-102.57
42	2	EOC: EOC: Other PT Losses	-106.70	-110.36	-110.39	-107.25	-107.22	-109.26	-101.17
43	0	EOC: EOC: Other PT Losses	-103.70	-104.66	-104.69	-103.86	-103.83	-104.38	-102.24
43	1	EOC: EOC: Other PT Losses	-103.70	-106.13	-106.16	-104.07	-104.04	-105.40	-100.02
43	2	EOC: EOC: Other PT Losses	-103.69	-107.61	-107.63	-104.28	-104.25	-106.43	-97.79
44	0	EOC: EOC: Other PT Losses	-104.18	-98.46	-98.49	-103.36	-103.33	-100.21	-112.74
44	1	EOC: EOC: Other PT Losses	-104.17	-99.08	-99.11	-103.44	-103.41	-100.64	-111.79
44	2	EOC: EOC: Other PT Losses	-104.14	-99.69	-99.72	-103.51	-103.48	-101.06	-110.81
45	0	EOC: EOC: Other PT Losses	-104.14	-99.69	-99.72	-103.51	-103.48	-101.06	-110.81
45	1	EOC: EOC: Other PT Losses	-104.10	-101.42	-101.45	-103.72	-103.70	-102.24	-108.11
45	2	EOC: EOC: Other PT Losses	-104.05	-103.15	-103.17	-103.93	-103.91	-103.43	-105.40
46	0	EOC: EOC: Other PT Losses	-104.05	-103.15	-103.17	-103.93	-103.91	-103.43	-105.40
46	1	EOC: EOC: Other PT Losses	-104.01	-104.87	-104.89	-104.15	-104.13	-104.62	-102.70
46	2	EOC: EOC: Other PT Losses	-103.97	-106.60	-106.62	-104.36	-104.35	-105.81	-100.00
47	0	EOC: EOC: Other PT Losses	-103.97	-106.60	-106.62	-104.36	-104.35	-105.81	-100.00
47	1	EOC: EOC: Other PT Losses	-103.94	-107.83	-107.85	-104.52	-104.50	-106.65	-98.08
47	2	EOC: EOC: Other PT Losses	-103.90	-109.05	-109.07	-104.66	-104.65	-107.49	-96.15
48	0	EOC: EOC: Other PT Losses	-100.64	-102.59	-102.61	-100.93	-100.92	-102.00	-97.70
48	1	EOC: EOC: Other PT Losses	-100.64	-104.09	-104.11	-101.15	-101.14	-103.05	-95.43
48	2	EOC: EOC: Other PT Losses	-100.64	-105.59	-105.61	-101.37	-101.35	-104.09	-93.17
49	0	EOC: EOC: Other PT Losses	-101.36	-95.25	-95.26	-100.47	-100.46	-97.11	-110.54
49	1	EOC: EOC: Other PT Losses	-101.35	-95.64	-95.66	-100.52	-100.51	-97.38	-109.92
49	2	EOC: EOC: Other PT Losses	-101.33	-96.03	-96.04	-100.56	-100.55	-97.64	-109.29
50	0	EOC: EOC: Other PT Losses	-101.33	-96.03	-96.04	-100.56	-100.55	-97.64	-109.29
50	1	EOC: EOC: Other PT Losses	-101.28	-97.06	-97.07	-100.67	-100.66	-98.35	-107.62
50	2	EOC: EOC: Other PT Losses	-101.24	-98.10	-98.10	-100.79	-100.78	-99.06	-105.97

MEMBER STRESSES

DECK & CANOPY MEMBERS
EOC

(-) compression

			PRESTRESS LOAD (PS)						
Member	Station	Result Case	(P/A) @ Centroid (kips/ft²)	Normal Stress @ Point 1 (kips/ft²)	Normal Stress @ Point 2 (kips/ft²)	Normal Stress @ Point 3 (kips/ft²)	Normal Stress @ Point 4 (kips/ft²)	Normal Stress @ Point 5 (kips/ft²)	Normal Stress @ Point 6 (kips/ft²)
51	0	EOC: EOC: Other PT Losses	-101.24	-98.10	-98.10	-100.79	-100.78	-99.06	-105.97
51	1	EOC: EOC: Other PT Losses	-101.20	-99.13	-99.13	-100.90	-100.89	-99.76	-104.31
51	2	EOC: EOC: Other PT Losses	-101.16	-100.17	-100.17	-101.02	-101.01	-100.47	-102.65
52	0	EOC: EOC: Other PT Losses	-101.16	-100.17	-100.17	-101.02	-101.01	-100.47	-102.65
52	1	EOC: EOC: Other PT Losses	-101.13	-100.99	-100.99	-101.11	-101.11	-101.03	-101.34
52	2	EOC: EOC: Other PT Losses	-100.85	-101.49	-101.49	-100.95	-100.95	-101.30	-99.90
60	0	EOC: EOC: Other PT Losses	0.00	0.00	0.00	0.00	0.00	0.00	0.00
60	1	EOC: EOC: Other PT Losses	-181.89	6.67	6.67	-154.32	-154.32	-50.64	-465.36
60	2	EOC: EOC: Other PT Losses	-181.92	-44.74	-44.74	-161.85	-161.85	-86.43	-388.13
101	0	EOC: EOC: Other PT Losses	-208.51	-520.47	-520.47	134.00	134.00	-450.95	-144.29
101	1	EOC: EOC: Other PT Losses	-211.65	-360.02	-360.02	-48.76	-48.75	-326.96	-181.11
101	2	EOC: EOC: Other PT Losses	-216.65	-317.83	-317.83	-105.56	-105.56	-295.29	-195.82
102	0	EOC: EOC: Other PT Losses	-216.65	-317.83	-317.83	-105.56	-105.56	-295.29	-195.82
102	1	EOC: EOC: Other PT Losses	-220.48	-330.73	-330.73	-99.43	-99.43	-306.16	-197.78
102	2	EOC: EOC: Other PT Losses	-222.61	-214.87	-214.87	-231.11	-231.11	-216.59	-224.20
103	0	EOC: EOC: Other PT Losses	-222.61	-214.86	-214.87	-231.11	-231.11	-216.59	-224.20
103	1	EOC: EOC: Other PT Losses	-231.34	-198.30	-198.31	-267.60	-267.60	-205.67	-238.14
103	2	EOC: EOC: Other PT Losses	-231.68	-209.65	-209.65	-255.87	-255.86	-214.56	-236.21
104	0	EOC: EOC: Other PT Losses	-231.68	-209.65	-209.65	-255.87	-255.86	-214.56	-236.21
104	1	EOC: EOC: Other PT Losses	-231.77	-214.56	-214.56	-250.68	-250.67	-218.40	-235.32
104	2	EOC: EOC: Other PT Losses	-231.87	-219.45	-219.46	-245.50	-245.49	-222.22	-234.42
106	0	EOC: EOC: Other PT Losses	-221.81	-273.09	-273.10	-165.50	-165.50	-261.66	-211.25
106	1	EOC: EOC: Other PT Losses	-221.87	-268.21	-268.22	-170.98	-170.97	-257.89	-212.32
106	2	EOC: EOC: Other PT Losses	-221.90	-263.30	-263.31	-176.44	-176.43	-254.08	-213.37
107	0	EOC: EOC: Other PT Losses	-221.90	-263.30	-263.31	-176.44	-176.44	-254.08	-213.38
107	1	EOC: EOC: Other PT Losses	-222.16	-244.89	-244.90	-197.19	-197.19	-239.83	-217.48
107	2	EOC: EOC: Other PT Losses	-222.41	-226.46	-226.47	-217.96	-217.95	-225.56	-221.57
108	0	EOC: EOC: Other PT Losses	-222.41	-226.46	-226.47	-217.96	-217.95	-225.56	-221.57
108	1	EOC: EOC: Other PT Losses	-222.67	-206.21	-206.22	-240.73	-240.72	-209.88	-226.05
108	2	EOC: EOC: Other PT Losses	-222.90	-185.91	-185.92	-263.50	-263.49	-194.16	-230.51
109	0	EOC: EOC: Other PT Losses	-222.90	-185.91	-185.92	-263.50	-263.49	-194.16	-230.51
109	1	EOC: EOC: Other PT Losses	-222.99	-180.39	-180.40	-269.77	-269.76	-189.89	-231.76
109	2	EOC: EOC: Other PT Losses	-223.07	-174.83	-174.85	-276.03	-276.02	-185.59	-233.00
111	0	EOC: EOC: Other PT Losses	-213.11	-241.92	-241.94	-181.48	-181.47	-235.51	-207.18
111	1	EOC: EOC: Other PT Losses	-213.15	-238.61	-238.62	-185.20	-185.19	-232.94	-207.91
111	2	EOC: EOC: Other PT Losses	-213.20	-235.33	-235.34	-188.90	-188.89	-230.40	-208.64
112	0	EOC: EOC: Other PT Losses	-213.20	-235.33	-235.34	-188.90	-188.89	-230.40	-208.64
112	1	EOC: EOC: Other PT Losses	-213.47	-223.10	-223.12	-202.89	-202.88	-220.96	-211.49
112	2	EOC: EOC: Other PT Losses	-213.72	-210.87	-210.88	-216.85	-216.84	-211.51	-214.31
113	0	EOC: EOC: Other PT Losses	-213.72	-210.87	-210.88	-216.85	-216.84	-211.51	-214.31
113	1	EOC: EOC: Other PT Losses	-213.98	-196.92	-196.93	-232.71	-232.70	-200.72	-217.49
113	2	EOC: EOC: Other PT Losses	-214.23	-182.93	-182.95	-248.59	-248.57	-189.91	-220.67
114	0	EOC: EOC: Other PT Losses	-214.23	-182.93	-182.95	-248.59	-248.57	-189.91	-220.67
114	1	EOC: EOC: Other PT Losses	-214.30	-180.16	-180.17	-251.79	-251.77	-187.77	-221.33
114	2	EOC: EOC: Other PT Losses	-214.38	-177.41	-177.42	-254.97	-254.96	-185.65	-221.99
116	0	EOC: EOC: Other PT Losses	-203.91	-220.72	-220.74	-185.45	-185.44	-216.98	-200.45
116	1	EOC: EOC: Other PT Losses	-203.94	-218.49	-218.51	-187.97	-187.95	-215.26	-200.95
116	2	EOC: EOC: Other PT Losses	-203.98	-216.30	-216.31	-190.46	-190.45	-213.56	-201.45

MEMBER STRESSES

DECK & CANOPY MEMBERS
EOC

(-) compression

			PRESTRESS LOAD (PS)						
Member	Station	Result Case	(P/A) @ Centroid (kips/ft²)	Normal Stress @ Point 1 (kips/ft²)	Normal Stress @ Point 2 (kips/ft²)	Normal Stress @ Point 3 (kips/ft²)	Normal Stress @ Point 4 (kips/ft²)	Normal Stress @ Point 5 (kips/ft²)	Normal Stress @ Point 6 (kips/ft²)
117	0	EOC: EOC: Other PT Losses	-203.98	-216.30	-216.31	-190.46	-190.45	-213.56	-201.45
117	1	EOC: EOC: Other PT Losses	-204.26	-208.13	-208.15	-200.00	-199.98	-207.28	-203.46
117	2	EOC: EOC: Other PT Losses	-204.53	-199.98	-200.00	-209.52	-209.51	-201.00	-205.47
118	0	EOC: EOC: Other PT Losses	-204.53	-199.98	-200.00	-209.52	-209.51	-201.00	-205.47
118	1	EOC: EOC: Other PT Losses	-204.79	-190.33	-190.35	-220.66	-220.65	-193.56	-207.76
118	2	EOC: EOC: Other PT Losses	-205.06	-180.68	-180.70	-231.83	-231.81	-186.12	-210.08
119	0	EOC: EOC: Other PT Losses	-205.06	-180.68	-180.70	-231.83	-231.81	-186.12	-210.08
119	1	EOC: EOC: Other PT Losses	-205.11	-179.56	-179.58	-233.16	-233.14	-185.26	-210.37
119	2	EOC: EOC: Other PT Losses	-205.11	-178.41	-178.43	-234.41	-234.40	-184.37	-210.60
121	0	EOC: EOC: Other PT Losses	-194.05	-192.83	-192.85	-195.38	-195.37	-193.11	-194.30
121	1	EOC: EOC: Other PT Losses	-194.03	-192.82	-192.83	-195.37	-195.35	-193.09	-194.28
121	2	EOC: EOC: Other PT Losses	-194.05	-192.84	-192.86	-195.38	-195.36	-193.11	-194.30
122	0	EOC: EOC: Other PT Losses	-194.05	-192.84	-192.86	-195.38	-195.36	-193.11	-194.30
122	1	EOC: EOC: Other PT Losses	-194.05	-189.19	-189.21	-199.38	-199.36	-190.28	-195.04
122	2	EOC: EOC: Other PT Losses	-194.06	-185.57	-185.59	-203.38	-203.36	-187.47	-195.80
123	0	EOC: EOC: Other PT Losses	-194.06	-185.57	-185.59	-203.38	-203.36	-187.47	-195.80
123	1	EOC: EOC: Other PT Losses	-194.06	-181.92	-181.94	-207.38	-207.36	-184.64	-196.55
123	2	EOC: EOC: Other PT Losses	-194.07	-178.30	-178.32	-211.38	-211.36	-181.83	-197.32
124	0	EOC: EOC: Other PT Losses	-194.07	-178.30	-178.32	-211.38	-211.36	-181.83	-197.32
124	1	EOC: EOC: Other PT Losses	-194.07	-178.29	-178.31	-211.40	-211.38	-181.82	-197.32
124	2	EOC: EOC: Other PT Losses	-194.07	-178.30	-178.32	-211.39	-211.37	-181.82	-197.32
126	0	EOC: EOC: Other PT Losses	-180.12	-170.81	-170.82	-190.34	-190.32	-172.89	-182.03
126	1	EOC: EOC: Other PT Losses	-180.10	-171.51	-171.53	-189.53	-189.52	-173.43	-181.87
126	2	EOC: EOC: Other PT Losses	-180.06	-172.19	-172.21	-188.69	-188.68	-173.95	-181.68
127	0	EOC: EOC: Other PT Losses	-180.06	-172.19	-172.21	-188.69	-188.68	-173.95	-181.68
127	1	EOC: EOC: Other PT Losses	-179.94	-171.38	-171.40	-189.33	-189.31	-173.29	-181.70
127	2	EOC: EOC: Other PT Losses	-179.81	-170.56	-170.58	-189.97	-189.95	-172.63	-181.72
128	0	EOC: EOC: Other PT Losses	-179.81	-170.56	-170.58	-189.97	-189.95	-172.63	-181.72
128	1	EOC: EOC: Other PT Losses	-179.69	-170.40	-170.42	-189.89	-189.87	-172.48	-181.60
133	0	EOC: EOC: Other PT Losses	-123.36	-117.56	-117.58	-129.72	-129.70	-118.86	-124.55
133	1	EOC: EOC: Other PT Losses	-122.90	-115.98	-116.01	-130.50	-130.48	-117.53	-124.33
133	2	EOC: EOC: Other PT Losses	-122.72	-115.52	-115.54	-130.61	-130.59	-117.13	-124.20
134	0	EOC: EOC: Other PT Losses	-122.72	-115.52	-115.54	-130.61	-130.59	-117.13	-124.20
134	1	EOC: EOC: Other PT Losses	-122.51	-114.47	-114.48	-131.35	-131.33	-116.27	-124.17
134	2	EOC: EOC: Other PT Losses	-122.34	-113.46	-113.48	-132.09	-132.08	-115.45	-124.17
135	0	EOC: EOC: Other PT Losses	-122.34	-113.46	-113.48	-132.09	-132.08	-115.45	-124.17
135	1	EOC: EOC: Other PT Losses	-122.29	-113.91	-113.92	-131.50	-131.49	-115.78	-124.02
135	2	EOC: EOC: Other PT Losses	-122.24	-114.34	-114.36	-130.91	-130.90	-116.11	-123.86
137	0	EOC: EOC: Other PT Losses	-144.54	-95.98	-96.00	-197.86	-197.85	-106.81	-154.54
137	1	EOC: EOC: Other PT Losses	-144.53	-101.05	-101.07	-192.26	-192.24	-110.74	-153.48
137	2	EOC: EOC: Other PT Losses	-144.49	-106.09	-106.11	-186.65	-186.64	-114.65	-152.40
138	0	EOC: EOC: Other PT Losses	-144.49	-106.09	-106.11	-186.65	-186.64	-114.65	-152.40
138	1	EOC: EOC: Other PT Losses	-144.41	-119.86	-119.88	-171.37	-171.35	-125.34	-149.47
138	2	EOC: EOC: Other PT Losses	-144.34	-133.64	-133.66	-156.08	-156.06	-136.03	-146.54
139	0	EOC: EOC: Other PT Losses	-144.34	-133.64	-133.66	-156.08	-156.06	-136.03	-146.54
139	1	EOC: EOC: Other PT Losses	-144.26	-149.76	-149.78	-138.21	-138.20	-148.54	-143.12
139	2	EOC: EOC: Other PT Losses	-144.17	-165.87	-165.88	-120.35	-120.34	-161.04	-139.70

MEMBER STRESSES

DECK & CANOPY MEMBERS
EOC

(-) compression

			PRESTRESS LOAD (PS)						
Member	Station	Result Case	(P/A) @ Centroid (kips/ft²)	Normal Stress @ Point 1 (kips/ft²)	Normal Stress @ Point 2 (kips/ft²)	Normal Stress @ Point 3 (kips/ft²)	Normal Stress @ Point 4 (kips/ft²)	Normal Stress @ Point 5 (kips/ft²)	Normal Stress @ Point 6 (kips/ft²)
140	0	EOC: EOC: Other PT Losses	-144.17	-165.87	-165.88	-120.35	-120.34	-161.04	-139.71
140	1	EOC: EOC: Other PT Losses	-144.16	-168.86	-168.87	-117.04	-117.02	-163.36	-139.07
140	2	EOC: EOC: Other PT Losses	-144.13	-171.83	-171.84	-113.72	-113.70	-165.66	-138.43
142	0	EOC: EOC: Other PT Losses	-151.87	-122.68	-122.69	-183.91	-183.90	-129.19	-157.87
142	1	EOC: EOC: Other PT Losses	-151.82	-127.81	-127.82	-178.18	-178.17	-133.17	-156.76
142	2	EOC: EOC: Other PT Losses	-151.79	-132.98	-132.99	-172.45	-172.44	-137.18	-155.66
143	0	EOC: EOC: Other PT Losses	-151.79	-132.98	-132.99	-172.45	-172.44	-137.18	-155.67
143	1	EOC: EOC: Other PT Losses	-151.71	-142.13	-142.14	-162.24	-162.23	-144.27	-153.69
143	2	EOC: EOC: Other PT Losses	-151.64	-151.29	-151.30	-152.03	-152.02	-151.37	-151.72
144	0	EOC: EOC: Other PT Losses	-151.64	-151.29	-151.30	-152.03	-152.02	-151.37	-151.72
144	1	EOC: EOC: Other PT Losses	-151.57	-162.91	-162.92	-139.11	-139.10	-160.38	-149.23
144	2	EOC: EOC: Other PT Losses	-151.48	-174.51	-174.52	-126.19	-126.18	-169.39	-146.74
145	0	EOC: EOC: Other PT Losses	-151.48	-174.52	-174.53	-126.20	-126.19	-169.39	-146.74
145	1	EOC: EOC: Other PT Losses	-151.47	-176.08	-176.09	-124.44	-124.43	-170.60	-146.40
145	2	EOC: EOC: Other PT Losses	-151.44	-177.63	-177.64	-122.68	-122.67	-171.80	-146.05
147	0	EOC: EOC: Other PT Losses	-159.13	-119.12	-119.13	-203.05	-203.04	-128.04	-167.36
147	1	EOC: EOC: Other PT Losses	-159.08	-126.74	-126.75	-194.59	-194.58	-133.95	-165.74
147	2	EOC: EOC: Other PT Losses	-159.05	-134.39	-134.40	-186.12	-186.11	-139.89	-164.12
148	0	EOC: EOC: Other PT Losses	-159.05	-134.39	-134.40	-186.12	-186.12	-139.89	-164.12
148	1	EOC: EOC: Other PT Losses	-158.97	-146.78	-146.79	-172.35	-172.34	-149.50	-161.48
148	2	EOC: EOC: Other PT Losses	-158.90	-159.20	-159.21	-158.58	-158.57	-159.14	-158.84
149	0	EOC: EOC: Other PT Losses	-158.90	-159.20	-159.21	-158.58	-158.57	-159.14	-158.84
149	1	EOC: EOC: Other PT Losses	-158.82	-174.37	-174.37	-141.76	-141.75	-170.91	-155.62
149	2	EOC: EOC: Other PT Losses	-158.75	-189.53	-189.54	-124.94	-124.94	-182.67	-152.41
150	0	EOC: EOC: Other PT Losses	-158.75	-189.53	-189.54	-124.95	-124.94	-182.68	-152.41
150	1	EOC: EOC: Other PT Losses	-158.73	-192.37	-192.37	-121.80	-121.79	-184.87	-151.81
150	2	EOC: EOC: Other PT Losses	-158.70	-195.18	-195.19	-118.65	-118.64	-187.06	-151.19
152	0	EOC: EOC: Other PT Losses	-166.41	-128.90	-128.90	-207.59	-207.58	-137.26	-174.13
152	1	EOC: EOC: Other PT Losses	-166.36	-136.05	-136.06	-199.63	-199.62	-142.81	-172.60
152	2	EOC: EOC: Other PT Losses	-166.32	-143.23	-143.24	-191.67	-191.67	-148.38	-171.07
153	0	EOC: EOC: Other PT Losses	-166.32	-143.23	-143.24	-191.67	-191.67	-148.38	-171.07
153	1	EOC: EOC: Other PT Losses	-166.24	-153.48	-153.48	-180.25	-180.25	-156.32	-168.87
153	2	EOC: EOC: Other PT Losses	-166.18	-163.76	-163.76	-168.84	-168.84	-164.30	-166.68
154	0	EOC: EOC: Other PT Losses	-166.18	-163.76	-163.76	-168.84	-168.84	-164.30	-166.68
154	1	EOC: EOC: Other PT Losses	-166.10	-176.89	-176.90	-154.25	-154.25	-174.49	-163.88
154	2	EOC: EOC: Other PT Losses	-166.02	-190.03	-190.04	-139.67	-139.66	-184.68	-161.08
155	0	EOC: EOC: Other PT Losses	-166.03	-190.03	-190.04	-139.67	-139.66	-184.68	-161.08
155	1	EOC: EOC: Other PT Losses	-166.01	-192.31	-192.32	-137.13	-137.12	-186.45	-160.59
155	2	EOC: EOC: Other PT Losses	-165.98	-194.58	-194.58	-134.58	-134.58	-188.20	-160.09
157	0	EOC: EOC: Other PT Losses	-174.57	-113.08	-113.09	-242.07	-242.07	-126.79	-187.23
157	1	EOC: EOC: Other PT Losses	-172.60	-116.85	-116.85	-233.82	-233.81	-129.28	-184.08
157	2	EOC: EOC: Other PT Losses	-168.03	-121.54	-121.54	-219.07	-219.07	-131.90	-177.60
158	0	EOC: EOC: Other PT Losses	-168.03	-121.54	-121.54	-219.07	-219.07	-131.90	-177.60
158	1	EOC: EOC: Other PT Losses	-167.88	-181.76	-181.76	-152.65	-152.64	-178.67	-165.03
158	2	EOC: EOC: Other PT Losses	-167.73	-241.87	-241.87	-86.32	-86.32	-225.35	-152.46
159	0	EOC: EOC: Other PT Losses	-167.73	-241.87	-241.87	-86.32	-86.32	-225.35	-152.46
159	1	EOC: EOC: Other PT Losses	-163.33	-255.89	-255.89	-61.70	-61.70	-235.26	-144.27
159	2	EOC: EOC: Other PT Losses	-163.17	-266.24	-266.24	-50.01	-50.01	-243.27	-141.96

MEMBER STRESSES

DECK & CANOPY MEMBERS
EOC

(-) compression

			PT RELAXATION (PS)						
Member	Station	Result Case	(P/A) @ Centroid (kips/ft²)	Normal Stress @ Point 1 (kips/ft²)	Normal Stress @ Point 2 (kips/ft²)	Normal Stress @ Point 3 (kips/ft²)	Normal Stress @ Point 4 (kips/ft²)	Normal Stress @ Point 5 (kips/ft²)	Normal Stress @ Point 6 (kips/ft²)
1	0	EOC: EOC: Other PT Losses	2.08	0.76	0.76	1.89	1.89	1.16	4.08
1	1	EOC: EOC: Other PT Losses	2.09	0.85	0.85	1.91	1.91	1.23	3.94
1	2	EOC: EOC: Other PT Losses	2.09	0.95	0.95	1.92	1.92	1.30	3.79
2	0	EOC: EOC: Other PT Losses	2.08	1.06	1.06	1.93	1.93	1.37	3.61
2	1	EOC: EOC: Other PT Losses	2.08	1.39	1.39	1.98	1.98	1.60	3.12
2	2	EOC: EOC: Other PT Losses	2.08	1.72	1.72	2.03	2.03	1.83	2.62
3	0	EOC: EOC: Other PT Losses	2.09	1.69	1.69	2.03	2.03	1.82	2.69
3	1	EOC: EOC: Other PT Losses	2.73	2.98	2.98	2.77	2.77	2.91	2.35
3	2	EOC: EOC: Other PT Losses	2.74	2.96	2.96	2.77	2.77	2.89	2.42
4	0	EOC: EOC: Other PT Losses	2.74	2.96	2.96	2.77	2.77	2.89	2.42
4	1	EOC: EOC: Other PT Losses	2.77	2.90	2.90	2.79	2.79	2.86	2.57
4	2	EOC: EOC: Other PT Losses	2.80	2.85	2.85	2.81	2.81	2.83	2.73
5	0	EOC: EOC: Other PT Losses	2.80	2.85	2.85	2.81	2.81	2.83	2.73
5	1	EOC: EOC: Other PT Losses	2.83	2.80	2.80	2.82	2.82	2.81	2.88
5	2	EOC: EOC: Other PT Losses	2.86	2.74	2.74	2.84	2.84	2.78	3.03
6	0	EOC: EOC: Other PT Losses	2.86	2.74	2.74	2.84	2.84	2.78	3.03
6	1	EOC: EOC: Other PT Losses	2.86	2.73	2.73	2.84	2.84	2.77	3.05
6	2	EOC: EOC: Other PT Losses	2.86	2.73	2.73	2.84	2.84	2.77	3.07
7	0	EOC: EOC: Other PT Losses	2.87	2.92	2.92	2.87	2.87	2.91	2.78
7	1	EOC: EOC: Other PT Losses	2.87	2.90	2.90	2.87	2.87	2.89	2.81
7	2	EOC: EOC: Other PT Losses	2.87	2.89	2.89	2.87	2.87	2.88	2.84
8	0	EOC: EOC: Other PT Losses	2.90	2.92	2.92	2.90	2.90	2.91	2.87
8	1	EOC: EOC: Other PT Losses	2.91	2.92	2.92	2.92	2.92	2.92	2.90
8	2	EOC: EOC: Other PT Losses	2.92	2.92	2.92	2.92	2.92	2.92	2.93
9	0	EOC: EOC: Other PT Losses	2.92	2.92	2.92	2.92	2.92	2.92	2.93
9	1	EOC: EOC: Other PT Losses	2.95	2.92	2.92	2.95	2.95	2.93	3.00
9	2	EOC: EOC: Other PT Losses	2.98	2.92	2.92	2.98	2.98	2.94	3.07
10	0	EOC: EOC: Other PT Losses	2.98	2.92	2.92	2.98	2.98	2.94	3.07
10	1	EOC: EOC: Other PT Losses	3.01	2.92	2.92	3.00	3.00	2.95	3.15
10	2	EOC: EOC: Other PT Losses	3.04	2.93	2.93	3.03	3.03	2.96	3.22
11	0	EOC: EOC: Other PT Losses	3.04	2.93	2.93	3.03	3.03	2.96	3.22
11	1	EOC: EOC: Other PT Losses	3.05	2.93	2.93	3.03	3.03	2.96	3.23
11	2	EOC: EOC: Other PT Losses	3.05	2.93	2.93	3.03	3.03	2.97	3.24
12	0	EOC: EOC: Other PT Losses	3.06	3.12	3.12	3.07	3.07	3.10	2.97
12	1	EOC: EOC: Other PT Losses	3.06	3.10	3.10	3.07	3.07	3.08	3.01
12	2	EOC: EOC: Other PT Losses	3.06	3.07	3.07	3.06	3.06	3.07	3.05
13	0	EOC: EOC: Other PT Losses	3.10	3.09	3.09	3.10	3.10	3.10	3.11
13	1	EOC: EOC: Other PT Losses	3.11	3.10	3.10	3.11	3.11	3.10	3.13
13	2	EOC: EOC: Other PT Losses	3.12	3.10	3.10	3.12	3.12	3.11	3.16
14	0	EOC: EOC: Other PT Losses	3.12	3.10	3.10	3.12	3.12	3.11	3.16
14	1	EOC: EOC: Other PT Losses	3.16	3.11	3.11	3.15	3.15	3.12	3.23
14	2	EOC: EOC: Other PT Losses	3.19	3.12	3.12	3.18	3.18	3.14	3.30
15	0	EOC: EOC: Other PT Losses	3.19	3.12	3.12	3.18	3.18	3.14	3.30
15	1	EOC: EOC: Other PT Losses	3.22	3.12	3.12	3.21	3.21	3.15	3.38
15	2	EOC: EOC: Other PT Losses	3.26	3.13	3.13	3.24	3.24	3.17	3.45
16	0	EOC: EOC: Other PT Losses	3.26	3.13	3.13	3.24	3.24	3.17	3.45
16	1	EOC: EOC: Other PT Losses	3.26	3.13	3.13	3.24	3.24	3.17	3.46
16	2	EOC: EOC: Other PT Losses	3.27	3.13	3.13	3.25	3.25	3.17	3.47

MEMBER STRESSES

DECK & CANOPY MEMBERS
EOC

(-) compression

			PT RELAXATION (PS)						
Member	Station	Result Case	(P/A) @ Centroid (kips/ft²)	Normal Stress @ Point 1 (kips/ft²)	Normal Stress @ Point 2 (kips/ft²)	Normal Stress @ Point 3 (kips/ft²)	Normal Stress @ Point 4 (kips/ft²)	Normal Stress @ Point 5 (kips/ft²)	Normal Stress @ Point 6 (kips/ft²)
17	0	EOC: EOC: Other PT Losses	3.28	3.30	3.30	3.29	3.29	3.30	3.25
17	1	EOC: EOC: Other PT Losses	3.28	3.27	3.27	3.28	3.28	3.27	3.31
17	2	EOC: EOC: Other PT Losses	3.29	3.24	3.24	3.28	3.28	3.25	3.36
18	0	EOC: EOC: Other PT Losses	3.32	3.25	3.25	3.31	3.31	3.27	3.44
18	1	EOC: EOC: Other PT Losses	3.34	3.25	3.25	3.32	3.32	3.28	3.46
18	2	EOC: EOC: Other PT Losses	3.34	3.25	3.25	3.33	3.33	3.28	3.48
19	0	EOC: EOC: Other PT Losses	3.34	3.25	3.25	3.33	3.33	3.28	3.48
19	1	EOC: EOC: Other PT Losses	3.38	3.27	3.27	3.37	3.37	3.31	3.54
19	2	EOC: EOC: Other PT Losses	3.42	3.29	3.29	3.40	3.40	3.33	3.61
20	0	EOC: EOC: Other PT Losses	3.42	3.29	3.29	3.40	3.40	3.33	3.61
20	1	EOC: EOC: Other PT Losses	3.46	3.31	3.31	3.43	3.43	3.35	3.68
20	2	EOC: EOC: Other PT Losses	3.49	3.32	3.32	3.47	3.47	3.37	3.75
21	0	EOC: EOC: Other PT Losses	3.49	3.32	3.32	3.47	3.47	3.37	3.75
21	1	EOC: EOC: Other PT Losses	3.50	3.33	3.33	3.47	3.47	3.38	3.76
21	2	EOC: EOC: Other PT Losses	3.50	3.33	3.33	3.48	3.48	3.38	3.77
22	0	EOC: EOC: Other PT Losses	3.54	3.44	3.44	3.53	3.53	3.47	3.69
22	1	EOC: EOC: Other PT Losses	3.54	3.40	3.40	3.52	3.52	3.44	3.76
22	2	EOC: EOC: Other PT Losses	3.54	3.36	3.36	3.52	3.52	3.42	3.82
23	0	EOC: EOC: Other PT Losses	3.57	3.31	3.31	3.53	3.53	3.39	3.97
23	1	EOC: EOC: Other PT Losses	3.58	3.33	3.33	3.54	3.54	3.41	3.95
23	2	EOC: EOC: Other PT Losses	3.58	3.35	3.35	3.55	3.55	3.42	3.93
24	0	EOC: EOC: Other PT Losses	3.58	3.35	3.35	3.55	3.55	3.42	3.93
24	1	EOC: EOC: Other PT Losses	3.63	3.49	3.49	3.61	3.61	3.53	3.83
24	2	EOC: EOC: Other PT Losses	3.63	3.60	3.60	3.63	3.63	3.61	3.69
25	0	EOC: EOC: Other PT Losses	3.63	3.60	3.60	3.63	3.63	3.61	3.69
25	1	EOC: EOC: Other PT Losses	3.59	3.65	3.65	3.60	3.60	3.63	3.50
25	2	EOC: EOC: Other PT Losses	3.55	3.71	3.71	3.57	3.57	3.66	3.31
26	0	EOC: EOC: Other PT Losses	3.55	3.71	3.71	3.57	3.57	3.66	3.31
26	1	EOC: EOC: Other PT Losses	3.54	3.72	3.72	3.57	3.57	3.67	3.26
26	2	EOC: EOC: Other PT Losses	3.12	2.43	2.43	3.02	3.02	2.64	4.15
29	0	EOC: EOC: Other PT Losses	1.51	1.20	1.20	1.46	1.46	1.29	1.96
29	1	EOC: EOC: Other PT Losses	1.40	1.50	1.50	1.41	1.41	1.47	1.25
29	2	EOC: EOC: Other PT Losses	1.39	1.48	1.48	1.41	1.41	1.46	1.26
30	0	EOC: EOC: Other PT Losses	1.39	1.48	1.48	1.41	1.41	1.46	1.26
30	1	EOC: EOC: Other PT Losses	1.38	1.42	1.42	1.38	1.38	1.41	1.31
30	2	EOC: EOC: Other PT Losses	1.36	1.36	1.36	1.36	1.36	1.36	1.36
31	0	EOC: EOC: Other PT Losses	1.36	1.36	1.36	1.36	1.36	1.36	1.36
31	1	EOC: EOC: Other PT Losses	1.34	1.30	1.30	1.34	1.34	1.31	1.40
31	2	EOC: EOC: Other PT Losses	1.33	1.24	1.24	1.31	1.31	1.27	1.45
32	0	EOC: EOC: Other PT Losses	1.33	1.24	1.24	1.31	1.31	1.27	1.45
32	1	EOC: EOC: Other PT Losses	1.32	1.23	1.23	1.31	1.31	1.26	1.46
32	2	EOC: EOC: Other PT Losses	1.32	1.22	1.22	1.31	1.31	1.25	1.47
33	0	EOC: EOC: Other PT Losses	1.28	1.17	1.17	1.26	1.26	1.20	1.45
33	1	EOC: EOC: Other PT Losses	1.28	1.19	1.19	1.27	1.27	1.22	1.41
33	2	EOC: EOC: Other PT Losses	1.28	1.22	1.22	1.27	1.27	1.24	1.37
34	0	EOC: EOC: Other PT Losses	1.28	1.12	1.12	1.25	1.25	1.17	1.51
34	1	EOC: EOC: Other PT Losses	1.28	1.13	1.13	1.25	1.25	1.17	1.49
34	2	EOC: EOC: Other PT Losses	1.27	1.14	1.14	1.25	1.25	1.18	1.47

MEMBER STRESSES

DECK & CANOPY MEMBERS
EOC

(-) compression

			PT RELAXATION (PS)						
Member	Station	Result Case	(P/A) @ Centroid (kips/ft²)	Normal Stress @ Point 1 (kips/ft²)	Normal Stress @ Point 2 (kips/ft²)	Normal Stress @ Point 3 (kips/ft²)	Normal Stress @ Point 4 (kips/ft²)	Normal Stress @ Point 5 (kips/ft²)	Normal Stress @ Point 6 (kips/ft²)
35	0	EOC: EOC: Other PT Losses	1.27	1.14	1.14	1.25	1.25	1.18	1.47
35	1	EOC: EOC: Other PT Losses	1.27	1.18	1.18	1.25	1.25	1.20	1.40
35	2	EOC: EOC: Other PT Losses	1.26	1.21	1.21	1.26	1.26	1.23	1.33
36	0	EOC: EOC: Other PT Losses	1.26	1.21	1.21	1.26	1.26	1.23	1.33
36	1	EOC: EOC: Other PT Losses	1.26	1.25	1.25	1.26	1.26	1.25	1.27
36	2	EOC: EOC: Other PT Losses	1.25	1.29	1.29	1.26	1.26	1.28	1.20
37	0	EOC: EOC: Other PT Losses	1.25	1.29	1.29	1.26	1.26	1.28	1.20
37	1	EOC: EOC: Other PT Losses	1.25	1.31	1.31	1.26	1.26	1.29	1.16
37	2	EOC: EOC: Other PT Losses	1.25	1.33	1.33	1.26	1.26	1.30	1.13
38	0	EOC: EOC: Other PT Losses	1.21	1.25	1.25	1.21	1.21	1.23	1.14
38	1	EOC: EOC: Other PT Losses	1.20	1.27	1.27	1.21	1.21	1.25	1.11
38	2	EOC: EOC: Other PT Losses	1.20	1.29	1.29	1.22	1.22	1.27	1.07
39	0	EOC: EOC: Other PT Losses	1.21	1.18	1.18	1.20	1.20	1.19	1.25
39	1	EOC: EOC: Other PT Losses	1.21	1.19	1.19	1.20	1.20	1.19	1.24
39	2	EOC: EOC: Other PT Losses	1.21	1.19	1.19	1.20	1.20	1.20	1.23
40	0	EOC: EOC: Other PT Losses	1.21	1.19	1.19	1.20	1.20	1.20	1.23
40	1	EOC: EOC: Other PT Losses	1.20	1.21	1.21	1.20	1.20	1.21	1.19
40	2	EOC: EOC: Other PT Losses	1.20	1.23	1.23	1.20	1.20	1.22	1.15
41	0	EOC: EOC: Other PT Losses	1.20	1.23	1.23	1.20	1.20	1.22	1.15
41	1	EOC: EOC: Other PT Losses	1.19	1.25	1.25	1.20	1.20	1.23	1.10
41	2	EOC: EOC: Other PT Losses	1.19	1.27	1.27	1.20	1.20	1.24	1.06
42	0	EOC: EOC: Other PT Losses	1.19	1.27	1.27	1.20	1.20	1.24	1.06
42	1	EOC: EOC: Other PT Losses	1.18	1.28	1.28	1.20	1.20	1.25	1.04
42	2	EOC: EOC: Other PT Losses	1.18	1.29	1.29	1.20	1.20	1.26	1.01
43	0	EOC: EOC: Other PT Losses	1.14	1.22	1.22	1.15	1.15	1.20	1.02
43	1	EOC: EOC: Other PT Losses	1.14	1.24	1.24	1.16	1.16	1.21	0.99
43	2	EOC: EOC: Other PT Losses	1.14	1.26	1.26	1.16	1.16	1.22	0.96
44	0	EOC: EOC: Other PT Losses	1.15	1.15	1.15	1.15	1.15	1.15	1.15
44	1	EOC: EOC: Other PT Losses	1.15	1.16	1.16	1.15	1.15	1.15	1.13
44	2	EOC: EOC: Other PT Losses	1.14	1.16	1.16	1.15	1.15	1.16	1.11
45	0	EOC: EOC: Other PT Losses	1.14	1.16	1.16	1.15	1.15	1.16	1.11
45	1	EOC: EOC: Other PT Losses	1.14	1.19	1.19	1.15	1.15	1.17	1.07
45	2	EOC: EOC: Other PT Losses	1.14	1.21	1.21	1.15	1.15	1.19	1.02
46	0	EOC: EOC: Other PT Losses	1.14	1.21	1.21	1.15	1.15	1.19	1.02
46	1	EOC: EOC: Other PT Losses	1.13	1.23	1.23	1.15	1.15	1.20	0.98
46	2	EOC: EOC: Other PT Losses	1.13	1.25	1.25	1.15	1.15	1.22	0.93
47	0	EOC: EOC: Other PT Losses	1.13	1.25	1.25	1.15	1.15	1.22	0.93
47	1	EOC: EOC: Other PT Losses	1.12	1.27	1.27	1.15	1.15	1.23	0.90
47	2	EOC: EOC: Other PT Losses	1.12	1.29	1.29	1.14	1.14	1.24	0.87
48	0	EOC: EOC: Other PT Losses	1.09	1.23	1.23	1.11	1.11	1.19	0.88
48	1	EOC: EOC: Other PT Losses	1.09	1.24	1.24	1.11	1.11	1.20	0.86
48	2	EOC: EOC: Other PT Losses	1.09	1.26	1.26	1.12	1.12	1.21	0.84
49	0	EOC: EOC: Other PT Losses	1.10	1.17	1.17	1.11	1.11	1.15	1.00
49	1	EOC: EOC: Other PT Losses	1.10	1.16	1.16	1.11	1.11	1.14	1.00
49	2	EOC: EOC: Other PT Losses	1.10	1.16	1.16	1.10	1.10	1.14	1.00
50	0	EOC: EOC: Other PT Losses	1.10	1.16	1.16	1.10	1.10	1.14	1.00
50	1	EOC: EOC: Other PT Losses	1.09	1.16	1.16	1.10	1.10	1.14	0.99
50	2	EOC: EOC: Other PT Losses	1.09	1.15	1.15	1.10	1.10	1.13	0.99

MEMBER STRESSES

DECK & CANOPY MEMBERS
EOC

(-) compression

			PT RELAXATION (PS)						
Member	Station	Result Case	(P/A) @ Centroid (kips/ft²)	Normal Stress @ Point 1 (kips/ft²)	Normal Stress @ Point 2 (kips/ft²)	Normal Stress @ Point 3 (kips/ft²)	Normal Stress @ Point 4 (kips/ft²)	Normal Stress @ Point 5 (kips/ft²)	Normal Stress @ Point 6 (kips/ft²)
51	0	EOC: EOC: Other PT Losses	1.09	1.15	1.15	1.10	1.10	1.13	0.99
51	1	EOC: EOC: Other PT Losses	1.08	1.15	1.15	1.09	1.09	1.13	0.99
51	2	EOC: EOC: Other PT Losses	1.08	1.14	1.14	1.09	1.09	1.12	0.98
52	0	EOC: EOC: Other PT Losses	1.08	1.14	1.14	1.09	1.09	1.12	0.98
52	1	EOC: EOC: Other PT Losses	1.08	1.14	1.14	1.09	1.09	1.12	0.98
52	2	EOC: EOC: Other PT Losses	1.05	1.11	1.11	1.06	1.06	1.09	0.96
60	0	EOC: EOC: Other PT Losses	0.00	0.00	0.00	0.00	0.00	0.00	0.00
60	1	EOC: EOC: Other PT Losses	2.08	-0.08	-0.08	1.77	1.77	0.58	5.32
60	2	EOC: EOC: Other PT Losses	2.08	0.51	0.51	1.85	1.85	0.99	4.44
101	0	EOC: EOC: Other PT Losses	1.17	2.90	2.90	-0.73	-0.73	2.51	0.81
101	1	EOC: EOC: Other PT Losses	1.32	2.28	2.28	0.27	0.27	2.07	1.13
101	2	EOC: EOC: Other PT Losses	1.64	2.54	2.54	0.65	0.65	2.34	1.45
102	0	EOC: EOC: Other PT Losses	1.64	2.54	2.54	0.65	0.65	2.34	1.45
102	1	EOC: EOC: Other PT Losses	2.06	3.39	3.39	0.60	0.60	3.10	1.79
102	2	EOC: EOC: Other PT Losses	2.23	2.26	2.26	2.20	2.20	2.25	2.22
103	0	EOC: EOC: Other PT Losses	2.23	2.26	2.26	2.20	2.20	2.25	2.22
103	1	EOC: EOC: Other PT Losses	2.94	2.67	2.67	3.23	3.23	2.73	2.99
103	2	EOC: EOC: Other PT Losses	2.98	2.69	2.69	3.29	3.29	2.75	3.03
104	0	EOC: EOC: Other PT Losses	2.98	2.69	2.69	3.29	3.29	2.75	3.03
104	1	EOC: EOC: Other PT Losses	2.99	2.72	2.72	3.28	3.28	2.78	3.04
104	2	EOC: EOC: Other PT Losses	3.00	2.75	2.75	3.27	3.27	2.80	3.05
106	0	EOC: EOC: Other PT Losses	2.90	3.48	3.48	2.26	2.26	3.35	2.78
106	1	EOC: EOC: Other PT Losses	2.91	3.43	3.43	2.34	2.34	3.31	2.80
106	2	EOC: EOC: Other PT Losses	2.91	3.37	3.37	2.41	2.41	3.27	2.82
107	0	EOC: EOC: Other PT Losses	2.91	3.37	3.37	2.41	2.41	3.27	2.82
107	1	EOC: EOC: Other PT Losses	2.94	3.18	3.18	2.67	2.67	3.13	2.89
107	2	EOC: EOC: Other PT Losses	2.97	2.99	2.99	2.94	2.94	2.98	2.96
108	0	EOC: EOC: Other PT Losses	2.97	2.99	2.99	2.94	2.94	2.98	2.96
108	1	EOC: EOC: Other PT Losses	3.00	2.78	2.78	3.24	3.24	2.83	3.04
108	2	EOC: EOC: Other PT Losses	3.02	2.56	2.56	3.53	3.53	2.66	3.12
109	0	EOC: EOC: Other PT Losses	3.02	2.56	2.56	3.53	3.53	2.66	3.12
109	1	EOC: EOC: Other PT Losses	3.03	2.50	2.50	3.61	3.61	2.62	3.14
109	2	EOC: EOC: Other PT Losses	3.04	2.45	2.45	3.69	3.69	2.58	3.16
111	0	EOC: EOC: Other PT Losses	2.90	3.34	3.34	2.42	2.42	3.24	2.81
111	1	EOC: EOC: Other PT Losses	2.91	3.30	3.30	2.48	2.48	3.21	2.83
111	2	EOC: EOC: Other PT Losses	2.91	3.25	3.25	2.54	2.54	3.18	2.84
112	0	EOC: EOC: Other PT Losses	2.91	3.25	3.25	2.54	2.54	3.18	2.84
112	1	EOC: EOC: Other PT Losses	2.94	3.09	3.09	2.78	2.78	3.06	2.91
112	2	EOC: EOC: Other PT Losses	2.97	2.93	2.93	3.02	3.02	2.94	2.98
113	0	EOC: EOC: Other PT Losses	2.97	2.93	2.93	3.02	3.02	2.94	2.98
113	1	EOC: EOC: Other PT Losses	3.00	2.74	2.74	3.29	3.29	2.80	3.05
113	2	EOC: EOC: Other PT Losses	3.03	2.55	2.55	3.55	3.55	2.66	3.13
114	0	EOC: EOC: Other PT Losses	3.03	2.55	2.55	3.55	3.55	2.66	3.13
114	1	EOC: EOC: Other PT Losses	3.04	2.51	2.51	3.61	3.61	2.63	3.15
114	2	EOC: EOC: Other PT Losses	3.05	2.48	2.48	3.67	3.67	2.61	3.16
116	0	EOC: EOC: Other PT Losses	2.87	3.14	3.14	2.57	2.57	3.08	2.81
116	1	EOC: EOC: Other PT Losses	2.87	3.11	3.11	2.62	2.62	3.05	2.82
116	2	EOC: EOC: Other PT Losses	2.88	3.08	3.08	2.66	2.66	3.03	2.84

MEMBER STRESSES

DECK & CANOPY MEMBERS
EOC

(-) compression

			PT RELAXATION (PS)						
Member	Station	Result Case	(P/A) @ Centroid (kips/ft²)	Normal Stress @ Point 1 (kips/ft²)	Normal Stress @ Point 2 (kips/ft²)	Normal Stress @ Point 3 (kips/ft²)	Normal Stress @ Point 4 (kips/ft²)	Normal Stress @ Point 5 (kips/ft²)	Normal Stress @ Point 6 (kips/ft²)
117	0	EOC: EOC: Other PT Losses	2.88	3.08	3.08	2.66	2.66	3.03	2.84
117	1	EOC: EOC: Other PT Losses	2.91	2.96	2.96	2.85	2.85	2.95	2.90
117	2	EOC: EOC: Other PT Losses	2.94	2.85	2.85	3.04	3.04	2.87	2.96
118	0	EOC: EOC: Other PT Losses	2.94	2.85	2.85	3.04	3.04	2.87	2.96
118	1	EOC: EOC: Other PT Losses	2.97	2.71	2.71	3.25	3.25	2.77	3.02
118	2	EOC: EOC: Other PT Losses	3.00	2.58	2.58	3.47	3.47	2.67	3.09
119	0	EOC: EOC: Other PT Losses	3.00	2.58	2.58	3.47	3.47	2.67	3.09
119	1	EOC: EOC: Other PT Losses	3.01	2.56	2.56	3.49	3.49	2.66	3.10
119	2	EOC: EOC: Other PT Losses	3.01	2.55	2.55	3.51	3.51	2.65	3.10
121	0	EOC: EOC: Other PT Losses	2.79	2.79	2.79	2.79	2.79	2.79	2.79
121	1	EOC: EOC: Other PT Losses	2.78	2.78	2.78	2.79	2.79	2.78	2.79
121	2	EOC: EOC: Other PT Losses	2.79	2.78	2.78	2.79	2.79	2.78	2.79
122	0	EOC: EOC: Other PT Losses	2.79	2.78	2.78	2.79	2.79	2.78	2.79
122	1	EOC: EOC: Other PT Losses	2.79	2.70	2.70	2.88	2.88	2.72	2.81
122	2	EOC: EOC: Other PT Losses	2.79	2.63	2.63	2.97	2.97	2.66	2.83
123	0	EOC: EOC: Other PT Losses	2.79	2.63	2.63	2.97	2.97	2.66	2.83
123	1	EOC: EOC: Other PT Losses	2.79	2.55	2.55	3.06	3.06	2.60	2.85
123	2	EOC: EOC: Other PT Losses	2.80	2.48	2.48	3.15	3.15	2.55	2.87
124	0	EOC: EOC: Other PT Losses	2.80	2.48	2.48	3.15	3.15	2.55	2.87
124	1	EOC: EOC: Other PT Losses	2.80	2.47	2.47	3.16	3.16	2.55	2.87
124	2	EOC: EOC: Other PT Losses	2.80	2.47	2.47	3.16	3.16	2.54	2.87
126	0	EOC: EOC: Other PT Losses	2.53	2.35	2.35	2.73	2.73	2.39	2.57
126	1	EOC: EOC: Other PT Losses	2.53	2.36	2.36	2.71	2.71	2.40	2.56
126	2	EOC: EOC: Other PT Losses	2.52	2.37	2.37	2.69	2.69	2.41	2.56
127	0	EOC: EOC: Other PT Losses	2.52	2.37	2.37	2.69	2.69	2.41	2.56
127	1	EOC: EOC: Other PT Losses	2.51	2.36	2.36	2.67	2.67	2.39	2.54
127	2	EOC: EOC: Other PT Losses	2.50	2.35	2.35	2.66	2.66	2.38	2.53
128	0	EOC: EOC: Other PT Losses	2.50	2.35	2.35	2.66	2.66	2.38	2.53
128	1	EOC: EOC: Other PT Losses	2.48	2.35	2.35	2.63	2.63	2.38	2.51
133	0	EOC: EOC: Other PT Losses	1.70	1.52	1.52	1.91	1.91	1.56	1.74
133	1	EOC: EOC: Other PT Losses	1.66	1.52	1.52	1.81	1.81	1.55	1.69
133	2	EOC: EOC: Other PT Losses	1.64	1.55	1.55	1.73	1.73	1.57	1.65
134	0	EOC: EOC: Other PT Losses	1.64	1.55	1.55	1.73	1.73	1.57	1.65
134	1	EOC: EOC: Other PT Losses	1.61	1.57	1.57	1.66	1.66	1.58	1.62
134	2	EOC: EOC: Other PT Losses	1.59	1.59	1.59	1.60	1.60	1.59	1.59
135	0	EOC: EOC: Other PT Losses	1.59	1.59	1.59	1.60	1.60	1.59	1.59
135	1	EOC: EOC: Other PT Losses	1.59	1.61	1.61	1.57	1.57	1.60	1.58
135	2	EOC: EOC: Other PT Losses	1.58	1.62	1.62	1.54	1.54	1.61	1.57
137	0	EOC: EOC: Other PT Losses	1.99	1.30	1.30	2.75	2.75	1.46	2.13
137	1	EOC: EOC: Other PT Losses	1.99	1.38	1.38	2.66	2.66	1.51	2.12
137	2	EOC: EOC: Other PT Losses	1.99	1.45	1.45	2.57	2.57	1.57	2.10
138	0	EOC: EOC: Other PT Losses	1.99	1.45	1.45	2.57	2.57	1.57	2.10
138	1	EOC: EOC: Other PT Losses	1.98	1.65	1.65	2.33	2.33	1.73	2.04
138	2	EOC: EOC: Other PT Losses	1.97	1.86	1.86	2.09	2.09	1.88	1.99
139	0	EOC: EOC: Other PT Losses	1.97	1.86	1.86	2.09	2.09	1.88	1.99
139	1	EOC: EOC: Other PT Losses	1.96	2.10	2.10	1.81	1.81	2.07	1.93
139	2	EOC: EOC: Other PT Losses	1.95	2.33	2.33	1.53	1.53	2.25	1.87

MEMBER STRESSES

DECK & CANOPY MEMBERS
EOC

(-) compression

			PT RELAXATION (PS)						
Member	Station	Result Case	(P/A) @ Centroid (kips/ft²)	Normal Stress @ Point 1 (kips/ft²)	Normal Stress @ Point 2 (kips/ft²)	Normal Stress @ Point 3 (kips/ft²)	Normal Stress @ Point 4 (kips/ft²)	Normal Stress @ Point 5 (kips/ft²)	Normal Stress @ Point 6 (kips/ft²)
140	0	EOC: EOC: Other PT Losses	1.95	2.33	2.33	1.53	1.53	2.25	1.87
140	1	EOC: EOC: Other PT Losses	1.95	2.38	2.38	1.48	1.48	2.28	1.86
140	2	EOC: EOC: Other PT Losses	1.95	2.42	2.42	1.42	1.42	2.32	1.85
142	0	EOC: EOC: Other PT Losses	2.08	1.66	1.66	2.55	2.55	1.75	2.17
142	1	EOC: EOC: Other PT Losses	2.08	1.73	1.73	2.45	2.45	1.81	2.15
142	2	EOC: EOC: Other PT Losses	2.07	1.81	1.81	2.36	2.36	1.87	2.13
143	0	EOC: EOC: Other PT Losses	2.07	1.81	1.81	2.36	2.36	1.87	2.13
143	1	EOC: EOC: Other PT Losses	2.06	1.95	1.95	2.19	2.19	1.98	2.09
143	2	EOC: EOC: Other PT Losses	2.06	2.09	2.09	2.02	2.02	2.09	2.05
144	0	EOC: EOC: Other PT Losses	2.06	2.09	2.09	2.02	2.02	2.09	2.05
144	1	EOC: EOC: Other PT Losses	2.05	2.27	2.27	1.81	1.81	2.22	2.00
144	2	EOC: EOC: Other PT Losses	2.04	2.44	2.44	1.60	1.60	2.35	1.96
145	0	EOC: EOC: Other PT Losses	2.04	2.44	2.44	1.60	1.60	2.35	1.96
145	1	EOC: EOC: Other PT Losses	2.04	2.47	2.47	1.56	1.56	2.37	1.95
145	2	EOC: EOC: Other PT Losses	2.03	2.49	2.49	1.53	1.53	2.39	1.94
147	0	EOC: EOC: Other PT Losses	2.15	1.68	1.68	2.67	2.67	1.79	2.25
147	1	EOC: EOC: Other PT Losses	2.15	1.78	1.78	2.56	2.56	1.86	2.23
147	2	EOC: EOC: Other PT Losses	2.15	1.88	1.88	2.44	2.44	1.94	2.20
148	0	EOC: EOC: Other PT Losses	2.15	1.88	1.88	2.44	2.44	1.94	2.20
148	1	EOC: EOC: Other PT Losses	2.14	2.03	2.03	2.25	2.25	2.06	2.16
148	2	EOC: EOC: Other PT Losses	2.13	2.19	2.19	2.06	2.06	2.18	2.12
149	0	EOC: EOC: Other PT Losses	2.13	2.19	2.19	2.06	2.06	2.18	2.12
149	1	EOC: EOC: Other PT Losses	2.12	2.39	2.39	1.83	1.83	2.33	2.07
149	2	EOC: EOC: Other PT Losses	2.11	2.58	2.58	1.60	1.60	2.47	2.02
150	0	EOC: EOC: Other PT Losses	2.11	2.58	2.58	1.60	1.60	2.47	2.02
150	1	EOC: EOC: Other PT Losses	2.11	2.62	2.62	1.56	1.55	2.50	2.01
150	2	EOC: EOC: Other PT Losses	2.11	2.65	2.65	1.51	1.51	2.53	1.99
152	0	EOC: EOC: Other PT Losses	2.21	1.87	1.87	2.57	2.57	1.95	2.28
152	1	EOC: EOC: Other PT Losses	2.20	1.95	1.95	2.47	2.47	2.01	2.25
152	2	EOC: EOC: Other PT Losses	2.20	2.04	2.04	2.37	2.37	2.07	2.23
153	0	EOC: EOC: Other PT Losses	2.20	2.04	2.04	2.37	2.37	2.07	2.23
153	1	EOC: EOC: Other PT Losses	2.19	2.15	2.15	2.23	2.23	2.16	2.20
153	2	EOC: EOC: Other PT Losses	2.18	2.27	2.27	2.08	2.08	2.25	2.16
154	0	EOC: EOC: Other PT Losses	2.18	2.27	2.27	2.08	2.08	2.25	2.16
154	1	EOC: EOC: Other PT Losses	2.17	2.42	2.42	1.90	1.90	2.37	2.12
154	2	EOC: EOC: Other PT Losses	2.16	2.58	2.58	1.71	1.71	2.48	2.08
155	0	EOC: EOC: Other PT Losses	2.16	2.58	2.58	1.71	1.71	2.48	2.08
155	1	EOC: EOC: Other PT Losses	2.16	2.60	2.60	1.68	1.68	2.50	2.07
155	2	EOC: EOC: Other PT Losses	2.16	2.62	2.62	1.65	1.65	2.52	2.06
157	0	EOC: EOC: Other PT Losses	2.24	1.93	1.93	2.59	2.59	2.00	2.31
157	1	EOC: EOC: Other PT Losses	2.11	1.89	1.89	2.36	2.36	1.94	2.16
157	2	EOC: EOC: Other PT Losses	1.71	1.22	1.22	2.25	2.25	1.33	1.81
158	0	EOC: EOC: Other PT Losses	1.71	1.22	1.22	2.25	2.25	1.33	1.81
158	1	EOC: EOC: Other PT Losses	1.70	1.93	1.93	1.45	1.45	1.88	1.65
158	2	EOC: EOC: Other PT Losses	1.69	2.62	2.62	0.65	0.65	2.42	1.49
159	0	EOC: EOC: Other PT Losses	1.69	2.62	2.62	0.66	0.66	2.42	1.49
159	1	EOC: EOC: Other PT Losses	1.25	1.87	1.87	0.58	0.58	1.73	1.13
159	2	EOC: EOC: Other PT Losses	1.24	2.05	2.05	0.35	0.35	1.87	1.07

MEMBER STRESSES

DECK & CANOPY MEMBERS
EOC

(-) compression

			OTHER PT LOSSES (PS)						
Member	Station	Result Case	(P/A) @ Centroid (kips/ft²)	Normal Stress @ Point 1 (kips/ft²)	Normal Stress @ Point 2 (kips/ft²)	Normal Stress @ Point 3 (kips/ft²)	Normal Stress @ Point 4 (kips/ft²)	Normal Stress @ Point 5 (kips/ft²)	Normal Stress @ Point 6 (kips/ft²)
1	0	EOC: EOC: Other PT Losses	5.90	2.67	2.67	5.43	5.43	3.65	10.76
1	1	EOC: EOC: Other PT Losses	7.30	3.35	3.35	6.72	6.72	4.55	13.23
1	2	EOC: EOC: Other PT Losses	7.57	3.78	3.78	7.02	7.02	4.93	13.26
2	0	EOC: EOC: Other PT Losses	7.55	4.04	4.04	7.03	7.03	5.11	12.82
2	1	EOC: EOC: Other PT Losses	7.82	5.36	5.36	7.46	7.46	6.11	11.51
2	2	EOC: EOC: Other PT Losses	7.25	6.21	6.21	7.10	7.10	6.53	8.82
3	0	EOC: EOC: Other PT Losses	7.32	6.07	6.07	7.14	7.14	6.45	9.19
3	1	EOC: EOC: Other PT Losses	6.79	7.83	7.83	6.94	6.94	7.52	5.23
3	2	EOC: EOC: Other PT Losses	6.93	7.87	7.87	7.07	7.07	7.58	5.52
4	0	EOC: EOC: Other PT Losses	6.93	7.87	7.87	7.07	7.07	7.58	5.52
4	1	EOC: EOC: Other PT Losses	7.07	7.79	7.79	7.18	7.18	7.57	6.00
4	2	EOC: EOC: Other PT Losses	7.16	7.65	7.65	7.23	7.23	7.50	6.41
5	0	EOC: EOC: Other PT Losses	7.16	7.65	7.65	7.23	7.23	7.50	6.41
5	1	EOC: EOC: Other PT Losses	7.25	7.52	7.52	7.29	7.29	7.44	6.83
5	2	EOC: EOC: Other PT Losses	7.26	7.31	7.31	7.27	7.26	7.29	7.18
6	0	EOC: EOC: Other PT Losses	7.26	7.31	7.31	7.27	7.26	7.29	7.18
6	1	EOC: EOC: Other PT Losses	7.27	7.29	7.29	7.27	7.27	7.29	7.23
6	2	EOC: EOC: Other PT Losses	7.32	7.31	7.31	7.32	7.32	7.31	7.33
7	0	EOC: EOC: Other PT Losses	7.33	8.00	8.00	7.42	7.42	7.80	6.31
7	1	EOC: EOC: Other PT Losses	7.38	7.98	7.98	7.46	7.46	7.80	6.47
7	2	EOC: EOC: Other PT Losses	7.23	7.76	7.76	7.30	7.30	7.60	6.42
8	0	EOC: EOC: Other PT Losses	7.34	7.85	7.85	7.42	7.42	7.70	6.57
8	1	EOC: EOC: Other PT Losses	7.19	7.67	7.67	7.26	7.26	7.52	6.48
8	2	EOC: EOC: Other PT Losses	7.22	7.66	7.66	7.29	7.29	7.53	6.56
9	0	EOC: EOC: Other PT Losses	7.22	7.66	7.66	7.29	7.29	7.53	6.56
9	1	EOC: EOC: Other PT Losses	7.25	7.60	7.60	7.30	7.30	7.49	6.73
9	2	EOC: EOC: Other PT Losses	7.29	7.54	7.54	7.33	7.33	7.47	6.91
10	0	EOC: EOC: Other PT Losses	7.29	7.54	7.54	7.33	7.33	7.47	6.91
10	1	EOC: EOC: Other PT Losses	7.33	7.49	7.49	7.35	7.35	7.44	7.09
10	2	EOC: EOC: Other PT Losses	7.34	7.40	7.40	7.35	7.35	7.38	7.24
11	0	EOC: EOC: Other PT Losses	7.34	7.40	7.40	7.35	7.35	7.38	7.24
11	1	EOC: EOC: Other PT Losses	7.35	7.40	7.40	7.35	7.35	7.38	7.27
11	2	EOC: EOC: Other PT Losses	7.35	7.39	7.39	7.36	7.36	7.38	7.29
12	0	EOC: EOC: Other PT Losses	7.38	8.15	8.15	7.49	7.49	7.91	6.22
12	1	EOC: EOC: Other PT Losses	7.39	8.05	8.05	7.49	7.49	7.85	6.39
12	2	EOC: EOC: Other PT Losses	7.53	8.09	8.09	7.61	7.61	7.92	6.68
13	0	EOC: EOC: Other PT Losses	7.67	8.14	8.14	7.74	7.74	8.00	6.97
13	1	EOC: EOC: Other PT Losses	7.81	8.24	8.24	7.88	7.88	8.11	7.17
13	2	EOC: EOC: Other PT Losses	7.82	8.22	8.22	7.88	7.88	8.10	7.23
14	0	EOC: EOC: Other PT Losses	7.82	8.22	8.22	7.88	7.88	8.10	7.23
14	1	EOC: EOC: Other PT Losses	7.83	8.11	8.11	7.87	7.87	8.03	7.41
14	2	EOC: EOC: Other PT Losses	7.83	8.00	8.00	7.85	7.85	7.95	7.57
15	0	EOC: EOC: Other PT Losses	7.83	8.00	8.00	7.85	7.85	7.95	7.57
15	1	EOC: EOC: Other PT Losses	7.83	7.88	7.88	7.84	7.84	7.87	7.74
15	2	EOC: EOC: Other PT Losses	7.83	7.77	7.77	7.82	7.82	7.79	7.92
16	0	EOC: EOC: Other PT Losses	7.83	7.77	7.77	7.82	7.82	7.79	7.92
16	1	EOC: EOC: Other PT Losses	7.83	7.76	7.76	7.82	7.82	7.79	7.94
16	2	EOC: EOC: Other PT Losses	7.89	7.81	7.81	7.88	7.88	7.83	8.02

MEMBER STRESSES

DECK & CANOPY MEMBERS
EOC

(-) compression

			OTHER PT LOSSES (PS)						
Member	Station	Result Case	(P/A) @ Centroid (kips/ft²)	Normal Stress @ Point 1 (kips/ft²)	Normal Stress @ Point 2 (kips/ft²)	Normal Stress @ Point 3 (kips/ft²)	Normal Stress @ Point 4 (kips/ft²)	Normal Stress @ Point 5 (kips/ft²)	Normal Stress @ Point 6 (kips/ft²)
17	0	EOC: EOC: Other PT Losses	7.95	8.43	8.43	8.02	8.02	8.28	7.23
17	1	EOC: EOC: Other PT Losses	8.00	8.37	8.37	8.06	8.06	8.26	7.46
17	2	EOC: EOC: Other PT Losses	8.33	8.57	8.57	8.36	8.36	8.50	7.96
18	0	EOC: EOC: Other PT Losses	8.45	8.56	8.56	8.47	8.47	8.53	8.29
18	1	EOC: EOC: Other PT Losses	8.77	8.86	8.86	8.79	8.79	8.83	8.65
18	2	EOC: EOC: Other PT Losses	8.78	8.84	8.84	8.78	8.78	8.82	8.68
19	0	EOC: EOC: Other PT Losses	8.78	8.84	8.84	8.78	8.78	8.82	8.68
19	1	EOC: EOC: Other PT Losses	8.78	8.75	8.75	8.77	8.77	8.76	8.82
19	2	EOC: EOC: Other PT Losses	8.75	8.63	8.63	8.73	8.73	8.66	8.93
20	0	EOC: EOC: Other PT Losses	8.75	8.63	8.63	8.73	8.73	8.66	8.93
20	1	EOC: EOC: Other PT Losses	8.72	8.51	8.51	8.69	8.69	8.57	9.03
20	2	EOC: EOC: Other PT Losses	8.71	8.41	8.41	8.67	8.67	8.50	9.16
21	0	EOC: EOC: Other PT Losses	8.71	8.41	8.41	8.67	8.67	8.50	9.16
21	1	EOC: EOC: Other PT Losses	8.70	8.39	8.39	8.66	8.66	8.48	9.18
21	2	EOC: EOC: Other PT Losses	8.95	8.62	8.62	8.90	8.90	8.72	9.45
22	0	EOC: EOC: Other PT Losses	9.05	8.97	8.97	9.04	9.04	9.00	9.18
22	1	EOC: EOC: Other PT Losses	9.30	9.10	9.10	9.27	9.27	9.16	9.60
22	2	EOC: EOC: Other PT Losses	9.61	9.28	9.28	9.56	9.56	9.38	10.09
23	0	EOC: EOC: Other PT Losses	9.69	9.10	9.10	9.60	9.60	9.28	10.57
23	1	EOC: EOC: Other PT Losses	10.00	9.44	9.45	9.92	9.92	9.61	10.83
23	2	EOC: EOC: Other PT Losses	10.00	9.48	9.48	9.92	9.92	9.64	10.78
24	0	EOC: EOC: Other PT Losses	10.00	9.48	9.48	9.92	9.92	9.64	10.78
24	1	EOC: EOC: Other PT Losses	10.00	9.70	9.70	9.96	9.96	9.79	10.47
24	2	EOC: EOC: Other PT Losses	9.96	9.87	9.87	9.95	9.95	9.89	10.10
25	0	EOC: EOC: Other PT Losses	9.96	9.87	9.87	9.95	9.95	9.89	10.10
25	1	EOC: EOC: Other PT Losses	9.92	10.04	10.04	9.94	9.94	10.00	9.74
25	2	EOC: EOC: Other PT Losses	9.90	10.23	10.23	9.95	9.95	10.13	9.41
26	0	EOC: EOC: Other PT Losses	9.90	10.23	10.23	9.95	9.95	10.13	9.41
26	1	EOC: EOC: Other PT Losses	9.89	10.27	10.27	9.94	9.94	10.16	9.31
26	2	EOC: EOC: Other PT Losses	8.67	6.67	6.67	8.38	8.38	7.28	11.67
29	0	EOC: EOC: Other PT Losses	4.32	3.33	3.33	4.18	4.18	3.63	5.82
29	1	EOC: EOC: Other PT Losses	4.64	4.78	4.78	4.66	4.66	4.74	4.42
29	2	EOC: EOC: Other PT Losses	4.63	4.75	4.76	4.65	4.65	4.72	4.44
30	0	EOC: EOC: Other PT Losses	4.63	4.75	4.76	4.65	4.65	4.72	4.44
30	1	EOC: EOC: Other PT Losses	4.62	4.67	4.67	4.63	4.62	4.66	4.54
30	2	EOC: EOC: Other PT Losses	4.63	4.61	4.61	4.62	4.62	4.61	4.65
31	0	EOC: EOC: Other PT Losses	4.63	4.61	4.61	4.62	4.62	4.61	4.65
31	1	EOC: EOC: Other PT Losses	4.63	4.54	4.54	4.62	4.62	4.57	4.77
31	2	EOC: EOC: Other PT Losses	4.63	4.47	4.47	4.61	4.61	4.52	4.88
32	0	EOC: EOC: Other PT Losses	4.63	4.47	4.47	4.61	4.61	4.52	4.88
32	1	EOC: EOC: Other PT Losses	4.63	4.45	4.46	4.61	4.60	4.51	4.90
32	2	EOC: EOC: Other PT Losses	4.48	4.30	4.30	4.46	4.46	4.35	4.76
33	0	EOC: EOC: Other PT Losses	4.34	4.10	4.10	4.31	4.31	4.18	4.70
33	1	EOC: EOC: Other PT Losses	4.20	4.04	4.05	4.17	4.17	4.09	4.42
33	2	EOC: EOC: Other PT Losses	4.19	4.13	4.13	4.18	4.18	4.15	4.28
34	0	EOC: EOC: Other PT Losses	4.18	3.74	3.74	4.12	4.11	3.88	4.83
34	1	EOC: EOC: Other PT Losses	4.17	3.79	3.79	4.12	4.12	3.91	4.74
34	2	EOC: EOC: Other PT Losses	4.17	3.84	3.84	4.12	4.12	3.94	4.66

MEMBER STRESSES

DECK & CANOPY MEMBERS
EOC

(-) compression

			OTHER PT LOSSES (PS)						
Member	Station	Result Case	(P/A) @ Centroid (kips/ft²)	Normal Stress @ Point 1 (kips/ft²)	Normal Stress @ Point 2 (kips/ft²)	Normal Stress @ Point 3 (kips/ft²)	Normal Stress @ Point 4 (kips/ft²)	Normal Stress @ Point 5 (kips/ft²)	Normal Stress @ Point 6 (kips/ft²)
35	0	EOC: EOC: Other PT Losses	4.17	3.84	3.84	4.12	4.12	3.94	4.66
35	1	EOC: EOC: Other PT Losses	4.17	4.00	4.01	4.15	4.14	4.05	4.42
35	2	EOC: EOC: Other PT Losses	4.17	4.17	4.17	4.17	4.17	4.17	4.17
36	0	EOC: EOC: Other PT Losses	4.17	4.17	4.17	4.17	4.17	4.17	4.17
36	1	EOC: EOC: Other PT Losses	4.17	4.33	4.33	4.19	4.19	4.28	3.92
36	2	EOC: EOC: Other PT Losses	4.17	4.49	4.50	4.21	4.21	4.40	3.67
37	0	EOC: EOC: Other PT Losses	4.17	4.49	4.50	4.21	4.21	4.40	3.67
37	1	EOC: EOC: Other PT Losses	4.17	4.58	4.58	4.23	4.23	4.45	3.55
37	2	EOC: EOC: Other PT Losses	4.05	4.54	4.54	4.12	4.12	4.39	3.30
38	0	EOC: EOC: Other PT Losses	3.90	4.28	4.28	3.96	3.96	4.17	3.32
38	1	EOC: EOC: Other PT Losses	3.78	4.25	4.25	3.85	3.85	4.11	3.07
38	2	EOC: EOC: Other PT Losses	3.79	4.34	4.34	3.87	3.87	4.17	2.95
39	0	EOC: EOC: Other PT Losses	3.80	3.88	3.88	3.81	3.81	3.85	3.69
39	1	EOC: EOC: Other PT Losses	3.81	3.92	3.92	3.83	3.83	3.89	3.65
39	2	EOC: EOC: Other PT Losses	3.81	3.95	3.95	3.83	3.83	3.91	3.60
40	0	EOC: EOC: Other PT Losses	3.81	3.95	3.95	3.83	3.83	3.91	3.60
40	1	EOC: EOC: Other PT Losses	3.81	4.05	4.05	3.84	3.84	3.97	3.45
40	2	EOC: EOC: Other PT Losses	3.81	4.14	4.14	3.86	3.86	4.04	3.30
41	0	EOC: EOC: Other PT Losses	3.81	4.14	4.14	3.86	3.86	4.04	3.30
41	1	EOC: EOC: Other PT Losses	3.81	4.24	4.24	3.87	3.87	4.11	3.16
41	2	EOC: EOC: Other PT Losses	3.81	4.33	4.33	3.88	3.88	4.17	3.01
42	0	EOC: EOC: Other PT Losses	3.81	4.33	4.33	3.88	3.88	4.17	3.01
42	1	EOC: EOC: Other PT Losses	3.80	4.39	4.39	3.89	3.89	4.21	2.92
42	2	EOC: EOC: Other PT Losses	3.71	4.36	4.36	3.80	3.80	4.16	2.73
43	0	EOC: EOC: Other PT Losses	3.56	4.10	4.10	3.64	3.64	3.93	2.75
43	1	EOC: EOC: Other PT Losses	3.46	4.07	4.07	3.55	3.55	3.89	2.55
43	2	EOC: EOC: Other PT Losses	3.47	4.15	4.16	3.57	3.57	3.95	2.45
44	0	EOC: EOC: Other PT Losses	3.49	3.70	3.70	3.53	3.53	3.64	3.18
44	1	EOC: EOC: Other PT Losses	3.50	3.75	3.75	3.54	3.54	3.68	3.13
44	2	EOC: EOC: Other PT Losses	3.50	3.79	3.79	3.55	3.54	3.71	3.07
45	0	EOC: EOC: Other PT Losses	3.50	3.79	3.79	3.55	3.54	3.71	3.07
45	1	EOC: EOC: Other PT Losses	3.50	3.91	3.91	3.56	3.56	3.78	2.89
45	2	EOC: EOC: Other PT Losses	3.50	4.02	4.02	3.57	3.57	3.86	2.71
46	0	EOC: EOC: Other PT Losses	3.50	4.02	4.02	3.57	3.57	3.86	2.71
46	1	EOC: EOC: Other PT Losses	3.49	4.13	4.13	3.59	3.59	3.94	2.53
46	2	EOC: EOC: Other PT Losses	3.49	4.24	4.24	3.60	3.60	4.01	2.36
47	0	EOC: EOC: Other PT Losses	3.49	4.24	4.24	3.60	3.60	4.01	2.36
47	1	EOC: EOC: Other PT Losses	3.48	4.32	4.32	3.61	3.61	4.07	2.23
47	2	EOC: EOC: Other PT Losses	3.43	4.35	4.35	3.57	3.57	4.07	2.05
48	0	EOC: EOC: Other PT Losses	3.32	4.14	4.14	3.44	3.44	3.89	2.07
48	1	EOC: EOC: Other PT Losses	3.26	4.15	4.15	3.39	3.39	3.88	1.94
48	2	EOC: EOC: Other PT Losses	3.27	4.21	4.21	3.41	3.41	3.93	1.86
49	0	EOC: EOC: Other PT Losses	3.30	3.78	3.78	3.37	3.37	3.64	2.58
49	1	EOC: EOC: Other PT Losses	3.31	3.77	3.77	3.38	3.38	3.63	2.62
49	2	EOC: EOC: Other PT Losses	3.31	3.75	3.75	3.37	3.37	3.62	2.65
50	0	EOC: EOC: Other PT Losses	3.31	3.75	3.75	3.37	3.37	3.62	2.65
50	1	EOC: EOC: Other PT Losses	3.31	3.69	3.69	3.36	3.36	3.58	2.72
50	2	EOC: EOC: Other PT Losses	3.30	3.64	3.64	3.35	3.35	3.54	2.80

MEMBER STRESSES

DECK & CANOPY MEMBERS
EOC

(-) compression

			OTHER PT LOSSES (PS)						
Member	Station	Result Case	(P/A) @ Centroid (kips/ft²)	Normal Stress @ Point 1 (kips/ft²)	Normal Stress @ Point 2 (kips/ft²)	Normal Stress @ Point 3 (kips/ft²)	Normal Stress @ Point 4 (kips/ft²)	Normal Stress @ Point 5 (kips/ft²)	Normal Stress @ Point 6 (kips/ft²)
51	0	EOC: EOC: Other PT Losses	3.30	3.64	3.64	3.35	3.35	3.54	2.80
51	1	EOC: EOC: Other PT Losses	3.30	3.58	3.58	3.34	3.34	3.50	2.87
51	2	EOC: EOC: Other PT Losses	3.30	3.53	3.53	3.33	3.33	3.46	2.95
52	0	EOC: EOC: Other PT Losses	3.30	3.53	3.53	3.33	3.33	3.46	2.95
52	1	EOC: EOC: Other PT Losses	3.30	3.49	3.49	3.33	3.33	3.43	3.01
52	2	EOC: EOC: Other PT Losses	3.25	3.40	3.40	3.27	3.27	3.35	3.03
60	0	EOC: EOC: Other PT Losses	0.00	0.00	0.00	0.00	0.00	0.00	0.00
60	1	EOC: EOC: Other PT Losses	4.49	-0.16	-0.16	3.81	3.81	1.25	11.49
60	2	EOC: EOC: Other PT Losses	5.89	1.45	1.45	5.24	5.24	2.80	12.56
101	0	EOC: EOC: Other PT Losses	9.40	21.33	21.33	-3.69	-3.69	18.67	6.95
101	1	EOC: EOC: Other PT Losses	12.30	18.98	18.98	4.96	4.96	17.49	10.92
101	2	EOC: EOC: Other PT Losses	12.57	16.53	16.53	8.22	8.22	15.64	11.75
102	0	EOC: EOC: Other PT Losses	12.57	16.53	16.53	8.22	8.22	15.64	11.75
102	1	EOC: EOC: Other PT Losses	12.71	17.85	17.85	7.08	7.08	16.71	11.66
102	2	EOC: EOC: Other PT Losses	12.99	12.25	12.25	13.80	13.80	12.41	13.14
103	0	EOC: EOC: Other PT Losses	12.99	12.25	12.25	13.80	13.80	12.41	13.14
103	1	EOC: EOC: Other PT Losses	13.35	11.82	11.82	15.04	15.04	12.16	13.67
103	2	EOC: EOC: Other PT Losses	13.49	13.43	13.43	13.56	13.56	13.44	13.51
104	0	EOC: EOC: Other PT Losses	13.49	13.43	13.43	13.56	13.56	13.44	13.51
104	1	EOC: EOC: Other PT Losses	13.63	14.06	14.06	13.16	13.16	13.97	13.54
104	2	EOC: EOC: Other PT Losses	6.80	9.72	9.72	3.59	3.59	9.07	6.20
106	0	EOC: EOC: Other PT Losses	7.49	13.13	13.13	1.29	1.29	11.87	6.33
106	1	EOC: EOC: Other PT Losses	15.47	18.40	18.40	12.26	12.26	17.75	14.87
106	2	EOC: EOC: Other PT Losses	15.43	18.08	18.08	12.52	12.52	17.49	14.88
107	0	EOC: EOC: Other PT Losses	15.43	18.08	18.08	12.52	12.52	17.49	14.88
107	1	EOC: EOC: Other PT Losses	15.39	17.12	17.12	13.49	13.49	16.73	15.03
107	2	EOC: EOC: Other PT Losses	15.42	16.22	16.22	14.55	14.55	16.04	15.26
108	0	EOC: EOC: Other PT Losses	15.42	16.22	16.22	14.55	14.55	16.04	15.26
108	1	EOC: EOC: Other PT Losses	15.46	15.18	15.18	15.76	15.76	15.24	15.52
108	2	EOC: EOC: Other PT Losses	15.52	14.17	14.17	17.00	17.00	14.47	15.80
109	0	EOC: EOC: Other PT Losses	15.52	14.17	14.17	17.00	17.00	14.47	15.80
109	1	EOC: EOC: Other PT Losses	15.58	13.96	13.96	17.35	17.35	14.32	15.91
109	2	EOC: EOC: Other PT Losses	7.55	8.14	8.14	6.91	6.91	8.01	7.43
111	0	EOC: EOC: Other PT Losses	7.32	12.04	12.04	2.15	2.15	10.99	6.35
111	1	EOC: EOC: Other PT Losses	15.65	17.49	17.49	13.63	13.63	17.08	15.27
111	2	EOC: EOC: Other PT Losses	15.61	17.24	17.24	13.83	13.83	16.88	15.28
112	0	EOC: EOC: Other PT Losses	15.61	17.24	17.24	13.83	13.83	16.88	15.28
112	1	EOC: EOC: Other PT Losses	15.58	16.54	16.54	14.52	14.52	16.32	15.38
112	2	EOC: EOC: Other PT Losses	15.58	15.88	15.88	15.25	15.25	15.81	15.51
113	0	EOC: EOC: Other PT Losses	15.58	15.88	15.88	15.25	15.25	15.81	15.51
113	1	EOC: EOC: Other PT Losses	15.58	15.08	15.08	16.12	16.12	15.19	15.68
113	2	EOC: EOC: Other PT Losses	15.64	14.36	14.36	17.05	17.05	14.64	15.91
114	0	EOC: EOC: Other PT Losses	15.64	14.36	14.36	17.05	17.05	14.64	15.91
114	1	EOC: EOC: Other PT Losses	15.71	14.29	14.29	17.26	17.26	14.61	16.00
114	2	EOC: EOC: Other PT Losses	7.36	8.49	8.49	6.11	6.11	8.24	7.12
116	0	EOC: EOC: Other PT Losses	6.26	10.43	10.43	1.67	1.67	9.50	5.39
116	1	EOC: EOC: Other PT Losses	14.12	15.51	15.51	12.59	12.59	15.20	13.83
116	2	EOC: EOC: Other PT Losses	14.06	15.29	15.29	12.71	12.71	15.02	13.81

MEMBER STRESSES

DECK & CANOPY MEMBERS
EOC

(-) compression

			OTHER PT LOSSES (PS)						
Member	Station	Result Case	(P/A) @ Centroid (kips/ft²)	Normal Stress @ Point 1 (kips/ft²)	Normal Stress @ Point 2 (kips/ft²)	Normal Stress @ Point 3 (kips/ft²)	Normal Stress @ Point 4 (kips/ft²)	Normal Stress @ Point 5 (kips/ft²)	Normal Stress @ Point 6 (kips/ft²)
117	0	EOC: EOC: Other PT Losses	14.06	15.29	15.29	12.71	12.71	15.02	13.81
117	1	EOC: EOC: Other PT Losses	14.01	14.65	14.65	13.30	13.30	14.51	13.88
117	2	EOC: EOC: Other PT Losses	14.00	14.06	14.06	13.93	13.93	14.05	13.99
118	0	EOC: EOC: Other PT Losses	14.00	14.06	14.06	13.93	13.93	14.05	13.99
118	1	EOC: EOC: Other PT Losses	13.99	13.37	13.37	14.68	14.67	13.51	14.12
118	2	EOC: EOC: Other PT Losses	14.07	12.76	12.76	15.50	15.50	13.05	14.33
119	0	EOC: EOC: Other PT Losses	14.07	12.76	12.76	15.50	15.50	13.05	14.33
119	1	EOC: EOC: Other PT Losses	14.14	12.75	12.75	15.67	15.67	13.06	14.43
119	2	EOC: EOC: Other PT Losses	6.25	7.43	7.43	4.97	4.97	7.16	6.01
121	0	EOC: EOC: Other PT Losses	4.27	7.03	7.03	1.23	1.23	6.41	3.70
121	1	EOC: EOC: Other PT Losses	10.81	11.30	11.30	10.26	10.26	11.19	10.70
121	2	EOC: EOC: Other PT Losses	10.76	11.22	11.22	10.24	10.24	11.12	10.66
122	0	EOC: EOC: Other PT Losses	10.76	11.22	11.22	10.24	10.24	11.12	10.66
122	1	EOC: EOC: Other PT Losses	10.71	10.76	10.76	10.65	10.65	10.75	10.69
122	2	EOC: EOC: Other PT Losses	10.69	10.34	10.34	11.08	11.08	10.41	10.76
123	0	EOC: EOC: Other PT Losses	10.69	10.34	10.34	11.08	11.08	10.41	10.76
123	1	EOC: EOC: Other PT Losses	10.68	9.91	9.91	11.51	11.51	10.08	10.83
123	2	EOC: EOC: Other PT Losses	10.72	9.55	9.55	12.01	12.01	9.81	10.97
124	0	EOC: EOC: Other PT Losses	10.72	9.55	9.55	12.01	12.01	9.81	10.97
124	1	EOC: EOC: Other PT Losses	10.77	9.57	9.57	12.09	12.09	9.84	11.02
124	2	EOC: EOC: Other PT Losses	5.62	5.49	5.49	5.76	5.76	5.52	5.65
126	0	EOC: EOC: Other PT Losses	2.88	3.42	3.42	2.28	2.28	3.30	2.77
126	1	EOC: EOC: Other PT Losses	5.98	6.18	6.18	5.76	5.76	6.14	5.94
126	2	EOC: EOC: Other PT Losses	5.94	6.08	6.08	5.78	5.78	6.05	5.91
127	0	EOC: EOC: Other PT Losses	5.94	6.08	6.08	5.78	5.78	6.05	5.91
127	1	EOC: EOC: Other PT Losses	5.89	5.68	5.68	6.12	6.12	5.73	5.94
127	2	EOC: EOC: Other PT Losses	5.88	5.31	5.31	6.51	6.51	5.44	6.00
128	0	EOC: EOC: Other PT Losses	5.88	5.31	5.31	6.51	6.51	5.44	6.00
128	1	EOC: EOC: Other PT Losses	5.87	4.96	4.96	6.87	6.87	5.16	6.06
133	0	EOC: EOC: Other PT Losses	5.28	5.10	5.10	5.48	5.48	5.14	5.32
133	1	EOC: EOC: Other PT Losses	5.27	4.94	4.94	5.63	5.63	5.01	5.34
133	2	EOC: EOC: Other PT Losses	5.26	4.84	4.84	5.73	5.73	4.93	5.35
134	0	EOC: EOC: Other PT Losses	5.26	4.84	4.84	5.73	5.73	4.93	5.35
134	1	EOC: EOC: Other PT Losses	5.25	4.71	4.71	5.85	5.85	4.83	5.37
134	2	EOC: EOC: Other PT Losses	5.28	4.63	4.63	5.98	5.98	4.78	5.41
135	0	EOC: EOC: Other PT Losses	5.28	4.63	4.63	5.98	5.98	4.78	5.41
135	1	EOC: EOC: Other PT Losses	5.30	4.67	4.67	5.99	5.99	4.81	5.43
135	2	EOC: EOC: Other PT Losses	1.23	-1.80	-1.80	4.57	4.57	-1.12	1.86
137	0	EOC: EOC: Other PT Losses	4.33	-0.48	-0.48	9.62	9.62	0.60	5.32
137	1	EOC: EOC: Other PT Losses	10.22	9.08	9.08	11.47	11.47	9.33	10.45
137	2	EOC: EOC: Other PT Losses	10.17	9.20	9.20	11.23	11.23	9.42	10.37
138	0	EOC: EOC: Other PT Losses	10.17	9.20	9.20	11.23	11.23	9.42	10.37
138	1	EOC: EOC: Other PT Losses	10.12	9.63	9.63	10.67	10.67	9.74	10.23
138	2	EOC: EOC: Other PT Losses	10.12	10.13	10.13	10.11	10.11	10.13	10.12
139	0	EOC: EOC: Other PT Losses	10.12	10.13	10.13	10.11	10.11	10.13	10.12
139	1	EOC: EOC: Other PT Losses	10.12	10.76	10.76	9.41	9.41	10.61	9.98
139	2	EOC: EOC: Other PT Losses	10.15	11.46	11.46	8.72	8.72	11.17	9.89

MEMBER STRESSES

DECK & CANOPY MEMBERS
EOC

(-) compression

			OTHER PT LOSSES (PS)						
Member	Station	Result Case	(P/A) @ Centroid (kips/ft²)	Normal Stress @ Point 1 (kips/ft²)	Normal Stress @ Point 2 (kips/ft²)	Normal Stress @ Point 3 (kips/ft²)	Normal Stress @ Point 4 (kips/ft²)	Normal Stress @ Point 5 (kips/ft²)	Normal Stress @ Point 6 (kips/ft²)
140	0	EOC: EOC: Other PT Losses	10.15	11.46	11.46	8.72	8.72	11.17	9.89
140	1	EOC: EOC: Other PT Losses	10.19	11.60	11.60	8.65	8.65	11.29	9.90
140	2	EOC: EOC: Other PT Losses	4.34	2.37	2.37	6.51	6.51	2.81	4.75
142	0	EOC: EOC: Other PT Losses	5.14	0.00	0.00	10.77	10.77	1.15	6.19
142	1	EOC: EOC: Other PT Losses	11.34	10.17	10.17	12.63	12.63	10.43	11.58
142	2	EOC: EOC: Other PT Losses	11.30	10.43	10.43	12.26	12.26	10.62	11.48
143	0	EOC: EOC: Other PT Losses	11.30	10.43	10.43	12.26	12.26	10.62	11.48
143	1	EOC: EOC: Other PT Losses	11.26	10.93	10.93	11.62	11.62	11.00	11.33
143	2	EOC: EOC: Other PT Losses	11.26	11.49	11.49	11.00	11.00	11.44	11.21
144	0	EOC: EOC: Other PT Losses	11.26	11.49	11.49	11.00	11.00	11.44	11.21
144	1	EOC: EOC: Other PT Losses	11.25	12.23	12.23	10.18	10.18	12.01	11.05
144	2	EOC: EOC: Other PT Losses	11.29	13.03	13.03	9.38	9.38	12.64	10.93
145	0	EOC: EOC: Other PT Losses	11.29	13.03	13.03	9.38	9.38	12.64	10.93
145	1	EOC: EOC: Other PT Losses	11.33	13.17	13.17	9.30	9.30	12.76	10.95
145	2	EOC: EOC: Other PT Losses	5.14	3.45	3.45	7.00	7.00	3.82	5.49
147	0	EOC: EOC: Other PT Losses	5.75	0.33	0.33	11.71	11.71	1.54	6.87
147	1	EOC: EOC: Other PT Losses	12.13	10.85	10.86	13.53	13.53	11.14	12.39
147	2	EOC: EOC: Other PT Losses	12.09	11.24	11.24	13.02	13.02	11.43	12.26
148	0	EOC: EOC: Other PT Losses	12.09	11.24	11.24	13.02	13.02	11.43	12.26
148	1	EOC: EOC: Other PT Losses	12.05	11.88	11.88	12.23	12.23	11.92	12.08
148	2	EOC: EOC: Other PT Losses	12.04	12.59	12.59	11.44	11.44	12.47	11.93
149	0	EOC: EOC: Other PT Losses	12.04	12.59	12.59	11.44	11.44	12.47	11.93
149	1	EOC: EOC: Other PT Losses	12.04	13.49	13.49	10.44	10.44	13.17	11.74
149	2	EOC: EOC: Other PT Losses	12.07	14.46	14.46	9.46	9.46	13.92	11.58
150	0	EOC: EOC: Other PT Losses	12.07	14.46	14.46	9.46	9.46	13.92	11.58
150	1	EOC: EOC: Other PT Losses	12.11	14.66	14.66	9.31	9.31	14.09	11.58
150	2	EOC: EOC: Other PT Losses	5.75	4.75	4.75	6.84	6.84	4.97	5.95
152	0	EOC: EOC: Other PT Losses	6.14	1.47	1.47	11.26	11.26	2.51	7.10
152	1	EOC: EOC: Other PT Losses	12.50	11.77	11.77	13.31	13.30	11.93	12.65
152	2	EOC: EOC: Other PT Losses	12.46	12.00	12.00	12.96	12.96	12.10	12.55
153	0	EOC: EOC: Other PT Losses	12.46	12.00	12.00	12.96	12.96	12.10	12.55
153	1	EOC: EOC: Other PT Losses	12.41	12.31	12.31	12.53	12.53	12.33	12.44
153	2	EOC: EOC: Other PT Losses	12.41	12.69	12.69	12.10	12.10	12.62	12.35
154	0	EOC: EOC: Other PT Losses	12.41	12.69	12.69	12.10	12.10	12.62	12.35
154	1	EOC: EOC: Other PT Losses	12.40	13.24	13.24	11.48	11.48	13.05	12.23
154	2	EOC: EOC: Other PT Losses	12.44	13.87	13.87	10.87	10.87	13.55	12.15
155	0	EOC: EOC: Other PT Losses	12.44	13.87	13.87	10.87	10.87	13.55	12.15
155	1	EOC: EOC: Other PT Losses	12.47	13.97	13.97	10.84	10.84	13.64	12.17
155	2	EOC: EOC: Other PT Losses	6.13	4.04	4.04	8.42	8.42	4.51	6.56
157	0	EOC: EOC: Other PT Losses	6.29	-0.14	-0.14	13.34	13.34	1.30	7.61
157	1	EOC: EOC: Other PT Losses	12.38	9.59	9.59	15.44	15.44	10.21	12.95
157	2	EOC: EOC: Other PT Losses	12.19	10.09	10.09	14.49	14.49	10.56	12.62
158	0	EOC: EOC: Other PT Losses	12.19	10.09	10.09	14.49	14.49	10.56	12.62
158	1	EOC: EOC: Other PT Losses	12.05	13.31	13.31	10.66	10.66	13.03	11.79
158	2	EOC: EOC: Other PT Losses	11.95	16.54	16.54	6.91	6.91	15.52	11.00
159	0	EOC: EOC: Other PT Losses	11.95	16.54	16.54	6.91	6.91	15.52	11.00
159	1	EOC: EOC: Other PT Losses	11.93	17.50	17.50	5.81	5.81	16.26	10.78
159	2	EOC: EOC: Other PT Losses	11.75	17.10	17.10	5.88	5.88	15.91	10.65

MEMBER STRESSES

DECK & CANOPY MEMBERS
EOC

(-) compression

			UTILITIES (DW)						
Member	Station	Result Case	(P/A) @ Centroid (kips/ft²)	Normal Stress @ Point 1 (kips/ft²)	Normal Stress @ Point 2 (kips/ft²)	Normal Stress @ Point 3 (kips/ft²)	Normal Stress @ Point 4 (kips/ft²)	Normal Stress @ Point 5 (kips/ft²)	Normal Stress @ Point 6 (kips/ft²)
1	0	EOC: EOC: Other PT Losses	0.00	0.00	0.00	0.00	0.00	0.00	0.00
1	1	EOC: EOC: Other PT Losses	0.00	0.00	0.00	0.00	0.00	0.00	0.00
1	2	EOC: EOC: Other PT Losses	0.00	0.00	0.00	0.00	0.00	0.00	0.00
2	0	EOC: EOC: Other PT Losses	-0.03	0.20	0.20	0.01	0.01	0.13	-0.37
2	1	EOC: EOC: Other PT Losses	-0.03	-1.19	-1.19	-0.20	-0.20	-0.83	1.72
2	2	EOC: EOC: Other PT Losses	-0.03	-2.57	-2.57	-0.40	-0.40	-1.79	3.79
3	0	EOC: EOC: Other PT Losses	1.62	0.72	0.72	1.49	1.49	0.99	2.99
3	1	EOC: EOC: Other PT Losses	1.62	-0.93	-0.94	1.25	1.25	-0.16	5.47
3	2	EOC: EOC: Other PT Losses	1.62	-2.18	-2.18	1.07	1.07	-1.02	7.34
4	0	EOC: EOC: Other PT Losses	1.62	-2.18	-2.18	1.07	1.07	-1.02	7.34
4	1	EOC: EOC: Other PT Losses	1.62	-3.48	-3.49	0.88	0.88	-1.93	9.31
4	2	EOC: EOC: Other PT Losses	1.63	-2.93	-2.93	0.96	0.96	-1.55	8.48
5	0	EOC: EOC: Other PT Losses	1.63	-2.93	-2.93	0.96	0.96	-1.55	8.48
5	1	EOC: EOC: Other PT Losses	1.63	-0.52	-0.53	1.31	1.31	0.13	4.86
5	2	EOC: EOC: Other PT Losses	1.63	3.74	3.74	1.93	1.94	3.10	-1.55
6	0	EOC: EOC: Other PT Losses	1.63	3.74	3.74	1.93	1.94	3.10	-1.55
6	1	EOC: EOC: Other PT Losses	1.63	4.45	4.45	2.04	2.04	3.59	-2.62
6	2	EOC: EOC: Other PT Losses	1.63	5.20	5.19	2.15	2.15	4.11	-3.73
7	0	EOC: EOC: Other PT Losses	1.41	5.51	5.51	2.01	2.01	4.26	-4.76
7	1	EOC: EOC: Other PT Losses	1.41	5.02	5.02	1.93	1.94	3.92	-4.02
7	2	EOC: EOC: Other PT Losses	1.41	4.54	4.53	1.86	1.87	3.59	-3.29
8	0	EOC: EOC: Other PT Losses	1.74	5.04	5.04	2.22	2.22	4.04	-3.23
8	1	EOC: EOC: Other PT Losses	1.74	3.09	3.08	1.93	1.94	2.68	-0.29
8	2	EOC: EOC: Other PT Losses	1.74	1.47	1.46	1.69	1.70	1.55	2.15
9	0	EOC: EOC: Other PT Losses	1.74	1.47	1.46	1.69	1.70	1.55	2.15
9	1	EOC: EOC: Other PT Losses	1.74	-1.13	-1.14	1.31	1.32	-0.26	6.05
9	2	EOC: EOC: Other PT Losses	1.74	-1.63	-1.64	1.24	1.25	-0.61	6.81
10	0	EOC: EOC: Other PT Losses	1.74	-1.63	-1.64	1.24	1.25	-0.61	6.81
10	1	EOC: EOC: Other PT Losses	1.74	-0.03	-0.04	1.48	1.48	0.50	4.41
10	2	EOC: EOC: Other PT Losses	1.74	3.67	3.66	2.02	2.03	3.08	-1.15
11	0	EOC: EOC: Other PT Losses	1.74	3.67	3.66	2.02	2.03	3.08	-1.15
11	1	EOC: EOC: Other PT Losses	1.74	4.32	4.32	2.11	2.12	3.54	-2.14
11	2	EOC: EOC: Other PT Losses	1.74	5.02	5.01	2.22	2.22	4.02	-3.18
12	0	EOC: EOC: Other PT Losses	1.73	4.98	4.97	2.20	2.21	3.99	-3.14
12	1	EOC: EOC: Other PT Losses	1.73	4.93	4.92	2.19	2.20	3.95	-3.06
12	2	EOC: EOC: Other PT Losses	1.73	4.89	4.88	2.19	2.20	3.92	-3.00
13	0	EOC: EOC: Other PT Losses	1.36	4.67	4.66	1.84	1.85	3.66	-3.62
13	1	EOC: EOC: Other PT Losses	1.36	2.96	2.95	1.59	1.60	2.47	-1.04
13	2	EOC: EOC: Other PT Losses	1.36	1.49	1.48	1.37	1.38	1.45	1.16
14	0	EOC: EOC: Other PT Losses	1.36	1.49	1.48	1.37	1.38	1.45	1.16
14	1	EOC: EOC: Other PT Losses	1.36	-1.47	-1.48	0.94	0.95	-0.61	5.62
14	2	EOC: EOC: Other PT Losses	1.36	-1.92	-1.93	0.87	0.89	-0.92	6.30
15	0	EOC: EOC: Other PT Losses	1.36	-1.92	-1.93	0.87	0.89	-0.92	6.30
15	1	EOC: EOC: Other PT Losses	1.36	0.15	0.13	1.18	1.19	0.51	3.20
15	2	EOC: EOC: Other PT Losses	1.36	4.72	4.70	1.84	1.86	3.69	-3.67
16	0	EOC: EOC: Other PT Losses	1.36	4.72	4.70	1.84	1.86	3.69	-3.67
16	1	EOC: EOC: Other PT Losses	1.36	5.41	5.40	1.95	1.96	4.18	-4.71
16	2	EOC: EOC: Other PT Losses	1.36	6.14	6.13	2.05	2.07	4.68	-5.81

MEMBER STRESSES

DECK & CANOPY MEMBERS
EOC

(-) compression

			UTILITIES (DW)						
Member	Station	Result Case	(P/A) @ Centroid (kips/ft²)	Normal Stress @ Point 1 (kips/ft²)	Normal Stress @ Point 2 (kips/ft²)	Normal Stress @ Point 3 (kips/ft²)	Normal Stress @ Point 4 (kips/ft²)	Normal Stress @ Point 5 (kips/ft²)	Normal Stress @ Point 6 (kips/ft²)
17	0	EOC: EOC: Other PT Losses	1.33	5.53	5.52	1.94	1.95	4.25	-4.98
17	1	EOC: EOC: Other PT Losses	1.33	5.89	5.88	1.99	2.00	4.50	-5.52
17	2	EOC: EOC: Other PT Losses	1.33	6.26	6.25	2.04	2.06	4.76	-6.07
18	0	EOC: EOC: Other PT Losses	0.52	5.54	5.52	1.24	1.26	4.01	-7.02
18	1	EOC: EOC: Other PT Losses	0.52	3.95	3.93	1.01	1.03	2.90	-4.62
18	2	EOC: EOC: Other PT Losses	0.52	2.52	2.50	0.80	0.82	1.90	-2.48
19	0	EOC: EOC: Other PT Losses	0.52	2.52	2.50	0.80	0.82	1.90	-2.48
19	1	EOC: EOC: Other PT Losses	0.52	-1.75	-1.77	0.18	0.19	-1.07	3.95
19	2	EOC: EOC: Other PT Losses	0.52	-3.06	-3.08	-0.01	0.00	-1.98	5.92
20	0	EOC: EOC: Other PT Losses	0.52	-3.06	-3.08	-0.01	0.00	-1.98	5.92
20	1	EOC: EOC: Other PT Losses	0.52	-1.42	-1.43	0.23	0.25	-0.83	3.45
20	2	EOC: EOC: Other PT Losses	0.52	3.19	3.17	0.90	0.92	2.37	-3.48
21	0	EOC: EOC: Other PT Losses	0.52	3.19	3.17	0.90	0.92	2.37	-3.48
21	1	EOC: EOC: Other PT Losses	0.52	4.31	4.29	1.07	1.09	3.15	-5.16
21	2	EOC: EOC: Other PT Losses	0.52	5.52	5.50	1.24	1.26	4.00	-6.98
22	0	EOC: EOC: Other PT Losses	0.19	4.66	4.64	0.83	0.85	3.30	-6.53
22	1	EOC: EOC: Other PT Losses	0.19	5.39	5.37	0.94	0.96	3.80	-7.63
22	2	EOC: EOC: Other PT Losses	0.19	6.13	6.11	1.04	1.06	4.32	-8.73
23	0	EOC: EOC: Other PT Losses	-0.57	5.17	5.15	0.25	0.27	3.41	-9.19
23	1	EOC: EOC: Other PT Losses	-0.57	4.04	4.02	0.09	0.11	2.63	-7.49
23	2	EOC: EOC: Other PT Losses	-0.57	2.99	2.97	-0.06	-0.04	1.90	-5.91
24	0	EOC: EOC: Other PT Losses	-0.57	2.99	2.97	-0.06	-0.04	1.90	-5.91
24	1	EOC: EOC: Other PT Losses	-0.57	-2.09	-2.11	-0.81	-0.78	-1.64	1.73
24	2	EOC: EOC: Other PT Losses	-0.57	-3.79	-3.81	-1.05	-1.03	-2.82	4.28
25	0	EOC: EOC: Other PT Losses	-0.57	-3.79	-3.81	-1.05	-1.03	-2.82	4.28
25	1	EOC: EOC: Other PT Losses	-0.57	-2.09	-2.11	-0.80	-0.78	-1.63	1.73
25	2	EOC: EOC: Other PT Losses	-0.57	3.01	2.98	-0.06	-0.03	1.91	-5.92
26	0	EOC: EOC: Other PT Losses	-0.57	3.01	2.98	-0.06	-0.03	1.91	-5.92
26	1	EOC: EOC: Other PT Losses	-0.57	4.86	4.84	0.21	0.24	3.20	-8.71
26	2	EOC: EOC: Other PT Losses	-0.57	6.94	6.91	0.52	0.54	4.65	-11.83
29	0	EOC: EOC: Other PT Losses	-1.31	4.87	4.87	-0.41	-0.41	2.99	-10.61
29	1	EOC: EOC: Other PT Losses	-1.31	2.83	2.83	-0.71	-0.71	1.57	-7.54
29	2	EOC: EOC: Other PT Losses	-1.31	1.01	1.01	-0.97	-0.97	0.30	-4.80
30	0	EOC: EOC: Other PT Losses	-1.31	1.01	1.01	-0.97	-0.97	0.30	-4.80
30	1	EOC: EOC: Other PT Losses	-1.31	-3.90	-3.90	-1.69	-1.69	-3.11	2.57
30	2	EOC: EOC: Other PT Losses	-1.31	-5.41	-5.41	-1.91	-1.91	-4.16	4.85
31	0	EOC: EOC: Other PT Losses	-1.31	-5.41	-5.41	-1.91	-1.91	-4.16	4.85
31	1	EOC: EOC: Other PT Losses	-1.31	-3.52	-3.52	-1.63	-1.63	-2.85	2.02
31	2	EOC: EOC: Other PT Losses	-1.31	1.76	1.76	-0.86	-0.86	0.83	-5.91
32	0	EOC: EOC: Other PT Losses	-1.31	1.76	1.76	-0.86	-0.86	0.83	-5.91
32	1	EOC: EOC: Other PT Losses	-1.31	2.82	2.82	-0.70	-0.70	1.56	-7.51
32	2	EOC: EOC: Other PT Losses	-1.31	3.95	3.95	-0.54	-0.54	2.35	-9.21
33	0	EOC: EOC: Other PT Losses	-1.01	3.95	3.95	-0.28	-0.28	2.44	-8.46
33	1	EOC: EOC: Other PT Losses	-1.01	3.90	3.90	-0.29	-0.29	2.41	-8.39
33	2	EOC: EOC: Other PT Losses	-1.01	3.86	3.86	-0.30	-0.30	2.38	-8.33
34	0	EOC: EOC: Other PT Losses	-1.01	3.70	3.70	-0.32	-0.32	2.27	-8.08
34	1	EOC: EOC: Other PT Losses	-1.01	3.15	3.15	-0.40	-0.40	1.89	-7.26
34	2	EOC: EOC: Other PT Losses	-1.01	2.64	2.65	-0.47	-0.47	1.53	-6.50

MEMBER STRESSES

DECK & CANOPY MEMBERS
EOC

(-) compression

			UTILITIES (DW)						
Member	Station	Result Case	(P/A) @ Centroid (kips/ft²)	Normal Stress @ Point 1 (kips/ft²)	Normal Stress @ Point 2 (kips/ft²)	Normal Stress @ Point 3 (kips/ft²)	Normal Stress @ Point 4 (kips/ft²)	Normal Stress @ Point 5 (kips/ft²)	Normal Stress @ Point 6 (kips/ft²)
35	0	EOC: EOC: Other PT Losses	-1.01	2.64	2.65	-0.47	-0.47	1.53	-6.50
35	1	EOC: EOC: Other PT Losses	-1.01	1.31	1.31	-0.67	-0.67	0.61	-4.50
35	2	EOC: EOC: Other PT Losses	-1.01	0.34	0.34	-0.81	-0.81	-0.07	-3.04
36	0	EOC: EOC: Other PT Losses	-1.01	0.34	0.34	-0.81	-0.81	-0.07	-3.04
36	1	EOC: EOC: Other PT Losses	-1.01	-0.27	-0.27	-0.90	-0.90	-0.49	-2.11
36	2	EOC: EOC: Other PT Losses	-1.01	-0.52	-0.52	-0.94	-0.94	-0.67	-1.73
37	0	EOC: EOC: Other PT Losses	-1.01	-0.52	-0.52	-0.94	-0.94	-0.67	-1.73
37	1	EOC: EOC: Other PT Losses	-1.01	-0.51	-0.51	-0.93	-0.93	-0.66	-1.75
37	2	EOC: EOC: Other PT Losses	-1.01	-0.41	-0.41	-0.92	-0.92	-0.59	-1.91
38	0	EOC: EOC: Other PT Losses	-0.82	-0.02	-0.02	-0.70	-0.70	-0.26	-2.02
38	1	EOC: EOC: Other PT Losses	-0.82	-0.10	-0.10	-0.71	-0.71	-0.31	-1.90
38	2	EOC: EOC: Other PT Losses	-0.82	-0.17	-0.17	-0.72	-0.72	-0.37	-1.78
39	0	EOC: EOC: Other PT Losses	-0.81	0.20	0.20	-0.66	-0.66	-0.11	-2.33
39	1	EOC: EOC: Other PT Losses	-0.81	-0.10	-0.10	-0.71	-0.71	-0.31	-1.89
39	2	EOC: EOC: Other PT Losses	-0.81	-0.36	-0.36	-0.74	-0.74	-0.49	-1.49
40	0	EOC: EOC: Other PT Losses	-0.81	-0.36	-0.36	-0.74	-0.74	-0.49	-1.49
40	1	EOC: EOC: Other PT Losses	-0.81	-0.94	-0.93	-0.83	-0.83	-0.90	-0.62
40	2	EOC: EOC: Other PT Losses	-0.81	-1.22	-1.22	-0.87	-0.87	-1.09	-0.20
41	0	EOC: EOC: Other PT Losses	-0.81	-1.22	-1.22	-0.87	-0.87	-1.09	-0.20
41	1	EOC: EOC: Other PT Losses	-0.81	-1.20	-1.20	-0.87	-0.87	-1.08	-0.22
41	2	EOC: EOC: Other PT Losses	-0.81	-0.89	-0.89	-0.82	-0.82	-0.86	-0.69
42	0	EOC: EOC: Other PT Losses	-0.81	-0.89	-0.89	-0.82	-0.82	-0.86	-0.69
42	1	EOC: EOC: Other PT Losses	-0.81	-0.54	-0.54	-0.77	-0.77	-0.62	-1.21
42	2	EOC: EOC: Other PT Losses	-0.81	-0.08	-0.08	-0.70	-0.70	-0.30	-1.90
43	0	EOC: EOC: Other PT Losses	-0.53	0.32	0.32	-0.41	-0.41	0.06	-1.81
43	1	EOC: EOC: Other PT Losses	-0.53	0.24	0.24	-0.42	-0.42	0.01	-1.69
43	2	EOC: EOC: Other PT Losses	-0.53	0.17	0.17	-0.43	-0.43	-0.05	-1.58
44	0	EOC: EOC: Other PT Losses	-0.52	0.55	0.55	-0.37	-0.37	0.22	-2.14
44	1	EOC: EOC: Other PT Losses	-0.52	0.23	0.23	-0.41	-0.41	0.00	-1.66
44	2	EOC: EOC: Other PT Losses	-0.52	-0.05	-0.05	-0.45	-0.45	-0.20	-1.23
45	0	EOC: EOC: Other PT Losses	-0.52	-0.05	-0.05	-0.45	-0.45	-0.20	-1.23
45	1	EOC: EOC: Other PT Losses	-0.52	-0.68	-0.68	-0.55	-0.55	-0.63	-0.29
45	2	EOC: EOC: Other PT Losses	-0.52	-1.05	-1.05	-0.60	-0.60	-0.89	0.27
46	0	EOC: EOC: Other PT Losses	-0.52	-1.05	-1.05	-0.60	-0.60	-0.89	0.27
46	1	EOC: EOC: Other PT Losses	-0.52	-1.16	-1.16	-0.61	-0.61	-0.96	0.43
46	2	EOC: EOC: Other PT Losses	-0.52	-1.01	-1.01	-0.59	-0.59	-0.86	0.21
47	0	EOC: EOC: Other PT Losses	-0.52	-1.01	-1.01	-0.59	-0.59	-0.86	0.21
47	1	EOC: EOC: Other PT Losses	-0.52	-0.75	-0.75	-0.55	-0.55	-0.68	-0.18
47	2	EOC: EOC: Other PT Losses	-0.52	-0.36	-0.36	-0.50	-0.50	-0.41	-0.77
48	0	EOC: EOC: Other PT Losses	-0.29	-0.02	-0.02	-0.25	-0.25	-0.10	-0.69
48	1	EOC: EOC: Other PT Losses	-0.29	-0.07	-0.07	-0.25	-0.25	-0.14	-0.61
48	2	EOC: EOC: Other PT Losses	-0.29	-0.13	-0.13	-0.26	-0.26	-0.17	-0.53
49	0	EOC: EOC: Other PT Losses	-0.31	0.14	0.14	-0.24	-0.24	0.01	-0.99
49	1	EOC: EOC: Other PT Losses	-0.31	0.11	0.11	-0.25	-0.25	-0.02	-0.94
49	2	EOC: EOC: Other PT Losses	-0.31	0.10	0.10	-0.25	-0.25	-0.02	-0.93
50	0	EOC: EOC: Other PT Losses	-0.31	0.10	0.10	-0.25	-0.25	-0.02	-0.93
50	1	EOC: EOC: Other PT Losses	-0.31	0.25	0.25	-0.23	-0.23	0.08	-1.16
50	2	EOC: EOC: Other PT Losses	-0.31	0.63	0.63	-0.17	-0.17	0.35	-1.72

MEMBER STRESSES

DECK & CANOPY MEMBERS
EOC

(-) compression

			UTILITIES (DW)						
Member	Station	Result Case	(P/A) @ Centroid (kips/ft²)	Normal Stress @ Point 1 (kips/ft²)	Normal Stress @ Point 2 (kips/ft²)	Normal Stress @ Point 3 (kips/ft²)	Normal Stress @ Point 4 (kips/ft²)	Normal Stress @ Point 5 (kips/ft²)	Normal Stress @ Point 6 (kips/ft²)
51	0	EOC: EOC: Other PT Losses	-0.31	0.63	0.63	-0.17	-0.17	0.35	-1.72
51	1	EOC: EOC: Other PT Losses	-0.31	1.24	1.24	-0.08	-0.08	0.77	-2.63
51	2	EOC: EOC: Other PT Losses	-0.31	2.07	2.07	0.04	0.04	1.35	-3.89
52	0	EOC: EOC: Other PT Losses	-0.31	2.07	2.07	0.04	0.04	1.35	-3.89
52	1	EOC: EOC: Other PT Losses	-0.31	2.90	2.90	0.16	0.16	1.92	-5.13
52	2	EOC: EOC: Other PT Losses	-0.31	3.87	3.87	0.30	0.30	2.60	-6.58
60	0	EOC: EOC: Other PT Losses	0.00	0.00	0.00	0.00	0.00	0.00	0.00
60	1	EOC: EOC: Other PT Losses	0.00	0.00	0.00	0.00	0.00	0.00	0.00
60	2	EOC: EOC: Other PT Losses	0.00	0.00	0.00	0.00	0.00	0.00	0.00
101	0	EOC: EOC: Other PT Losses	0.00	0.00	0.00	0.00	0.00	0.00	0.00
101	1	EOC: EOC: Other PT Losses	0.00	0.00	0.00	0.00	0.00	0.00	0.00
101	2	EOC: EOC: Other PT Losses	0.00	0.00	0.00	0.00	0.00	0.00	0.00
102	0	EOC: EOC: Other PT Losses	0.00	0.00	0.00	0.00	0.00	0.00	0.00
102	1	EOC: EOC: Other PT Losses	0.00	0.00	0.00	0.00	0.00	0.00	0.00
102	2	EOC: EOC: Other PT Losses	0.00	0.00	0.00	0.00	0.00	0.00	0.00
103	0	EOC: EOC: Other PT Losses	0.00	0.00	0.00	0.00	0.00	0.00	0.00
103	1	EOC: EOC: Other PT Losses	0.00	0.00	0.00	0.00	0.00	0.00	0.00
103	2	EOC: EOC: Other PT Losses	0.00	0.00	0.00	0.00	0.00	0.00	0.00
104	0	EOC: EOC: Other PT Losses	0.00	0.00	0.00	0.00	0.00	0.00	0.00
104	1	EOC: EOC: Other PT Losses	0.00	0.00	0.00	0.00	0.00	0.00	0.00
104	2	EOC: EOC: Other PT Losses	0.00	0.00	0.00	0.00	0.00	0.00	0.00
106	0	EOC: EOC: Other PT Losses	-4.05	0.98	0.98	-9.58	-9.58	-0.14	-5.09
106	1	EOC: EOC: Other PT Losses	-4.05	0.64	0.64	-9.20	-9.20	-0.41	-5.02
106	2	EOC: EOC: Other PT Losses	-4.05	0.29	0.29	-8.83	-8.83	-0.68	-4.95
107	0	EOC: EOC: Other PT Losses	-4.05	0.29	0.29	-8.83	-8.83	-0.68	-4.95
107	1	EOC: EOC: Other PT Losses	-4.05	-1.77	-1.77	-6.56	-6.56	-2.28	-4.52
107	2	EOC: EOC: Other PT Losses	-4.05	-3.84	-3.84	-4.29	-4.29	-3.89	-4.10
108	0	EOC: EOC: Other PT Losses	-4.05	-3.84	-3.84	-4.29	-4.29	-3.89	-4.10
108	1	EOC: EOC: Other PT Losses	-4.05	-5.79	-5.79	-2.14	-2.14	-5.41	-3.70
108	2	EOC: EOC: Other PT Losses	-4.05	-7.75	-7.75	0.00	0.00	-6.92	-3.29
109	0	EOC: EOC: Other PT Losses	-4.05	-7.75	-7.75	0.00	0.00	-6.92	-3.29
109	1	EOC: EOC: Other PT Losses	-4.05	-8.46	-8.46	0.78	0.79	-7.48	-3.15
109	2	EOC: EOC: Other PT Losses	-4.05	-9.17	-9.18	1.57	1.57	-8.03	-3.00
111	0	EOC: EOC: Other PT Losses	-5.55	-8.15	-8.15	-2.69	-2.69	-7.57	-5.01
111	1	EOC: EOC: Other PT Losses	-5.55	-8.02	-8.02	-2.83	-2.83	-7.47	-5.04
111	2	EOC: EOC: Other PT Losses	-5.55	-7.89	-7.89	-2.97	-2.97	-7.37	-5.06
112	0	EOC: EOC: Other PT Losses	-5.55	-7.89	-7.89	-2.97	-2.97	-7.37	-5.06
112	1	EOC: EOC: Other PT Losses	-5.55	-7.32	-7.32	-3.61	-3.61	-6.92	-5.18
112	2	EOC: EOC: Other PT Losses	-5.55	-6.74	-6.74	-4.24	-4.24	-6.47	-5.30
113	0	EOC: EOC: Other PT Losses	-5.55	-6.74	-6.74	-4.24	-4.24	-6.47	-5.30
113	1	EOC: EOC: Other PT Losses	-5.55	-6.12	-6.12	-4.92	-4.92	-5.99	-5.43
113	2	EOC: EOC: Other PT Losses	-5.55	-5.51	-5.51	-5.59	-5.59	-5.52	-5.56
114	0	EOC: EOC: Other PT Losses	-5.55	-5.51	-5.51	-5.59	-5.59	-5.52	-5.56
114	1	EOC: EOC: Other PT Losses	-5.55	-5.36	-5.36	-5.75	-5.75	-5.40	-5.59
114	2	EOC: EOC: Other PT Losses	-5.55	-5.22	-5.22	-5.91	-5.91	-5.29	-5.62
116	0	EOC: EOC: Other PT Losses	-5.29	-7.59	-7.60	-2.75	-2.75	-7.08	-4.81
116	1	EOC: EOC: Other PT Losses	-5.29	-7.45	-7.45	-2.91	-2.91	-6.97	-4.84
116	2	EOC: EOC: Other PT Losses	-5.29	-7.31	-7.31	-3.06	-3.06	-6.86	-4.87

MEMBER STRESSES

DECK & CANOPY MEMBERS
EOC

(-) compression

			UTILITIES (DW)						
Member	Station	Result Case	(P/A) @ Centroid (kips/ft²)	Normal Stress @ Point 1 (kips/ft²)	Normal Stress @ Point 2 (kips/ft²)	Normal Stress @ Point 3 (kips/ft²)	Normal Stress @ Point 4 (kips/ft²)	Normal Stress @ Point 5 (kips/ft²)	Normal Stress @ Point 6 (kips/ft²)
117	0	EOC: EOC: Other PT Losses	-5.29	-7.31	-7.31	-3.06	-3.06	-6.86	-4.87
117	1	EOC: EOC: Other PT Losses	-5.29	-6.48	-6.49	-3.97	-3.97	-6.22	-5.04
117	2	EOC: EOC: Other PT Losses	-5.29	-5.66	-5.66	-4.88	-4.87	-5.58	-5.21
118	0	EOC: EOC: Other PT Losses	-5.29	-5.66	-5.66	-4.88	-4.87	-5.58	-5.21
118	1	EOC: EOC: Other PT Losses	-5.29	-4.81	-4.81	-5.81	-5.81	-4.92	-5.38
118	2	EOC: EOC: Other PT Losses	-5.29	-3.96	-3.96	-6.74	-6.74	-4.25	-5.56
119	0	EOC: EOC: Other PT Losses	-5.29	-3.96	-3.96	-6.74	-6.74	-4.25	-5.56
119	1	EOC: EOC: Other PT Losses	-5.29	-3.80	-3.80	-6.92	-6.91	-4.13	-5.59
119	2	EOC: EOC: Other PT Losses	-5.29	-3.64	-3.65	-7.09	-7.09	-4.01	-5.62
121	0	EOC: EOC: Other PT Losses	-3.06	-5.09	-5.10	-0.83	-0.82	-4.64	-2.64
121	1	EOC: EOC: Other PT Losses	-3.06	-4.98	-4.98	-0.95	-0.95	-4.55	-2.66
121	2	EOC: EOC: Other PT Losses	-3.06	-4.87	-4.87	-1.07	-1.07	-4.47	-2.69
122	0	EOC: EOC: Other PT Losses	-3.06	-4.87	-4.87	-1.07	-1.07	-4.47	-2.69
122	1	EOC: EOC: Other PT Losses	-3.06	-4.03	-4.03	-1.99	-1.99	-3.82	-2.86
122	2	EOC: EOC: Other PT Losses	-3.06	-3.19	-3.19	-2.91	-2.91	-3.16	-3.03
123	0	EOC: EOC: Other PT Losses	-3.06	-3.19	-3.19	-2.91	-2.91	-3.16	-3.03
123	1	EOC: EOC: Other PT Losses	-3.06	-2.35	-2.35	-3.84	-3.83	-2.51	-3.20
123	2	EOC: EOC: Other PT Losses	-3.06	-1.51	-1.51	-4.76	-4.76	-1.86	-3.38
124	0	EOC: EOC: Other PT Losses	-3.06	-1.51	-1.51	-4.76	-4.76	-1.86	-3.38
124	1	EOC: EOC: Other PT Losses	-3.06	-1.41	-1.42	-4.86	-4.86	-1.78	-3.40
124	2	EOC: EOC: Other PT Losses	-3.06	-1.32	-1.32	-4.97	-4.97	-1.71	-3.42
126	0	EOC: EOC: Other PT Losses	0.75	-2.88	-2.88	4.74	4.74	-2.07	1.50
126	1	EOC: EOC: Other PT Losses	0.75	-2.47	-2.47	4.29	4.29	-1.75	1.41
126	2	EOC: EOC: Other PT Losses	0.75	-2.06	-2.06	3.84	3.84	-1.43	1.33
127	0	EOC: EOC: Other PT Losses	0.75	-2.06	-2.06	3.84	3.84	-1.43	1.33
127	1	EOC: EOC: Other PT Losses	0.75	-0.54	-0.54	2.17	2.17	-0.25	1.02
127	2	EOC: EOC: Other PT Losses	0.75	0.98	0.97	0.51	0.51	0.93	0.71
128	0	EOC: EOC: Other PT Losses	0.75	0.98	0.97	0.51	0.51	0.93	0.71
128	1	EOC: EOC: Other PT Losses	0.75	2.51	2.51	-1.18	-1.18	2.12	0.39
133	0	EOC: EOC: Other PT Losses	1.06	2.35	2.35	-0.35	-0.35	2.06	0.80
133	1	EOC: EOC: Other PT Losses	1.06	2.03	2.03	0.00	0.00	1.81	0.86
133	2	EOC: EOC: Other PT Losses	1.06	1.71	1.71	0.35	0.35	1.57	0.93
134	0	EOC: EOC: Other PT Losses	1.06	1.71	1.71	0.35	0.35	1.57	0.93
134	1	EOC: EOC: Other PT Losses	1.06	1.39	1.39	0.70	0.70	1.32	0.99
134	2	EOC: EOC: Other PT Losses	1.06	1.08	1.08	1.05	1.05	1.07	1.06
135	0	EOC: EOC: Other PT Losses	1.06	1.08	1.08	1.05	1.05	1.07	1.06
135	1	EOC: EOC: Other PT Losses	1.06	0.99	1.00	1.13	1.13	1.01	1.08
135	2	EOC: EOC: Other PT Losses	1.06	0.91	0.91	1.22	1.22	0.95	1.09
137	0	EOC: EOC: Other PT Losses	0.35	1.78	1.78	-1.22	-1.22	1.46	0.06
137	1	EOC: EOC: Other PT Losses	0.35	1.63	1.63	-1.05	-1.06	1.34	0.09
137	2	EOC: EOC: Other PT Losses	0.35	1.48	1.48	-0.89	-0.89	1.23	0.12
138	0	EOC: EOC: Other PT Losses	0.35	1.48	1.48	-0.89	-0.89	1.23	0.12
138	1	EOC: EOC: Other PT Losses	0.35	1.03	1.03	-0.40	-0.40	0.88	0.21
138	2	EOC: EOC: Other PT Losses	0.35	0.58	0.58	0.09	0.09	0.53	0.30
139	0	EOC: EOC: Other PT Losses	0.35	0.58	0.58	0.09	0.09	0.53	0.30
139	1	EOC: EOC: Other PT Losses	0.35	0.11	0.11	0.62	0.62	0.16	0.40
139	2	EOC: EOC: Other PT Losses	0.35	-0.37	-0.37	1.14	1.14	-0.21	0.50

MEMBER STRESSES

DECK & CANOPY MEMBERS
EOC

(-) compression

			UTILITIES (DW)						
Member	Station	Result Case	(P/A) @ Centroid (kips/ft²)	Normal Stress @ Point 1 (kips/ft²)	Normal Stress @ Point 2 (kips/ft²)	Normal Stress @ Point 3 (kips/ft²)	Normal Stress @ Point 4 (kips/ft²)	Normal Stress @ Point 5 (kips/ft²)	Normal Stress @ Point 6 (kips/ft²)
140	0	EOC: EOC: Other PT Losses	0.35	-0.37	-0.37	1.14	1.14	-0.21	0.50
140	1	EOC: EOC: Other PT Losses	0.35	-0.50	-0.50	1.28	1.28	-0.31	0.52
140	2	EOC: EOC: Other PT Losses	0.35	-0.63	-0.63	1.42	1.42	-0.41	0.55
142	0	EOC: EOC: Other PT Losses	0.60	0.81	0.81	0.37	0.37	0.77	0.56
142	1	EOC: EOC: Other PT Losses	0.60	0.78	0.78	0.40	0.40	0.74	0.56
142	2	EOC: EOC: Other PT Losses	0.60	0.75	0.75	0.44	0.44	0.72	0.57
143	0	EOC: EOC: Other PT Losses	0.60	0.75	0.75	0.44	0.44	0.72	0.57
143	1	EOC: EOC: Other PT Losses	0.60	0.68	0.68	0.51	0.51	0.66	0.58
143	2	EOC: EOC: Other PT Losses	0.60	0.61	0.61	0.59	0.59	0.61	0.60
144	0	EOC: EOC: Other PT Losses	0.60	0.61	0.61	0.59	0.59	0.61	0.60
144	1	EOC: EOC: Other PT Losses	0.60	0.54	0.54	0.67	0.67	0.56	0.61
144	2	EOC: EOC: Other PT Losses	0.60	0.47	0.47	0.74	0.74	0.50	0.63
145	0	EOC: EOC: Other PT Losses	0.60	0.47	0.47	0.74	0.74	0.50	0.63
145	1	EOC: EOC: Other PT Losses	0.60	0.45	0.45	0.77	0.77	0.48	0.63
145	2	EOC: EOC: Other PT Losses	0.60	0.42	0.42	0.80	0.80	0.46	0.64
147	0	EOC: EOC: Other PT Losses	0.52	2.84	2.84	-2.02	-2.02	2.32	0.04
147	1	EOC: EOC: Other PT Losses	0.52	2.47	2.47	-1.62	-1.62	2.04	0.12
147	2	EOC: EOC: Other PT Losses	0.52	2.11	2.11	-1.22	-1.22	1.75	0.20
148	0	EOC: EOC: Other PT Losses	0.52	2.11	2.11	-1.22	-1.22	1.75	0.20
148	1	EOC: EOC: Other PT Losses	0.52	1.45	1.45	-0.50	-0.50	1.24	0.33
148	2	EOC: EOC: Other PT Losses	0.52	0.79	0.79	0.23	0.23	0.73	0.47
149	0	EOC: EOC: Other PT Losses	0.52	0.79	0.79	0.23	0.23	0.73	0.47
149	1	EOC: EOC: Other PT Losses	0.52	0.08	0.08	1.01	1.01	0.18	0.61
149	2	EOC: EOC: Other PT Losses	0.52	-0.63	-0.63	1.78	1.78	-0.37	0.76
150	0	EOC: EOC: Other PT Losses	0.52	-0.63	-0.63	1.78	1.78	-0.37	0.76
150	1	EOC: EOC: Other PT Losses	0.52	-0.84	-0.84	2.02	2.02	-0.54	0.80
150	2	EOC: EOC: Other PT Losses	0.52	-1.05	-1.05	2.25	2.25	-0.70	0.84
152	0	EOC: EOC: Other PT Losses	0.42	1.81	1.81	-1.11	-1.11	1.50	0.13
152	1	EOC: EOC: Other PT Losses	0.42	1.51	1.51	-0.79	-0.79	1.27	0.19
152	2	EOC: EOC: Other PT Losses	0.42	1.22	1.22	-0.47	-0.47	1.04	0.25
153	0	EOC: EOC: Other PT Losses	0.42	1.22	1.22	-0.47	-0.47	1.04	0.25
153	1	EOC: EOC: Other PT Losses	0.42	0.74	0.74	0.06	0.06	0.67	0.35
153	2	EOC: EOC: Other PT Losses	0.42	0.26	0.26	0.59	0.59	0.29	0.45
154	0	EOC: EOC: Other PT Losses	0.42	0.26	0.26	0.59	0.59	0.29	0.45
154	1	EOC: EOC: Other PT Losses	0.42	-0.26	-0.26	1.16	1.16	-0.11	0.56
154	2	EOC: EOC: Other PT Losses	0.42	-0.78	-0.78	1.74	1.74	-0.52	0.66
155	0	EOC: EOC: Other PT Losses	0.42	-0.78	-0.78	1.74	1.74	-0.52	0.66
155	1	EOC: EOC: Other PT Losses	0.42	-0.95	-0.95	1.91	1.91	-0.64	0.70
155	2	EOC: EOC: Other PT Losses	0.42	-1.11	-1.11	2.09	2.09	-0.77	0.73
157	0	EOC: EOC: Other PT Losses	0.16	1.93	1.93	-1.79	-1.79	1.54	-0.21
157	1	EOC: EOC: Other PT Losses	0.16	1.62	1.62	-1.45	-1.45	1.30	-0.14
157	2	EOC: EOC: Other PT Losses	0.16	1.31	1.31	-1.11	-1.11	1.06	-0.08
158	0	EOC: EOC: Other PT Losses	0.16	1.31	1.31	-1.11	-1.11	1.06	-0.08
158	1	EOC: EOC: Other PT Losses	0.16	0.32	0.32	-0.02	-0.02	0.28	0.12
158	2	EOC: EOC: Other PT Losses	0.16	-0.67	-0.67	1.07	1.07	-0.49	0.33
159	0	EOC: EOC: Other PT Losses	0.16	-0.67	-0.67	1.07	1.07	-0.49	0.33
159	1	EOC: EOC: Other PT Losses	0.16	-1.68	-1.68	2.17	2.17	-1.27	0.54
159	2	EOC: EOC: Other PT Losses	0.16	-2.68	-2.68	3.28	3.28	-2.05	0.74

MEMBER STRESSES

DECK & CANOPY MEMBERS
EOC

(-) compression

			LIVE LOAD ON FULL LENGTH OF BRIDGE (LL1)						
Member	Station	Result Case	(P/A) @ Centroid (kips/ft²)	Normal Stress @ Point 1 (kips/ft²)	Normal Stress @ Point 2 (kips/ft²)	Normal Stress @ Point 3 (kips/ft²)	Normal Stress @ Point 4 (kips/ft²)	Normal Stress @ Point 5 (kips/ft²)	Normal Stress @ Point 6 (kips/ft²)
1	0	EOC: EOC: Other PT Losses	0.00	0.00	0.00	0.00	0.00	0.00	0.00
1	1	EOC: EOC: Other PT Losses	0.00	0.00	0.00	0.00	0.00	0.00	0.00
1	2	EOC: EOC: Other PT Losses	0.00	0.01	0.01	0.00	0.00	0.00	-0.01
2	0	EOC: EOC: Other PT Losses	-0.10	0.74	0.74	0.02	0.02	0.49	-1.37
2	1	EOC: EOC: Other PT Losses	-0.10	-4.34	-4.34	-0.72	-0.72	-3.05	6.28
2	2	EOC: EOC: Other PT Losses	-0.10	-9.39	-9.39	-1.46	-1.46	-6.57	13.87
3	0	EOC: EOC: Other PT Losses	5.94	2.62	2.62	5.45	5.45	3.63	10.93
3	1	EOC: EOC: Other PT Losses	5.94	-3.42	-3.42	4.57	4.57	-0.58	20.01
3	2	EOC: EOC: Other PT Losses	5.94	-7.98	-7.98	3.90	3.91	-3.75	26.86
4	0	EOC: EOC: Other PT Losses	5.94	-7.98	-7.98	3.90	3.91	-3.75	26.86
4	1	EOC: EOC: Other PT Losses	5.94	-12.75	-12.75	3.21	3.21	-7.07	34.04
4	2	EOC: EOC: Other PT Losses	5.95	-10.72	-10.73	3.50	3.51	-5.66	31.01
5	0	EOC: EOC: Other PT Losses	5.95	-10.72	-10.73	3.50	3.51	-5.66	31.01
5	1	EOC: EOC: Other PT Losses	5.95	-1.91	-1.92	4.79	4.81	0.47	17.77
5	2	EOC: EOC: Other PT Losses	5.95	13.69	13.67	7.07	7.09	11.33	-5.66
6	0	EOC: EOC: Other PT Losses	5.95	13.69	13.67	7.07	7.09	11.33	-5.66
6	1	EOC: EOC: Other PT Losses	5.95	16.29	16.27	7.46	7.47	13.14	-9.57
6	2	EOC: EOC: Other PT Losses	5.95	19.01	18.99	7.85	7.87	15.04	-13.66
7	0	EOC: EOC: Other PT Losses	5.15	20.16	20.14	7.34	7.35	15.59	-17.40
7	1	EOC: EOC: Other PT Losses	5.15	18.37	18.35	7.07	7.09	14.35	-14.71
7	2	EOC: EOC: Other PT Losses	5.15	16.61	16.59	6.82	6.83	13.12	-12.05
8	0	EOC: EOC: Other PT Losses	6.35	18.45	18.43	8.11	8.13	14.77	-11.82
8	1	EOC: EOC: Other PT Losses	6.35	11.30	11.28	7.07	7.08	9.79	-1.06
8	2	EOC: EOC: Other PT Losses	6.35	5.36	5.34	6.20	6.22	5.66	7.86
9	0	EOC: EOC: Other PT Losses	6.35	5.36	5.34	6.20	6.22	5.66	7.86
9	1	EOC: EOC: Other PT Losses	6.36	-4.13	-4.16	4.81	4.83	-0.95	22.15
9	2	EOC: EOC: Other PT Losses	6.36	-5.96	-5.99	4.54	4.57	-2.22	24.91
10	0	EOC: EOC: Other PT Losses	6.36	-5.96	-5.99	4.54	4.57	-2.22	24.91
10	1	EOC: EOC: Other PT Losses	6.37	-0.11	-0.14	5.40	5.43	1.85	16.13
10	2	EOC: EOC: Other PT Losses	6.37	13.41	13.38	7.38	7.41	11.26	-4.20
11	0	EOC: EOC: Other PT Losses	6.37	13.41	13.38	7.38	7.41	11.26	-4.20
11	1	EOC: EOC: Other PT Losses	6.37	15.82	15.79	7.73	7.77	12.94	-7.81
11	2	EOC: EOC: Other PT Losses	6.37	18.37	18.33	8.11	8.14	14.71	-11.64
12	0	EOC: EOC: Other PT Losses	6.34	18.21	18.17	8.05	8.09	14.59	-11.48
12	1	EOC: EOC: Other PT Losses	6.34	18.03	18.00	8.03	8.06	14.47	-11.21
12	2	EOC: EOC: Other PT Losses	6.34	17.88	17.84	8.01	8.04	14.36	-10.98
13	0	EOC: EOC: Other PT Losses	4.97	17.10	17.07	6.72	6.76	13.40	-13.25
13	1	EOC: EOC: Other PT Losses	4.97	10.82	10.78	5.80	5.84	9.03	-3.80
13	2	EOC: EOC: Other PT Losses	4.97	5.46	5.42	5.02	5.06	5.30	4.26
14	0	EOC: EOC: Other PT Losses	4.97	5.46	5.42	5.02	5.06	5.30	4.26
14	1	EOC: EOC: Other PT Losses	4.97	-5.37	-5.41	3.44	3.48	-2.24	20.55
14	2	EOC: EOC: Other PT Losses	4.98	-7.01	-7.06	3.20	3.24	-3.38	23.03
15	0	EOC: EOC: Other PT Losses	4.98	-7.01	-7.06	3.20	3.24	-3.38	23.03
15	1	EOC: EOC: Other PT Losses	4.98	0.53	0.48	4.30	4.35	1.87	11.71
15	2	EOC: EOC: Other PT Losses	4.98	17.25	17.20	6.75	6.80	13.51	-13.42
16	0	EOC: EOC: Other PT Losses	4.98	17.25	17.20	6.75	6.80	13.51	-13.42
16	1	EOC: EOC: Other PT Losses	4.99	19.80	19.74	7.12	7.17	15.28	-17.24
16	2	EOC: EOC: Other PT Losses	4.99	22.47	22.41	7.51	7.56	17.13	-21.25

MEMBER STRESSES

DECK & CANOPY MEMBERS
EOC

(-) compression

			LIVE LOAD ON FULL LENGTH OF BRIDGE (LL1)						
Member	Station	Result Case	(P/A) @ Centroid (kips/ft²)	Normal Stress @ Point 1 (kips/ft²)	Normal Stress @ Point 2 (kips/ft²)	Normal Stress @ Point 3 (kips/ft²)	Normal Stress @ Point 4 (kips/ft²)	Normal Stress @ Point 5 (kips/ft²)	Normal Stress @ Point 6 (kips/ft²)
17	0	EOC: EOC: Other PT Losses	4.86	20.24	20.19	7.08	7.14	15.55	-18.22
17	1	EOC: EOC: Other PT Losses	4.86	21.56	21.51	7.28	7.33	16.47	-20.20
17	2	EOC: EOC: Other PT Losses	4.86	22.91	22.85	7.47	7.53	17.40	-22.22
18	0	EOC: EOC: Other PT Losses	1.89	20.26	20.20	4.55	4.60	14.66	-25.67
18	1	EOC: EOC: Other PT Losses	1.89	14.44	14.38	3.70	3.75	10.61	-16.92
18	2	EOC: EOC: Other PT Losses	1.90	9.21	9.16	2.93	2.99	6.97	-9.06
19	0	EOC: EOC: Other PT Losses	1.90	9.21	9.16	2.93	2.99	6.97	-9.06
19	1	EOC: EOC: Other PT Losses	1.90	-6.41	-6.47	0.65	0.71	-3.91	14.44
19	2	EOC: EOC: Other PT Losses	1.90	-11.21	-11.27	-0.05	0.01	-7.24	21.66
20	0	EOC: EOC: Other PT Losses	1.90	-11.21	-11.27	-0.05	0.01	-7.24	21.66
20	1	EOC: EOC: Other PT Losses	1.91	-5.18	-5.25	0.83	0.90	-3.05	12.61
20	2	EOC: EOC: Other PT Losses	1.91	11.68	11.61	3.30	3.37	8.69	-12.71
21	0	EOC: EOC: Other PT Losses	1.91	11.68	11.61	3.30	3.37	8.69	-12.71
21	1	EOC: EOC: Other PT Losses	1.91	15.77	15.70	3.90	3.97	11.53	-18.86
21	2	EOC: EOC: Other PT Losses	1.91	20.20	20.13	4.55	4.62	14.62	-25.52
22	0	EOC: EOC: Other PT Losses	0.68	17.06	16.99	3.03	3.11	12.06	-23.89
22	1	EOC: EOC: Other PT Losses	0.68	19.73	19.66	3.42	3.50	13.91	-27.90
22	2	EOC: EOC: Other PT Losses	0.68	22.42	22.35	3.82	3.89	15.79	-31.95
23	0	EOC: EOC: Other PT Losses	-2.10	18.90	18.83	0.93	1.01	12.49	-33.60
23	1	EOC: EOC: Other PT Losses	-2.10	14.78	14.71	0.33	0.40	9.63	-27.41
23	2	EOC: EOC: Other PT Losses	-2.10	10.94	10.87	-0.23	-0.16	6.95	-21.63
24	0	EOC: EOC: Other PT Losses	-2.10	10.94	10.87	-0.23	-0.16	6.95	-21.63
24	1	EOC: EOC: Other PT Losses	-2.09	-7.66	-7.74	-2.95	-2.87	-5.99	6.34
24	2	EOC: EOC: Other PT Losses	-2.09	-13.85	-13.93	-3.85	-3.77	-10.30	15.66
25	0	EOC: EOC: Other PT Losses	-2.09	-13.85	-13.93	-3.85	-3.77	-10.30	15.66
25	1	EOC: EOC: Other PT Losses	-2.08	-7.63	-7.72	-2.94	-2.86	-5.98	6.33
25	2	EOC: EOC: Other PT Losses	-2.08	11.01	10.91	-0.22	-0.12	7.00	-21.67
26	0	EOC: EOC: Other PT Losses	-2.08	11.01	10.91	-0.22	-0.12	7.00	-21.67
26	1	EOC: EOC: Other PT Losses	-2.08	17.78	17.69	0.77	0.87	11.72	-31.86
26	2	EOC: EOC: Other PT Losses	-2.07	25.38	25.28	1.89	1.98	17.00	-43.27
29	0	EOC: EOC: Other PT Losses	-4.80	17.83	17.83	-1.49	-1.49	10.95	-38.83
29	1	EOC: EOC: Other PT Losses	-4.80	10.35	10.35	-2.59	-2.59	5.74	-27.58
29	2	EOC: EOC: Other PT Losses	-4.80	3.69	3.69	-3.56	-3.56	1.11	-17.57
30	0	EOC: EOC: Other PT Losses	-4.80	3.69	3.69	-3.56	-3.56	1.11	-17.57
30	1	EOC: EOC: Other PT Losses	-4.80	-14.25	-14.25	-6.18	-6.18	-11.38	9.42
30	2	EOC: EOC: Other PT Losses	-4.79	-19.78	-19.78	-6.98	-6.98	-15.22	17.74
31	0	EOC: EOC: Other PT Losses	-4.79	-19.78	-19.78	-6.98	-6.98	-15.22	17.74
31	1	EOC: EOC: Other PT Losses	-4.79	-12.89	-12.88	-5.97	-5.97	-10.42	7.39
31	2	EOC: EOC: Other PT Losses	-4.78	6.43	6.43	-3.14	-3.14	3.02	-21.63
32	0	EOC: EOC: Other PT Losses	-4.78	6.43	6.43	-3.14	-3.14	3.02	-21.63
32	1	EOC: EOC: Other PT Losses	-4.78	10.30	10.30	-2.58	-2.58	5.72	-27.46
32	2	EOC: EOC: Other PT Losses	-4.78	14.45	14.45	-1.97	-1.97	8.60	-33.69
33	0	EOC: EOC: Other PT Losses	-3.69	14.45	14.45	-1.04	-1.04	8.93	-30.96
33	1	EOC: EOC: Other PT Losses	-3.69	14.28	14.28	-1.06	-1.07	8.81	-30.71
33	2	EOC: EOC: Other PT Losses	-3.69	14.11	14.11	-1.09	-1.09	8.70	-30.46
34	0	EOC: EOC: Other PT Losses	-3.69	13.53	13.53	-1.17	-1.17	8.29	-29.57
34	1	EOC: EOC: Other PT Losses	-3.69	11.53	11.53	-1.46	-1.46	6.91	-26.57
34	2	EOC: EOC: Other PT Losses	-3.69	9.68	9.68	-1.73	-1.73	5.61	-23.78

MEMBER STRESSES

DECK & CANOPY MEMBERS
EOC

(-) compression

			LIVE LOAD ON FULL LENGTH OF BRIDGE (LL1)						
Member	Station	Result Case	(P/A) @ Centroid (kips/ft²)	Normal Stress @ Point 1 (kips/ft²)	Normal Stress @ Point 2 (kips/ft²)	Normal Stress @ Point 3 (kips/ft²)	Normal Stress @ Point 4 (kips/ft²)	Normal Stress @ Point 5 (kips/ft²)	Normal Stress @ Point 6 (kips/ft²)
35	0	EOC: EOC: Other PT Losses	-3.69	9.68	9.68	-1.73	-1.73	5.61	-23.78
35	1	EOC: EOC: Other PT Losses	-3.69	4.81	4.81	-2.44	-2.44	2.23	-16.46
35	2	EOC: EOC: Other PT Losses	-3.68	1.25	1.25	-2.96	-2.96	-0.25	-11.11
36	0	EOC: EOC: Other PT Losses	-3.68	1.25	1.25	-2.96	-2.96	-0.25	-11.11
36	1	EOC: EOC: Other PT Losses	-3.68	-0.99	-0.99	-3.29	-3.29	-1.81	-7.73
36	2	EOC: EOC: Other PT Losses	-3.68	-1.92	-1.92	-3.42	-3.42	-2.45	-6.34
37	0	EOC: EOC: Other PT Losses	-3.68	-1.92	-1.92	-3.42	-3.42	-2.45	-6.34
37	1	EOC: EOC: Other PT Losses	-3.68	-1.88	-1.88	-3.42	-3.42	-2.43	-6.39
37	2	EOC: EOC: Other PT Losses	-3.68	-1.49	-1.49	-3.36	-3.36	-2.15	-6.98
38	0	EOC: EOC: Other PT Losses	-2.99	-0.06	-0.06	-2.56	-2.56	-0.95	-7.40
38	1	EOC: EOC: Other PT Losses	-2.99	-0.35	-0.35	-2.60	-2.60	-1.15	-6.96
38	2	EOC: EOC: Other PT Losses	-2.99	-0.64	-0.64	-2.64	-2.65	-1.35	-6.52
39	0	EOC: EOC: Other PT Losses	-2.97	0.73	0.73	-2.43	-2.43	-0.39	-8.52
39	1	EOC: EOC: Other PT Losses	-2.97	-0.35	-0.35	-2.58	-2.58	-1.14	-6.90
39	2	EOC: EOC: Other PT Losses	-2.97	-1.30	-1.30	-2.72	-2.72	-1.81	-5.46
40	0	EOC: EOC: Other PT Losses	-2.97	-1.30	-1.30	-2.72	-2.72	-1.81	-5.46
40	1	EOC: EOC: Other PT Losses	-2.96	-3.42	-3.42	-3.03	-3.03	-3.28	-2.28
40	2	EOC: EOC: Other PT Losses	-2.96	-4.45	-4.45	-3.18	-3.18	-4.00	-0.73
41	0	EOC: EOC: Other PT Losses	-2.96	-4.45	-4.45	-3.18	-3.18	-4.00	-0.73
41	1	EOC: EOC: Other PT Losses	-2.96	-4.39	-4.39	-3.17	-3.17	-3.96	-0.81
41	2	EOC: EOC: Other PT Losses	-2.96	-3.24	-3.24	-3.00	-3.00	-3.15	-2.54
42	0	EOC: EOC: Other PT Losses	-2.96	-3.24	-3.24	-3.00	-3.00	-3.15	-2.54
42	1	EOC: EOC: Other PT Losses	-2.96	-1.98	-1.98	-2.82	-2.82	-2.28	-4.43
42	2	EOC: EOC: Other PT Losses	-2.96	-0.30	-0.30	-2.57	-2.57	-1.11	-6.96
43	0	EOC: EOC: Other PT Losses	-1.95	1.16	1.16	-1.49	-1.49	0.21	-6.61
43	1	EOC: EOC: Other PT Losses	-1.95	0.88	0.88	-1.53	-1.53	0.02	-6.19
43	2	EOC: EOC: Other PT Losses	-1.95	0.61	0.61	-1.57	-1.57	-0.17	-5.78
44	0	EOC: EOC: Other PT Losses	-1.91	2.01	2.01	-1.34	-1.34	0.82	-7.81
44	1	EOC: EOC: Other PT Losses	-1.91	0.84	0.85	-1.51	-1.51	0.01	-6.06
44	2	EOC: EOC: Other PT Losses	-1.91	-0.20	-0.20	-1.66	-1.66	-0.72	-4.49
45	0	EOC: EOC: Other PT Losses	-1.91	-0.20	-0.20	-1.66	-1.66	-0.72	-4.49
45	1	EOC: EOC: Other PT Losses	-1.91	-2.49	-2.48	-2.00	-2.00	-2.31	-1.05
45	2	EOC: EOC: Other PT Losses	-1.91	-3.83	-3.83	-2.19	-2.19	-3.25	0.97
46	0	EOC: EOC: Other PT Losses	-1.91	-3.83	-3.83	-2.19	-2.19	-3.25	0.97
46	1	EOC: EOC: Other PT Losses	-1.91	-4.23	-4.23	-2.25	-2.25	-3.53	1.58
46	2	EOC: EOC: Other PT Losses	-1.91	-3.69	-3.69	-2.17	-2.17	-3.15	0.78
47	0	EOC: EOC: Other PT Losses	-1.91	-3.69	-3.69	-2.17	-2.17	-3.15	0.78
47	1	EOC: EOC: Other PT Losses	-1.91	-2.74	-2.74	-2.03	-2.03	-2.49	-0.66
47	2	EOC: EOC: Other PT Losses	-1.91	-1.31	-1.31	-1.82	-1.82	-1.49	-2.81
48	0	EOC: EOC: Other PT Losses	-1.05	-0.06	-0.06	-0.90	-0.90	-0.36	-2.54
48	1	EOC: EOC: Other PT Losses	-1.05	-0.26	-0.26	-0.93	-0.93	-0.50	-2.23
48	2	EOC: EOC: Other PT Losses	-1.05	-0.46	-0.46	-0.96	-0.96	-0.64	-1.92
49	0	EOC: EOC: Other PT Losses	-1.13	0.53	0.53	-0.89	-0.89	0.02	-3.63
49	1	EOC: EOC: Other PT Losses	-1.13	0.39	0.40	-0.91	-0.91	-0.07	-3.43
49	2	EOC: EOC: Other PT Losses	-1.13	0.38	0.38	-0.91	-0.91	-0.08	-3.41
50	0	EOC: EOC: Other PT Losses	-1.13	0.38	0.38	-0.91	-0.91	-0.08	-3.41
50	1	EOC: EOC: Other PT Losses	-1.13	0.93	0.93	-0.83	-0.83	0.30	-4.23
50	2	EOC: EOC: Other PT Losses	-1.13	2.31	2.31	-0.63	-0.63	1.26	-6.30

MEMBER STRESSES

DECK & CANOPY MEMBERS
EOC

(-) compression

			LIVE LOAD ON FULL LENGTH OF BRIDGE (LL1)						
Member	Station	Result Case	(P/A) @ Centroid (kips/ft²)	Normal Stress @ Point 1 (kips/ft²)	Normal Stress @ Point 2 (kips/ft²)	Normal Stress @ Point 3 (kips/ft²)	Normal Stress @ Point 4 (kips/ft²)	Normal Stress @ Point 5 (kips/ft²)	Normal Stress @ Point 6 (kips/ft²)
51	0	EOC: EOC: Other PT Losses	-1.13	2.31	2.31	-0.63	-0.63	1.26	-6.30
51	1	EOC: EOC: Other PT Losses	-1.13	4.53	4.53	-0.30	-0.30	2.81	-9.63
51	2	EOC: EOC: Other PT Losses	-1.13	7.58	7.58	0.15	0.15	4.93	-14.22
52	0	EOC: EOC: Other PT Losses	-1.13	7.58	7.58	0.15	0.15	4.93	-14.22
52	1	EOC: EOC: Other PT Losses	-1.13	10.60	10.60	0.59	0.59	7.04	-18.76
52	2	EOC: EOC: Other PT Losses	-1.13	14.15	14.15	1.11	1.11	9.51	-24.09
60	0	EOC: EOC: Other PT Losses	0.00	0.00	0.00	0.00	0.00	0.00	0.00
60	1	EOC: EOC: Other PT Losses	0.00	0.00	0.00	0.00	0.00	0.00	0.00
60	2	EOC: EOC: Other PT Losses	0.00	0.00	0.00	0.00	0.00	0.00	0.00
101	0	EOC: EOC: Other PT Losses	0.00	0.00	0.00	0.00	0.00	0.00	0.00
101	1	EOC: EOC: Other PT Losses	0.00	0.00	0.00	0.00	0.00	0.00	0.00
101	2	EOC: EOC: Other PT Losses	0.00	0.00	0.00	0.00	0.00	0.00	0.00
102	0	EOC: EOC: Other PT Losses	0.00	0.00	0.00	0.00	0.00	0.00	0.00
102	1	EOC: EOC: Other PT Losses	0.00	0.00	0.00	0.00	0.00	0.00	0.00
102	2	EOC: EOC: Other PT Losses	0.00	0.00	0.00	0.00	0.00	0.00	0.00
103	0	EOC: EOC: Other PT Losses	0.00	0.00	0.00	0.00	0.00	0.00	0.00
103	1	EOC: EOC: Other PT Losses	0.00	0.00	0.00	0.00	0.00	0.00	0.00
103	2	EOC: EOC: Other PT Losses	0.00	0.00	0.00	0.00	0.00	0.00	0.00
104	0	EOC: EOC: Other PT Losses	0.00	0.00	0.00	0.00	0.00	0.00	0.00
104	1	EOC: EOC: Other PT Losses	0.00	0.00	0.00	0.00	0.00	0.00	0.00
104	2	EOC: EOC: Other PT Losses	0.00	0.00	0.00	0.00	0.00	0.00	0.00
106	0	EOC: EOC: Other PT Losses	-14.83	3.59	3.59	-35.05	-35.05	-0.52	-18.62
106	1	EOC: EOC: Other PT Losses	-14.83	2.33	2.33	-33.68	-33.68	-1.49	-18.37
106	2	EOC: EOC: Other PT Losses	-14.83	1.08	1.07	-32.30	-32.30	-2.47	-18.11
107	0	EOC: EOC: Other PT Losses	-14.83	1.08	1.07	-32.30	-32.30	-2.47	-18.11
107	1	EOC: EOC: Other PT Losses	-14.83	-6.48	-6.49	-24.00	-23.99	-8.35	-16.55
107	2	EOC: EOC: Other PT Losses	-14.83	-14.04	-14.05	-15.70	-15.69	-14.22	-14.99
108	0	EOC: EOC: Other PT Losses	-14.83	-14.04	-14.05	-15.70	-15.69	-14.22	-14.99
108	1	EOC: EOC: Other PT Losses	-14.83	-21.19	-21.20	-7.85	-7.84	-19.78	-13.52
108	2	EOC: EOC: Other PT Losses	-14.83	-28.34	-28.35	0.00	0.01	-25.33	-12.05
109	0	EOC: EOC: Other PT Losses	-14.83	-28.34	-28.35	0.00	0.01	-25.33	-12.05
109	1	EOC: EOC: Other PT Losses	-14.83	-30.95	-30.96	2.87	2.87	-27.36	-11.51
109	2	EOC: EOC: Other PT Losses	-14.83	-33.57	-33.57	5.74	5.74	-29.39	-10.98
111	0	EOC: EOC: Other PT Losses	-20.30	-29.81	-29.82	-9.85	-9.84	-27.69	-18.34
111	1	EOC: EOC: Other PT Losses	-20.30	-29.35	-29.35	-10.36	-10.36	-27.33	-18.43
111	2	EOC: EOC: Other PT Losses	-20.30	-28.88	-28.88	-10.87	-10.87	-26.97	-18.53
112	0	EOC: EOC: Other PT Losses	-20.30	-28.88	-28.88	-10.87	-10.87	-26.97	-18.53
112	1	EOC: EOC: Other PT Losses	-20.30	-26.76	-26.77	-13.19	-13.19	-25.32	-18.96
112	2	EOC: EOC: Other PT Losses	-20.30	-24.65	-24.66	-15.52	-15.51	-23.68	-19.40
113	0	EOC: EOC: Other PT Losses	-20.30	-24.65	-24.66	-15.52	-15.51	-23.68	-19.40
113	1	EOC: EOC: Other PT Losses	-20.30	-22.40	-22.40	-17.99	-17.98	-21.93	-19.86
113	2	EOC: EOC: Other PT Losses	-20.30	-20.14	-20.15	-20.46	-20.45	-20.18	-20.33
114	0	EOC: EOC: Other PT Losses	-20.30	-20.14	-20.15	-20.46	-20.45	-20.18	-20.33
114	1	EOC: EOC: Other PT Losses	-20.30	-19.61	-19.62	-21.04	-21.04	-19.77	-20.44
114	2	EOC: EOC: Other PT Losses	-20.30	-19.09	-19.09	-21.62	-21.62	-19.36	-20.54
116	0	EOC: EOC: Other PT Losses	-19.34	-27.78	-27.79	-10.07	-10.06	-25.90	-17.60
116	1	EOC: EOC: Other PT Losses	-19.34	-27.26	-27.27	-10.64	-10.63	-25.50	-17.71
116	2	EOC: EOC: Other PT Losses	-19.34	-26.74	-26.75	-11.21	-11.20	-25.10	-17.81

MEMBER STRESSES

DECK & CANOPY MEMBERS
EOC

(-) compression

			LIVE LOAD ON FULL LENGTH OF BRIDGE (LL1)						
Member	Station	Result Case	(P/A) @ Centroid (kips/ft²)	Normal Stress @ Point 1 (kips/ft²)	Normal Stress @ Point 2 (kips/ft²)	Normal Stress @ Point 3 (kips/ft²)	Normal Stress @ Point 4 (kips/ft²)	Normal Stress @ Point 5 (kips/ft²)	Normal Stress @ Point 6 (kips/ft²)
117	0	EOC: EOC: Other PT Losses	-19.34	-26.74	-26.75	-11.21	-11.20	-25.10	-17.81
117	1	EOC: EOC: Other PT Losses	-19.34	-23.72	-23.73	-14.52	-14.52	-22.75	-18.43
117	2	EOC: EOC: Other PT Losses	-19.34	-20.70	-20.71	-17.84	-17.83	-20.40	-19.06
118	0	EOC: EOC: Other PT Losses	-19.34	-20.70	-20.71	-17.84	-17.83	-20.40	-19.06
118	1	EOC: EOC: Other PT Losses	-19.34	-17.59	-17.60	-21.26	-21.25	-17.98	-19.70
118	2	EOC: EOC: Other PT Losses	-19.34	-14.48	-14.49	-24.67	-24.66	-15.56	-20.34
119	0	EOC: EOC: Other PT Losses	-19.34	-14.48	-14.49	-24.67	-24.66	-15.56	-20.34
119	1	EOC: EOC: Other PT Losses	-19.34	-13.91	-13.92	-25.30	-25.29	-15.12	-20.46
119	2	EOC: EOC: Other PT Losses	-19.34	-13.33	-13.34	-25.93	-25.92	-14.67	-20.57
121	0	EOC: EOC: Other PT Losses	-11.19	-18.63	-18.64	-3.02	-3.01	-16.98	-9.66
121	1	EOC: EOC: Other PT Losses	-11.19	-18.23	-18.24	-3.47	-3.46	-16.66	-9.74
121	2	EOC: EOC: Other PT Losses	-11.19	-17.82	-17.83	-3.91	-3.90	-16.35	-9.83
122	0	EOC: EOC: Other PT Losses	-11.19	-17.82	-17.83	-3.91	-3.90	-16.35	-9.83
122	1	EOC: EOC: Other PT Losses	-11.19	-14.75	-14.76	-7.29	-7.28	-13.96	-10.46
122	2	EOC: EOC: Other PT Losses	-11.19	-11.67	-11.69	-10.66	-10.65	-11.57	-11.09
123	0	EOC: EOC: Other PT Losses	-11.19	-11.67	-11.69	-10.66	-10.65	-11.57	-11.09
123	1	EOC: EOC: Other PT Losses	-11.19	-8.60	-8.61	-14.03	-14.02	-9.18	-11.72
123	2	EOC: EOC: Other PT Losses	-11.19	-5.53	-5.54	-17.41	-17.40	-6.80	-12.36
124	0	EOC: EOC: Other PT Losses	-11.19	-5.53	-5.54	-17.41	-17.40	-6.80	-12.36
124	1	EOC: EOC: Other PT Losses	-11.19	-5.17	-5.18	-17.80	-17.79	-6.52	-12.43
124	2	EOC: EOC: Other PT Losses	-11.19	-4.82	-4.83	-18.19	-18.18	-6.24	-12.50
126	0	EOC: EOC: Other PT Losses	2.75	-10.53	-10.54	17.33	17.34	-7.57	5.48
126	1	EOC: EOC: Other PT Losses	2.75	-9.03	-9.04	15.69	15.70	-6.41	5.18
126	2	EOC: EOC: Other PT Losses	2.75	-7.53	-7.55	14.04	14.05	-5.25	4.87
127	0	EOC: EOC: Other PT Losses	2.75	-7.53	-7.55	14.04	14.05	-5.25	4.87
127	1	EOC: EOC: Other PT Losses	2.75	-1.98	-1.99	7.95	7.96	-0.93	3.73
127	2	EOC: EOC: Other PT Losses	2.75	3.57	3.56	1.85	1.86	3.39	2.58
128	0	EOC: EOC: Other PT Losses	2.75	3.57	3.56	1.85	1.86	3.39	2.58
128	1	EOC: EOC: Other PT Losses	2.75	9.20	9.19	-4.33	-4.32	7.76	1.42
133	0	EOC: EOC: Other PT Losses	3.88	8.59	8.59	-1.28	-1.29	7.54	2.91
133	1	EOC: EOC: Other PT Losses	3.88	7.42	7.43	-0.01	-0.01	6.64	3.15
133	2	EOC: EOC: Other PT Losses	3.88	6.26	6.27	1.27	1.27	5.73	3.39
134	0	EOC: EOC: Other PT Losses	3.88	6.26	6.27	1.27	1.27	5.73	3.39
134	1	EOC: EOC: Other PT Losses	3.88	5.10	5.10	2.55	2.55	4.83	3.63
134	2	EOC: EOC: Other PT Losses	3.88	3.93	3.94	3.83	3.83	3.92	3.87
135	0	EOC: EOC: Other PT Losses	3.88	3.93	3.94	3.83	3.83	3.92	3.87
135	1	EOC: EOC: Other PT Losses	3.88	3.64	3.64	4.15	4.15	3.69	3.93
135	2	EOC: EOC: Other PT Losses	3.88	3.34	3.35	4.48	4.47	3.46	3.99
137	0	EOC: EOC: Other PT Losses	1.28	6.50	6.50	-4.46	-4.46	5.34	0.20
137	1	EOC: EOC: Other PT Losses	1.28	5.96	5.96	-3.86	-3.86	4.91	0.31
137	2	EOC: EOC: Other PT Losses	1.28	5.41	5.41	-3.26	-3.26	4.49	0.43
138	0	EOC: EOC: Other PT Losses	1.28	5.41	5.41	-3.26	-3.26	4.49	0.43
138	1	EOC: EOC: Other PT Losses	1.28	3.77	3.77	-1.46	-1.46	3.21	0.76
138	2	EOC: EOC: Other PT Losses	1.28	2.13	2.13	0.34	0.34	1.94	1.10
139	0	EOC: EOC: Other PT Losses	1.28	2.13	2.13	0.34	0.34	1.94	1.10
139	1	EOC: EOC: Other PT Losses	1.28	0.39	0.39	2.25	2.25	0.59	1.46
139	2	EOC: EOC: Other PT Losses	1.28	-1.35	-1.35	4.17	4.16	-0.77	1.82

MEMBER STRESSES

DECK & CANOPY MEMBERS
EOC

(-) compression

			LIVE LOAD ON FULL LENGTH OF BRIDGE (LL1)						
Member	Station	Result Case	(P/A) @ Centroid (kips/ft²)	Normal Stress @ Point 1 (kips/ft²)	Normal Stress @ Point 2 (kips/ft²)	Normal Stress @ Point 3 (kips/ft²)	Normal Stress @ Point 4 (kips/ft²)	Normal Stress @ Point 5 (kips/ft²)	Normal Stress @ Point 6 (kips/ft²)
140	0	EOC: EOC: Other PT Losses	1.28	-1.35	-1.35	4.16	4.16	-0.77	1.82
140	1	EOC: EOC: Other PT Losses	1.28	-1.83	-1.83	4.69	4.68	-1.14	1.92
140	2	EOC: EOC: Other PT Losses	1.28	-2.30	-2.30	5.21	5.21	-1.51	2.01
142	0	EOC: EOC: Other PT Losses	2.20	2.98	2.98	1.34	1.34	2.80	2.04
142	1	EOC: EOC: Other PT Losses	2.20	2.86	2.86	1.47	1.47	2.71	2.06
142	2	EOC: EOC: Other PT Losses	2.20	2.74	2.75	1.60	1.60	2.62	2.09
143	0	EOC: EOC: Other PT Losses	2.20	2.74	2.75	1.60	1.60	2.62	2.09
143	1	EOC: EOC: Other PT Losses	2.20	2.49	2.49	1.88	1.88	2.43	2.14
143	2	EOC: EOC: Other PT Losses	2.20	2.23	2.24	2.16	2.16	2.23	2.19
144	0	EOC: EOC: Other PT Losses	2.20	2.23	2.24	2.16	2.16	2.23	2.19
144	1	EOC: EOC: Other PT Losses	2.20	1.98	1.98	2.44	2.43	2.03	2.24
144	2	EOC: EOC: Other PT Losses	2.20	1.73	1.73	2.71	2.71	1.83	2.30
145	0	EOC: EOC: Other PT Losses	2.20	1.73	1.73	2.71	2.71	1.83	2.29
145	1	EOC: EOC: Other PT Losses	2.20	1.64	1.64	2.81	2.81	1.76	2.31
145	2	EOC: EOC: Other PT Losses	2.20	1.55	1.55	2.91	2.91	1.69	2.33
147	0	EOC: EOC: Other PT Losses	1.91	10.38	10.38	-7.39	-7.39	8.49	0.16
147	1	EOC: EOC: Other PT Losses	1.91	9.04	9.04	-5.92	-5.93	7.45	0.44
147	2	EOC: EOC: Other PT Losses	1.91	7.70	7.71	-4.46	-4.46	6.41	0.71
148	0	EOC: EOC: Other PT Losses	1.91	7.70	7.71	-4.46	-4.46	6.41	0.71
148	1	EOC: EOC: Other PT Losses	1.91	5.29	5.30	-1.81	-1.81	4.54	1.21
148	2	EOC: EOC: Other PT Losses	1.91	2.88	2.89	0.83	0.83	2.67	1.71
149	0	EOC: EOC: Other PT Losses	1.91	2.88	2.89	0.83	0.83	2.67	1.71
149	1	EOC: EOC: Other PT Losses	1.91	0.29	0.29	3.68	3.68	0.65	2.24
149	2	EOC: EOC: Other PT Losses	1.91	-2.30	-2.30	6.53	6.53	-1.36	2.77
150	0	EOC: EOC: Other PT Losses	1.91	-2.30	-2.30	6.53	6.53	-1.36	2.77
150	1	EOC: EOC: Other PT Losses	1.91	-3.07	-3.07	7.37	7.37	-1.96	2.93
150	2	EOC: EOC: Other PT Losses	1.91	-3.84	-3.84	8.22	8.22	-2.56	3.09
152	0	EOC: EOC: Other PT Losses	1.52	6.61	6.61	-4.06	-4.06	5.48	0.48
152	1	EOC: EOC: Other PT Losses	1.52	5.54	5.54	-2.88	-2.88	4.64	0.70
152	2	EOC: EOC: Other PT Losses	1.52	4.46	4.46	-1.70	-1.70	3.81	0.92
153	0	EOC: EOC: Other PT Losses	1.52	4.46	4.46	-1.70	-1.70	3.81	0.92
153	1	EOC: EOC: Other PT Losses	1.52	2.70	2.71	0.23	0.23	2.44	1.28
153	2	EOC: EOC: Other PT Losses	1.52	0.95	0.95	2.16	2.16	1.07	1.64
154	0	EOC: EOC: Other PT Losses	1.52	0.95	0.95	2.16	2.16	1.08	1.64
154	1	EOC: EOC: Other PT Losses	1.52	-0.96	-0.96	4.25	4.25	-0.41	2.04
154	2	EOC: EOC: Other PT Losses	1.52	-2.87	-2.87	6.35	6.35	-1.89	2.43
155	0	EOC: EOC: Other PT Losses	1.52	-2.87	-2.87	6.35	6.35	-1.89	2.43
155	1	EOC: EOC: Other PT Losses	1.52	-3.47	-3.47	7.01	7.00	-2.36	2.55
155	2	EOC: EOC: Other PT Losses	1.52	-4.07	-4.07	7.66	7.66	-2.82	2.68
157	0	EOC: EOC: Other PT Losses	0.58	7.07	7.07	-6.56	-6.56	5.63	-0.76
157	1	EOC: EOC: Other PT Losses	0.58	5.94	5.94	-5.31	-5.31	4.75	-0.53
157	2	EOC: EOC: Other PT Losses	0.58	4.81	4.81	-4.07	-4.07	3.87	-0.29
158	0	EOC: EOC: Other PT Losses	0.58	4.81	4.81	-4.07	-4.07	3.86	-0.29
158	1	EOC: EOC: Other PT Losses	0.58	1.18	1.18	-0.08	-0.08	1.04	0.45
158	2	EOC: EOC: Other PT Losses	0.58	-2.46	-2.46	3.90	3.91	-1.78	1.20
159	0	EOC: EOC: Other PT Losses	0.58	-2.46	-2.46	3.90	3.91	-1.78	1.20
159	1	EOC: EOC: Other PT Losses	0.58	-6.14	-6.14	7.95	7.95	-4.64	1.96
159	2	EOC: EOC: Other PT Losses	0.58	-9.82	-9.82	11.99	11.99	-7.50	2.72

MEMBER STRESSES

DECK & CANOPY MEMBERS
EOC

(-) compression

			LIVE LOAD ON MAIN SPAN (LL2)						
Member	Station	Result Case	(P/A) @ Centroid (kips/ft²)	Normal Stress @ Point 1 (kips/ft²)	Normal Stress @ Point 2 (kips/ft²)	Normal Stress @ Point 3 (kips/ft²)	Normal Stress @ Point 4 (kips/ft²)	Normal Stress @ Point 5 (kips/ft²)	Normal Stress @ Point 6 (kips/ft²)
1	0	EOC: EOC: Other PT Losses	0.00	0.00	0.00	0.00	0.00	0.00	0.00
1	1	EOC: EOC: Other PT Losses	0.00	0.00	0.00	0.00	0.00	0.00	0.00
1	2	EOC: EOC: Other PT Losses	0.00	0.01	0.01	0.00	0.00	0.00	-0.01
2	0	EOC: EOC: Other PT Losses	-0.13	1.00	1.00	0.04	0.04	0.66	-1.82
2	1	EOC: EOC: Other PT Losses	-0.13	-4.76	-4.76	-0.80	-0.80	-3.35	6.84
2	2	EOC: EOC: Other PT Losses	-0.13	-10.48	-10.48	-1.64	-1.64	-7.33	15.44
3	0	EOC: EOC: Other PT Losses	6.94	2.92	2.92	6.35	6.36	4.14	12.99
3	1	EOC: EOC: Other PT Losses	6.94	-3.08	-3.08	5.48	5.48	-0.03	22.01
3	2	EOC: EOC: Other PT Losses	6.95	-7.60	-7.60	4.81	4.82	-3.18	28.81
4	0	EOC: EOC: Other PT Losses	6.95	-7.60	-7.60	4.81	4.82	-3.18	28.81
4	1	EOC: EOC: Other PT Losses	6.95	-12.29	-12.30	4.13	4.14	-6.45	35.88
4	2	EOC: EOC: Other PT Losses	6.95	-10.18	-10.20	4.43	4.46	-4.98	32.73
5	0	EOC: EOC: Other PT Losses	6.95	-10.18	-10.20	4.43	4.46	-4.98	32.73
5	1	EOC: EOC: Other PT Losses	6.96	-1.29	-1.32	5.73	5.77	1.21	19.37
5	2	EOC: EOC: Other PT Losses	6.96	14.39	14.35	8.02	8.06	12.12	-4.18
6	0	EOC: EOC: Other PT Losses	6.96	14.39	14.35	8.02	8.06	12.12	-4.18
6	1	EOC: EOC: Other PT Losses	6.96	17.00	16.96	8.40	8.45	13.94	-8.11
6	2	EOC: EOC: Other PT Losses	6.96	19.74	19.69	8.80	8.85	15.84	-12.21
7	0	EOC: EOC: Other PT Losses	6.08	21.53	21.49	8.31	8.35	16.82	-17.12
7	1	EOC: EOC: Other PT Losses	6.08	19.37	19.33	7.99	8.04	15.31	-13.87
7	2	EOC: EOC: Other PT Losses	6.08	17.23	17.19	7.68	7.73	13.83	-10.66
8	0	EOC: EOC: Other PT Losses	7.91	19.80	19.76	9.63	9.67	16.17	-9.93
8	1	EOC: EOC: Other PT Losses	7.91	12.60	12.55	8.57	8.62	11.16	0.90
8	2	EOC: EOC: Other PT Losses	7.92	6.62	6.57	7.70	7.75	7.00	9.90
9	0	EOC: EOC: Other PT Losses	7.92	6.62	6.57	7.70	7.75	7.00	9.90
9	1	EOC: EOC: Other PT Losses	7.92	-3.00	-3.06	6.29	6.35	0.30	24.38
9	2	EOC: EOC: Other PT Losses	7.92	-4.95	-5.02	6.00	6.07	-1.06	27.33
10	0	EOC: EOC: Other PT Losses	7.92	-4.95	-5.02	6.00	6.07	-1.06	27.33
10	1	EOC: EOC: Other PT Losses	7.93	0.77	0.70	6.84	6.91	2.92	18.74
10	2	EOC: EOC: Other PT Losses	7.93	14.18	14.09	8.80	8.88	12.25	-1.40
11	0	EOC: EOC: Other PT Losses	7.93	14.18	14.09	8.80	8.88	12.25	-1.40
11	1	EOC: EOC: Other PT Losses	7.93	16.57	16.48	9.15	9.23	13.91	-4.99
11	2	EOC: EOC: Other PT Losses	7.93	19.10	19.01	9.52	9.60	15.67	-8.79
12	0	EOC: EOC: Other PT Losses	7.91	19.49	19.40	9.56	9.64	15.94	-9.42
12	1	EOC: EOC: Other PT Losses	7.91	19.08	18.99	9.50	9.58	15.65	-8.80
12	2	EOC: EOC: Other PT Losses	7.91	18.69	18.60	9.44	9.53	15.38	-8.22
13	0	EOC: EOC: Other PT Losses	6.90	18.35	18.26	8.53	8.61	14.84	-10.24
13	1	EOC: EOC: Other PT Losses	6.90	12.08	11.99	7.61	7.70	10.47	-0.81
13	2	EOC: EOC: Other PT Losses	6.90	6.73	6.64	6.83	6.92	6.75	7.24
14	0	EOC: EOC: Other PT Losses	6.90	6.73	6.64	6.83	6.92	6.75	7.24
14	1	EOC: EOC: Other PT Losses	6.91	-4.07	-4.17	5.25	5.34	-0.77	23.49
14	2	EOC: EOC: Other PT Losses	6.91	-5.68	-5.79	5.01	5.12	-1.89	25.93
15	0	EOC: EOC: Other PT Losses	6.91	-5.68	-5.79	5.01	5.12	-1.89	25.93
15	1	EOC: EOC: Other PT Losses	6.92	1.89	1.77	6.11	6.23	3.38	14.56
15	2	EOC: EOC: Other PT Losses	6.92	18.64	18.52	8.56	8.69	15.04	-10.61
16	0	EOC: EOC: Other PT Losses	6.92	18.64	18.52	8.56	8.69	15.04	-10.61
16	1	EOC: EOC: Other PT Losses	6.92	21.19	21.06	8.93	9.06	16.81	-14.43
16	2	EOC: EOC: Other PT Losses	6.92	23.86	23.74	9.33	9.45	18.67	-18.45

MEMBER STRESSES

DECK & CANOPY MEMBERS
EOC

(-) compression

			LIVE LOAD ON MAIN SPAN (LL2)						
Member	Station	Result Case	(P/A) @ Centroid (kips/ft²)	Normal Stress @ Point 1 (kips/ft²)	Normal Stress @ Point 2 (kips/ft²)	Normal Stress @ Point 3 (kips/ft²)	Normal Stress @ Point 4 (kips/ft²)	Normal Stress @ Point 5 (kips/ft²)	Normal Stress @ Point 6 (kips/ft²)
17	0	EOC: EOC: Other PT Losses	6.82	21.76	21.63	8.93	9.06	17.18	-15.54
17	1	EOC: EOC: Other PT Losses	6.82	23.02	22.89	9.12	9.25	18.05	-17.43
17	2	EOC: EOC: Other PT Losses	6.82	24.30	24.17	9.31	9.43	18.94	-19.35
18	0	EOC: EOC: Other PT Losses	3.92	21.80	21.67	6.46	6.59	16.32	-22.84
18	1	EOC: EOC: Other PT Losses	3.92	15.97	15.84	5.61	5.74	12.26	-14.08
18	2	EOC: EOC: Other PT Losses	3.93	10.74	10.61	4.85	4.98	8.62	-6.21
19	0	EOC: EOC: Other PT Losses	3.93	10.74	10.61	4.85	4.98	8.62	-6.21
19	1	EOC: EOC: Other PT Losses	3.93	-4.91	-5.05	2.56	2.70	-2.27	17.32
19	2	EOC: EOC: Other PT Losses	3.93	-9.73	-9.88	1.85	2.00	-5.63	24.59
20	0	EOC: EOC: Other PT Losses	3.93	-9.73	-9.88	1.85	2.00	-5.63	24.59
20	1	EOC: EOC: Other PT Losses	3.94	-3.72	-3.88	2.73	2.89	-1.45	15.58
20	2	EOC: EOC: Other PT Losses	3.94	13.11	12.94	5.19	5.36	10.27	-9.71
21	0	EOC: EOC: Other PT Losses	3.94	13.11	12.94	5.19	5.36	10.27	-9.71
21	1	EOC: EOC: Other PT Losses	3.94	17.20	17.03	5.78	5.96	13.11	-15.85
21	2	EOC: EOC: Other PT Losses	3.94	21.63	21.45	6.43	6.60	16.19	-22.50
22	0	EOC: EOC: Other PT Losses	2.58	18.29	18.11	4.78	4.95	13.45	-20.90
22	1	EOC: EOC: Other PT Losses	2.58	21.11	20.94	5.19	5.36	15.42	-25.14
22	2	EOC: EOC: Other PT Losses	2.58	23.96	23.79	5.61	5.78	17.40	-29.42
23	0	EOC: EOC: Other PT Losses	-0.31	20.21	20.04	2.59	2.77	13.92	-31.02
23	1	EOC: EOC: Other PT Losses	-0.31	16.11	15.93	1.99	2.17	11.06	-24.85
23	2	EOC: EOC: Other PT Losses	-0.31	12.28	12.11	1.43	1.61	8.39	-19.09
24	0	EOC: EOC: Other PT Losses	-0.31	12.28	12.11	1.43	1.61	8.39	-19.09
24	1	EOC: EOC: Other PT Losses	-0.30	-6.22	-6.41	-1.27	-1.09	-4.49	8.75
24	2	EOC: EOC: Other PT Losses	-0.30	-12.33	-12.52	-2.17	-1.97	-8.74	17.94
25	0	EOC: EOC: Other PT Losses	-0.30	-12.33	-12.52	-2.17	-1.97	-8.74	17.94
25	1	EOC: EOC: Other PT Losses	-0.29	-6.02	-6.22	-1.25	-1.04	-4.35	8.48
25	2	EOC: EOC: Other PT Losses	-0.29	12.71	12.49	1.49	1.71	8.68	-19.66
26	0	EOC: EOC: Other PT Losses	-0.29	12.71	12.49	1.49	1.71	8.68	-19.66
26	1	EOC: EOC: Other PT Losses	-0.29	19.51	19.29	2.48	2.70	13.42	-29.88
26	2	EOC: EOC: Other PT Losses	-0.28	27.13	26.91	3.60	3.82	18.72	-41.32
29	0	EOC: EOC: Other PT Losses	-5.53	-7.07	-7.24	-5.85	-5.68	-6.66	-3.08
29	1	EOC: EOC: Other PT Losses	-5.53	-6.80	-6.96	-5.81	-5.64	-6.47	-3.49
29	2	EOC: EOC: Other PT Losses	-5.53	-6.53	-6.69	-5.77	-5.61	-6.28	-3.90
30	0	EOC: EOC: Other PT Losses	-5.53	-6.53	-6.69	-5.77	-5.61	-6.28	-3.90
30	1	EOC: EOC: Other PT Losses	-5.53	-5.48	-5.62	-5.60	-5.46	-5.54	-5.49
30	2	EOC: EOC: Other PT Losses	-5.53	-4.43	-4.56	-5.44	-5.31	-4.81	-7.08
31	0	EOC: EOC: Other PT Losses	-5.53	-4.43	-4.56	-5.44	-5.31	-4.81	-7.08
31	1	EOC: EOC: Other PT Losses	-5.53	-3.38	-3.50	-5.28	-5.16	-4.07	-8.67
31	2	EOC: EOC: Other PT Losses	-5.53	-2.33	-2.43	-5.12	-5.01	-3.34	-10.26
32	0	EOC: EOC: Other PT Losses	-5.53	-2.33	-2.43	-5.12	-5.01	-3.34	-10.26
32	1	EOC: EOC: Other PT Losses	-5.53	-2.17	-2.28	-5.10	-4.99	-3.23	-10.49
32	2	EOC: EOC: Other PT Losses	-5.53	-2.02	-2.12	-5.07	-4.97	-3.12	-10.73
33	0	EOC: EOC: Other PT Losses	-5.47	-1.95	-2.05	-5.01	-4.91	-3.05	-10.69
33	1	EOC: EOC: Other PT Losses	-5.47	-1.97	-2.07	-5.02	-4.91	-3.07	-10.66
33	2	EOC: EOC: Other PT Losses	-5.47	-1.99	-2.09	-5.02	-4.92	-3.08	-10.63
34	0	EOC: EOC: Other PT Losses	-5.46	-1.78	-1.88	-4.98	-4.88	-2.94	-10.91
34	1	EOC: EOC: Other PT Losses	-5.46	-1.83	-1.93	-4.99	-4.89	-2.97	-10.84
34	2	EOC: EOC: Other PT Losses	-5.46	-1.88	-1.98	-4.99	-4.90	-3.00	-10.77

MEMBER STRESSES

DECK & CANOPY MEMBERS
EOC

(-) compression

			LIVE LOAD ON MAIN SPAN (LL2)						
Member	Station	Result Case	(P/A) @ Centroid (kips/ft²)	Normal Stress @ Point 1 (kips/ft²)	Normal Stress @ Point 2 (kips/ft²)	Normal Stress @ Point 3 (kips/ft²)	Normal Stress @ Point 4 (kips/ft²)	Normal Stress @ Point 5 (kips/ft²)	Normal Stress @ Point 6 (kips/ft²)
35	0	EOC: EOC: Other PT Losses	-5.46	-1.88	-1.98	-4.99	-4.90	-3.00	-10.77
35	1	EOC: EOC: Other PT Losses	-5.46	-2.03	-2.12	-5.01	-4.92	-3.11	-10.55
35	2	EOC: EOC: Other PT Losses	-5.46	-2.18	-2.27	-5.03	-4.94	-3.21	-10.33
36	0	EOC: EOC: Other PT Losses	-5.46	-2.18	-2.27	-5.03	-4.94	-3.21	-10.33
36	1	EOC: EOC: Other PT Losses	-5.46	-2.33	-2.42	-5.05	-4.97	-3.31	-10.10
36	2	EOC: EOC: Other PT Losses	-5.46	-2.48	-2.56	-5.07	-4.99	-3.41	-9.88
37	0	EOC: EOC: Other PT Losses	-5.46	-2.48	-2.56	-5.07	-4.99	-3.41	-9.88
37	1	EOC: EOC: Other PT Losses	-5.46	-2.56	-2.64	-5.08	-5.00	-3.47	-9.77
37	2	EOC: EOC: Other PT Losses	-5.46	-2.63	-2.71	-5.09	-5.02	-3.52	-9.65
38	0	EOC: EOC: Other PT Losses	-4.86	-1.46	-1.54	-4.40	-4.33	-2.52	-9.90
38	1	EOC: EOC: Other PT Losses	-4.86	-1.79	-1.86	-4.45	-4.37	-2.75	-9.41
38	2	EOC: EOC: Other PT Losses	-4.86	-2.11	-2.19	-4.50	-4.42	-2.97	-8.92
39	0	EOC: EOC: Other PT Losses	-4.92	-0.81	-0.88	-4.36	-4.29	-2.08	-11.04
39	1	EOC: EOC: Other PT Losses	-4.92	-0.92	-0.99	-4.38	-4.30	-2.16	-10.88
39	2	EOC: EOC: Other PT Losses	-4.92	-1.03	-1.10	-4.39	-4.32	-2.23	-10.72
40	0	EOC: EOC: Other PT Losses	-4.92	-1.03	-1.10	-4.39	-4.32	-2.23	-10.72
40	1	EOC: EOC: Other PT Losses	-4.92	-1.35	-1.42	-4.44	-4.37	-2.46	-10.23
40	2	EOC: EOC: Other PT Losses	-4.92	-1.67	-1.74	-4.48	-4.42	-2.68	-9.75
41	0	EOC: EOC: Other PT Losses	-4.92	-1.67	-1.74	-4.48	-4.42	-2.68	-9.75
41	1	EOC: EOC: Other PT Losses	-4.92	-2.00	-2.06	-4.53	-4.47	-2.91	-9.26
41	2	EOC: EOC: Other PT Losses	-4.92	-2.33	-2.38	-4.57	-4.52	-3.13	-8.77
42	0	EOC: EOC: Other PT Losses	-4.92	-2.33	-2.38	-4.57	-4.52	-3.13	-8.77
42	1	EOC: EOC: Other PT Losses	-4.92	-2.53	-2.58	-4.60	-4.55	-3.27	-8.47
42	2	EOC: EOC: Other PT Losses	-4.92	-2.73	-2.78	-4.63	-4.58	-3.41	-8.17
43	0	EOC: EOC: Other PT Losses	-3.69	-0.50	-0.56	-3.25	-3.20	-1.49	-8.44
43	1	EOC: EOC: Other PT Losses	-3.69	-1.10	-1.15	-3.34	-3.29	-1.90	-7.55
43	2	EOC: EOC: Other PT Losses	-3.69	-1.69	-1.74	-3.43	-3.38	-2.32	-6.66
44	0	EOC: EOC: Other PT Losses	-3.94	0.66	0.61	-3.30	-3.25	-0.76	-10.82
44	1	EOC: EOC: Other PT Losses	-3.94	0.52	0.47	-3.32	-3.27	-0.85	-10.62
44	2	EOC: EOC: Other PT Losses	-3.94	0.38	0.33	-3.34	-3.29	-0.95	-10.41
45	0	EOC: EOC: Other PT Losses	-3.94	0.38	0.33	-3.34	-3.29	-0.95	-10.41
45	1	EOC: EOC: Other PT Losses	-3.94	-0.01	-0.06	-3.39	-3.35	-1.22	-9.82
45	2	EOC: EOC: Other PT Losses	-3.94	-0.40	-0.44	-3.45	-3.41	-1.49	-9.24
46	0	EOC: EOC: Other PT Losses	-3.94	-0.40	-0.44	-3.45	-3.41	-1.49	-9.24
46	1	EOC: EOC: Other PT Losses	-3.94	-0.79	-0.83	-3.50	-3.47	-1.76	-8.66
46	2	EOC: EOC: Other PT Losses	-3.94	-1.18	-1.21	-3.56	-3.53	-2.03	-8.07
47	0	EOC: EOC: Other PT Losses	-3.94	-1.18	-1.21	-3.56	-3.53	-2.03	-8.07
47	1	EOC: EOC: Other PT Losses	-3.94	-1.46	-1.49	-3.60	-3.57	-2.22	-7.66
47	2	EOC: EOC: Other PT Losses	-3.94	-1.74	-1.76	-3.64	-3.61	-2.42	-7.24
48	0	EOC: EOC: Other PT Losses	-2.19	1.58	1.55	-1.66	-1.63	0.42	-7.83
48	1	EOC: EOC: Other PT Losses	-2.19	0.80	0.77	-1.77	-1.74	-0.12	-6.67
48	2	EOC: EOC: Other PT Losses	-2.19	0.03	0.00	-1.88	-1.85	-0.66	-5.50
49	0	EOC: EOC: Other PT Losses	-2.65	3.11	3.08	-1.82	-1.80	1.35	-11.28
49	1	EOC: EOC: Other PT Losses	-2.65	2.87	2.85	-1.86	-1.83	1.18	-10.93
49	2	EOC: EOC: Other PT Losses	-2.65	2.64	2.61	-1.89	-1.87	1.02	-10.58
50	0	EOC: EOC: Other PT Losses	-2.65	2.64	2.61	-1.89	-1.87	1.02	-10.58
50	1	EOC: EOC: Other PT Losses	-2.65	2.02	2.00	-1.98	-1.96	0.59	-9.66
50	2	EOC: EOC: Other PT Losses	-2.65	1.40	1.39	-2.07	-2.05	0.17	-8.73

MEMBER STRESSES

DECK & CANOPY MEMBERS
EOC

(-) compression

			LIVE LOAD ON MAIN SPAN (LL2)						
Member	Station	Result Case	(P/A) @ Centroid (kips/ft²)	Normal Stress @ Point 1 (kips/ft²)	Normal Stress @ Point 2 (kips/ft²)	Normal Stress @ Point 3 (kips/ft²)	Normal Stress @ Point 4 (kips/ft²)	Normal Stress @ Point 5 (kips/ft²)	Normal Stress @ Point 6 (kips/ft²)
51	0	EOC: EOC: Other PT Losses	-2.65	1.40	1.39	-2.07	-2.05	0.17	-8.73
51	1	EOC: EOC: Other PT Losses	-2.65	0.79	0.77	-2.16	-2.14	-0.26	-7.81
51	2	EOC: EOC: Other PT Losses	-2.65	0.17	0.16	-2.24	-2.23	-0.69	-6.88
52	0	EOC: EOC: Other PT Losses	-2.65	0.17	0.16	-2.24	-2.23	-0.69	-6.88
52	1	EOC: EOC: Other PT Losses	-2.65	-0.32	-0.33	-2.31	-2.31	-1.03	-6.15
52	2	EOC: EOC: Other PT Losses	-2.65	-0.81	-0.81	-2.38	-2.38	-1.37	-5.42
60	0	EOC: EOC: Other PT Losses	0.00	0.00	0.00	0.00	0.00	0.00	0.00
60	1	EOC: EOC: Other PT Losses	0.00	0.00	0.00	0.00	0.00	0.00	0.00
60	2	EOC: EOC: Other PT Losses	0.00	0.00	0.00	0.00	0.00	0.00	0.00
101	0	EOC: EOC: Other PT Losses	0.00	0.00	0.00	0.00	0.00	0.00	0.00
101	1	EOC: EOC: Other PT Losses	0.00	0.00	0.00	0.00	0.00	0.00	0.00
101	2	EOC: EOC: Other PT Losses	0.00	0.00	0.00	0.00	0.00	0.00	0.00
102	0	EOC: EOC: Other PT Losses	0.00	0.00	0.00	0.00	0.00	0.00	0.00
102	1	EOC: EOC: Other PT Losses	0.00	0.00	0.00	0.00	0.00	0.00	0.00
102	2	EOC: EOC: Other PT Losses	0.00	0.00	0.00	0.00	0.00	0.00	0.00
103	0	EOC: EOC: Other PT Losses	0.00	0.00	0.00	0.00	0.00	0.00	0.00
103	1	EOC: EOC: Other PT Losses	0.00	0.00	0.00	0.00	0.00	0.00	0.00
103	2	EOC: EOC: Other PT Losses	0.00	0.00	0.00	0.00	0.00	0.00	0.00
104	0	EOC: EOC: Other PT Losses	0.00	0.00	0.00	0.00	0.00	0.00	0.00
104	1	EOC: EOC: Other PT Losses	0.00	0.00	0.00	0.00	0.00	0.00	0.00
104	2	EOC: EOC: Other PT Losses	0.00	0.00	0.00	0.00	0.00	0.00	0.00
106	0	EOC: EOC: Other PT Losses	-16.75	5.99	5.99	-41.71	-41.71	0.92	-21.43
106	1	EOC: EOC: Other PT Losses	-16.75	4.43	4.43	-40.01	-40.00	-0.29	-21.11
106	2	EOC: EOC: Other PT Losses	-16.75	2.88	2.87	-38.30	-38.29	-1.50	-20.79
107	0	EOC: EOC: Other PT Losses	-16.75	2.88	2.87	-38.30	-38.29	-1.50	-20.79
107	1	EOC: EOC: Other PT Losses	-16.75	-6.42	-6.43	-28.09	-28.08	-8.73	-18.87
107	2	EOC: EOC: Other PT Losses	-16.75	-15.73	-15.73	-17.87	-17.87	-15.96	-16.96
108	0	EOC: EOC: Other PT Losses	-16.75	-15.73	-15.73	-17.87	-17.87	-15.96	-16.96
108	1	EOC: EOC: Other PT Losses	-16.75	-24.54	-24.55	-8.20	-8.19	-22.81	-15.15
108	2	EOC: EOC: Other PT Losses	-16.75	-33.35	-33.36	1.48	1.49	-29.66	-13.33
109	0	EOC: EOC: Other PT Losses	-16.75	-33.35	-33.36	1.48	1.49	-29.66	-13.33
109	1	EOC: EOC: Other PT Losses	-16.75	-36.56	-36.57	5.00	5.01	-32.15	-12.67
109	2	EOC: EOC: Other PT Losses	-16.75	-39.77	-39.78	8.52	8.54	-34.64	-12.01
111	0	EOC: EOC: Other PT Losses	-23.30	-32.58	-32.60	-13.11	-13.10	-30.52	-21.39
111	1	EOC: EOC: Other PT Losses	-23.30	-32.17	-32.18	-13.57	-13.55	-30.20	-21.48
111	2	EOC: EOC: Other PT Losses	-23.30	-31.75	-31.77	-14.03	-14.01	-29.87	-21.56
112	0	EOC: EOC: Other PT Losses	-23.30	-31.75	-31.77	-14.03	-14.01	-29.87	-21.56
112	1	EOC: EOC: Other PT Losses	-23.30	-30.06	-30.08	-15.88	-15.86	-28.56	-21.91
112	2	EOC: EOC: Other PT Losses	-23.30	-28.37	-28.40	-17.73	-17.71	-27.25	-22.26
113	0	EOC: EOC: Other PT Losses	-23.30	-28.37	-28.40	-17.73	-17.71	-27.25	-22.26
113	1	EOC: EOC: Other PT Losses	-23.30	-26.51	-26.53	-19.78	-19.76	-25.80	-22.64
113	2	EOC: EOC: Other PT Losses	-23.30	-24.64	-24.67	-21.83	-21.80	-24.35	-23.02
114	0	EOC: EOC: Other PT Losses	-23.30	-24.64	-24.67	-21.83	-21.80	-24.35	-23.02
114	1	EOC: EOC: Other PT Losses	-23.30	-24.24	-24.27	-22.27	-22.24	-24.04	-23.11
114	2	EOC: EOC: Other PT Losses	-23.30	-23.84	-23.87	-22.71	-22.68	-23.73	-23.19
116	0	EOC: EOC: Other PT Losses	-22.65	-31.59	-31.62	-12.83	-12.81	-29.61	-20.81
116	1	EOC: EOC: Other PT Losses	-22.65	-31.05	-31.08	-13.42	-13.40	-29.19	-20.92
116	2	EOC: EOC: Other PT Losses	-22.65	-30.51	-30.55	-14.01	-13.98	-28.77	-21.03

MEMBER STRESSES

DECK & CANOPY MEMBERS
EOC

(-) compression

			LIVE LOAD ON MAIN SPAN (LL2)						
Member	Station	Result Case	(P/A) @ Centroid (kips/ft²)	Normal Stress @ Point 1 (kips/ft²)	Normal Stress @ Point 2 (kips/ft²)	Normal Stress @ Point 3 (kips/ft²)	Normal Stress @ Point 4 (kips/ft²)	Normal Stress @ Point 5 (kips/ft²)	Normal Stress @ Point 6 (kips/ft²)
117	0	EOC: EOC: Other PT Losses	-22.65	-30.51	-30.55	-14.01	-13.98	-28.77	-21.03
117	1	EOC: EOC: Other PT Losses	-22.65	-27.49	-27.52	-17.34	-17.31	-26.42	-21.65
117	2	EOC: EOC: Other PT Losses	-22.65	-24.46	-24.50	-20.66	-20.63	-24.07	-22.27
118	0	EOC: EOC: Other PT Losses	-22.65	-24.46	-24.50	-20.66	-20.63	-24.07	-22.27
118	1	EOC: EOC: Other PT Losses	-22.65	-21.32	-21.36	-24.11	-24.07	-21.63	-22.92
118	2	EOC: EOC: Other PT Losses	-22.65	-18.17	-18.22	-27.56	-27.52	-19.19	-23.57
119	0	EOC: EOC: Other PT Losses	-22.65	-18.17	-18.22	-27.56	-27.52	-19.19	-23.57
119	1	EOC: EOC: Other PT Losses	-22.65	-17.61	-17.65	-28.18	-28.14	-18.75	-23.68
119	2	EOC: EOC: Other PT Losses	-22.65	-17.04	-17.09	-28.80	-28.76	-18.31	-23.80
121	0	EOC: EOC: Other PT Losses	-13.62	-22.10	-22.15	-4.31	-4.27	-20.23	-11.88
121	1	EOC: EOC: Other PT Losses	-13.62	-21.67	-21.72	-4.79	-4.75	-19.89	-11.96
121	2	EOC: EOC: Other PT Losses	-13.62	-21.23	-21.28	-5.27	-5.22	-19.56	-12.05
122	0	EOC: EOC: Other PT Losses	-13.62	-21.23	-21.28	-5.27	-5.22	-19.56	-12.05
122	1	EOC: EOC: Other PT Losses	-13.62	-17.93	-17.98	-8.90	-8.85	-16.99	-12.73
122	2	EOC: EOC: Other PT Losses	-13.62	-14.62	-14.67	-12.53	-12.48	-14.42	-13.42
123	0	EOC: EOC: Other PT Losses	-13.62	-14.62	-14.67	-12.53	-12.48	-14.42	-13.42
123	1	EOC: EOC: Other PT Losses	-13.62	-11.31	-11.36	-16.16	-16.11	-11.85	-14.10
123	2	EOC: EOC: Other PT Losses	-13.62	-8.00	-8.06	-19.80	-19.74	-9.27	-14.78
124	0	EOC: EOC: Other PT Losses	-13.62	-8.00	-8.06	-19.80	-19.74	-9.27	-14.78
124	1	EOC: EOC: Other PT Losses	-13.62	-7.62	-7.68	-20.21	-20.16	-8.98	-14.86
124	2	EOC: EOC: Other PT Losses	-13.62	-7.24	-7.30	-20.63	-20.58	-8.68	-14.93
126	0	EOC: EOC: Other PT Losses	2.02	-13.49	-13.55	19.06	19.11	-10.05	5.22
126	1	EOC: EOC: Other PT Losses	2.02	-11.79	-11.85	17.19	17.25	-8.74	4.87
126	2	EOC: EOC: Other PT Losses	2.02	-10.09	-10.15	15.33	15.38	-7.42	4.52
127	0	EOC: EOC: Other PT Losses	2.02	-10.09	-10.15	15.33	15.38	-7.42	4.52
127	1	EOC: EOC: Other PT Losses	2.02	-3.77	-3.84	8.39	8.45	-2.51	3.22
127	2	EOC: EOC: Other PT Losses	2.02	2.54	2.48	1.46	1.51	2.40	1.92
128	0	EOC: EOC: Other PT Losses	2.02	2.54	2.48	1.46	1.51	2.40	1.92
128	1	EOC: EOC: Other PT Losses	2.02	8.94	8.87	-5.57	-5.51	7.37	0.60
133	0	EOC: EOC: Other PT Losses	5.53	4.88	4.81	6.26	6.31	5.00	5.67
133	1	EOC: EOC: Other PT Losses	5.53	6.05	5.99	4.97	5.02	5.91	5.43
133	2	EOC: EOC: Other PT Losses	5.53	7.22	7.17	3.68	3.73	6.82	5.19
134	0	EOC: EOC: Other PT Losses	5.53	7.22	7.17	3.68	3.73	6.82	5.19
134	1	EOC: EOC: Other PT Losses	5.53	8.35	8.30	2.44	2.49	7.71	4.96
134	2	EOC: EOC: Other PT Losses	5.53	9.48	9.44	1.20	1.24	8.59	4.72
135	0	EOC: EOC: Other PT Losses	5.53	9.48	9.44	1.20	1.24	8.59	4.72
135	1	EOC: EOC: Other PT Losses	5.53	9.83	9.78	0.82	0.86	8.85	4.65
135	2	EOC: EOC: Other PT Losses	5.53	10.17	10.12	0.45	0.49	9.12	4.58
137	0	EOC: EOC: Other PT Losses	9.08	11.30	11.26	6.65	6.69	10.79	8.63
137	1	EOC: EOC: Other PT Losses	9.08	11.39	11.34	6.56	6.60	10.86	8.61
137	2	EOC: EOC: Other PT Losses	9.08	11.47	11.43	6.47	6.50	10.92	8.60
138	0	EOC: EOC: Other PT Losses	9.08	11.47	11.43	6.47	6.50	10.92	8.60
138	1	EOC: EOC: Other PT Losses	9.08	11.64	11.60	6.28	6.32	11.05	8.56
138	2	EOC: EOC: Other PT Losses	9.08	11.80	11.76	6.10	6.13	11.18	8.53
139	0	EOC: EOC: Other PT Losses	9.08	11.80	11.76	6.10	6.13	11.18	8.53
139	1	EOC: EOC: Other PT Losses	9.08	12.07	12.03	5.81	5.84	11.39	8.47
139	2	EOC: EOC: Other PT Losses	9.08	12.34	12.30	5.52	5.55	11.60	8.42

MEMBER STRESSES

DECK & CANOPY MEMBERS
EOC

(-) compression

			LIVE LOAD ON MAIN SPAN (LL2)						
Member	Station	Result Case	(P/A) @ Centroid (kips/ft²)	Normal Stress @ Point 1 (kips/ft²)	Normal Stress @ Point 2 (kips/ft²)	Normal Stress @ Point 3 (kips/ft²)	Normal Stress @ Point 4 (kips/ft²)	Normal Stress @ Point 5 (kips/ft²)	Normal Stress @ Point 6 (kips/ft²)
140	0	EOC: EOC: Other PT Losses	9.08	12.34	12.30	5.52	5.55	11.60	8.42
140	1	EOC: EOC: Other PT Losses	9.08	12.32	12.29	5.53	5.56	11.59	8.42
140	2	EOC: EOC: Other PT Losses	9.08	12.31	12.28	5.54	5.57	11.58	8.42
142	0	EOC: EOC: Other PT Losses	9.11	17.03	17.00	0.41	0.44	15.25	7.48
142	1	EOC: EOC: Other PT Losses	9.11	16.29	16.25	1.23	1.26	14.67	7.63
142	2	EOC: EOC: Other PT Losses	9.11	15.54	15.51	2.04	2.07	14.10	7.78
143	0	EOC: EOC: Other PT Losses	9.11	15.54	15.51	2.04	2.07	14.10	7.78
143	1	EOC: EOC: Other PT Losses	9.11	13.96	13.93	3.78	3.81	12.87	8.11
143	2	EOC: EOC: Other PT Losses	9.11	12.37	12.35	5.52	5.55	11.64	8.44
144	0	EOC: EOC: Other PT Losses	9.11	12.37	12.35	5.52	5.55	11.64	8.44
144	1	EOC: EOC: Other PT Losses	9.11	10.75	10.73	7.30	7.33	10.38	8.77
144	2	EOC: EOC: Other PT Losses	9.11	9.13	9.11	9.08	9.10	9.12	9.10
145	0	EOC: EOC: Other PT Losses	9.11	9.13	9.11	9.08	9.10	9.12	9.10
145	1	EOC: EOC: Other PT Losses	9.11	8.60	8.57	9.66	9.69	8.70	9.21
145	2	EOC: EOC: Other PT Losses	9.11	8.07	8.04	10.25	10.27	8.29	9.32
147	0	EOC: EOC: Other PT Losses	7.58	21.03	21.01	-7.19	-7.17	18.02	4.81
147	1	EOC: EOC: Other PT Losses	7.58	19.28	19.26	-5.27	-5.25	16.67	5.17
147	2	EOC: EOC: Other PT Losses	7.58	17.54	17.51	-3.35	-3.33	15.31	5.53
148	0	EOC: EOC: Other PT Losses	7.58	17.54	17.51	-3.35	-3.33	15.31	5.53
148	1	EOC: EOC: Other PT Losses	7.58	14.34	14.32	0.15	0.17	12.83	6.19
148	2	EOC: EOC: Other PT Losses	7.58	11.15	11.13	3.66	3.67	10.35	6.84
149	0	EOC: EOC: Other PT Losses	7.58	11.15	11.13	3.66	3.67	10.35	6.84
149	1	EOC: EOC: Other PT Losses	7.58	7.77	7.75	7.37	7.38	7.72	7.54
149	2	EOC: EOC: Other PT Losses	7.58	4.39	4.37	11.08	11.09	5.09	8.24
150	0	EOC: EOC: Other PT Losses	7.58	4.39	4.37	11.08	11.09	5.09	8.23
150	1	EOC: EOC: Other PT Losses	7.58	3.33	3.32	12.24	12.25	4.27	8.45
150	2	EOC: EOC: Other PT Losses	7.58	2.28	2.26	13.39	13.41	3.45	8.67
152	0	EOC: EOC: Other PT Losses	4.89	25.09	25.07	-17.29	-17.28	20.58	0.73
152	1	EOC: EOC: Other PT Losses	4.89	21.21	21.20	-13.04	-13.02	17.57	1.53
152	2	EOC: EOC: Other PT Losses	4.89	17.33	17.32	-8.78	-8.76	14.55	2.33
153	0	EOC: EOC: Other PT Losses	4.89	17.33	17.32	-8.78	-8.77	14.55	2.32
153	1	EOC: EOC: Other PT Losses	4.89	11.00	10.98	-1.82	-1.81	9.63	3.63
153	2	EOC: EOC: Other PT Losses	4.89	4.66	4.65	5.13	5.15	4.71	4.93
154	0	EOC: EOC: Other PT Losses	4.89	4.66	4.65	5.13	5.15	4.71	4.93
154	1	EOC: EOC: Other PT Losses	4.89	-2.22	-2.23	12.69	12.70	-0.64	6.35
154	2	EOC: EOC: Other PT Losses	4.89	-9.10	-9.11	20.24	20.25	-5.99	7.77
155	0	EOC: EOC: Other PT Losses	4.88	-9.10	-9.11	20.24	20.25	-5.99	7.76
155	1	EOC: EOC: Other PT Losses	4.88	-11.25	-11.26	22.60	22.61	-7.66	8.21
155	2	EOC: EOC: Other PT Losses	4.88	-13.40	-13.41	24.96	24.97	-9.33	8.65
157	0	EOC: EOC: Other PT Losses	0.76	11.51	11.50	-11.03	-11.03	9.11	-1.45
157	1	EOC: EOC: Other PT Losses	0.76	9.67	9.66	-9.02	-9.01	7.68	-1.07
157	2	EOC: EOC: Other PT Losses	0.76	7.84	7.83	-7.00	-6.99	6.26	-0.69
158	0	EOC: EOC: Other PT Losses	0.76	7.84	7.83	-7.00	-6.99	6.26	-0.69
158	1	EOC: EOC: Other PT Losses	0.76	1.95	1.94	-0.54	-0.53	1.68	0.52
158	2	EOC: EOC: Other PT Losses	0.76	-3.94	-3.94	5.92	5.93	-2.89	1.73
159	0	EOC: EOC: Other PT Losses	0.76	-3.94	-3.94	5.92	5.93	-2.89	1.73
159	1	EOC: EOC: Other PT Losses	0.76	-9.90	-9.90	12.47	12.47	-7.53	2.96
159	2	EOC: EOC: Other PT Losses	0.76	-15.87	-15.87	19.02	19.02	-12.16	4.19

MEMBER STRESSES

DECK & CANOPY MEMBERS
EOC

(-) compression

			LIVE LOAD ON BACK SPAN (LL3)						
Member	Station	Result Case	(P/A) @ Centroid (kips/ft²)	Normal Stress @ Point 1 (kips/ft²)	Normal Stress @ Point 2 (kips/ft²)	Normal Stress @ Point 3 (kips/ft²)	Normal Stress @ Point 4 (kips/ft²)	Normal Stress @ Point 5 (kips/ft²)	Normal Stress @ Point 6 (kips/ft²)
1	0	EOC: EOC: Other PT Losses	0.00	0.00	0.00	0.00	0.00	0.00	0.00
1	1	EOC: EOC: Other PT Losses	0.00	0.00	0.00	0.00	0.00	0.00	0.00
1	2	EOC: EOC: Other PT Losses	0.00	0.00	0.00	0.00	0.00	0.00	0.00
2	0	EOC: EOC: Other PT Losses	0.03	-0.26	-0.26	-0.02	-0.01	-0.17	0.46
2	1	EOC: EOC: Other PT Losses	0.03	0.42	0.42	0.08	0.08	0.30	-0.56
2	2	EOC: EOC: Other PT Losses	0.03	1.09	1.09	0.18	0.18	0.77	-1.58
3	0	EOC: EOC: Other PT Losses	-1.01	-0.30	-0.30	-0.90	-0.90	-0.52	-2.06
3	1	EOC: EOC: Other PT Losses	-1.01	-0.34	-0.34	-0.91	-0.91	-0.54	-2.01
3	2	EOC: EOC: Other PT Losses	-1.01	-0.38	-0.37	-0.91	-0.92	-0.57	-1.95
4	0	EOC: EOC: Other PT Losses	-1.01	-0.38	-0.37	-0.91	-0.92	-0.57	-1.95
4	1	EOC: EOC: Other PT Losses	-1.01	-0.46	-0.45	-0.92	-0.93	-0.62	-1.83
4	2	EOC: EOC: Other PT Losses	-1.01	-0.54	-0.53	-0.93	-0.95	-0.68	-1.72
5	0	EOC: EOC: Other PT Losses	-1.01	-0.54	-0.53	-0.93	-0.95	-0.68	-1.72
5	1	EOC: EOC: Other PT Losses	-1.01	-0.62	-0.60	-0.94	-0.96	-0.73	-1.60
5	2	EOC: EOC: Other PT Losses	-1.01	-0.70	-0.68	-0.95	-0.97	-0.79	-1.48
6	0	EOC: EOC: Other PT Losses	-1.01	-0.70	-0.68	-0.95	-0.97	-0.79	-1.48
6	1	EOC: EOC: Other PT Losses	-1.01	-0.72	-0.69	-0.95	-0.97	-0.80	-1.46
6	2	EOC: EOC: Other PT Losses	-1.01	-0.73	-0.70	-0.95	-0.98	-0.80	-1.45
7	0	EOC: EOC: Other PT Losses	-0.92	-1.37	-1.34	-0.97	-1.00	-1.22	-0.28
7	1	EOC: EOC: Other PT Losses	-0.92	-1.00	-0.97	-0.92	-0.95	-0.97	-0.83
7	2	EOC: EOC: Other PT Losses	-0.92	-0.63	-0.60	-0.87	-0.89	-0.71	-1.39
8	0	EOC: EOC: Other PT Losses	-1.56	-1.35	-1.33	-1.51	-1.54	-1.41	-1.89
8	1	EOC: EOC: Other PT Losses	-1.56	-1.30	-1.28	-1.51	-1.53	-1.37	-1.97
8	2	EOC: EOC: Other PT Losses	-1.56	-1.26	-1.23	-1.50	-1.53	-1.34	-2.04
9	0	EOC: EOC: Other PT Losses	-1.56	-1.26	-1.23	-1.50	-1.53	-1.34	-2.04
9	1	EOC: EOC: Other PT Losses	-1.56	-1.13	-1.10	-1.48	-1.51	-1.25	-2.23
9	2	EOC: EOC: Other PT Losses	-1.56	-1.01	-0.97	-1.46	-1.50	-1.16	-2.42
10	0	EOC: EOC: Other PT Losses	-1.56	-1.01	-0.97	-1.46	-1.50	-1.16	-2.42
10	1	EOC: EOC: Other PT Losses	-1.56	-0.89	-0.84	-1.44	-1.48	-1.08	-2.61
10	2	EOC: EOC: Other PT Losses	-1.56	-0.76	-0.71	-1.42	-1.46	-0.99	-2.80
11	0	EOC: EOC: Other PT Losses	-1.56	-0.76	-0.71	-1.42	-1.46	-0.99	-2.80
11	1	EOC: EOC: Other PT Losses	-1.56	-0.75	-0.70	-1.41	-1.46	-0.98	-2.82
11	2	EOC: EOC: Other PT Losses	-1.56	-0.73	-0.68	-1.41	-1.46	-0.96	-2.85
12	0	EOC: EOC: Other PT Losses	-1.57	-1.28	-1.23	-1.50	-1.55	-1.35	-2.06
12	1	EOC: EOC: Other PT Losses	-1.57	-1.04	-0.99	-1.47	-1.52	-1.19	-2.41
12	2	EOC: EOC: Other PT Losses	-1.57	-0.81	-0.76	-1.43	-1.48	-1.02	-2.77
13	0	EOC: EOC: Other PT Losses	-1.94	-1.25	-1.20	-1.81	-1.86	-1.44	-3.01
13	1	EOC: EOC: Other PT Losses	-1.94	-1.26	-1.21	-1.81	-1.86	-1.45	-2.99
13	2	EOC: EOC: Other PT Losses	-1.94	-1.27	-1.21	-1.81	-1.86	-1.45	-2.98
14	0	EOC: EOC: Other PT Losses	-1.94	-1.27	-1.21	-1.81	-1.86	-1.45	-2.98
14	1	EOC: EOC: Other PT Losses	-1.94	-1.30	-1.24	-1.81	-1.87	-1.47	-2.94
14	2	EOC: EOC: Other PT Losses	-1.94	-1.33	-1.27	-1.81	-1.87	-1.49	-2.89
15	0	EOC: EOC: Other PT Losses	-1.94	-1.33	-1.27	-1.81	-1.87	-1.49	-2.89
15	1	EOC: EOC: Other PT Losses	-1.94	-1.36	-1.29	-1.81	-1.88	-1.51	-2.85
15	2	EOC: EOC: Other PT Losses	-1.94	-1.39	-1.32	-1.81	-1.89	-1.53	-2.81
16	0	EOC: EOC: Other PT Losses	-1.94	-1.39	-1.32	-1.81	-1.89	-1.53	-2.81
16	1	EOC: EOC: Other PT Losses	-1.94	-1.39	-1.32	-1.81	-1.89	-1.53	-2.81
16	2	EOC: EOC: Other PT Losses	-1.94	-1.40	-1.32	-1.81	-1.89	-1.53	-2.80

MEMBER STRESSES

DECK & CANOPY MEMBERS
EOC

(-) compression

			LIVE LOAD ON BACK SPAN (LL3)						
Member	Station	Result Case	(P/A) @ Centroid (kips/ft²)	Normal Stress @ Point 1 (kips/ft²)	Normal Stress @ Point 2 (kips/ft²)	Normal Stress @ Point 3 (kips/ft²)	Normal Stress @ Point 4 (kips/ft²)	Normal Stress @ Point 5 (kips/ft²)	Normal Stress @ Point 6 (kips/ft²)
17	0	EOC: EOC: Other PT Losses	-1.96	-1.52	-1.44	-1.85	-1.93	-1.63	-2.68
17	1	EOC: EOC: Other PT Losses	-1.96	-1.46	-1.38	-1.84	-1.92	-1.58	-2.77
17	2	EOC: EOC: Other PT Losses	-1.96	-1.40	-1.32	-1.83	-1.91	-1.54	-2.86
18	0	EOC: EOC: Other PT Losses	-2.03	-1.54	-1.46	-1.92	-1.99	-1.66	-2.83
18	1	EOC: EOC: Other PT Losses	-2.03	-1.53	-1.46	-1.91	-1.99	-1.66	-2.84
18	2	EOC: EOC: Other PT Losses	-2.03	-1.53	-1.45	-1.91	-1.99	-1.65	-2.85
19	0	EOC: EOC: Other PT Losses	-2.03	-1.53	-1.45	-1.91	-1.99	-1.65	-2.85
19	1	EOC: EOC: Other PT Losses	-2.03	-1.50	-1.42	-1.91	-1.99	-1.64	-2.88
19	2	EOC: EOC: Other PT Losses	-2.03	-1.48	-1.39	-1.90	-1.99	-1.62	-2.92
20	0	EOC: EOC: Other PT Losses	-2.03	-1.48	-1.39	-1.90	-1.99	-1.62	-2.92
20	1	EOC: EOC: Other PT Losses	-2.03	-1.46	-1.36	-1.89	-1.99	-1.60	-2.96
20	2	EOC: EOC: Other PT Losses	-2.03	-1.43	-1.34	-1.89	-1.99	-1.58	-3.00
21	0	EOC: EOC: Other PT Losses	-2.03	-1.43	-1.34	-1.89	-1.99	-1.58	-3.00
21	1	EOC: EOC: Other PT Losses	-2.03	-1.43	-1.33	-1.89	-1.98	-1.58	-3.01
21	2	EOC: EOC: Other PT Losses	-2.03	-1.42	-1.32	-1.88	-1.98	-1.57	-3.02
22	0	EOC: EOC: Other PT Losses	-1.90	-1.22	-1.12	-1.75	-1.85	-1.40	-3.00
22	1	EOC: EOC: Other PT Losses	-1.90	-1.38	-1.28	-1.77	-1.87	-1.50	-2.76
22	2	EOC: EOC: Other PT Losses	-1.90	-1.54	-1.44	-1.79	-1.89	-1.61	-2.53
23	0	EOC: EOC: Other PT Losses	-1.79	-1.31	-1.21	-1.66	-1.76	-1.42	-2.58
23	1	EOC: EOC: Other PT Losses	-1.79	-1.33	-1.23	-1.66	-1.77	-1.43	-2.56
23	2	EOC: EOC: Other PT Losses	-1.79	-1.34	-1.24	-1.67	-1.77	-1.44	-2.54
24	0	EOC: EOC: Other PT Losses	-1.79	-1.34	-1.24	-1.67	-1.77	-1.44	-2.54
24	1	EOC: EOC: Other PT Losses	-1.79	-1.43	-1.32	-1.68	-1.78	-1.50	-2.41
24	2	EOC: EOC: Other PT Losses	-1.79	-1.52	-1.41	-1.69	-1.80	-1.56	-2.28
25	0	EOC: EOC: Other PT Losses	-1.79	-1.52	-1.41	-1.69	-1.80	-1.56	-2.28
25	1	EOC: EOC: Other PT Losses	-1.79	-1.61	-1.49	-1.70	-1.82	-1.63	-2.15
25	2	EOC: EOC: Other PT Losses	-1.79	-1.70	-1.58	-1.71	-1.83	-1.69	-2.01
26	0	EOC: EOC: Other PT Losses	-1.79	-1.70	-1.58	-1.71	-1.83	-1.69	-2.01
26	1	EOC: EOC: Other PT Losses	-1.79	-1.73	-1.60	-1.71	-1.83	-1.70	-1.98
26	2	EOC: EOC: Other PT Losses	-1.79	-1.75	-1.62	-1.71	-1.84	-1.72	-1.95
29	0	EOC: EOC: Other PT Losses	0.72	24.90	25.07	4.36	4.19	17.61	-35.75
29	1	EOC: EOC: Other PT Losses	0.73	17.15	17.31	3.22	3.06	12.21	-24.09
29	2	EOC: EOC: Other PT Losses	0.73	10.22	10.38	2.21	2.05	7.39	-13.67
30	0	EOC: EOC: Other PT Losses	0.73	10.22	10.38	2.21	2.05	7.39	-13.67
30	1	EOC: EOC: Other PT Losses	0.73	-8.78	-8.63	-0.57	-0.72	-5.83	14.91
30	2	EOC: EOC: Other PT Losses	0.74	-15.35	-15.22	-1.54	-1.67	-10.42	24.82
31	0	EOC: EOC: Other PT Losses	0.74	-15.35	-15.22	-1.54	-1.67	-10.42	24.82
31	1	EOC: EOC: Other PT Losses	0.74	-9.51	-9.39	-0.69	-0.81	-6.35	16.06
31	2	EOC: EOC: Other PT Losses	0.74	8.75	8.86	1.98	1.87	6.36	-11.37
32	0	EOC: EOC: Other PT Losses	0.74	8.75	8.86	1.98	1.87	6.36	-11.37
32	1	EOC: EOC: Other PT Losses	0.75	12.48	12.58	2.52	2.42	8.95	-16.97
32	2	EOC: EOC: Other PT Losses	0.75	16.47	16.57	3.10	3.00	11.72	-22.96
33	0	EOC: EOC: Other PT Losses	1.78	16.39	16.50	3.97	3.87	11.99	-20.27
33	1	EOC: EOC: Other PT Losses	1.78	16.24	16.35	3.95	3.85	11.88	-20.05
33	2	EOC: EOC: Other PT Losses	1.78	16.10	16.20	3.93	3.83	11.78	-19.83
34	0	EOC: EOC: Other PT Losses	1.77	15.31	15.41	3.81	3.71	11.23	-18.66
34	1	EOC: EOC: Other PT Losses	1.77	13.36	13.47	3.53	3.42	9.88	-15.73
34	2	EOC: EOC: Other PT Losses	1.77	11.56	11.66	3.26	3.16	8.62	-13.01

MEMBER STRESSES

DECK & CANOPY MEMBERS
EOC

(-) compression

			LIVE LOAD ON BACK SPAN (LL3)						
Member	Station	Result Case	(P/A) @ Centroid (kips/ft²)	Normal Stress @ Point 1 (kips/ft²)	Normal Stress @ Point 2 (kips/ft²)	Normal Stress @ Point 3 (kips/ft²)	Normal Stress @ Point 4 (kips/ft²)	Normal Stress @ Point 5 (kips/ft²)	Normal Stress @ Point 6 (kips/ft²)
35	0	EOC: EOC: Other PT Losses	1.77	11.56	11.66	3.26	3.16	8.62	-13.01
35	1	EOC: EOC: Other PT Losses	1.78	6.84	6.93	2.57	2.47	5.33	-5.91
35	2	EOC: EOC: Other PT Losses	1.78	3.43	3.52	2.07	1.98	2.96	-0.78
36	0	EOC: EOC: Other PT Losses	1.78	3.43	3.52	2.07	1.98	2.96	-0.78
36	1	EOC: EOC: Other PT Losses	1.78	1.34	1.42	1.76	1.68	1.50	2.37
36	2	EOC: EOC: Other PT Losses	1.78	0.56	0.64	1.65	1.57	0.96	3.55
37	0	EOC: EOC: Other PT Losses	1.78	0.56	0.64	1.65	1.57	0.96	3.55
37	1	EOC: EOC: Other PT Losses	1.78	0.68	0.76	1.67	1.59	1.04	3.38
37	2	EOC: EOC: Other PT Losses	1.78	1.15	1.22	1.73	1.66	1.37	2.68
38	0	EOC: EOC: Other PT Losses	1.87	1.40	1.48	1.84	1.77	1.57	2.50
38	1	EOC: EOC: Other PT Losses	1.87	1.44	1.52	1.85	1.77	1.60	2.45
38	2	EOC: EOC: Other PT Losses	1.87	1.48	1.55	1.85	1.78	1.62	2.39
39	0	EOC: EOC: Other PT Losses	1.95	1.54	1.61	1.94	1.86	1.69	2.52
39	1	EOC: EOC: Other PT Losses	1.95	0.57	0.64	1.79	1.72	1.01	3.98
39	2	EOC: EOC: Other PT Losses	1.95	-0.28	-0.21	1.67	1.60	0.43	5.26
40	0	EOC: EOC: Other PT Losses	1.95	-0.28	-0.21	1.67	1.60	0.43	5.26
40	1	EOC: EOC: Other PT Losses	1.96	-2.07	-2.00	1.41	1.34	-0.82	7.96
40	2	EOC: EOC: Other PT Losses	1.96	-2.78	-2.71	1.30	1.24	-1.31	9.02
41	0	EOC: EOC: Other PT Losses	1.96	-2.78	-2.71	1.30	1.24	-1.31	9.02
41	1	EOC: EOC: Other PT Losses	1.96	-2.39	-2.33	1.36	1.30	-1.05	8.45
41	2	EOC: EOC: Other PT Losses	1.96	-0.91	-0.85	1.57	1.51	-0.02	6.23
42	0	EOC: EOC: Other PT Losses	1.96	-0.91	-0.85	1.57	1.51	-0.02	6.23
42	1	EOC: EOC: Other PT Losses	1.96	0.55	0.61	1.79	1.73	1.00	4.04
42	2	EOC: EOC: Other PT Losses	1.96	2.43	2.48	2.06	2.01	2.31	1.21
43	0	EOC: EOC: Other PT Losses	1.74	1.66	1.71	1.76	1.71	1.70	1.83
43	1	EOC: EOC: Other PT Losses	1.74	1.98	2.03	1.81	1.76	1.92	1.35
43	2	EOC: EOC: Other PT Losses	1.74	2.30	2.35	1.85	1.80	2.15	0.87
44	0	EOC: EOC: Other PT Losses	2.03	1.35	1.40	1.96	1.91	1.57	3.01
44	1	EOC: EOC: Other PT Losses	2.03	0.33	0.38	1.81	1.76	0.86	4.55
44	2	EOC: EOC: Other PT Losses	2.03	-0.58	-0.53	1.68	1.63	0.23	5.91
45	0	EOC: EOC: Other PT Losses	2.03	-0.58	-0.53	1.68	1.63	0.23	5.91
45	1	EOC: EOC: Other PT Losses	2.03	-2.48	-2.43	1.40	1.35	-1.09	8.77
45	2	EOC: EOC: Other PT Losses	2.03	-3.43	-3.39	1.26	1.22	-1.75	10.21
46	0	EOC: EOC: Other PT Losses	2.03	-3.43	-3.39	1.26	1.22	-1.75	10.21
46	1	EOC: EOC: Other PT Losses	2.03	-3.44	-3.40	1.26	1.22	-1.76	10.24
46	2	EOC: EOC: Other PT Losses	2.04	-2.51	-2.48	1.39	1.36	-1.12	8.85
47	0	EOC: EOC: Other PT Losses	2.04	-2.51	-2.48	1.39	1.36	-1.12	8.85
47	1	EOC: EOC: Other PT Losses	2.04	-1.28	-1.25	1.57	1.54	-0.26	7.00
47	2	EOC: EOC: Other PT Losses	2.04	0.43	0.45	1.82	1.79	0.93	4.44
48	0	EOC: EOC: Other PT Losses	1.14	-1.63	-1.60	0.75	0.73	-0.78	5.29
48	1	EOC: EOC: Other PT Losses	1.14	-1.06	-1.04	0.84	0.81	-0.38	4.44
48	2	EOC: EOC: Other PT Losses	1.14	-0.49	-0.46	0.92	0.89	0.02	3.58
49	0	EOC: EOC: Other PT Losses	1.52	-2.58	-2.55	0.93	0.91	-1.32	7.65
49	1	EOC: EOC: Other PT Losses	1.52	-2.48	-2.45	0.95	0.92	-1.25	7.50
49	2	EOC: EOC: Other PT Losses	1.52	-2.26	-2.23	0.98	0.96	-1.10	7.17
50	0	EOC: EOC: Other PT Losses	1.52	-2.26	-2.23	0.98	0.96	-1.10	7.17
50	1	EOC: EOC: Other PT Losses	1.52	-1.09	-1.07	1.15	1.13	-0.29	5.43
50	2	EOC: EOC: Other PT Losses	1.52	0.90	0.92	1.44	1.42	1.10	2.43

MEMBER STRESSES

DECK & CANOPY MEMBERS
EOC

(-) compression

			LIVE LOAD ON BACK SPAN (LL3)						
Member	Station	Result Case	(P/A) @ Centroid (kips/ft²)	Normal Stress @ Point 1 (kips/ft²)	Normal Stress @ Point 2 (kips/ft²)	Normal Stress @ Point 3 (kips/ft²)	Normal Stress @ Point 4 (kips/ft²)	Normal Stress @ Point 5 (kips/ft²)	Normal Stress @ Point 6 (kips/ft²)
51	0	EOC: EOC: Other PT Losses	1.52	0.90	0.92	1.44	1.42	1.10	2.43
51	1	EOC: EOC: Other PT Losses	1.52	3.74	3.75	1.85	1.84	3.07	-1.82
51	2	EOC: EOC: Other PT Losses	1.52	7.41	7.42	2.39	2.38	5.62	-7.34
52	0	EOC: EOC: Other PT Losses	1.52	7.41	7.42	2.39	2.38	5.62	-7.34
52	1	EOC: EOC: Other PT Losses	1.52	10.92	10.93	2.90	2.89	8.07	-12.61
52	2	EOC: EOC: Other PT Losses	1.52	14.96	14.96	3.49	3.49	10.88	-18.67
60	0	EOC: EOC: Other PT Losses	0.00	0.00	0.00	0.00	0.00	0.00	0.00
60	1	EOC: EOC: Other PT Losses	0.00	0.00	0.00	0.00	0.00	0.00	0.00
60	2	EOC: EOC: Other PT Losses	0.00	0.00	0.00	0.00	0.00	0.00	0.00
101	0	EOC: EOC: Other PT Losses	0.00	0.00	0.00	0.00	0.00	0.00	0.00
101	1	EOC: EOC: Other PT Losses	0.00	0.00	0.00	0.00	0.00	0.00	0.00
101	2	EOC: EOC: Other PT Losses	0.00	0.00	0.00	0.00	0.00	0.00	0.00
102	0	EOC: EOC: Other PT Losses	0.00	0.00	0.00	0.00	0.00	0.00	0.00
102	1	EOC: EOC: Other PT Losses	0.00	0.00	0.00	0.00	0.00	0.00	0.00
102	2	EOC: EOC: Other PT Losses	0.00	0.00	0.00	0.00	0.00	0.00	0.00
103	0	EOC: EOC: Other PT Losses	0.00	0.00	0.00	0.00	0.00	0.00	0.00
103	1	EOC: EOC: Other PT Losses	0.00	0.00	0.00	0.00	0.00	0.00	0.00
103	2	EOC: EOC: Other PT Losses	0.00	0.00	0.00	0.00	0.00	0.00	0.00
104	0	EOC: EOC: Other PT Losses	0.00	0.00	0.00	0.00	0.00	0.00	0.00
104	1	EOC: EOC: Other PT Losses	0.00	0.00	0.00	0.00	0.00	0.00	0.00
104	2	EOC: EOC: Other PT Losses	0.00	0.00	0.00	0.00	0.00	0.00	0.00
106	0	EOC: EOC: Other PT Losses	1.92	-2.40	-2.40	6.66	6.66	-1.44	2.81
106	1	EOC: EOC: Other PT Losses	1.92	-2.10	-2.10	6.33	6.33	-1.21	2.74
106	2	EOC: EOC: Other PT Losses	1.92	-1.80	-1.80	6.00	6.00	-0.97	2.68
107	0	EOC: EOC: Other PT Losses	1.92	-1.80	-1.80	6.00	6.00	-0.97	2.68
107	1	EOC: EOC: Other PT Losses	1.92	-0.06	-0.06	4.09	4.09	0.38	2.32
107	2	EOC: EOC: Other PT Losses	1.92	1.68	1.69	2.18	2.17	1.74	1.97
108	0	EOC: EOC: Other PT Losses	1.92	1.68	1.69	2.18	2.17	1.74	1.97
108	1	EOC: EOC: Other PT Losses	1.92	3.34	3.35	0.35	0.34	3.03	1.62
108	2	EOC: EOC: Other PT Losses	1.92	5.01	5.02	-1.48	-1.48	4.32	1.28
109	0	EOC: EOC: Other PT Losses	1.92	5.01	5.02	-1.48	-1.48	4.32	1.28
109	1	EOC: EOC: Other PT Losses	1.92	5.60	5.61	-2.13	-2.14	4.79	1.16
109	2	EOC: EOC: Other PT Losses	1.92	6.20	6.21	-2.79	-2.80	5.25	1.03
111	0	EOC: EOC: Other PT Losses	3.01	2.77	2.78	3.26	3.25	2.83	3.05
111	1	EOC: EOC: Other PT Losses	3.01	2.82	2.83	3.21	3.20	2.87	3.04
111	2	EOC: EOC: Other PT Losses	3.01	2.87	2.88	3.15	3.14	2.91	3.03
112	0	EOC: EOC: Other PT Losses	3.01	2.87	2.88	3.15	3.14	2.91	3.03
112	1	EOC: EOC: Other PT Losses	3.01	3.30	3.31	2.68	2.67	3.24	2.95
112	2	EOC: EOC: Other PT Losses	3.01	3.73	3.74	2.22	2.20	3.57	2.86
113	0	EOC: EOC: Other PT Losses	3.01	3.73	3.74	2.22	2.20	3.57	2.86
113	1	EOC: EOC: Other PT Losses	3.01	4.11	4.13	1.79	1.77	3.87	2.78
113	2	EOC: EOC: Other PT Losses	3.01	4.50	4.52	1.37	1.35	4.17	2.70
114	0	EOC: EOC: Other PT Losses	3.01	4.50	4.52	1.37	1.35	4.17	2.70
114	1	EOC: EOC: Other PT Losses	3.01	4.63	4.65	1.23	1.21	4.27	2.67
114	2	EOC: EOC: Other PT Losses	3.01	4.76	4.78	1.08	1.06	4.37	2.64
116	0	EOC: EOC: Other PT Losses	3.31	3.81	3.83	2.77	2.75	3.71	3.21
116	1	EOC: EOC: Other PT Losses	3.31	3.79	3.81	2.79	2.77	3.69	3.21
116	2	EOC: EOC: Other PT Losses	3.31	3.77	3.79	2.81	2.79	3.68	3.22

MEMBER STRESSES

DECK & CANOPY MEMBERS
EOC

(-) compression

			LIVE LOAD ON BACK SPAN (LL3)						
Member	Station	Result Case	(P/A) @ Centroid (kips/ft²)	Normal Stress @ Point 1 (kips/ft²)	Normal Stress @ Point 2 (kips/ft²)	Normal Stress @ Point 3 (kips/ft²)	Normal Stress @ Point 4 (kips/ft²)	Normal Stress @ Point 5 (kips/ft²)	Normal Stress @ Point 6 (kips/ft²)
117	0	EOC: EOC: Other PT Losses	3.31	3.77	3.79	2.81	2.79	3.68	3.22
117	1	EOC: EOC: Other PT Losses	3.31	3.76	3.79	2.81	2.79	3.67	3.22
117	2	EOC: EOC: Other PT Losses	3.31	3.76	3.79	2.82	2.79	3.67	3.22
118	0	EOC: EOC: Other PT Losses	3.31	3.76	3.79	2.82	2.79	3.67	3.22
118	1	EOC: EOC: Other PT Losses	3.31	3.73	3.76	2.85	2.83	3.65	3.22
118	2	EOC: EOC: Other PT Losses	3.31	3.69	3.73	2.89	2.86	3.62	3.23
119	0	EOC: EOC: Other PT Losses	3.31	3.69	3.73	2.89	2.86	3.62	3.23
119	1	EOC: EOC: Other PT Losses	3.31	3.70	3.74	2.88	2.85	3.63	3.23
119	2	EOC: EOC: Other PT Losses	3.31	3.71	3.75	2.87	2.84	3.64	3.23
121	0	EOC: EOC: Other PT Losses	2.43	3.47	3.51	1.29	1.26	3.25	2.22
121	1	EOC: EOC: Other PT Losses	2.43	3.44	3.48	1.32	1.29	3.23	2.22
121	2	EOC: EOC: Other PT Losses	2.43	3.42	3.45	1.35	1.32	3.21	2.23
122	0	EOC: EOC: Other PT Losses	2.43	3.42	3.45	1.35	1.32	3.21	2.23
122	1	EOC: EOC: Other PT Losses	2.43	3.18	3.22	1.61	1.57	3.03	2.28
122	2	EOC: EOC: Other PT Losses	2.43	2.94	2.98	1.87	1.83	2.85	2.32
123	0	EOC: EOC: Other PT Losses	2.43	2.94	2.98	1.87	1.83	2.85	2.32
123	1	EOC: EOC: Other PT Losses	2.43	2.70	2.75	2.13	2.09	2.66	2.37
123	2	EOC: EOC: Other PT Losses	2.43	2.47	2.52	2.39	2.35	2.48	2.42
124	0	EOC: EOC: Other PT Losses	2.43	2.47	2.52	2.39	2.35	2.48	2.42
124	1	EOC: EOC: Other PT Losses	2.43	2.44	2.49	2.42	2.37	2.46	2.43
124	2	EOC: EOC: Other PT Losses	2.43	2.42	2.47	2.44	2.40	2.44	2.43
126	0	EOC: EOC: Other PT Losses	0.73	2.96	3.01	-1.73	-1.77	2.48	0.26
126	1	EOC: EOC: Other PT Losses	0.73	2.76	2.81	-1.51	-1.55	2.33	0.30
126	2	EOC: EOC: Other PT Losses	0.73	2.56	2.61	-1.29	-1.33	2.17	0.35
127	0	EOC: EOC: Other PT Losses	0.73	2.56	2.61	-1.29	-1.33	2.17	0.35
127	1	EOC: EOC: Other PT Losses	0.73	1.79	1.85	-0.45	-0.49	1.58	0.50
127	2	EOC: EOC: Other PT Losses	0.73	1.03	1.08	0.39	0.34	0.98	0.66
128	0	EOC: EOC: Other PT Losses	0.73	1.03	1.08	0.39	0.34	0.98	0.66
128	1	EOC: EOC: Other PT Losses	0.73	0.26	0.32	1.24	1.19	0.38	0.82
133	0	EOC: EOC: Other PT Losses	-1.65	3.71	3.78	-7.54	-7.60	2.54	-2.76
133	1	EOC: EOC: Other PT Losses	-1.65	1.38	1.44	-4.98	-5.03	0.73	-2.28
133	2	EOC: EOC: Other PT Losses	-1.65	-0.96	-0.90	-2.41	-2.46	-1.09	-1.80
134	0	EOC: EOC: Other PT Losses	-1.65	-0.96	-0.90	-2.41	-2.46	-1.09	-1.80
134	1	EOC: EOC: Other PT Losses	-1.65	-3.26	-3.20	0.11	0.06	-2.88	-1.32
134	2	EOC: EOC: Other PT Losses	-1.65	-5.55	-5.50	2.63	2.59	-4.66	-0.85
135	0	EOC: EOC: Other PT Losses	-1.65	-5.55	-5.50	2.63	2.59	-4.66	-0.85
135	1	EOC: EOC: Other PT Losses	-1.65	-6.19	-6.14	3.33	3.29	-5.16	-0.72
135	2	EOC: EOC: Other PT Losses	-1.65	-6.82	-6.78	4.03	3.99	-5.65	-0.59
137	0	EOC: EOC: Other PT Losses	-7.81	-4.80	-4.76	-11.11	-11.15	-5.45	-8.43
137	1	EOC: EOC: Other PT Losses	-7.81	-5.43	-5.39	-10.42	-10.46	-5.94	-8.30
137	2	EOC: EOC: Other PT Losses	-7.81	-6.06	-6.02	-9.73	-9.77	-6.43	-8.17
138	0	EOC: EOC: Other PT Losses	-7.81	-6.06	-6.02	-9.73	-9.77	-6.43	-8.17
138	1	EOC: EOC: Other PT Losses	-7.81	-7.87	-7.82	-7.74	-7.78	-7.84	-7.80
138	2	EOC: EOC: Other PT Losses	-7.81	-9.68	-9.63	-5.76	-5.79	-9.24	-7.43
139	0	EOC: EOC: Other PT Losses	-7.81	-9.68	-9.63	-5.76	-5.79	-9.24	-7.43
139	1	EOC: EOC: Other PT Losses	-7.81	-11.68	-11.64	-3.55	-3.59	-10.80	-7.01
139	2	EOC: EOC: Other PT Losses	-7.81	-13.69	-13.65	-1.35	-1.38	-12.36	-6.60

MEMBER STRESSES

DECK & CANOPY MEMBERS
EOC

(-) compression

			LIVE LOAD ON BACK SPAN (LL3)						
Member	Station	Result Case	(P/A) @ Centroid (kips/ft²)	Normal Stress @ Point 1 (kips/ft²)	Normal Stress @ Point 2 (kips/ft²)	Normal Stress @ Point 3 (kips/ft²)	Normal Stress @ Point 4 (kips/ft²)	Normal Stress @ Point 5 (kips/ft²)	Normal Stress @ Point 6 (kips/ft²)
140	0	EOC: EOC: Other PT Losses	-7.81	-13.69	-13.65	-1.35	-1.38	-12.36	-6.60
140	1	EOC: EOC: Other PT Losses	-7.81	-14.15	-14.12	-0.84	-0.88	-12.72	-6.50
140	2	EOC: EOC: Other PT Losses	-7.81	-14.62	-14.58	-0.33	-0.37	-13.08	-6.41
142	0	EOC: EOC: Other PT Losses	-6.91	-14.05	-14.02	0.93	0.90	-12.45	-5.44
142	1	EOC: EOC: Other PT Losses	-6.91	-13.43	-13.39	0.24	0.21	-11.96	-5.57
142	2	EOC: EOC: Other PT Losses	-6.91	-12.80	-12.76	-0.44	-0.47	-11.47	-5.70
143	0	EOC: EOC: Other PT Losses	-6.91	-12.80	-12.76	-0.44	-0.47	-11.47	-5.70
143	1	EOC: EOC: Other PT Losses	-6.91	-11.47	-11.44	-1.90	-1.93	-10.44	-5.97
143	2	EOC: EOC: Other PT Losses	-6.91	-10.14	-10.11	-3.36	-3.39	-9.41	-6.25
144	0	EOC: EOC: Other PT Losses	-6.91	-10.14	-10.11	-3.36	-3.39	-9.41	-6.25
144	1	EOC: EOC: Other PT Losses	-6.91	-8.77	-8.74	-4.86	-4.89	-8.35	-6.53
144	2	EOC: EOC: Other PT Losses	-6.91	-7.40	-7.38	-6.37	-6.39	-7.28	-6.81
145	0	EOC: EOC: Other PT Losses	-6.91	-7.40	-7.38	-6.37	-6.39	-7.28	-6.81
145	1	EOC: EOC: Other PT Losses	-6.91	-6.96	-6.93	-6.85	-6.88	-6.94	-6.90
145	2	EOC: EOC: Other PT Losses	-6.91	-6.52	-6.49	-7.34	-7.36	-6.60	-6.99
147	0	EOC: EOC: Other PT Losses	-5.67	-10.65	-10.63	-0.20	-0.22	-9.53	-4.65
147	1	EOC: EOC: Other PT Losses	-5.67	-10.24	-10.22	-0.65	-0.68	-9.21	-4.73
147	2	EOC: EOC: Other PT Losses	-5.67	-9.83	-9.81	-1.10	-1.13	-8.89	-4.82
148	0	EOC: EOC: Other PT Losses	-5.67	-9.83	-9.81	-1.10	-1.13	-8.89	-4.82
148	1	EOC: EOC: Other PT Losses	-5.67	-9.05	-9.03	-1.96	-1.98	-8.29	-4.98
148	2	EOC: EOC: Other PT Losses	-5.67	-8.27	-8.24	-2.82	-2.84	-7.68	-5.14
149	0	EOC: EOC: Other PT Losses	-5.67	-8.27	-8.24	-2.82	-2.84	-7.68	-5.14
149	1	EOC: EOC: Other PT Losses	-5.67	-7.48	-7.46	-3.69	-3.70	-7.07	-5.30
149	2	EOC: EOC: Other PT Losses	-5.67	-6.69	-6.67	-4.55	-4.57	-6.46	-5.46
150	0	EOC: EOC: Other PT Losses	-5.67	-6.69	-6.67	-4.55	-4.57	-6.46	-5.46
150	1	EOC: EOC: Other PT Losses	-5.67	-6.41	-6.39	-4.86	-4.88	-6.24	-5.52
150	2	EOC: EOC: Other PT Losses	-5.67	-6.12	-6.10	-5.18	-5.19	-6.01	-5.58
152	0	EOC: EOC: Other PT Losses	-3.36	-18.47	-18.46	13.23	13.21	-15.10	-0.25
152	1	EOC: EOC: Other PT Losses	-3.36	-15.67	-15.66	10.15	10.14	-12.92	-0.83
152	2	EOC: EOC: Other PT Losses	-3.36	-12.87	-12.85	7.08	7.06	-10.74	-1.41
153	0	EOC: EOC: Other PT Losses	-3.36	-12.87	-12.85	7.08	7.06	-10.74	-1.41
153	1	EOC: EOC: Other PT Losses	-3.36	-8.29	-8.28	2.05	2.04	-7.19	-2.35
153	2	EOC: EOC: Other PT Losses	-3.36	-3.71	-3.70	-2.97	-2.99	-3.63	-3.29
154	0	EOC: EOC: Other PT Losses	-3.36	-3.71	-3.70	-2.97	-2.99	-3.63	-3.29
154	1	EOC: EOC: Other PT Losses	-3.36	1.26	1.27	-8.43	-8.44	0.23	-4.31
154	2	EOC: EOC: Other PT Losses	-3.36	6.23	6.24	-13.89	-13.90	4.10	-5.34
155	0	EOC: EOC: Other PT Losses	-3.36	6.23	6.24	-13.89	-13.90	4.10	-5.34
155	1	EOC: EOC: Other PT Losses	-3.36	7.78	7.79	-15.60	-15.61	5.30	-5.66
155	2	EOC: EOC: Other PT Losses	-3.36	9.34	9.35	-17.30	-17.31	6.51	-5.97
157	0	EOC: EOC: Other PT Losses	-0.19	-4.43	-4.43	4.48	4.47	-3.48	0.69
157	1	EOC: EOC: Other PT Losses	-0.19	-3.73	-3.72	3.70	3.70	-2.94	0.54
157	2	EOC: EOC: Other PT Losses	-0.19	-3.03	-3.02	2.93	2.92	-2.39	0.40
158	0	EOC: EOC: Other PT Losses	-0.19	-3.03	-3.02	2.93	2.92	-2.39	0.40
158	1	EOC: EOC: Other PT Losses	-0.19	-0.77	-0.77	0.46	0.45	-0.64	-0.07
158	2	EOC: EOC: Other PT Losses	-0.19	1.48	1.48	-2.02	-2.02	1.11	-0.53
159	0	EOC: EOC: Other PT Losses	-0.19	1.48	1.48	-2.02	-2.02	1.11	-0.53
159	1	EOC: EOC: Other PT Losses	-0.19	3.77	3.77	-4.53	-4.53	2.89	-1.00
159	2	EOC: EOC: Other PT Losses	-0.19	6.05	6.05	-7.03	-7.03	4.66	-1.47

MEMBER STRESSES

DECK & CANOPY MEMBERS
EOC

(-) compression

			TEMPERATURE RISE (TU+)						
Member	Station	Result Case	(P/A) @ Centroid (kips/ft²)	Normal Stress @ Point 1 (kips/ft²)	Normal Stress @ Point 2 (kips/ft²)	Normal Stress @ Point 3 (kips/ft²)	Normal Stress @ Point 4 (kips/ft²)	Normal Stress @ Point 5 (kips/ft²)	Normal Stress @ Point 6 (kips/ft²)
1	0	EOC: EOC: Other PT Losses	0.00	0.00	0.00	0.00	0.00	0.00	0.00
1	1	EOC: EOC: Other PT Losses	0.00	0.00	0.00	0.00	0.00	0.00	0.00
1	2	EOC: EOC: Other PT Losses	0.00	0.00	0.00	0.00	0.00	0.00	0.00
2	0	EOC: EOC: Other PT Losses	-0.46	5.22	5.23	0.37	0.37	3.50	-9.01
2	1	EOC: EOC: Other PT Losses	-0.46	2.94	2.94	0.04	0.03	1.91	-5.57
2	2	EOC: EOC: Other PT Losses	-0.46	0.65	0.66	-0.30	-0.30	0.32	-2.14
3	0	EOC: EOC: Other PT Losses	2.88	4.28	4.29	3.09	3.08	3.86	0.77
3	1	EOC: EOC: Other PT Losses	2.88	3.88	3.88	3.03	3.02	3.58	1.38
3	2	EOC: EOC: Other PT Losses	2.88	3.47	3.48	2.97	2.96	3.29	1.99
4	0	EOC: EOC: Other PT Losses	2.88	3.47	3.48	2.97	2.96	3.29	1.99
4	1	EOC: EOC: Other PT Losses	2.88	2.61	2.61	2.84	2.84	2.69	3.29
4	2	EOC: EOC: Other PT Losses	2.88	1.74	1.74	2.72	2.71	2.09	4.59
5	0	EOC: EOC: Other PT Losses	2.88	1.74	1.74	2.72	2.71	2.09	4.59
5	1	EOC: EOC: Other PT Losses	2.88	0.87	0.88	2.59	2.58	1.48	5.90
5	2	EOC: EOC: Other PT Losses	2.88	0.00	0.01	2.46	2.46	0.88	7.20
6	0	EOC: EOC: Other PT Losses	2.88	0.00	0.01	2.46	2.46	0.88	7.20
6	1	EOC: EOC: Other PT Losses	2.88	-0.11	-0.10	2.45	2.44	0.80	7.37
6	2	EOC: EOC: Other PT Losses	2.88	-0.23	-0.22	2.43	2.42	0.72	7.55
7	0	EOC: EOC: Other PT Losses	2.73	1.79	1.79	2.59	2.58	2.07	4.13
7	1	EOC: EOC: Other PT Losses	2.73	0.94	0.94	2.47	2.46	1.48	5.41
7	2	EOC: EOC: Other PT Losses	2.73	0.09	0.10	2.34	2.34	0.89	6.68
8	0	EOC: EOC: Other PT Losses	4.21	1.96	1.97	3.88	3.88	2.65	7.57
8	1	EOC: EOC: Other PT Losses	4.21	1.93	1.94	3.88	3.87	2.63	7.62
8	2	EOC: EOC: Other PT Losses	4.21	1.90	1.91	3.87	3.87	2.60	7.67
9	0	EOC: EOC: Other PT Losses	4.21	1.90	1.91	3.87	3.87	2.60	7.67
9	1	EOC: EOC: Other PT Losses	4.21	1.82	1.83	3.86	3.85	2.55	7.79
9	2	EOC: EOC: Other PT Losses	4.21	1.74	1.75	3.85	3.84	2.49	7.91
10	0	EOC: EOC: Other PT Losses	4.21	1.74	1.75	3.85	3.84	2.49	7.91
10	1	EOC: EOC: Other PT Losses	4.21	1.66	1.67	3.84	3.83	2.44	8.03
10	2	EOC: EOC: Other PT Losses	4.21	1.58	1.59	3.83	3.82	2.38	8.15
11	0	EOC: EOC: Other PT Losses	4.21	1.58	1.59	3.83	3.82	2.38	8.15
11	1	EOC: EOC: Other PT Losses	4.21	1.57	1.58	3.83	3.82	2.37	8.17
11	2	EOC: EOC: Other PT Losses	4.21	1.56	1.56	3.82	3.82	2.36	8.19
12	0	EOC: EOC: Other PT Losses	4.24	2.41	2.42	3.97	3.96	2.97	6.98
12	1	EOC: EOC: Other PT Losses	4.24	2.20	2.21	3.94	3.93	2.82	7.28
12	2	EOC: EOC: Other PT Losses	4.24	2.00	2.01	3.91	3.90	2.68	7.58
13	0	EOC: EOC: Other PT Losses	4.56	2.51	2.52	4.27	4.26	3.13	7.65
13	1	EOC: EOC: Other PT Losses	4.56	2.59	2.60	4.28	4.27	3.20	7.52
13	2	EOC: EOC: Other PT Losses	4.56	2.68	2.69	4.29	4.29	3.26	7.38
14	0	EOC: EOC: Other PT Losses	4.56	2.68	2.69	4.29	4.29	3.26	7.38
14	1	EOC: EOC: Other PT Losses	4.56	2.97	2.98	4.34	4.33	3.46	6.96
14	2	EOC: EOC: Other PT Losses	4.56	3.25	3.26	4.38	4.37	3.65	6.54
15	0	EOC: EOC: Other PT Losses	4.56	3.25	3.26	4.38	4.37	3.65	6.54
15	1	EOC: EOC: Other PT Losses	4.56	3.53	3.54	4.42	4.41	3.85	6.11
15	2	EOC: EOC: Other PT Losses	4.56	3.81	3.82	4.46	4.45	4.04	5.69
16	0	EOC: EOC: Other PT Losses	4.56	3.81	3.82	4.46	4.45	4.04	5.69
16	1	EOC: EOC: Other PT Losses	4.56	3.84	3.85	4.47	4.45	4.06	5.64
16	2	EOC: EOC: Other PT Losses	4.56	3.87	3.88	4.47	4.46	4.09	5.60

MEMBER STRESSES

DECK & CANOPY MEMBERS
EOC

(-) compression

			TEMPERATURE RISE (TU+)						
Member	Station	Result Case	(P/A) @ Centroid (kips/ft²)	Normal Stress @ Point 1 (kips/ft²)	Normal Stress @ Point 2 (kips/ft²)	Normal Stress @ Point 3 (kips/ft²)	Normal Stress @ Point 4 (kips/ft²)	Normal Stress @ Point 5 (kips/ft²)	Normal Stress @ Point 6 (kips/ft²)
17	0	EOC: EOC: Other PT Losses	4.45	3.70	3.72	4.35	4.34	3.94	5.56
17	1	EOC: EOC: Other PT Losses	4.45	4.07	4.08	4.40	4.39	4.19	5.01
17	2	EOC: EOC: Other PT Losses	4.45	4.43	4.44	4.45	4.44	4.44	4.47
18	0	EOC: EOC: Other PT Losses	3.97	4.14	4.15	4.00	3.99	4.09	3.69
18	1	EOC: EOC: Other PT Losses	3.97	3.86	3.87	3.96	3.95	3.90	4.11
18	2	EOC: EOC: Other PT Losses	3.97	3.58	3.60	3.92	3.90	3.70	4.53
19	0	EOC: EOC: Other PT Losses	3.97	3.58	3.60	3.92	3.90	3.70	4.53
19	1	EOC: EOC: Other PT Losses	3.97	2.39	2.41	3.74	3.73	2.88	6.32
19	2	EOC: EOC: Other PT Losses	3.97	1.21	1.22	3.57	3.56	2.05	8.11
20	0	EOC: EOC: Other PT Losses	3.97	1.21	1.22	3.57	3.56	2.05	8.11
20	1	EOC: EOC: Other PT Losses	3.97	0.02	0.03	3.40	3.38	1.22	9.89
20	2	EOC: EOC: Other PT Losses	3.97	-1.17	-1.16	3.22	3.21	0.39	11.68
21	0	EOC: EOC: Other PT Losses	3.97	-1.17	-1.16	3.22	3.21	0.39	11.68
21	1	EOC: EOC: Other PT Losses	3.97	-1.38	-1.37	3.19	3.18	0.25	11.99
21	2	EOC: EOC: Other PT Losses	3.97	-1.59	-1.58	3.16	3.15	0.10	12.31
22	0	EOC: EOC: Other PT Losses	3.06	-3.48	-3.47	2.11	2.10	-1.49	12.90
22	1	EOC: EOC: Other PT Losses	3.06	-2.44	-2.43	2.27	2.25	-0.77	11.33
22	2	EOC: EOC: Other PT Losses	3.06	-1.41	-1.39	2.42	2.40	-0.04	9.77
23	0	EOC: EOC: Other PT Losses	2.39	-3.39	-3.38	1.55	1.54	-1.63	11.07
23	1	EOC: EOC: Other PT Losses	2.39	-2.93	-2.91	1.62	1.61	-1.30	10.38
23	2	EOC: EOC: Other PT Losses	2.39	-2.46	-2.45	1.69	1.68	-0.98	9.68
24	0	EOC: EOC: Other PT Losses	2.39	-2.46	-2.45	1.69	1.68	-0.98	9.68
24	1	EOC: EOC: Other PT Losses	2.39	0.65	0.67	2.15	2.13	1.19	5.00
24	2	EOC: EOC: Other PT Losses	2.39	3.76	3.78	2.60	2.59	3.35	0.32
25	0	EOC: EOC: Other PT Losses	2.39	3.76	3.78	2.60	2.59	3.35	0.32
25	1	EOC: EOC: Other PT Losses	2.39	6.88	6.90	3.06	3.04	5.52	-4.36
25	2	EOC: EOC: Other PT Losses	2.39	9.99	10.01	3.51	3.50	7.69	-9.05
26	0	EOC: EOC: Other PT Losses	2.39	9.99	10.01	3.51	3.50	7.69	-9.05
26	1	EOC: EOC: Other PT Losses	2.39	10.79	10.81	3.63	3.61	8.24	-10.25
26	2	EOC: EOC: Other PT Losses	2.39	11.59	11.61	3.75	3.73	8.80	-11.45
29	0	EOC: EOC: Other PT Losses	3.23	12.90	13.00	4.70	4.60	10.00	-11.39
29	1	EOC: EOC: Other PT Losses	3.23	11.93	12.03	4.56	4.46	9.32	-9.92
29	2	EOC: EOC: Other PT Losses	3.23	10.95	11.05	4.42	4.32	8.64	-8.46
30	0	EOC: EOC: Other PT Losses	3.23	10.95	11.05	4.42	4.32	8.64	-8.46
30	1	EOC: EOC: Other PT Losses	3.23	7.18	7.27	3.86	3.77	6.01	-2.78
30	2	EOC: EOC: Other PT Losses	3.23	3.41	3.49	3.30	3.22	3.38	2.90
31	0	EOC: EOC: Other PT Losses	3.23	3.41	3.49	3.30	3.22	3.38	2.90
31	1	EOC: EOC: Other PT Losses	3.23	-0.36	-0.29	2.75	2.67	0.75	8.58
31	2	EOC: EOC: Other PT Losses	3.23	-4.14	-4.07	2.19	2.12	-1.88	14.25
32	0	EOC: EOC: Other PT Losses	3.23	-4.14	-4.07	2.19	2.12	-1.88	14.25
32	1	EOC: EOC: Other PT Losses	3.23	-4.69	-4.63	2.11	2.04	-2.26	15.09
32	2	EOC: EOC: Other PT Losses	3.23	-5.24	-5.18	2.03	1.96	-2.65	15.92
33	0	EOC: EOC: Other PT Losses	4.19	-3.00	-2.94	3.18	3.12	-0.79	14.96
33	1	EOC: EOC: Other PT Losses	4.19	-3.67	-3.61	3.08	3.02	-1.26	15.97
33	2	EOC: EOC: Other PT Losses	4.19	-4.35	-4.29	2.98	2.92	-1.73	16.99
34	0	EOC: EOC: Other PT Losses	4.23	-2.24	-2.18	3.32	3.26	-0.25	13.91
34	1	EOC: EOC: Other PT Losses	4.23	-2.04	-1.98	3.35	3.29	-0.11	13.62
34	2	EOC: EOC: Other PT Losses	4.23	-1.84	-1.78	3.38	3.32	0.02	13.32

MEMBER STRESSES

DECK & CANOPY MEMBERS
EOC

(-) compression

			TEMPERATURE RISE (TU+)						
Member	Station	Result Case	(P/A) @ Centroid (kips/ft²)	Normal Stress @ Point 1 (kips/ft²)	Normal Stress @ Point 2 (kips/ft²)	Normal Stress @ Point 3 (kips/ft²)	Normal Stress @ Point 4 (kips/ft²)	Normal Stress @ Point 5 (kips/ft²)	Normal Stress @ Point 6 (kips/ft²)
35	0	EOC: EOC: Other PT Losses	4.23	-1.84	-1.78	3.38	3.32	0.02	13.32
35	1	EOC: EOC: Other PT Losses	4.23	-1.23	-1.18	3.47	3.41	0.45	12.41
35	2	EOC: EOC: Other PT Losses	4.23	-0.63	-0.57	3.55	3.50	0.87	11.49
36	0	EOC: EOC: Other PT Losses	4.23	-0.63	-0.57	3.55	3.50	0.87	11.49
36	1	EOC: EOC: Other PT Losses	4.23	-0.01	0.04	3.64	3.59	1.29	10.58
36	2	EOC: EOC: Other PT Losses	4.23	0.60	0.64	3.73	3.68	1.72	9.66
37	0	EOC: EOC: Other PT Losses	4.23	0.60	0.64	3.73	3.68	1.72	9.66
37	1	EOC: EOC: Other PT Losses	4.23	0.91	0.96	3.77	3.73	1.94	9.19
37	2	EOC: EOC: Other PT Losses	4.23	1.23	1.27	3.82	3.77	2.16	8.72
38	0	EOC: EOC: Other PT Losses	4.75	1.97	2.02	4.37	4.32	2.83	8.89
38	1	EOC: EOC: Other PT Losses	4.75	1.74	1.78	4.34	4.29	2.67	9.25
38	2	EOC: EOC: Other PT Losses	4.75	1.50	1.55	4.30	4.26	2.50	9.60
39	0	EOC: EOC: Other PT Losses	4.68	1.73	1.77	4.27	4.23	2.64	9.08
39	1	EOC: EOC: Other PT Losses	4.68	1.64	1.69	4.26	4.21	2.58	9.21
39	2	EOC: EOC: Other PT Losses	4.68	1.56	1.60	4.25	4.20	2.52	9.34
40	0	EOC: EOC: Other PT Losses	4.68	1.56	1.60	4.25	4.20	2.52	9.34
40	1	EOC: EOC: Other PT Losses	4.68	1.30	1.34	4.21	4.17	2.34	9.73
40	2	EOC: EOC: Other PT Losses	4.68	1.04	1.08	4.17	4.13	2.16	10.11
41	0	EOC: EOC: Other PT Losses	4.68	1.04	1.08	4.17	4.13	2.16	10.11
41	1	EOC: EOC: Other PT Losses	4.68	0.78	0.82	4.13	4.09	1.98	10.50
41	2	EOC: EOC: Other PT Losses	4.68	0.53	0.56	4.09	4.06	1.80	10.89
42	0	EOC: EOC: Other PT Losses	4.68	0.53	0.56	4.09	4.06	1.80	10.89
42	1	EOC: EOC: Other PT Losses	4.68	0.37	0.40	4.07	4.03	1.69	11.13
42	2	EOC: EOC: Other PT Losses	4.68	0.21	0.24	4.04	4.01	1.58	11.37
43	0	EOC: EOC: Other PT Losses	4.29	-0.54	-0.51	3.60	3.57	0.94	11.54
43	1	EOC: EOC: Other PT Losses	4.29	-0.38	-0.35	3.63	3.60	1.05	11.29
43	2	EOC: EOC: Other PT Losses	4.29	-0.21	-0.18	3.65	3.62	1.17	11.04
44	0	EOC: EOC: Other PT Losses	4.35	-1.47	-1.44	3.52	3.49	0.31	13.08
44	1	EOC: EOC: Other PT Losses	4.35	-1.54	-1.51	3.51	3.48	0.26	13.19
44	2	EOC: EOC: Other PT Losses	4.35	-1.61	-1.59	3.50	3.47	0.21	13.30
45	0	EOC: EOC: Other PT Losses	4.35	-1.61	-1.59	3.50	3.47	0.21	13.30
45	1	EOC: EOC: Other PT Losses	4.35	-1.82	-1.79	3.46	3.44	0.07	13.61
45	2	EOC: EOC: Other PT Losses	4.35	-2.02	-2.00	3.43	3.41	-0.08	13.92
46	0	EOC: EOC: Other PT Losses	4.35	-2.02	-2.00	3.43	3.41	-0.08	13.92
46	1	EOC: EOC: Other PT Losses	4.35	-2.23	-2.21	3.40	3.38	-0.22	14.23
46	2	EOC: EOC: Other PT Losses	4.35	-2.43	-2.41	3.37	3.35	-0.36	14.54
47	0	EOC: EOC: Other PT Losses	4.35	-2.43	-2.41	3.37	3.35	-0.36	14.54
47	1	EOC: EOC: Other PT Losses	4.35	-2.58	-2.56	3.35	3.33	-0.47	14.76
47	2	EOC: EOC: Other PT Losses	4.35	-2.72	-2.71	3.33	3.31	-0.57	14.98
48	0	EOC: EOC: Other PT Losses	2.86	-5.68	-5.66	1.62	1.61	-3.08	15.68
48	1	EOC: EOC: Other PT Losses	2.86	-5.06	-5.04	1.71	1.70	-2.64	14.75
48	2	EOC: EOC: Other PT Losses	2.86	-4.44	-4.42	1.80	1.79	-2.21	13.82
49	0	EOC: EOC: Other PT Losses	3.15	-7.69	-7.67	1.57	1.56	-4.39	19.42
49	1	EOC: EOC: Other PT Losses	3.15	-7.13	-7.12	1.65	1.64	-4.00	18.59
49	2	EOC: EOC: Other PT Losses	3.15	-6.58	-6.56	1.73	1.72	-3.62	17.76
50	0	EOC: EOC: Other PT Losses	3.15	-6.58	-6.56	1.73	1.72	-3.62	17.76
50	1	EOC: EOC: Other PT Losses	3.15	-5.11	-5.10	1.95	1.94	-2.60	15.55
50	2	EOC: EOC: Other PT Losses	3.15	-3.64	-3.64	2.16	2.15	-1.58	13.35

MEMBER STRESSES

DECK & CANOPY MEMBERS
EOC

(-) compression

			TEMPERATURE RISE (TU+)						
Member	Station	Result Case	(P/A) @ Centroid (kips/ft²)	Normal Stress @ Point 1 (kips/ft²)	Normal Stress @ Point 2 (kips/ft²)	Normal Stress @ Point 3 (kips/ft²)	Normal Stress @ Point 4 (kips/ft²)	Normal Stress @ Point 5 (kips/ft²)	Normal Stress @ Point 6 (kips/ft²)
51	0	EOC: EOC: Other PT Losses	3.15	-3.64	-3.64	2.16	2.15	-1.58	13.35
51	1	EOC: EOC: Other PT Losses	3.15	-2.18	-2.17	2.37	2.37	-0.56	11.15
51	2	EOC: EOC: Other PT Losses	3.15	-0.71	-0.71	2.59	2.58	0.46	8.94
52	0	EOC: EOC: Other PT Losses	3.15	-0.71	-0.71	2.59	2.58	0.46	8.94
52	1	EOC: EOC: Other PT Losses	3.15	0.46	0.46	2.75	2.75	1.27	7.19
52	2	EOC: EOC: Other PT Losses	3.15	1.62	1.62	2.92	2.92	2.08	5.44
60	0	EOC: EOC: Other PT Losses	0.00	0.00	0.00	0.00	0.00	0.00	0.00
60	1	EOC: EOC: Other PT Losses	0.00	0.00	0.00	0.00	0.00	0.00	0.00
60	2	EOC: EOC: Other PT Losses	0.00	0.00	0.00	0.00	0.00	0.00	0.00
101	0	EOC: EOC: Other PT Losses	0.00	0.00	0.00	0.00	0.00	0.00	0.00
101	1	EOC: EOC: Other PT Losses	0.00	0.00	0.00	0.00	0.00	0.00	0.00
101	2	EOC: EOC: Other PT Losses	0.00	0.00	0.00	0.00	0.00	0.00	0.00
102	0	EOC: EOC: Other PT Losses	0.00	0.00	0.00	0.00	0.00	0.00	0.00
102	1	EOC: EOC: Other PT Losses	0.00	0.00	0.00	0.00	0.00	0.00	0.00
102	2	EOC: EOC: Other PT Losses	0.00	0.00	0.00	0.00	0.00	0.00	0.00
103	0	EOC: EOC: Other PT Losses	0.00	0.00	0.00	0.00	0.00	0.00	0.00
103	1	EOC: EOC: Other PT Losses	0.00	0.00	0.00	0.00	0.00	0.00	0.00
103	2	EOC: EOC: Other PT Losses	0.00	0.00	0.00	0.00	0.00	0.00	0.00
104	0	EOC: EOC: Other PT Losses	0.00	0.00	0.00	0.00	0.00	0.00	0.00
104	1	EOC: EOC: Other PT Losses	0.00	0.00	0.00	0.00	0.00	0.00	0.00
104	2	EOC: EOC: Other PT Losses	0.00	0.00	0.00	0.00	0.00	0.00	0.00
106	0	EOC: EOC: Other PT Losses	-4.08	3.98	3.98	-12.93	-12.93	2.19	-5.74
106	1	EOC: EOC: Other PT Losses	-4.08	3.38	3.38	-12.26	-12.26	1.72	-5.61
106	2	EOC: EOC: Other PT Losses	-4.08	2.77	2.77	-11.60	-11.60	1.25	-5.49
107	0	EOC: EOC: Other PT Losses	-4.08	2.77	2.77	-11.60	-11.60	1.25	-5.49
107	1	EOC: EOC: Other PT Losses	-4.08	-0.75	-0.75	-7.73	-7.73	-1.49	-4.76
107	2	EOC: EOC: Other PT Losses	-4.08	-4.27	-4.27	-3.86	-3.86	-4.23	-4.04
108	0	EOC: EOC: Other PT Losses	-4.08	-4.27	-4.27	-3.86	-3.86	-4.23	-4.04
108	1	EOC: EOC: Other PT Losses	-4.08	-7.64	-7.63	-0.17	-0.17	-6.84	-3.34
108	2	EOC: EOC: Other PT Losses	-4.08	-11.00	-11.00	3.52	3.52	-9.45	-2.65
109	0	EOC: EOC: Other PT Losses	-4.08	-11.00	-11.00	3.52	3.52	-9.45	-2.65
109	1	EOC: EOC: Other PT Losses	-4.08	-12.21	-12.20	4.85	4.85	-10.39	-2.40
109	2	EOC: EOC: Other PT Losses	-4.08	-13.41	-13.41	6.18	6.17	-11.33	-2.15
111	0	EOC: EOC: Other PT Losses	-4.91	-8.03	-8.02	-1.50	-1.50	-7.33	-4.27
111	1	EOC: EOC: Other PT Losses	-4.91	-7.93	-7.93	-1.60	-1.61	-7.26	-4.29
111	2	EOC: EOC: Other PT Losses	-4.91	-7.83	-7.83	-1.71	-1.71	-7.18	-4.31
112	0	EOC: EOC: Other PT Losses	-4.91	-7.83	-7.83	-1.71	-1.71	-7.18	-4.31
112	1	EOC: EOC: Other PT Losses	-4.91	-7.43	-7.42	-2.16	-2.16	-6.86	-4.40
112	2	EOC: EOC: Other PT Losses	-4.91	-7.02	-7.01	-2.61	-2.61	-6.55	-4.48
113	0	EOC: EOC: Other PT Losses	-4.91	-7.02	-7.01	-2.61	-2.61	-6.55	-4.48
113	1	EOC: EOC: Other PT Losses	-4.91	-6.57	-6.57	-3.09	-3.10	-6.20	-4.57
113	2	EOC: EOC: Other PT Losses	-4.91	-6.13	-6.12	-3.58	-3.59	-5.86	-4.66
114	0	EOC: EOC: Other PT Losses	-4.91	-6.13	-6.12	-3.58	-3.59	-5.86	-4.66
114	1	EOC: EOC: Other PT Losses	-4.91	-6.03	-6.02	-3.69	-3.70	-5.78	-4.69
114	2	EOC: EOC: Other PT Losses	-4.91	-5.93	-5.92	-3.80	-3.80	-5.70	-4.71
116	0	EOC: EOC: Other PT Losses	-3.09	-7.15	-7.15	1.37	1.37	-6.25	-2.25
116	1	EOC: EOC: Other PT Losses	-3.09	-6.94	-6.94	1.14	1.14	-6.08	-2.30
116	2	EOC: EOC: Other PT Losses	-3.09	-6.73	-6.73	0.91	0.91	-5.92	-2.34

MEMBER STRESSES

DECK & CANOPY MEMBERS
EOC

(-) compression

			TEMPERATURE RISE (TU+)						
Member	Station	Result Case	(P/A) @ Centroid (kips/ft²)	Normal Stress @ Point 1 (kips/ft²)	Normal Stress @ Point 2 (kips/ft²)	Normal Stress @ Point 3 (kips/ft²)	Normal Stress @ Point 4 (kips/ft²)	Normal Stress @ Point 5 (kips/ft²)	Normal Stress @ Point 6 (kips/ft²)
117	0	EOC: EOC: Other PT Losses	-3.09	-6.73	-6.73	0.91	0.91	-5.92	-2.34
117	1	EOC: EOC: Other PT Losses	-3.09	-5.32	-5.31	-0.64	-0.64	-4.82	-2.63
117	2	EOC: EOC: Other PT Losses	-3.09	-3.91	-3.90	-2.19	-2.19	-3.72	-2.92
118	0	EOC: EOC: Other PT Losses	-3.09	-3.91	-3.90	-2.19	-2.19	-3.72	-2.92
118	1	EOC: EOC: Other PT Losses	-3.09	-2.51	-2.50	-3.73	-3.74	-2.63	-3.21
118	2	EOC: EOC: Other PT Losses	-3.09	-1.10	-1.09	-5.27	-5.28	-1.54	-3.50
119	0	EOC: EOC: Other PT Losses	-3.09	-1.10	-1.09	-5.27	-5.28	-1.54	-3.50
119	1	EOC: EOC: Other PT Losses	-3.09	-0.82	-0.81	-5.58	-5.59	-1.32	-3.56
119	2	EOC: EOC: Other PT Losses	-3.09	-0.53	-0.53	-5.89	-5.90	-1.10	-3.62
121	0	EOC: EOC: Other PT Losses	3.00	-4.11	-4.10	10.80	10.80	-2.52	4.46
121	1	EOC: EOC: Other PT Losses	3.00	-3.67	-3.67	10.33	10.32	-2.18	4.37
121	2	EOC: EOC: Other PT Losses	3.00	-3.24	-3.23	9.86	9.85	-1.85	4.29
122	0	EOC: EOC: Other PT Losses	3.00	-3.24	-3.23	9.86	9.85	-1.85	4.29
122	1	EOC: EOC: Other PT Losses	3.00	-0.26	-0.25	6.58	6.57	0.47	3.67
122	2	EOC: EOC: Other PT Losses	3.00	2.72	2.74	3.30	3.29	2.79	3.06
123	0	EOC: EOC: Other PT Losses	3.00	2.72	2.74	3.30	3.29	2.79	3.06
123	1	EOC: EOC: Other PT Losses	3.00	5.71	5.72	0.03	0.02	5.11	2.44
123	2	EOC: EOC: Other PT Losses	3.00	8.69	8.71	-3.25	-3.26	7.43	1.83
124	0	EOC: EOC: Other PT Losses	3.00	8.69	8.71	-3.25	-3.26	7.43	1.83
124	1	EOC: EOC: Other PT Losses	3.00	9.07	9.08	-3.66	-3.67	7.72	1.75
124	2	EOC: EOC: Other PT Losses	3.00	9.45	9.46	-4.08	-4.09	8.02	1.67
126	0	EOC: EOC: Other PT Losses	20.22	5.80	5.81	36.05	36.04	9.02	23.19
126	1	EOC: EOC: Other PT Losses	20.22	7.47	7.49	34.21	34.20	10.32	22.84
126	2	EOC: EOC: Other PT Losses	20.22	9.15	9.16	32.37	32.36	11.62	22.50
127	0	EOC: EOC: Other PT Losses	20.22	9.15	9.16	32.37	32.36	11.62	22.50
127	1	EOC: EOC: Other PT Losses	20.22	15.04	15.05	25.91	25.89	16.20	21.28
127	2	EOC: EOC: Other PT Losses	20.22	20.93	20.95	19.44	19.42	20.78	20.07
128	0	EOC: EOC: Other PT Losses	20.22	20.93	20.95	19.44	19.42	20.78	20.07
128	1	EOC: EOC: Other PT Losses	20.22	26.96	26.98	12.81	12.80	25.47	18.83
133	0	EOC: EOC: Other PT Losses	19.23	32.80	32.83	4.33	4.31	29.79	16.44
133	1	EOC: EOC: Other PT Losses	19.23	27.08	27.11	10.61	10.59	25.34	17.62
133	2	EOC: EOC: Other PT Losses	19.23	21.36	21.38	16.90	16.88	20.89	18.79
134	0	EOC: EOC: Other PT Losses	19.23	21.36	21.38	16.90	16.88	20.89	18.79
134	1	EOC: EOC: Other PT Losses	19.23	15.62	15.64	23.19	23.18	16.44	19.97
134	2	EOC: EOC: Other PT Losses	19.23	9.89	9.91	29.49	29.48	11.98	21.16
135	0	EOC: EOC: Other PT Losses	19.23	9.89	9.91	29.49	29.48	11.98	21.16
135	1	EOC: EOC: Other PT Losses	19.23	8.44	8.46	31.09	31.07	10.85	21.45
135	2	EOC: EOC: Other PT Losses	19.23	6.98	7.00	32.68	32.66	9.72	21.75
137	0	EOC: EOC: Other PT Losses	0.75	13.36	13.38	-13.09	-13.11	10.56	-1.84
137	1	EOC: EOC: Other PT Losses	0.75	11.65	11.66	-11.21	-11.23	9.23	-1.49
137	2	EOC: EOC: Other PT Losses	0.75	9.93	9.95	-9.33	-9.34	7.89	-1.14
138	0	EOC: EOC: Other PT Losses	0.75	9.93	9.95	-9.33	-9.34	7.89	-1.14
138	1	EOC: EOC: Other PT Losses	0.75	4.80	4.81	-3.69	-3.70	3.90	-0.08
138	2	EOC: EOC: Other PT Losses	0.75	-0.34	-0.32	1.95	1.93	-0.09	0.98
139	0	EOC: EOC: Other PT Losses	0.75	-0.34	-0.32	1.95	1.93	-0.09	0.98
139	1	EOC: EOC: Other PT Losses	0.75	-5.82	-5.80	7.96	7.95	-4.35	2.10
139	2	EOC: EOC: Other PT Losses	0.75	-11.30	-11.28	13.98	13.96	-8.60	3.23

MEMBER STRESSES

DECK & CANOPY MEMBERS
EOC

(-) compression

			TEMPERATURE RISE (TU+)						
Member	Station	Result Case	(P/A) @ Centroid (kips/ft²)	Normal Stress @ Point 1 (kips/ft²)	Normal Stress @ Point 2 (kips/ft²)	Normal Stress @ Point 3 (kips/ft²)	Normal Stress @ Point 4 (kips/ft²)	Normal Stress @ Point 5 (kips/ft²)	Normal Stress @ Point 6 (kips/ft²)
140	0	EOC: EOC: Other PT Losses	0.75	-11.30	-11.28	13.98	13.96	-8.61	3.23
140	1	EOC: EOC: Other PT Losses	0.75	-12.76	-12.75	15.59	15.57	-9.74	3.53
140	2	EOC: EOC: Other PT Losses	0.75	-14.23	-14.21	17.20	17.18	-10.88	3.83
142	0	EOC: EOC: Other PT Losses	-3.27	-1.11	-1.10	-5.63	-5.65	-1.59	-3.71
142	1	EOC: EOC: Other PT Losses	-3.27	-2.10	-2.08	-4.55	-4.57	-2.35	-3.51
142	2	EOC: EOC: Other PT Losses	-3.27	-3.08	-3.07	-3.47	-3.48	-3.12	-3.31
143	0	EOC: EOC: Other PT Losses	-3.27	-3.08	-3.07	-3.47	-3.48	-3.12	-3.31
143	1	EOC: EOC: Other PT Losses	-3.27	-5.05	-5.04	-1.31	-1.32	-4.65	-2.90
143	2	EOC: EOC: Other PT Losses	-3.27	-7.03	-7.01	0.86	0.85	-6.18	-2.49
144	0	EOC: EOC: Other PT Losses	-3.27	-7.03	-7.01	0.86	0.85	-6.18	-2.49
144	1	EOC: EOC: Other PT Losses	-3.27	-9.20	-9.19	3.25	3.24	-7.87	-2.05
144	2	EOC: EOC: Other PT Losses	-3.27	-11.38	-11.37	5.64	5.63	-9.57	-1.60
145	0	EOC: EOC: Other PT Losses	-3.27	-11.38	-11.37	5.64	5.63	-9.57	-1.60
145	1	EOC: EOC: Other PT Losses	-3.27	-11.93	-11.92	6.25	6.24	-10.00	-1.48
145	2	EOC: EOC: Other PT Losses	-3.27	-12.49	-12.48	6.86	6.85	-10.43	-1.37
147	0	EOC: EOC: Other PT Losses	-4.50	-10.52	-10.51	2.11	2.10	-9.17	-3.26
147	1	EOC: EOC: Other PT Losses	-4.50	-10.42	-10.40	2.00	1.99	-9.09	-3.28
147	2	EOC: EOC: Other PT Losses	-4.50	-10.31	-10.30	1.88	1.87	-9.01	-3.30
148	0	EOC: EOC: Other PT Losses	-4.50	-10.31	-10.30	1.88	1.87	-9.01	-3.30
148	1	EOC: EOC: Other PT Losses	-4.50	-10.10	-10.09	1.64	1.63	-8.84	-3.35
148	2	EOC: EOC: Other PT Losses	-4.50	-9.88	-9.87	1.40	1.40	-8.67	-3.39
149	0	EOC: EOC: Other PT Losses	-4.50	-9.88	-9.87	1.40	1.40	-8.67	-3.39
149	1	EOC: EOC: Other PT Losses	-4.50	-9.69	-9.68	1.20	1.19	-8.53	-3.43
149	2	EOC: EOC: Other PT Losses	-4.50	-9.50	-9.49	0.99	0.98	-8.38	-3.47
150	0	EOC: EOC: Other PT Losses	-4.50	-9.50	-9.49	0.99	0.98	-8.38	-3.47
150	1	EOC: EOC: Other PT Losses	-4.50	-9.40	-9.39	0.88	0.88	-8.31	-3.49
150	2	EOC: EOC: Other PT Losses	-4.50	-9.30	-9.29	0.77	0.77	-8.23	-3.51
152	0	EOC: EOC: Other PT Losses	-3.84	-22.08	-22.07	16.19	16.18	-18.01	-0.08
152	1	EOC: EOC: Other PT Losses	-3.84	-19.23	-19.22	13.06	13.05	-15.80	-0.67
152	2	EOC: EOC: Other PT Losses	-3.84	-16.38	-16.37	9.93	9.92	-13.58	-1.26
153	0	EOC: EOC: Other PT Losses	-3.84	-16.38	-16.37	9.93	9.92	-13.58	-1.26
153	1	EOC: EOC: Other PT Losses	-3.84	-11.72	-11.71	4.82	4.81	-9.96	-2.22
153	2	EOC: EOC: Other PT Losses	-3.84	-7.06	-7.06	-0.30	-0.30	-6.34	-3.18
154	0	EOC: EOC: Other PT Losses	-3.84	-7.06	-7.06	-0.30	-0.30	-6.34	-3.18
154	1	EOC: EOC: Other PT Losses	-3.84	-2.01	-2.00	-5.85	-5.86	-2.41	-4.22
154	2	EOC: EOC: Other PT Losses	-3.84	3.05	3.05	-11.40	-11.41	1.52	-5.26
155	0	EOC: EOC: Other PT Losses	-3.84	3.05	3.06	-11.40	-11.40	1.52	-5.26
155	1	EOC: EOC: Other PT Losses	-3.84	4.63	4.64	-13.14	-13.14	2.75	-5.58
155	2	EOC: EOC: Other PT Losses	-3.84	6.22	6.22	-14.88	-14.88	3.98	-5.91
157	0	EOC: EOC: Other PT Losses	-0.94	-17.51	-17.50	17.25	17.25	-13.81	2.47
157	1	EOC: EOC: Other PT Losses	-0.94	-14.97	-14.96	14.46	14.46	-11.84	1.95
157	2	EOC: EOC: Other PT Losses	-0.94	-12.43	-12.43	11.68	11.67	-9.87	1.43
158	0	EOC: EOC: Other PT Losses	-0.94	-12.43	-12.43	11.68	11.67	-9.87	1.43
158	1	EOC: EOC: Other PT Losses	-0.94	-4.30	-4.30	2.75	2.75	-3.55	-0.25
158	2	EOC: EOC: Other PT Losses	-0.94	3.83	3.83	-6.18	-6.18	2.77	-1.92
159	0	EOC: EOC: Other PT Losses	-0.94	3.83	3.83	-6.18	-6.18	2.77	-1.92
159	1	EOC: EOC: Other PT Losses	-0.94	12.07	12.08	-15.23	-15.23	9.18	-3.62
159	2	EOC: EOC: Other PT Losses	-0.94	20.32	20.32	-24.28	-24.28	15.58	-5.32

MEMBER STRESSES

DECK & CANOPY MEMBERS
EOC

(-) compression

			TEMPERATURE FALL (TU-)						
Member	Station	Result Case	(P/A) @ Centroid (kips/ft²)	Normal Stress @ Point 1 (kips/ft²)	Normal Stress @ Point 2 (kips/ft²)	Normal Stress @ Point 3 (kips/ft²)	Normal Stress @ Point 4 (kips/ft²)	Normal Stress @ Point 5 (kips/ft²)	Normal Stress @ Point 6 (kips/ft²)
1	0	EOC: EOC: Other PT Losses	0.00	0.00	0.00	0.00	0.00	0.00	0.00
1	1	EOC: EOC: Other PT Losses	0.00	0.00	0.00	0.00	0.00	0.00	0.00
1	2	EOC: EOC: Other PT Losses	0.00	0.00	0.00	0.00	0.00	0.00	0.00
2	0	EOC: EOC: Other PT Losses	0.46	-5.22	-5.23	-0.37	-0.37	-3.50	9.01
2	1	EOC: EOC: Other PT Losses	0.46	-2.94	-2.94	-0.04	-0.03	-1.91	5.57
2	2	EOC: EOC: Other PT Losses	0.46	-0.65	-0.66	0.30	0.30	-0.32	2.14
3	0	EOC: EOC: Other PT Losses	-2.88	-4.28	-4.29	-3.09	-3.08	-3.86	-0.77
3	1	EOC: EOC: Other PT Losses	-2.88	-3.88	-3.88	-3.03	-3.02	-3.58	-1.38
3	2	EOC: EOC: Other PT Losses	-2.88	-3.47	-3.48	-2.97	-2.96	-3.29	-1.99
4	0	EOC: EOC: Other PT Losses	-2.88	-3.47	-3.48	-2.97	-2.96	-3.29	-1.99
4	1	EOC: EOC: Other PT Losses	-2.88	-2.61	-2.61	-2.84	-2.84	-2.69	-3.29
4	2	EOC: EOC: Other PT Losses	-2.88	-1.74	-1.74	-2.72	-2.71	-2.09	-4.59
5	0	EOC: EOC: Other PT Losses	-2.88	-1.74	-1.74	-2.72	-2.71	-2.09	-4.59
5	1	EOC: EOC: Other PT Losses	-2.88	-0.87	-0.88	-2.59	-2.58	-1.48	-5.90
5	2	EOC: EOC: Other PT Losses	-2.88	0.00	-0.01	-2.46	-2.46	-0.88	-7.20
6	0	EOC: EOC: Other PT Losses	-2.88	0.00	-0.01	-2.46	-2.46	-0.88	-7.20
6	1	EOC: EOC: Other PT Losses	-2.88	0.11	0.10	-2.45	-2.44	-0.80	-7.37
6	2	EOC: EOC: Other PT Losses	-2.88	0.23	0.22	-2.43	-2.42	-0.72	-7.55
7	0	EOC: EOC: Other PT Losses	-2.73	-1.79	-1.79	-2.59	-2.58	-2.07	-4.13
7	1	EOC: EOC: Other PT Losses	-2.73	-0.94	-0.94	-2.47	-2.46	-1.48	-5.41
7	2	EOC: EOC: Other PT Losses	-2.73	-0.09	-0.10	-2.34	-2.34	-0.89	-6.68
8	0	EOC: EOC: Other PT Losses	-4.21	-1.96	-1.97	-3.88	-3.88	-2.65	-7.57
8	1	EOC: EOC: Other PT Losses	-4.21	-1.93	-1.94	-3.88	-3.87	-2.63	-7.62
8	2	EOC: EOC: Other PT Losses	-4.21	-1.90	-1.91	-3.87	-3.87	-2.60	-7.67
9	0	EOC: EOC: Other PT Losses	-4.21	-1.90	-1.91	-3.87	-3.87	-2.60	-7.67
9	1	EOC: EOC: Other PT Losses	-4.21	-1.82	-1.83	-3.86	-3.85	-2.55	-7.79
9	2	EOC: EOC: Other PT Losses	-4.21	-1.74	-1.75	-3.85	-3.84	-2.49	-7.91
10	0	EOC: EOC: Other PT Losses	-4.21	-1.74	-1.75	-3.85	-3.84	-2.49	-7.91
10	1	EOC: EOC: Other PT Losses	-4.21	-1.66	-1.67	-3.84	-3.83	-2.44	-8.03
10	2	EOC: EOC: Other PT Losses	-4.21	-1.58	-1.59	-3.83	-3.82	-2.38	-8.15
11	0	EOC: EOC: Other PT Losses	-4.21	-1.58	-1.59	-3.83	-3.82	-2.38	-8.15
11	1	EOC: EOC: Other PT Losses	-4.21	-1.57	-1.58	-3.83	-3.82	-2.37	-8.17
11	2	EOC: EOC: Other PT Losses	-4.21	-1.56	-1.56	-3.82	-3.82	-2.36	-8.19
12	0	EOC: EOC: Other PT Losses	-4.24	-2.41	-2.42	-3.97	-3.96	-2.97	-6.98
12	1	EOC: EOC: Other PT Losses	-4.24	-2.20	-2.21	-3.94	-3.93	-2.82	-7.28
12	2	EOC: EOC: Other PT Losses	-4.24	-2.00	-2.01	-3.91	-3.90	-2.68	-7.58
13	0	EOC: EOC: Other PT Losses	-4.56	-2.51	-2.52	-4.27	-4.26	-3.13	-7.65
13	1	EOC: EOC: Other PT Losses	-4.56	-2.59	-2.60	-4.28	-4.27	-3.20	-7.52
13	2	EOC: EOC: Other PT Losses	-4.56	-2.68	-2.69	-4.29	-4.29	-3.26	-7.38
14	0	EOC: EOC: Other PT Losses	-4.56	-2.68	-2.69	-4.29	-4.29	-3.26	-7.38
14	1	EOC: EOC: Other PT Losses	-4.56	-2.97	-2.98	-4.34	-4.33	-3.46	-6.96
14	2	EOC: EOC: Other PT Losses	-4.56	-3.25	-3.26	-4.38	-4.37	-3.65	-6.54
15	0	EOC: EOC: Other PT Losses	-4.56	-3.25	-3.26	-4.38	-4.37	-3.65	-6.54
15	1	EOC: EOC: Other PT Losses	-4.56	-3.53	-3.54	-4.42	-4.41	-3.85	-6.11
15	2	EOC: EOC: Other PT Losses	-4.56	-3.81	-3.82	-4.46	-4.45	-4.04	-5.69
16	0	EOC: EOC: Other PT Losses	-4.56	-3.81	-3.82	-4.46	-4.45	-4.04	-5.69
16	1	EOC: EOC: Other PT Losses	-4.56	-3.84	-3.85	-4.47	-4.45	-4.06	-5.64
16	2	EOC: EOC: Other PT Losses	-4.56	-3.87	-3.88	-4.47	-4.46	-4.09	-5.60

MEMBER STRESSES

DECK & CANOPY MEMBERS
EOC

(-) compression

			TEMPERATURE FALL (TU-)						
Member	Station	Result Case	(P/A) @ Centroid (kips/ft²)	Normal Stress @ Point 1 (kips/ft²)	Normal Stress @ Point 2 (kips/ft²)	Normal Stress @ Point 3 (kips/ft²)	Normal Stress @ Point 4 (kips/ft²)	Normal Stress @ Point 5 (kips/ft²)	Normal Stress @ Point 6 (kips/ft²)
17	0	EOC: EOC: Other PT Losses	-4.45	-3.70	-3.72	-4.35	-4.34	-3.94	-5.56
17	1	EOC: EOC: Other PT Losses	-4.45	-4.07	-4.08	-4.40	-4.39	-4.19	-5.01
17	2	EOC: EOC: Other PT Losses	-4.45	-4.43	-4.44	-4.45	-4.44	-4.44	-4.47
18	0	EOC: EOC: Other PT Losses	-3.97	-4.14	-4.15	-4.00	-3.99	-4.09	-3.69
18	1	EOC: EOC: Other PT Losses	-3.97	-3.86	-3.87	-3.96	-3.95	-3.90	-4.11
18	2	EOC: EOC: Other PT Losses	-3.97	-3.58	-3.60	-3.92	-3.90	-3.70	-4.53
19	0	EOC: EOC: Other PT Losses	-3.97	-3.58	-3.60	-3.92	-3.90	-3.70	-4.53
19	1	EOC: EOC: Other PT Losses	-3.97	-2.39	-2.41	-3.74	-3.73	-2.88	-6.32
19	2	EOC: EOC: Other PT Losses	-3.97	-1.21	-1.22	-3.57	-3.56	-2.05	-8.11
20	0	EOC: EOC: Other PT Losses	-3.97	-1.21	-1.22	-3.57	-3.56	-2.05	-8.11
20	1	EOC: EOC: Other PT Losses	-3.97	-0.02	-0.03	-3.40	-3.38	-1.22	-9.89
20	2	EOC: EOC: Other PT Losses	-3.97	1.17	1.16	-3.22	-3.21	-0.39	-11.68
21	0	EOC: EOC: Other PT Losses	-3.97	1.17	1.16	-3.22	-3.21	-0.39	-11.68
21	1	EOC: EOC: Other PT Losses	-3.97	1.38	1.37	-3.19	-3.18	-0.25	-11.99
21	2	EOC: EOC: Other PT Losses	-3.97	1.59	1.58	-3.16	-3.15	-0.10	-12.31
22	0	EOC: EOC: Other PT Losses	-3.06	3.48	3.47	-2.11	-2.10	1.49	-12.90
22	1	EOC: EOC: Other PT Losses	-3.06	2.44	2.43	-2.27	-2.25	0.77	-11.33
22	2	EOC: EOC: Other PT Losses	-3.06	1.41	1.39	-2.42	-2.40	0.04	-9.77
23	0	EOC: EOC: Other PT Losses	-2.39	3.39	3.38	-1.55	-1.54	1.63	-11.07
23	1	EOC: EOC: Other PT Losses	-2.39	2.93	2.91	-1.62	-1.61	1.30	-10.38
23	2	EOC: EOC: Other PT Losses	-2.39	2.46	2.45	-1.69	-1.68	0.98	-9.68
24	0	EOC: EOC: Other PT Losses	-2.39	2.46	2.45	-1.69	-1.68	0.98	-9.68
24	1	EOC: EOC: Other PT Losses	-2.39	-0.65	-0.67	-2.15	-2.13	-1.19	-5.00
24	2	EOC: EOC: Other PT Losses	-2.39	-3.76	-3.78	-2.60	-2.59	-3.35	-0.32
25	0	EOC: EOC: Other PT Losses	-2.39	-3.76	-3.78	-2.60	-2.59	-3.35	-0.32
25	1	EOC: EOC: Other PT Losses	-2.39	-6.88	-6.90	-3.06	-3.04	-5.52	4.36
25	2	EOC: EOC: Other PT Losses	-2.39	-9.99	-10.01	-3.51	-3.50	-7.69	9.05
26	0	EOC: EOC: Other PT Losses	-2.39	-9.99	-10.01	-3.51	-3.50	-7.69	9.05
26	1	EOC: EOC: Other PT Losses	-2.39	-10.79	-10.81	-3.63	-3.61	-8.24	10.25
26	2	EOC: EOC: Other PT Losses	-2.39	-11.59	-11.61	-3.75	-3.73	-8.80	11.45
29	0	EOC: EOC: Other PT Losses	-3.23	-12.90	-13.00	-4.70	-4.60	-10.00	11.39
29	1	EOC: EOC: Other PT Losses	-3.23	-11.93	-12.03	-4.56	-4.46	-9.32	9.92
29	2	EOC: EOC: Other PT Losses	-3.23	-10.95	-11.05	-4.42	-4.32	-8.64	8.46
30	0	EOC: EOC: Other PT Losses	-3.23	-10.95	-11.05	-4.42	-4.32	-8.64	8.46
30	1	EOC: EOC: Other PT Losses	-3.23	-7.18	-7.27	-3.86	-3.77	-6.01	2.78
30	2	EOC: EOC: Other PT Losses	-3.23	-3.41	-3.49	-3.30	-3.22	-3.38	-2.90
31	0	EOC: EOC: Other PT Losses	-3.23	-3.41	-3.49	-3.30	-3.22	-3.38	-2.90
31	1	EOC: EOC: Other PT Losses	-3.23	0.36	0.29	-2.75	-2.67	-0.75	-8.58
31	2	EOC: EOC: Other PT Losses	-3.23	4.14	4.07	-2.19	-2.12	1.88	-14.25
32	0	EOC: EOC: Other PT Losses	-3.23	4.14	4.07	-2.19	-2.12	1.88	-14.25
32	1	EOC: EOC: Other PT Losses	-3.23	4.69	4.63	-2.11	-2.04	2.26	-15.09
32	2	EOC: EOC: Other PT Losses	-3.23	5.24	5.18	-2.03	-1.96	2.65	-15.92
33	0	EOC: EOC: Other PT Losses	-4.19	3.00	2.94	-3.18	-3.12	0.79	-14.96
33	1	EOC: EOC: Other PT Losses	-4.19	3.67	3.61	-3.08	-3.02	1.26	-15.97
33	2	EOC: EOC: Other PT Losses	-4.19	4.35	4.29	-2.98	-2.92	1.73	-16.99
34	0	EOC: EOC: Other PT Losses	-4.23	2.24	2.18	-3.32	-3.26	0.25	-13.91
34	1	EOC: EOC: Other PT Losses	-4.23	2.04	1.98	-3.35	-3.29	0.11	-13.62
34	2	EOC: EOC: Other PT Losses	-4.23	1.84	1.78	-3.38	-3.32	-0.02	-13.32

MEMBER STRESSES

DECK & CANOPY MEMBERS
EOC

(-) compression

			TEMPERATURE FALL (TU-)						
Member	Station	Result Case	(P/A) @ Centroid (kips/ft²)	Normal Stress @ Point 1 (kips/ft²)	Normal Stress @ Point 2 (kips/ft²)	Normal Stress @ Point 3 (kips/ft²)	Normal Stress @ Point 4 (kips/ft²)	Normal Stress @ Point 5 (kips/ft²)	Normal Stress @ Point 6 (kips/ft²)
35	0	EOC: EOC: Other PT Losses	-4.23	1.84	1.78	-3.38	-3.32	-0.02	-13.32
35	1	EOC: EOC: Other PT Losses	-4.23	1.23	1.18	-3.47	-3.41	-0.45	-12.41
35	2	EOC: EOC: Other PT Losses	-4.23	0.63	0.57	-3.55	-3.50	-0.87	-11.49
36	0	EOC: EOC: Other PT Losses	-4.23	0.63	0.57	-3.55	-3.50	-0.87	-11.49
36	1	EOC: EOC: Other PT Losses	-4.23	0.01	-0.04	-3.64	-3.59	-1.29	-10.58
36	2	EOC: EOC: Other PT Losses	-4.23	-0.60	-0.64	-3.73	-3.68	-1.72	-9.66
37	0	EOC: EOC: Other PT Losses	-4.23	-0.60	-0.64	-3.73	-3.68	-1.72	-9.66
37	1	EOC: EOC: Other PT Losses	-4.23	-0.91	-0.96	-3.77	-3.73	-1.94	-9.19
37	2	EOC: EOC: Other PT Losses	-4.23	-1.23	-1.27	-3.82	-3.77	-2.16	-8.72
38	0	EOC: EOC: Other PT Losses	-4.75	-1.97	-2.02	-4.37	-4.32	-2.83	-8.89
38	1	EOC: EOC: Other PT Losses	-4.75	-1.74	-1.78	-4.34	-4.29	-2.67	-9.25
38	2	EOC: EOC: Other PT Losses	-4.75	-1.50	-1.55	-4.30	-4.26	-2.50	-9.60
39	0	EOC: EOC: Other PT Losses	-4.68	-1.73	-1.77	-4.27	-4.23	-2.64	-9.08
39	1	EOC: EOC: Other PT Losses	-4.68	-1.64	-1.69	-4.26	-4.21	-2.58	-9.21
39	2	EOC: EOC: Other PT Losses	-4.68	-1.56	-1.60	-4.25	-4.20	-2.52	-9.34
40	0	EOC: EOC: Other PT Losses	-4.68	-1.56	-1.60	-4.25	-4.20	-2.52	-9.34
40	1	EOC: EOC: Other PT Losses	-4.68	-1.30	-1.34	-4.21	-4.17	-2.34	-9.73
40	2	EOC: EOC: Other PT Losses	-4.68	-1.04	-1.08	-4.17	-4.13	-2.16	-10.11
41	0	EOC: EOC: Other PT Losses	-4.68	-1.04	-1.08	-4.17	-4.13	-2.16	-10.11
41	1	EOC: EOC: Other PT Losses	-4.68	-0.78	-0.82	-4.13	-4.09	-1.98	-10.50
41	2	EOC: EOC: Other PT Losses	-4.68	-0.53	-0.56	-4.09	-4.06	-1.80	-10.89
42	0	EOC: EOC: Other PT Losses	-4.68	-0.53	-0.56	-4.09	-4.06	-1.80	-10.89
42	1	EOC: EOC: Other PT Losses	-4.68	-0.37	-0.40	-4.07	-4.03	-1.69	-11.13
42	2	EOC: EOC: Other PT Losses	-4.68	-0.21	-0.24	-4.04	-4.01	-1.58	-11.37
43	0	EOC: EOC: Other PT Losses	-4.29	0.54	0.51	-3.60	-3.57	-0.94	-11.54
43	1	EOC: EOC: Other PT Losses	-4.29	0.38	0.35	-3.63	-3.60	-1.05	-11.29
43	2	EOC: EOC: Other PT Losses	-4.29	0.21	0.18	-3.65	-3.62	-1.17	-11.04
44	0	EOC: EOC: Other PT Losses	-4.35	1.47	1.44	-3.52	-3.49	-0.31	-13.08
44	1	EOC: EOC: Other PT Losses	-4.35	1.54	1.51	-3.51	-3.48	-0.26	-13.19
44	2	EOC: EOC: Other PT Losses	-4.35	1.61	1.59	-3.50	-3.47	-0.21	-13.30
45	0	EOC: EOC: Other PT Losses	-4.35	1.61	1.59	-3.50	-3.47	-0.21	-13.30
45	1	EOC: EOC: Other PT Losses	-4.35	1.82	1.79	-3.46	-3.44	-0.07	-13.61
45	2	EOC: EOC: Other PT Losses	-4.35	2.02	2.00	-3.43	-3.41	0.08	-13.92
46	0	EOC: EOC: Other PT Losses	-4.35	2.02	2.00	-3.43	-3.41	0.08	-13.92
46	1	EOC: EOC: Other PT Losses	-4.35	2.23	2.21	-3.40	-3.38	0.22	-14.23
46	2	EOC: EOC: Other PT Losses	-4.35	2.43	2.41	-3.37	-3.35	0.36	-14.54
47	0	EOC: EOC: Other PT Losses	-4.35	2.43	2.41	-3.37	-3.35	0.36	-14.54
47	1	EOC: EOC: Other PT Losses	-4.35	2.58	2.56	-3.35	-3.33	0.47	-14.76
47	2	EOC: EOC: Other PT Losses	-4.35	2.72	2.71	-3.33	-3.31	0.57	-14.98
48	0	EOC: EOC: Other PT Losses	-2.86	5.68	5.66	-1.62	-1.61	3.08	-15.68
48	1	EOC: EOC: Other PT Losses	-2.86	5.06	5.04	-1.71	-1.70	2.64	-14.75
48	2	EOC: EOC: Other PT Losses	-2.86	4.44	4.42	-1.80	-1.79	2.21	-13.82
49	0	EOC: EOC: Other PT Losses	-3.15	7.69	7.67	-1.57	-1.56	4.39	-19.42
49	1	EOC: EOC: Other PT Losses	-3.15	7.13	7.12	-1.65	-1.64	4.00	-18.59
49	2	EOC: EOC: Other PT Losses	-3.15	6.58	6.56	-1.73	-1.72	3.62	-17.76
50	0	EOC: EOC: Other PT Losses	-3.15	6.58	6.56	-1.73	-1.72	3.62	-17.76
50	1	EOC: EOC: Other PT Losses	-3.15	5.11	5.10	-1.95	-1.94	2.60	-15.55
50	2	EOC: EOC: Other PT Losses	-3.15	3.64	3.64	-2.16	-2.15	1.58	-13.35

MEMBER STRESSES

DECK & CANOPY MEMBERS
EOC

(-) compression

			TEMPERATURE FALL (TU-)						
Member	Station	Result Case	(P/A) @ Centroid (kips/ft²)	Normal Stress @ Point 1 (kips/ft²)	Normal Stress @ Point 2 (kips/ft²)	Normal Stress @ Point 3 (kips/ft²)	Normal Stress @ Point 4 (kips/ft²)	Normal Stress @ Point 5 (kips/ft²)	Normal Stress @ Point 6 (kips/ft²)
51	0	EOC: EOC: Other PT Losses	-3.15	3.64	3.64	-2.16	-2.15	1.58	-13.35
51	1	EOC: EOC: Other PT Losses	-3.15	2.18	2.17	-2.37	-2.37	0.56	-11.15
51	2	EOC: EOC: Other PT Losses	-3.15	0.71	0.71	-2.59	-2.58	-0.46	-8.94
52	0	EOC: EOC: Other PT Losses	-3.15	0.71	0.71	-2.59	-2.58	-0.46	-8.94
52	1	EOC: EOC: Other PT Losses	-3.15	-0.46	-0.46	-2.75	-2.75	-1.27	-7.19
52	2	EOC: EOC: Other PT Losses	-3.15	-1.62	-1.62	-2.92	-2.92	-2.08	-5.44
60	0	EOC: EOC: Other PT Losses	0.00	0.00	0.00	0.00	0.00	0.00	0.00
60	1	EOC: EOC: Other PT Losses	0.00	0.00	0.00	0.00	0.00	0.00	0.00
60	2	EOC: EOC: Other PT Losses	0.00	0.00	0.00	0.00	0.00	0.00	0.00
101	0	EOC: EOC: Other PT Losses	0.00	0.00	0.00	0.00	0.00	0.00	0.00
101	1	EOC: EOC: Other PT Losses	0.00	0.00	0.00	0.00	0.00	0.00	0.00
101	2	EOC: EOC: Other PT Losses	0.00	0.00	0.00	0.00	0.00	0.00	0.00
102	0	EOC: EOC: Other PT Losses	0.00	0.00	0.00	0.00	0.00	0.00	0.00
102	1	EOC: EOC: Other PT Losses	0.00	0.00	0.00	0.00	0.00	0.00	0.00
102	2	EOC: EOC: Other PT Losses	0.00	0.00	0.00	0.00	0.00	0.00	0.00
103	0	EOC: EOC: Other PT Losses	0.00	0.00	0.00	0.00	0.00	0.00	0.00
103	1	EOC: EOC: Other PT Losses	0.00	0.00	0.00	0.00	0.00	0.00	0.00
103	2	EOC: EOC: Other PT Losses	0.00	0.00	0.00	0.00	0.00	0.00	0.00
104	0	EOC: EOC: Other PT Losses	0.00	0.00	0.00	0.00	0.00	0.00	0.00
104	1	EOC: EOC: Other PT Losses	0.00	0.00	0.00	0.00	0.00	0.00	0.00
104	2	EOC: EOC: Other PT Losses	0.00	0.00	0.00	0.00	0.00	0.00	0.00
106	0	EOC: EOC: Other PT Losses	4.08	-3.98	-3.98	12.93	12.93	-2.19	5.74
106	1	EOC: EOC: Other PT Losses	4.08	-3.38	-3.38	12.26	12.26	-1.72	5.61
106	2	EOC: EOC: Other PT Losses	4.08	-2.77	-2.77	11.60	11.60	-1.25	5.49
107	0	EOC: EOC: Other PT Losses	4.08	-2.77	-2.77	11.60	11.60	-1.25	5.49
107	1	EOC: EOC: Other PT Losses	4.08	0.75	0.75	7.73	7.73	1.49	4.76
107	2	EOC: EOC: Other PT Losses	4.08	4.27	4.27	3.86	3.86	4.23	4.04
108	0	EOC: EOC: Other PT Losses	4.08	4.27	4.27	3.86	3.86	4.23	4.04
108	1	EOC: EOC: Other PT Losses	4.08	7.64	7.63	0.17	0.17	6.84	3.34
108	2	EOC: EOC: Other PT Losses	4.08	11.00	11.00	-3.52	-3.52	9.45	2.65
109	0	EOC: EOC: Other PT Losses	4.08	11.00	11.00	-3.52	-3.52	9.45	2.65
109	1	EOC: EOC: Other PT Losses	4.08	12.21	12.20	-4.85	-4.85	10.39	2.40
109	2	EOC: EOC: Other PT Losses	4.08	13.41	13.41	-6.18	-6.17	11.33	2.15
111	0	EOC: EOC: Other PT Losses	4.91	8.03	8.02	1.50	1.50	7.33	4.27
111	1	EOC: EOC: Other PT Losses	4.91	7.93	7.93	1.60	1.61	7.26	4.29
111	2	EOC: EOC: Other PT Losses	4.91	7.83	7.83	1.71	1.71	7.18	4.31
112	0	EOC: EOC: Other PT Losses	4.91	7.83	7.83	1.71	1.71	7.18	4.31
112	1	EOC: EOC: Other PT Losses	4.91	7.43	7.42	2.16	2.16	6.86	4.40
112	2	EOC: EOC: Other PT Losses	4.91	7.02	7.01	2.61	2.61	6.55	4.48
113	0	EOC: EOC: Other PT Losses	4.91	7.02	7.01	2.61	2.61	6.55	4.48
113	1	EOC: EOC: Other PT Losses	4.91	6.57	6.57	3.09	3.10	6.20	4.57
113	2	EOC: EOC: Other PT Losses	4.91	6.13	6.12	3.58	3.59	5.86	4.66
114	0	EOC: EOC: Other PT Losses	4.91	6.13	6.12	3.58	3.59	5.86	4.66
114	1	EOC: EOC: Other PT Losses	4.91	6.03	6.02	3.69	3.70	5.78	4.69
114	2	EOC: EOC: Other PT Losses	4.91	5.93	5.92	3.80	3.80	5.70	4.71
116	0	EOC: EOC: Other PT Losses	3.09	7.15	7.15	-1.37	-1.37	6.25	2.25
116	1	EOC: EOC: Other PT Losses	3.09	6.94	6.94	-1.14	-1.14	6.08	2.30
116	2	EOC: EOC: Other PT Losses	3.09	6.73	6.73	-0.91	-0.91	5.92	2.34

MEMBER STRESSES

DECK & CANOPY MEMBERS
EOC

(-) compression

			TEMPERATURE FALL (TU-)						
Member	Station	Result Case	(P/A) @ Centroid (kips/ft²)	Normal Stress @ Point 1 (kips/ft²)	Normal Stress @ Point 2 (kips/ft²)	Normal Stress @ Point 3 (kips/ft²)	Normal Stress @ Point 4 (kips/ft²)	Normal Stress @ Point 5 (kips/ft²)	Normal Stress @ Point 6 (kips/ft²)
117	0	EOC: EOC: Other PT Losses	3.09	6.73	6.73	-0.91	-0.91	5.92	2.34
117	1	EOC: EOC: Other PT Losses	3.09	5.32	5.31	0.64	0.64	4.82	2.63
117	2	EOC: EOC: Other PT Losses	3.09	3.91	3.90	2.19	2.19	3.72	2.92
118	0	EOC: EOC: Other PT Losses	3.09	3.91	3.90	2.19	2.19	3.72	2.92
118	1	EOC: EOC: Other PT Losses	3.09	2.51	2.50	3.73	3.74	2.63	3.21
118	2	EOC: EOC: Other PT Losses	3.09	1.10	1.09	5.27	5.28	1.54	3.50
119	0	EOC: EOC: Other PT Losses	3.09	1.10	1.09	5.27	5.28	1.54	3.50
119	1	EOC: EOC: Other PT Losses	3.09	0.82	0.81	5.58	5.59	1.32	3.56
119	2	EOC: EOC: Other PT Losses	3.09	0.53	0.53	5.89	5.90	1.10	3.62
121	0	EOC: EOC: Other PT Losses	-3.00	4.11	4.10	-10.80	-10.80	2.52	-4.46
121	1	EOC: EOC: Other PT Losses	-3.00	3.67	3.67	-10.33	-10.32	2.18	-4.37
121	2	EOC: EOC: Other PT Losses	-3.00	3.24	3.23	-9.86	-9.85	1.85	-4.29
122	0	EOC: EOC: Other PT Losses	-3.00	3.24	3.23	-9.86	-9.85	1.85	-4.29
122	1	EOC: EOC: Other PT Losses	-3.00	0.26	0.25	-6.58	-6.57	-0.47	-3.67
122	2	EOC: EOC: Other PT Losses	-3.00	-2.72	-2.74	-3.30	-3.29	-2.79	-3.06
123	0	EOC: EOC: Other PT Losses	-3.00	-2.72	-2.74	-3.30	-3.29	-2.79	-3.06
123	1	EOC: EOC: Other PT Losses	-3.00	-5.71	-5.72	-0.03	-0.02	-5.11	-2.44
123	2	EOC: EOC: Other PT Losses	-3.00	-8.69	-8.71	3.25	3.26	-7.43	-1.83
124	0	EOC: EOC: Other PT Losses	-3.00	-8.69	-8.71	3.25	3.26	-7.43	-1.83
124	1	EOC: EOC: Other PT Losses	-3.00	-9.07	-9.08	3.66	3.67	-7.72	-1.75
124	2	EOC: EOC: Other PT Losses	-3.00	-9.45	-9.46	4.08	4.09	-8.02	-1.67
126	0	EOC: EOC: Other PT Losses	-20.22	-5.80	-5.81	-36.05	-36.04	-9.02	-23.19
126	1	EOC: EOC: Other PT Losses	-20.22	-7.47	-7.49	-34.21	-34.20	-10.32	-22.84
126	2	EOC: EOC: Other PT Losses	-20.22	-9.15	-9.16	-32.37	-32.36	-11.62	-22.50
127	0	EOC: EOC: Other PT Losses	-20.22	-9.15	-9.16	-32.37	-32.36	-11.62	-22.50
127	1	EOC: EOC: Other PT Losses	-20.22	-15.04	-15.05	-25.91	-25.89	-16.20	-21.28
127	2	EOC: EOC: Other PT Losses	-20.22	-20.93	-20.95	-19.44	-19.42	-20.78	-20.07
128	0	EOC: EOC: Other PT Losses	-20.22	-20.93	-20.95	-19.44	-19.42	-20.78	-20.07
128	1	EOC: EOC: Other PT Losses	-20.22	-26.96	-26.98	-12.81	-12.80	-25.47	-18.83
133	0	EOC: EOC: Other PT Losses	-19.23	-32.80	-32.83	-4.33	-4.31	-29.79	-16.44
133	1	EOC: EOC: Other PT Losses	-19.23	-27.08	-27.11	-10.61	-10.59	-25.34	-17.62
133	2	EOC: EOC: Other PT Losses	-19.23	-21.36	-21.38	-16.90	-16.88	-20.89	-18.79
134	0	EOC: EOC: Other PT Losses	-19.23	-21.36	-21.38	-16.90	-16.88	-20.89	-18.79
134	1	EOC: EOC: Other PT Losses	-19.23	-15.62	-15.64	-23.19	-23.18	-16.44	-19.97
134	2	EOC: EOC: Other PT Losses	-19.23	-9.89	-9.91	-29.49	-29.48	-11.98	-21.16
135	0	EOC: EOC: Other PT Losses	-19.23	-9.89	-9.91	-29.49	-29.48	-11.98	-21.16
135	1	EOC: EOC: Other PT Losses	-19.23	-8.44	-8.46	-31.09	-31.07	-10.85	-21.45
135	2	EOC: EOC: Other PT Losses	-19.23	-6.98	-7.00	-32.68	-32.66	-9.72	-21.75
137	0	EOC: EOC: Other PT Losses	-0.75	-13.36	-13.38	13.09	13.11	-10.56	1.84
137	1	EOC: EOC: Other PT Losses	-0.75	-11.65	-11.66	11.21	11.23	-9.23	1.49
137	2	EOC: EOC: Other PT Losses	-0.75	-9.93	-9.95	9.33	9.34	-7.89	1.14
138	0	EOC: EOC: Other PT Losses	-0.75	-9.93	-9.95	9.33	9.34	-7.89	1.14
138	1	EOC: EOC: Other PT Losses	-0.75	-4.80	-4.81	3.69	3.70	-3.90	0.08
138	2	EOC: EOC: Other PT Losses	-0.75	0.34	0.32	-1.95	-1.93	0.09	-0.98
139	0	EOC: EOC: Other PT Losses	-0.75	0.34	0.32	-1.95	-1.93	0.09	-0.98
139	1	EOC: EOC: Other PT Losses	-0.75	5.82	5.80	-7.96	-7.95	4.35	-2.10
139	2	EOC: EOC: Other PT Losses	-0.75	11.30	11.28	-13.98	-13.96	8.60	-3.23

MEMBER STRESSES

DECK & CANOPY MEMBERS
EOC

(-) compression

			TEMPERATURE FALL (TU-)						
Member	Station	Result Case	(P/A) @ Centroid (kips/ft²)	Normal Stress @ Point 1 (kips/ft²)	Normal Stress @ Point 2 (kips/ft²)	Normal Stress @ Point 3 (kips/ft²)	Normal Stress @ Point 4 (kips/ft²)	Normal Stress @ Point 5 (kips/ft²)	Normal Stress @ Point 6 (kips/ft²)
140	0	EOC: EOC: Other PT Losses	-0.75	11.30	11.28	-13.98	-13.96	8.61	-3.23
140	1	EOC: EOC: Other PT Losses	-0.75	12.76	12.75	-15.59	-15.57	9.74	-3.53
140	2	EOC: EOC: Other PT Losses	-0.75	14.23	14.21	-17.20	-17.18	10.88	-3.83
142	0	EOC: EOC: Other PT Losses	3.27	1.11	1.10	5.63	5.65	1.59	3.71
142	1	EOC: EOC: Other PT Losses	3.27	2.10	2.08	4.55	4.57	2.35	3.51
142	2	EOC: EOC: Other PT Losses	3.27	3.08	3.07	3.47	3.48	3.12	3.31
143	0	EOC: EOC: Other PT Losses	3.27	3.08	3.07	3.47	3.48	3.12	3.31
143	1	EOC: EOC: Other PT Losses	3.27	5.05	5.04	1.31	1.32	4.65	2.90
143	2	EOC: EOC: Other PT Losses	3.27	7.03	7.01	-0.86	-0.85	6.18	2.49
144	0	EOC: EOC: Other PT Losses	3.27	7.03	7.01	-0.86	-0.85	6.18	2.49
144	1	EOC: EOC: Other PT Losses	3.27	9.20	9.19	-3.25	-3.24	7.87	2.05
144	2	EOC: EOC: Other PT Losses	3.27	11.38	11.37	-5.64	-5.63	9.57	1.60
145	0	EOC: EOC: Other PT Losses	3.27	11.38	11.37	-5.64	-5.63	9.57	1.60
145	1	EOC: EOC: Other PT Losses	3.27	11.93	11.92	-6.25	-6.24	10.00	1.48
145	2	EOC: EOC: Other PT Losses	3.27	12.49	12.48	-6.86	-6.85	10.43	1.37
147	0	EOC: EOC: Other PT Losses	4.50	10.52	10.51	-2.11	-2.10	9.17	3.26
147	1	EOC: EOC: Other PT Losses	4.50	10.42	10.40	-2.00	-1.99	9.09	3.28
147	2	EOC: EOC: Other PT Losses	4.50	10.31	10.30	-1.88	-1.87	9.01	3.30
148	0	EOC: EOC: Other PT Losses	4.50	10.31	10.30	-1.88	-1.87	9.01	3.30
148	1	EOC: EOC: Other PT Losses	4.50	10.10	10.09	-1.64	-1.63	8.84	3.35
148	2	EOC: EOC: Other PT Losses	4.50	9.88	9.87	-1.40	-1.40	8.67	3.39
149	0	EOC: EOC: Other PT Losses	4.50	9.88	9.87	-1.40	-1.40	8.67	3.39
149	1	EOC: EOC: Other PT Losses	4.50	9.69	9.68	-1.20	-1.19	8.53	3.43
149	2	EOC: EOC: Other PT Losses	4.50	9.50	9.49	-0.99	-0.98	8.38	3.47
150	0	EOC: EOC: Other PT Losses	4.50	9.50	9.49	-0.99	-0.98	8.38	3.47
150	1	EOC: EOC: Other PT Losses	4.50	9.40	9.39	-0.88	-0.88	8.31	3.49
150	2	EOC: EOC: Other PT Losses	4.50	9.30	9.29	-0.77	-0.77	8.23	3.51
152	0	EOC: EOC: Other PT Losses	3.84	22.08	22.07	-16.19	-16.18	18.01	0.08
152	1	EOC: EOC: Other PT Losses	3.84	19.23	19.22	-13.06	-13.05	15.80	0.67
152	2	EOC: EOC: Other PT Losses	3.84	16.38	16.37	-9.93	-9.92	13.58	1.26
153	0	EOC: EOC: Other PT Losses	3.84	16.38	16.37	-9.93	-9.92	13.58	1.26
153	1	EOC: EOC: Other PT Losses	3.84	11.72	11.71	-4.82	-4.81	9.96	2.22
153	2	EOC: EOC: Other PT Losses	3.84	7.06	7.06	0.30	0.30	6.34	3.18
154	0	EOC: EOC: Other PT Losses	3.84	7.06	7.06	0.30	0.30	6.34	3.18
154	1	EOC: EOC: Other PT Losses	3.84	2.01	2.00	5.85	5.86	2.41	4.22
154	2	EOC: EOC: Other PT Losses	3.84	-3.05	-3.05	11.40	11.41	-1.52	5.26
155	0	EOC: EOC: Other PT Losses	3.84	-3.05	-3.06	11.40	11.40	-1.52	5.26
155	1	EOC: EOC: Other PT Losses	3.84	-4.63	-4.64	13.14	13.14	-2.75	5.58
155	2	EOC: EOC: Other PT Losses	3.84	-6.22	-6.22	14.88	14.88	-3.98	5.91
157	0	EOC: EOC: Other PT Losses	0.94	17.51	17.50	-17.25	-17.25	13.81	-2.47
157	1	EOC: EOC: Other PT Losses	0.94	14.97	14.96	-14.46	-14.46	11.84	-1.95
157	2	EOC: EOC: Other PT Losses	0.94	12.43	12.43	-11.68	-11.67	9.87	-1.43
158	0	EOC: EOC: Other PT Losses	0.94	12.43	12.43	-11.68	-11.67	9.87	-1.43
158	1	EOC: EOC: Other PT Losses	0.94	4.30	4.30	-2.75	-2.75	3.55	0.25
158	2	EOC: EOC: Other PT Losses	0.94	-3.83	-3.83	6.18	6.18	-2.77	1.92
159	0	EOC: EOC: Other PT Losses	0.94	-3.83	-3.83	6.18	6.18	-2.77	1.92
159	1	EOC: EOC: Other PT Losses	0.94	-12.07	-12.08	15.23	15.23	-9.18	3.62
159	2	EOC: EOC: Other PT Losses	0.94	-20.32	-20.32	24.28	24.28	-15.58	5.32

MEMBER STRESSES

DECK & CANOPY MEMBERS
EOC

(-) compression

			TU(+) + TEMP. DIFF.						
Member	Station	Result Case	(P/A) @ Centroid (kips/ft²)	Normal Stress @ Point 1 (kips/ft²)	Normal Stress @ Point 2 (kips/ft²)	Normal Stress @ Point 3 (kips/ft²)	Normal Stress @ Point 4 (kips/ft²)	Normal Stress @ Point 5 (kips/ft²)	Normal Stress @ Point 6 (kips/ft²)
1	0	EOC: EOC: Other PT Losses	0.00	0.00	0.00	0.00	0.00	0.00	0.00
1	1	EOC: EOC: Other PT Losses	0.00	0.00	0.00	0.00	0.00	0.00	0.00
1	2	EOC: EOC: Other PT Losses	0.00	0.00	0.00	0.00	0.00	0.00	0.00
2	0	EOC: EOC: Other PT Losses	-0.50	5.50	5.50	0.38	0.38	3.67	-9.52
2	1	EOC: EOC: Other PT Losses	-0.50	0.94	0.95	-0.29	-0.29	0.51	-2.67
2	2	EOC: EOC: Other PT Losses	-0.50	-3.61	-3.60	-0.95	-0.96	-2.66	4.17
3	0	EOC: EOC: Other PT Losses	6.28	4.88	4.88	6.08	6.08	5.31	8.39
3	1	EOC: EOC: Other PT Losses	6.28	4.49	4.50	6.02	6.02	5.04	8.97
3	2	EOC: EOC: Other PT Losses	6.28	4.10	4.11	5.97	5.96	4.77	9.55
4	0	EOC: EOC: Other PT Losses	6.28	4.10	4.11	5.97	5.96	4.77	9.55
4	1	EOC: EOC: Other PT Losses	6.28	3.28	3.28	5.85	5.84	4.19	10.80
4	2	EOC: EOC: Other PT Losses	6.28	2.45	2.46	5.73	5.72	3.62	12.04
5	0	EOC: EOC: Other PT Losses	6.28	2.45	2.46	5.73	5.72	3.62	12.04
5	1	EOC: EOC: Other PT Losses	6.28	1.62	1.63	5.61	5.60	3.04	13.28
5	2	EOC: EOC: Other PT Losses	6.28	0.80	0.81	5.49	5.48	2.47	14.52
6	0	EOC: EOC: Other PT Losses	6.28	0.80	0.81	5.49	5.48	2.47	14.52
6	1	EOC: EOC: Other PT Losses	6.28	0.69	0.70	5.47	5.46	2.39	14.69
6	2	EOC: EOC: Other PT Losses	6.28	0.58	0.59	5.45	5.44	2.31	14.85
7	0	EOC: EOC: Other PT Losses	6.00	4.23	4.24	5.74	5.73	4.77	8.64
7	1	EOC: EOC: Other PT Losses	6.00	2.72	2.73	5.52	5.51	3.72	10.91
7	2	EOC: EOC: Other PT Losses	6.00	1.21	1.22	5.30	5.29	2.67	13.19
8	0	EOC: EOC: Other PT Losses	8.63	4.56	4.57	8.04	8.03	5.80	14.74
8	1	EOC: EOC: Other PT Losses	8.63	4.47	4.48	8.03	8.02	5.74	14.87
8	2	EOC: EOC: Other PT Losses	8.63	4.38	4.39	8.01	8.00	5.68	15.01
9	0	EOC: EOC: Other PT Losses	8.63	4.38	4.39	8.01	8.00	5.68	15.01
9	1	EOC: EOC: Other PT Losses	8.63	4.15	4.17	7.98	7.97	5.52	15.35
9	2	EOC: EOC: Other PT Losses	8.63	3.92	3.94	7.95	7.93	5.36	15.69
10	0	EOC: EOC: Other PT Losses	8.63	3.92	3.94	7.95	7.93	5.36	15.69
10	1	EOC: EOC: Other PT Losses	8.63	3.70	3.71	7.92	7.90	5.20	16.03
10	2	EOC: EOC: Other PT Losses	8.63	3.47	3.49	7.88	7.87	5.04	16.37
11	0	EOC: EOC: Other PT Losses	8.63	3.47	3.49	7.88	7.87	5.04	16.37
11	1	EOC: EOC: Other PT Losses	8.63	3.44	3.46	7.88	7.86	5.02	16.42
11	2	EOC: EOC: Other PT Losses	8.63	3.41	3.43	7.88	7.86	5.00	16.46
12	0	EOC: EOC: Other PT Losses	8.68	4.81	4.83	8.13	8.11	5.99	14.49
12	1	EOC: EOC: Other PT Losses	8.68	4.71	4.73	8.11	8.09	5.92	14.64
12	2	EOC: EOC: Other PT Losses	8.68	4.60	4.62	8.10	8.08	5.85	14.80
13	0	EOC: EOC: Other PT Losses	8.88	5.12	5.14	8.34	8.32	6.27	14.52
13	1	EOC: EOC: Other PT Losses	8.88	5.26	5.28	8.36	8.34	6.37	14.30
13	2	EOC: EOC: Other PT Losses	8.88	5.41	5.42	8.38	8.36	6.47	14.09
14	0	EOC: EOC: Other PT Losses	8.88	5.41	5.42	8.38	8.36	6.47	14.09
14	1	EOC: EOC: Other PT Losses	8.88	5.86	5.88	8.45	8.43	6.78	13.40
14	2	EOC: EOC: Other PT Losses	8.88	6.31	6.33	8.52	8.49	7.10	12.72
15	0	EOC: EOC: Other PT Losses	8.88	6.31	6.33	8.52	8.49	7.10	12.72
15	1	EOC: EOC: Other PT Losses	8.88	6.76	6.78	8.58	8.56	7.41	12.04
15	2	EOC: EOC: Other PT Losses	8.88	7.21	7.24	8.65	8.62	7.73	11.37
16	0	EOC: EOC: Other PT Losses	8.88	7.21	7.24	8.65	8.62	7.73	11.37
16	1	EOC: EOC: Other PT Losses	8.88	7.26	7.29	8.66	8.63	7.76	11.29
16	2	EOC: EOC: Other PT Losses	8.88	7.32	7.34	8.66	8.64	7.80	11.21

MEMBER STRESSES

DECK & CANOPY MEMBERS
EOC

(-) compression

			TU(+) + TEMP. DIFF.						
Member	Station	Result Case	(P/A) @ Centroid (kips/ft²)	Normal Stress @ Point 1 (kips/ft²)	Normal Stress @ Point 2 (kips/ft²)	Normal Stress @ Point 3 (kips/ft²)	Normal Stress @ Point 4 (kips/ft²)	Normal Stress @ Point 5 (kips/ft²)	Normal Stress @ Point 6 (kips/ft²)
17	0	EOC: EOC: Other PT Losses	8.53	6.52	6.54	8.25	8.23	7.14	11.53
17	1	EOC: EOC: Other PT Losses	8.53	7.58	7.61	8.41	8.38	7.88	9.93
17	2	EOC: EOC: Other PT Losses	8.53	8.65	8.67	8.56	8.54	8.62	8.33
18	0	EOC: EOC: Other PT Losses	7.20	7.44	7.46	7.25	7.23	7.37	6.84
18	1	EOC: EOC: Other PT Losses	7.20	7.06	7.08	7.20	7.17	7.11	7.40
18	2	EOC: EOC: Other PT Losses	7.20	6.68	6.71	7.14	7.12	6.85	7.97
19	0	EOC: EOC: Other PT Losses	7.20	6.68	6.71	7.14	7.12	6.85	7.97
19	1	EOC: EOC: Other PT Losses	7.20	5.08	5.10	6.91	6.88	5.73	10.38
19	2	EOC: EOC: Other PT Losses	7.20	3.47	3.50	6.67	6.65	4.62	12.80
20	0	EOC: EOC: Other PT Losses	7.20	3.47	3.50	6.67	6.65	4.62	12.80
20	1	EOC: EOC: Other PT Losses	7.20	1.86	1.89	6.44	6.41	3.50	15.21
20	2	EOC: EOC: Other PT Losses	7.20	0.26	0.29	6.21	6.17	2.38	17.62
21	0	EOC: EOC: Other PT Losses	7.20	0.26	0.29	6.21	6.17	2.38	17.62
21	1	EOC: EOC: Other PT Losses	7.20	-0.03	0.01	6.16	6.13	2.18	18.05
21	2	EOC: EOC: Other PT Losses	7.20	-0.31	-0.28	6.12	6.09	1.99	18.47
22	0	EOC: EOC: Other PT Losses	5.39	-3.55	-3.52	4.10	4.07	-0.82	18.82
22	1	EOC: EOC: Other PT Losses	5.39	-1.41	-1.38	4.42	4.38	0.67	15.60
22	2	EOC: EOC: Other PT Losses	5.39	0.73	0.76	4.73	4.70	2.16	12.38
23	0	EOC: EOC: Other PT Losses	3.95	-3.08	-3.05	2.94	2.91	-0.93	14.49
23	1	EOC: EOC: Other PT Losses	3.95	-2.45	-2.41	3.03	3.00	-0.49	13.53
23	2	EOC: EOC: Other PT Losses	3.95	-1.81	-1.78	3.12	3.09	-0.05	12.58
24	0	EOC: EOC: Other PT Losses	3.95	-1.81	-1.78	3.12	3.09	-0.05	12.58
24	1	EOC: EOC: Other PT Losses	3.95	2.45	2.48	3.75	3.71	2.92	6.17
24	2	EOC: EOC: Other PT Losses	3.95	6.71	6.74	4.37	4.34	5.88	-0.23
25	0	EOC: EOC: Other PT Losses	3.95	6.71	6.74	4.37	4.34	5.88	-0.23
25	1	EOC: EOC: Other PT Losses	3.95	10.97	11.01	5.00	4.96	8.85	-6.64
25	2	EOC: EOC: Other PT Losses	3.95	15.23	15.27	5.62	5.58	11.82	-13.05
26	0	EOC: EOC: Other PT Losses	3.95	15.23	15.27	5.62	5.58	11.82	-13.05
26	1	EOC: EOC: Other PT Losses	3.95	16.33	16.37	5.78	5.74	12.58	-14.69
26	2	EOC: EOC: Other PT Losses	3.95	17.42	17.46	5.94	5.90	13.34	-16.34
29	0	EOC: EOC: Other PT Losses	5.78	21.39	21.60	8.18	7.97	16.72	-17.85
29	1	EOC: EOC: Other PT Losses	5.78	19.90	20.10	7.96	7.76	15.68	-15.60
29	2	EOC: EOC: Other PT Losses	5.78	18.40	18.60	7.74	7.54	14.63	-13.34
30	0	EOC: EOC: Other PT Losses	5.78	18.40	18.60	7.74	7.54	14.63	-13.34
30	1	EOC: EOC: Other PT Losses	5.78	12.60	12.79	6.88	6.70	10.59	-4.62
30	2	EOC: EOC: Other PT Losses	5.78	6.81	6.98	6.03	5.86	6.56	4.10
31	0	EOC: EOC: Other PT Losses	5.78	6.81	6.98	6.03	5.86	6.56	4.10
31	1	EOC: EOC: Other PT Losses	5.78	1.02	1.17	5.17	5.02	2.52	12.83
31	2	EOC: EOC: Other PT Losses	5.78	-4.78	-4.65	4.31	4.18	-1.52	21.55
32	0	EOC: EOC: Other PT Losses	5.78	-4.78	-4.65	4.31	4.18	-1.52	21.55
32	1	EOC: EOC: Other PT Losses	5.78	-5.63	-5.50	4.19	4.06	-2.11	22.83
32	2	EOC: EOC: Other PT Losses	5.78	-6.48	-6.35	4.06	3.93	-2.71	24.11
33	0	EOC: EOC: Other PT Losses	7.79	-1.94	-1.81	6.44	6.31	1.06	22.31
33	1	EOC: EOC: Other PT Losses	7.79	-3.30	-3.18	6.24	6.11	0.11	24.37
33	2	EOC: EOC: Other PT Losses	7.79	-4.67	-4.54	6.04	5.91	-0.84	26.42
34	0	EOC: EOC: Other PT Losses	7.86	-0.69	-0.57	6.68	6.56	1.95	20.63
34	1	EOC: EOC: Other PT Losses	7.86	-0.52	-0.40	6.71	6.58	2.07	20.37
34	2	EOC: EOC: Other PT Losses	7.86	-0.35	-0.23	6.73	6.61	2.19	20.11

MEMBER STRESSES

DECK & CANOPY MEMBERS
EOC

(-) compression

			TU(+) + TEMP. DIFF.						
Member	Station	Result Case	(P/A) @ Centroid (kips/ft²)	Normal Stress @ Point 1 (kips/ft²)	Normal Stress @ Point 2 (kips/ft²)	Normal Stress @ Point 3 (kips/ft²)	Normal Stress @ Point 4 (kips/ft²)	Normal Stress @ Point 5 (kips/ft²)	Normal Stress @ Point 6 (kips/ft²)
35	0	EOC: EOC: Other PT Losses	7.86	-0.35	-0.23	6.73	6.61	2.19	20.11
35	1	EOC: EOC: Other PT Losses	7.86	0.18	0.29	6.80	6.69	2.55	19.32
35	2	EOC: EOC: Other PT Losses	7.86	0.71	0.82	6.88	6.77	2.92	18.53
36	0	EOC: EOC: Other PT Losses	7.86	0.71	0.82	6.88	6.77	2.92	18.53
36	1	EOC: EOC: Other PT Losses	7.86	1.24	1.34	6.95	6.85	3.29	17.74
36	2	EOC: EOC: Other PT Losses	7.86	1.77	1.87	7.03	6.93	3.65	16.95
37	0	EOC: EOC: Other PT Losses	7.86	1.77	1.87	7.03	6.93	3.65	16.95
37	1	EOC: EOC: Other PT Losses	7.86	2.04	2.14	7.07	6.97	3.84	16.54
37	2	EOC: EOC: Other PT Losses	7.86	2.32	2.41	7.10	7.01	4.03	16.13
38	0	EOC: EOC: Other PT Losses	9.19	4.39	4.48	8.54	8.45	5.88	16.34
38	1	EOC: EOC: Other PT Losses	9.19	3.72	3.82	8.44	8.35	5.42	17.34
38	2	EOC: EOC: Other PT Losses	9.19	3.06	3.15	8.35	8.25	4.95	18.34
39	0	EOC: EOC: Other PT Losses	9.00	4.13	4.22	8.34	8.25	5.64	16.25
39	1	EOC: EOC: Other PT Losses	9.00	3.89	3.98	8.31	8.21	5.47	16.62
39	2	EOC: EOC: Other PT Losses	9.00	3.64	3.73	8.27	8.18	5.30	16.99
40	0	EOC: EOC: Other PT Losses	9.00	3.64	3.73	8.27	8.18	5.30	16.99
40	1	EOC: EOC: Other PT Losses	9.00	2.92	3.00	8.16	8.08	4.80	18.08
40	2	EOC: EOC: Other PT Losses	9.00	2.19	2.27	8.05	7.97	4.29	19.17
41	0	EOC: EOC: Other PT Losses	9.00	2.19	2.27	8.05	7.97	4.29	19.17
41	1	EOC: EOC: Other PT Losses	9.00	1.47	1.54	7.94	7.87	3.78	20.27
41	2	EOC: EOC: Other PT Losses	9.00	0.74	0.81	7.83	7.76	3.28	21.37
42	0	EOC: EOC: Other PT Losses	9.00	0.74	0.81	7.83	7.76	3.28	21.37
42	1	EOC: EOC: Other PT Losses	9.00	0.29	0.36	7.77	7.70	2.96	22.04
42	2	EOC: EOC: Other PT Losses	9.00	-0.16	-0.10	7.70	7.63	2.65	22.72
43	0	EOC: EOC: Other PT Losses	8.68	-0.88	-0.81	7.31	7.25	2.05	22.99
43	1	EOC: EOC: Other PT Losses	8.68	-0.77	-0.71	7.33	7.27	2.12	22.83
43	2	EOC: EOC: Other PT Losses	8.68	-0.66	-0.60	7.35	7.28	2.20	22.66
44	0	EOC: EOC: Other PT Losses	8.69	-2.54	-2.48	7.09	7.02	0.90	25.53
44	1	EOC: EOC: Other PT Losses	8.69	-2.78	-2.72	7.05	6.99	0.73	25.89
44	2	EOC: EOC: Other PT Losses	8.69	-3.01	-2.95	7.02	6.96	0.57	26.25
45	0	EOC: EOC: Other PT Losses	8.69	-3.01	-2.95	7.02	6.96	0.57	26.25
45	1	EOC: EOC: Other PT Losses	8.69	-3.67	-3.62	6.92	6.86	0.11	27.24
45	2	EOC: EOC: Other PT Losses	8.69	-4.33	-4.28	6.82	6.77	-0.36	28.24
46	0	EOC: EOC: Other PT Losses	8.69	-4.33	-4.28	6.82	6.77	-0.36	28.24
46	1	EOC: EOC: Other PT Losses	8.69	-4.99	-4.95	6.72	6.67	-0.82	29.23
46	2	EOC: EOC: Other PT Losses	8.69	-5.65	-5.61	6.62	6.58	-1.28	30.23
47	0	EOC: EOC: Other PT Losses	8.69	-5.65	-5.61	6.62	6.58	-1.28	30.23
47	1	EOC: EOC: Other PT Losses	8.69	-6.12	-6.08	6.55	6.51	-1.60	30.94
47	2	EOC: EOC: Other PT Losses	8.69	-6.59	-6.56	6.48	6.45	-1.93	31.65
48	0	EOC: EOC: Other PT Losses	6.04	-11.92	-11.89	3.43	3.40	-6.45	33.00
48	1	EOC: EOC: Other PT Losses	6.04	-10.83	-10.80	3.59	3.55	-5.70	31.37
48	2	EOC: EOC: Other PT Losses	6.04	-9.75	-9.72	3.75	3.71	-4.94	29.74
49	0	EOC: EOC: Other PT Losses	6.51	-15.92	-15.88	3.25	3.22	-9.09	40.20
49	1	EOC: EOC: Other PT Losses	6.51	-14.88	-14.86	3.40	3.37	-8.37	38.65
49	2	EOC: EOC: Other PT Losses	6.51	-13.85	-13.83	3.55	3.52	-7.65	37.10
50	0	EOC: EOC: Other PT Losses	6.51	-13.85	-13.83	3.55	3.52	-7.65	37.10
50	1	EOC: EOC: Other PT Losses	6.51	-11.13	-11.10	3.95	3.92	-5.76	33.01
50	2	EOC: EOC: Other PT Losses	6.51	-8.40	-8.38	4.34	4.32	-3.86	28.92

MEMBER STRESSES

DECK & CANOPY MEMBERS
EOC

(-) compression

			TU(+) + TEMP. DIFF.						
Member	Station	Result Case	(P/A) @ Centroid (kips/ft²)	Normal Stress @ Point 1 (kips/ft²)	Normal Stress @ Point 2 (kips/ft²)	Normal Stress @ Point 3 (kips/ft²)	Normal Stress @ Point 4 (kips/ft²)	Normal Stress @ Point 5 (kips/ft²)	Normal Stress @ Point 6 (kips/ft²)
51	0	EOC: EOC: Other PT Losses	6.51	-8.40	-8.38	4.34	4.32	-3.86	28.92
51	1	EOC: EOC: Other PT Losses	6.51	-5.68	-5.66	4.74	4.72	-1.97	24.82
51	2	EOC: EOC: Other PT Losses	6.51	-2.95	-2.94	5.13	5.12	-0.07	20.73
52	0	EOC: EOC: Other PT Losses	6.51	-2.95	-2.94	5.13	5.12	-0.07	20.73
52	1	EOC: EOC: Other PT Losses	6.51	-0.79	-0.78	5.45	5.44	1.43	17.48
52	2	EOC: EOC: Other PT Losses	6.51	1.38	1.38	5.76	5.76	2.94	14.23
60	0	EOC: EOC: Other PT Losses	0.00	0.00	0.00	0.00	0.00	0.00	0.00
60	1	EOC: EOC: Other PT Losses	0.00	0.00	0.00	0.00	0.00	0.00	0.00
60	2	EOC: EOC: Other PT Losses	0.00	0.00	0.00	0.00	0.00	0.00	0.00
101	0	EOC: EOC: Other PT Losses	0.00	0.00	0.00	0.00	0.00	0.00	0.00
101	1	EOC: EOC: Other PT Losses	0.00	0.00	0.00	0.00	0.00	0.00	0.00
101	2	EOC: EOC: Other PT Losses	0.00	0.00	0.00	0.00	0.00	0.00	0.00
102	0	EOC: EOC: Other PT Losses	0.00	0.00	0.00	0.00	0.00	0.00	0.00
102	1	EOC: EOC: Other PT Losses	0.00	0.00	0.00	0.00	0.00	0.00	0.00
102	2	EOC: EOC: Other PT Losses	0.00	0.00	0.00	0.00	0.00	0.00	0.00
103	0	EOC: EOC: Other PT Losses	0.00	0.00	0.00	0.00	0.00	0.00	0.00
103	1	EOC: EOC: Other PT Losses	0.00	0.00	0.00	0.00	0.00	0.00	0.00
103	2	EOC: EOC: Other PT Losses	0.00	0.00	0.00	0.00	0.00	0.00	0.00
104	0	EOC: EOC: Other PT Losses	0.00	0.00	0.00	0.00	0.00	0.00	0.00
104	1	EOC: EOC: Other PT Losses	0.00	0.00	0.00	0.00	0.00	0.00	0.00
104	2	EOC: EOC: Other PT Losses	0.00	0.00	0.00	0.00	0.00	0.00	0.00
106	0	EOC: EOC: Other PT Losses	-7.55	7.93	7.93	-24.55	-24.55	4.48	-10.74
106	1	EOC: EOC: Other PT Losses	-7.55	6.79	6.79	-23.29	-23.29	3.59	-10.50
106	2	EOC: EOC: Other PT Losses	-7.55	5.64	5.64	-22.03	-22.03	2.70	-10.27
107	0	EOC: EOC: Other PT Losses	-7.55	5.64	5.64	-22.03	-22.03	2.70	-10.27
107	1	EOC: EOC: Other PT Losses	-7.55	-1.03	-1.03	-14.71	-14.72	-2.48	-8.89
107	2	EOC: EOC: Other PT Losses	-7.55	-7.70	-7.69	-7.39	-7.40	-7.66	-7.52
108	0	EOC: EOC: Other PT Losses	-7.55	-7.70	-7.69	-7.39	-7.40	-7.66	-7.52
108	1	EOC: EOC: Other PT Losses	-7.55	-14.06	-14.06	-0.40	-0.41	-12.61	-6.21
108	2	EOC: EOC: Other PT Losses	-7.55	-20.43	-20.42	6.58	6.58	-17.56	-4.90
109	0	EOC: EOC: Other PT Losses	-7.55	-20.43	-20.42	6.59	6.58	-17.56	-4.90
109	1	EOC: EOC: Other PT Losses	-7.55	-22.71	-22.71	9.09	9.09	-19.33	-4.43
109	2	EOC: EOC: Other PT Losses	-7.55	-25.00	-24.99	11.60	11.60	-21.11	-3.96
111	0	EOC: EOC: Other PT Losses	-7.70	-15.48	-15.48	0.85	0.85	-13.75	-6.09
111	1	EOC: EOC: Other PT Losses	-7.70	-15.17	-15.17	0.51	0.51	-13.51	-6.16
111	2	EOC: EOC: Other PT Losses	-7.70	-14.87	-14.86	0.18	0.17	-13.27	-6.22
112	0	EOC: EOC: Other PT Losses	-7.70	-14.87	-14.86	0.18	0.17	-13.27	-6.22
112	1	EOC: EOC: Other PT Losses	-7.70	-13.25	-13.24	-1.60	-1.61	-12.01	-6.55
112	2	EOC: EOC: Other PT Losses	-7.70	-11.63	-11.62	-3.38	-3.39	-10.75	-6.89
113	0	EOC: EOC: Other PT Losses	-7.70	-11.63	-11.62	-3.38	-3.39	-10.75	-6.89
113	1	EOC: EOC: Other PT Losses	-7.70	-9.98	-9.97	-5.19	-5.20	-9.47	-7.23
113	2	EOC: EOC: Other PT Losses	-7.70	-8.33	-8.32	-7.00	-7.01	-8.19	-7.57
114	0	EOC: EOC: Other PT Losses	-7.70	-8.33	-8.32	-7.00	-7.01	-8.19	-7.57
114	1	EOC: EOC: Other PT Losses	-7.70	-7.90	-7.89	-7.47	-7.48	-7.85	-7.65
114	2	EOC: EOC: Other PT Losses	-7.70	-7.47	-7.46	-7.94	-7.95	-7.52	-7.74
116	0	EOC: EOC: Other PT Losses	-2.29	-10.77	-10.76	7.01	7.00	-8.87	-0.55
116	1	EOC: EOC: Other PT Losses	-2.29	-10.31	-10.30	6.51	6.50	-8.52	-0.64
116	2	EOC: EOC: Other PT Losses	-2.29	-9.86	-9.85	6.01	6.00	-8.17	-0.74

MEMBER STRESSES

DECK & CANOPY MEMBERS
EOC

(-) compression

			TU(+) + TEMP. DIFF.						
Member	Station	Result Case	(P/A) @ Centroid (kips/ft²)	Normal Stress @ Point 1 (kips/ft²)	Normal Stress @ Point 2 (kips/ft²)	Normal Stress @ Point 3 (kips/ft²)	Normal Stress @ Point 4 (kips/ft²)	Normal Stress @ Point 5 (kips/ft²)	Normal Stress @ Point 6 (kips/ft²)
117	0	EOC: EOC: Other PT Losses	-2.29	-9.86	-9.85	6.01	6.00	-8.17	-0.74
117	1	EOC: EOC: Other PT Losses	-2.29	-6.64	-6.63	2.48	2.47	-5.67	-1.40
117	2	EOC: EOC: Other PT Losses	-2.29	-3.43	-3.41	-1.05	-1.06	-3.17	-2.06
118	0	EOC: EOC: Other PT Losses	-2.29	-3.43	-3.41	-1.05	-1.06	-3.17	-2.06
118	1	EOC: EOC: Other PT Losses	-2.29	-0.27	-0.25	-4.52	-4.53	-0.71	-2.71
118	2	EOC: EOC: Other PT Losses	-2.29	2.89	2.91	-7.99	-8.00	1.74	-3.36
119	0	EOC: EOC: Other PT Losses	-2.29	2.89	2.91	-7.99	-8.00	1.74	-3.36
119	1	EOC: EOC: Other PT Losses	-2.29	3.55	3.57	-8.71	-8.73	2.25	-3.50
119	2	EOC: EOC: Other PT Losses	-2.29	4.21	4.23	-9.44	-9.45	2.77	-3.63
121	0	EOC: EOC: Other PT Losses	9.95	-1.07	-1.05	22.04	22.03	1.39	12.22
121	1	EOC: EOC: Other PT Losses	9.95	-0.42	-0.40	21.33	21.32	1.90	12.08
121	2	EOC: EOC: Other PT Losses	9.95	0.23	0.25	20.62	20.60	2.41	11.95
122	0	EOC: EOC: Other PT Losses	9.95	0.23	0.25	20.62	20.60	2.41	11.95
122	1	EOC: EOC: Other PT Losses	9.95	4.63	4.64	15.80	15.78	5.82	11.04
122	2	EOC: EOC: Other PT Losses	9.95	9.02	9.04	10.97	10.96	9.23	10.14
123	0	EOC: EOC: Other PT Losses	9.95	9.02	9.04	10.97	10.96	9.23	10.14
123	1	EOC: EOC: Other PT Losses	9.95	13.41	13.43	6.15	6.13	12.65	9.24
123	2	EOC: EOC: Other PT Losses	9.95	17.80	17.82	1.33	1.31	16.06	8.33
124	0	EOC: EOC: Other PT Losses	9.95	17.80	17.82	1.33	1.31	16.06	8.33
124	1	EOC: EOC: Other PT Losses	9.95	18.37	18.39	0.71	0.69	16.50	8.22
124	2	EOC: EOC: Other PT Losses	9.95	18.94	18.96	0.08	0.06	16.94	8.10
126	0	EOC: EOC: Other PT Losses	34.42	9.92	9.95	61.32	61.30	15.39	39.46
126	1	EOC: EOC: Other PT Losses	34.42	12.90	12.92	58.05	58.03	17.70	38.85
126	2	EOC: EOC: Other PT Losses	34.42	15.87	15.89	54.79	54.77	20.01	38.24
127	0	EOC: EOC: Other PT Losses	34.42	15.87	15.89	54.79	54.77	20.01	38.24
127	1	EOC: EOC: Other PT Losses	34.42	26.35	26.38	43.28	43.26	28.16	36.08
127	2	EOC: EOC: Other PT Losses	34.42	36.84	36.86	31.77	31.74	36.31	33.92
128	0	EOC: EOC: Other PT Losses	34.42	36.84	36.86	31.77	31.74	36.31	33.92
128	1	EOC: EOC: Other PT Losses	34.42	47.56	47.59	19.99	19.97	44.65	31.71
133	0	EOC: EOC: Other PT Losses	32.94	60.46	60.50	2.72	2.68	54.34	27.27
133	1	EOC: EOC: Other PT Losses	32.94	48.94	48.99	15.37	15.33	45.39	29.64
133	2	EOC: EOC: Other PT Losses	32.94	37.42	37.47	28.01	27.97	36.44	32.01
134	0	EOC: EOC: Other PT Losses	32.94	37.42	37.47	28.01	27.97	36.44	32.01
134	1	EOC: EOC: Other PT Losses	32.94	25.90	25.94	40.66	40.62	27.49	34.38
134	2	EOC: EOC: Other PT Losses	32.94	14.39	14.42	53.31	53.27	18.54	36.76
135	0	EOC: EOC: Other PT Losses	32.94	14.39	14.42	53.31	53.27	18.54	36.76
135	1	EOC: EOC: Other PT Losses	32.94	11.44	11.48	56.54	56.51	16.24	37.36
135	2	EOC: EOC: Other PT Losses	32.94	8.49	8.53	59.78	59.75	13.95	37.97
137	0	EOC: EOC: Other PT Losses	3.92	22.65	22.69	-16.64	-16.67	18.49	0.07
137	1	EOC: EOC: Other PT Losses	3.92	19.98	20.02	-13.71	-13.74	16.42	0.61
137	2	EOC: EOC: Other PT Losses	3.92	17.31	17.35	-10.78	-10.81	14.34	1.16
138	0	EOC: EOC: Other PT Losses	3.92	17.31	17.35	-10.78	-10.81	14.34	1.16
138	1	EOC: EOC: Other PT Losses	3.92	9.30	9.33	-1.98	-2.01	8.11	2.81
138	2	EOC: EOC: Other PT Losses	3.92	1.29	1.32	6.81	6.79	1.89	4.46
139	0	EOC: EOC: Other PT Losses	3.92	1.29	1.32	6.82	6.79	1.89	4.46
139	1	EOC: EOC: Other PT Losses	3.92	-7.24	-7.20	16.17	16.14	-4.74	6.22
139	2	EOC: EOC: Other PT Losses	3.92	-15.76	-15.73	25.53	25.50	-11.36	7.97

MEMBER STRESSES

DECK & CANOPY MEMBERS
EOC

(-) compression

			TU(+) + TEMP. DIFF.						
Member	Station	Result Case	(P/A) @ Centroid (kips/ft²)	Normal Stress @ Point 1 (kips/ft²)	Normal Stress @ Point 2 (kips/ft²)	Normal Stress @ Point 3 (kips/ft²)	Normal Stress @ Point 4 (kips/ft²)	Normal Stress @ Point 5 (kips/ft²)	Normal Stress @ Point 6 (kips/ft²)
140	0	EOC: EOC: Other PT Losses	3.92	-15.76	-15.73	25.53	25.50	-11.36	7.97
140	1	EOC: EOC: Other PT Losses	3.92	-18.07	-18.04	28.06	28.03	-13.15	8.45
140	2	EOC: EOC: Other PT Losses	3.92	-20.37	-20.34	30.59	30.57	-14.95	8.92
142	0	EOC: EOC: Other PT Losses	-3.77	5.07	5.10	-13.48	-13.51	3.11	-5.60
142	1	EOC: EOC: Other PT Losses	-3.77	2.62	2.65	-10.79	-10.82	1.20	-5.09
142	2	EOC: EOC: Other PT Losses	-3.77	0.17	0.20	-8.10	-8.13	-0.70	-4.59
143	0	EOC: EOC: Other PT Losses	-3.77	0.17	0.19	-8.10	-8.13	-0.70	-4.59
143	1	EOC: EOC: Other PT Losses	-3.77	-4.77	-4.75	-2.68	-2.70	-4.54	-3.57
143	2	EOC: EOC: Other PT Losses	-3.77	-9.71	-9.69	2.75	2.72	-8.38	-2.55
144	0	EOC: EOC: Other PT Losses	-3.77	-9.71	-9.69	2.75	2.72	-8.38	-2.55
144	1	EOC: EOC: Other PT Losses	-3.77	-15.12	-15.09	8.68	8.66	-12.58	-1.44
144	2	EOC: EOC: Other PT Losses	-3.77	-20.52	-20.50	14.62	14.60	-16.78	-0.33
145	0	EOC: EOC: Other PT Losses	-3.77	-20.52	-20.50	14.61	14.59	-16.78	-0.33
145	1	EOC: EOC: Other PT Losses	-3.77	-21.94	-21.92	16.17	16.15	-17.89	-0.04
145	2	EOC: EOC: Other PT Losses	-3.77	-23.37	-23.34	17.73	17.71	-18.99	0.26
147	0	EOC: EOC: Other PT Losses	-7.18	-15.17	-15.14	1.59	1.57	-13.38	-5.54
147	1	EOC: EOC: Other PT Losses	-7.18	-15.66	-15.63	2.13	2.11	-13.76	-5.44
147	2	EOC: EOC: Other PT Losses	-7.18	-16.14	-16.12	2.66	2.64	-14.14	-5.34
148	0	EOC: EOC: Other PT Losses	-7.18	-16.14	-16.12	2.66	2.64	-14.14	-5.34
148	1	EOC: EOC: Other PT Losses	-7.18	-16.96	-16.94	3.56	3.54	-14.78	-5.17
148	2	EOC: EOC: Other PT Losses	-7.18	-17.78	-17.76	4.46	4.44	-15.41	-5.00
149	0	EOC: EOC: Other PT Losses	-7.18	-17.78	-17.76	4.46	4.44	-15.41	-5.00
149	1	EOC: EOC: Other PT Losses	-7.18	-18.75	-18.73	5.52	5.51	-16.16	-4.80
149	2	EOC: EOC: Other PT Losses	-7.18	-19.71	-19.70	6.58	6.57	-16.91	-4.60
150	0	EOC: EOC: Other PT Losses	-7.18	-19.71	-19.70	6.58	6.57	-16.91	-4.60
150	1	EOC: EOC: Other PT Losses	-7.18	-19.92	-19.91	6.81	6.80	-17.08	-4.56
150	2	EOC: EOC: Other PT Losses	-7.18	-20.13	-20.12	7.04	7.03	-17.24	-4.51
152	0	EOC: EOC: Other PT Losses	-6.92	-41.16	-41.14	30.67	30.66	-33.52	0.13
152	1	EOC: EOC: Other PT Losses	-6.92	-36.06	-36.05	25.08	25.07	-29.56	-0.92
152	2	EOC: EOC: Other PT Losses	-6.92	-30.97	-30.95	19.48	19.47	-25.60	-1.97
153	0	EOC: EOC: Other PT Losses	-6.92	-30.97	-30.95	19.48	19.47	-25.60	-1.97
153	1	EOC: EOC: Other PT Losses	-6.92	-22.63	-22.62	10.34	10.33	-19.13	-3.68
153	2	EOC: EOC: Other PT Losses	-6.92	-14.30	-14.29	1.19	1.18	-12.65	-5.40
154	0	EOC: EOC: Other PT Losses	-6.92	-14.30	-14.29	1.19	1.18	-12.65	-5.40
154	1	EOC: EOC: Other PT Losses	-6.92	-5.26	-5.25	-8.74	-8.75	-5.63	-7.26
154	2	EOC: EOC: Other PT Losses	-6.92	3.78	3.79	-18.66	-18.67	1.40	-9.12
155	0	EOC: EOC: Other PT Losses	-6.92	3.78	3.79	-18.66	-18.67	1.40	-9.12
155	1	EOC: EOC: Other PT Losses	-6.92	6.61	6.62	-21.77	-21.78	3.60	-9.70
155	2	EOC: EOC: Other PT Losses	-6.92	9.44	9.45	-24.88	-24.88	5.80	-10.28
157	0	EOC: EOC: Other PT Losses	-1.91	-36.34	-36.33	35.89	35.88	-28.66	5.18
157	1	EOC: EOC: Other PT Losses	-1.91	-31.15	-31.14	30.19	30.19	-24.63	4.11
157	2	EOC: EOC: Other PT Losses	-1.91	-25.97	-25.96	24.50	24.49	-20.60	3.04
158	0	EOC: EOC: Other PT Losses	-1.91	-25.97	-25.96	24.50	24.49	-20.60	3.04
158	1	EOC: EOC: Other PT Losses	-1.91	-9.35	-9.35	6.26	6.25	-7.69	-0.38
158	2	EOC: EOC: Other PT Losses	-1.91	7.26	7.27	-11.98	-11.99	5.22	-3.80
159	0	EOC: EOC: Other PT Losses	-1.91	7.26	7.27	-11.98	-11.99	5.22	-3.80
159	1	EOC: EOC: Other PT Losses	-1.91	24.11	24.11	-30.48	-30.48	18.31	-7.27
159	2	EOC: EOC: Other PT Losses	-1.91	40.95	40.95	-48.97	-48.97	31.40	-10.73

MEMBER STRESSES

DECK & CANOPY MEMBERS
EOC **CASE A: LL ON FULL LENGTH OF BRIDGE**

(-) compression

σ_{t_allow} = 3sqrt(f'c) = 39.8 ksf
σ_{c_allow} = 0.45(f'c) = -550.8 ksf

			SERVICE III-CASE A						
Member	Station	Result Case	(P/A) @ Centroid (kips/ft²)	Normal Stress @ Point 1 (kips/ft²)	Normal Stress @ Point 2 (kips/ft²)	Normal Stress @ Point 3 (kips/ft²)	Normal Stress @ Point 4 (kips/ft²)	Normal Stress @ Point 5 (kips/ft²)	Normal Stress @ Point 6 (kips/ft²)
1	0	EOC: EOC: Other PT Losses	-172	-3	-3	-148	-148	-55	-426
1	1	EOC: EOC: Other PT Losses	-171	-10	-10	-147	-147	-59	-413
1	2	EOC: EOC: Other PT Losses	-171	-17	-17	-148	-148	-64	-401
2	0	EOC: EOC: Other PT Losses	-170	-16	-16	-148	-148	-63	-385
2	1	EOC: EOC: Other PT Losses	-170	-77	-77	-157	-157	-105	-301
2	2	EOC: EOC: Other PT Losses	-170	-138	-138	-166	-166	-148	-215
3	0	EOC: EOC: Other PT Losses	-127	-78	-78	-120	-120	-93	-200
3	1	EOC: EOC: Other PT Losses	-134	-167	-167	-138	-138	-157	-84
3	2	EOC: EOC: Other PT Losses	-133	-186	-186	-141	-141	-170	-54
4	0	EOC: EOC: Other PT Losses	-133	-186	-186	-141	-141	-170	-54
4	1	EOC: EOC: Other PT Losses	-134	-209	-209	-145	-145	-186	-20
4	2	EOC: EOC: Other PT Losses	-134	-207	-207	-144	-144	-184	-24
5	0	EOC: EOC: Other PT Losses	-134	-207	-207	-144	-144	-184	-24
5	1	EOC: EOC: Other PT Losses	-134	-179	-179	-140	-140	-165	-66
5	2	EOC: EOC: Other PT Losses	-134	-125	-125	-133	-133	-128	-147
6	0	EOC: EOC: Other PT Losses	-134	-125	-125	-133	-133	-128	-147
6	1	EOC: EOC: Other PT Losses	-134	-116	-116	-131	-131	-122	-161
6	2	EOC: EOC: Other PT Losses	-134	-107	-107	-130	-130	-115	-175
7	0	EOC: EOC: Other PT Losses	-138	-96	-96	-132	-132	-109	-202
7	1	EOC: EOC: Other PT Losses	-138	-108	-108	-134	-134	-117	-183
7	2	EOC: EOC: Other PT Losses	-138	-120	-120	-136	-136	-126	-165
8	0	EOC: EOC: Other PT Losses	-124	-103	-103	-121	-121	-110	-157
8	1	EOC: EOC: Other PT Losses	-125	-130	-130	-126	-125	-128	-117
8	2	EOC: EOC: Other PT Losses	-125	-152	-152	-129	-129	-144	-83
9	0	EOC: EOC: Other PT Losses	-125	-152	-152	-129	-129	-144	-83
9	1	EOC: EOC: Other PT Losses	-125	-188	-188	-134	-134	-168	-31
9	2	EOC: EOC: Other PT Losses	-125	-194	-194	-135	-135	-173	-21
10	0	EOC: EOC: Other PT Losses	-125	-194	-194	-135	-135	-173	-21
10	1	EOC: EOC: Other PT Losses	-125	-172	-172	-132	-132	-158	-55
10	2	EOC: EOC: Other PT Losses	-125	-121	-121	-125	-125	-122	-133
11	0	EOC: EOC: Other PT Losses	-125	-121	-121	-125	-125	-122	-133
11	1	EOC: EOC: Other PT Losses	-125	-111	-112	-123	-123	-116	-146
11	2	EOC: EOC: Other PT Losses	-125	-102	-102	-122	-122	-109	-161
12	0	EOC: EOC: Other PT Losses	-126	-107	-107	-123	-123	-113	-154
12	1	EOC: EOC: Other PT Losses	-126	-107	-108	-123	-123	-113	-153
12	2	EOC: EOC: Other PT Losses	-126	-108	-108	-123	-123	-113	-152
13	0	EOC: EOC: Other PT Losses	-131	-110	-110	-128	-128	-116	-163
13	1	EOC: EOC: Other PT Losses	-131	-132	-133	-131	-131	-132	-129
13	2	EOC: EOC: Other PT Losses	-131	-152	-152	-134	-134	-145	-100
14	0	EOC: EOC: Other PT Losses	-131	-152	-152	-134	-134	-145	-100
14	1	EOC: EOC: Other PT Losses	-131	-190	-190	-140	-140	-172	-43
14	2	EOC: EOC: Other PT Losses	-131	-193	-193	-141	-140	-174	-39
15	0	EOC: EOC: Other PT Losses	-131	-193	-193	-141	-140	-174	-39
15	1	EOC: EOC: Other PT Losses	-132	-162	-162	-136	-136	-153	-86
15	2	EOC: EOC: Other PT Losses	-132	-96	-96	-127	-127	-107	-185
16	0	EOC: EOC: Other PT Losses	-132	-96	-96	-127	-127	-107	-185
16	1	EOC: EOC: Other PT Losses	-132	-86	-86	-125	-125	-100	-200
16	2	EOC: EOC: Other PT Losses	-132	-76	-76	-124	-124	-93	-216

MEMBER STRESSES

DECK & CANOPY MEMBERS
EOC **CASE A: LL ON FULL LENGTH OF BRIDGE**

(-) compression

σ_{t_allow} = 3sqrt(f'c) = 39.8 ksf
σ_{c_allow} = 0.45(f'c) = -550.8 ksf

			SERVICE III-CASE A						
Member	Station	Result Case	(P/A) @ Centroid (kips/ft²)	Normal Stress @ Point 1 (kips/ft²)	Normal Stress @ Point 2 (kips/ft²)	Normal Stress @ Point 3 (kips/ft²)	Normal Stress @ Point 4 (kips/ft²)	Normal Stress @ Point 5 (kips/ft²)	Normal Stress @ Point 6 (kips/ft²)
17	0	EOC: EOC: Other PT Losses	-134	-96	-97	-129	-129	-108	-191
17	1	EOC: EOC: Other PT Losses	-134	-86	-86	-127	-127	-101	-207
17	2	EOC: EOC: Other PT Losses	-134	-75	-75	-125	-125	-93	-223
18	0	EOC: EOC: Other PT Losses	-152	-90	-90	-143	-143	-109	-246
18	1	EOC: EOC: Other PT Losses	-152	-113	-113	-146	-146	-125	-211
18	2	EOC: EOC: Other PT Losses	-152	-134	-134	-149	-149	-139	-179
19	0	EOC: EOC: Other PT Losses	-152	-134	-134	-149	-149	-139	-179
19	1	EOC: EOC: Other PT Losses	-152	-198	-198	-159	-159	-184	-84
19	2	EOC: EOC: Other PT Losses	-152	-221	-221	-163	-162	-200	-49
20	0	EOC: EOC: Other PT Losses	-152	-221	-221	-163	-162	-200	-49
20	1	EOC: EOC: Other PT Losses	-153	-204	-204	-160	-160	-188	-76
20	2	EOC: EOC: Other PT Losses	-153	-145	-145	-152	-152	-148	-164
21	0	EOC: EOC: Other PT Losses	-153	-145	-145	-152	-152	-148	-164
21	1	EOC: EOC: Other PT Losses	-153	-130	-130	-150	-150	-138	-186
21	2	EOC: EOC: Other PT Losses	-153	-113	-113	-147	-147	-127	-209
22	0	EOC: EOC: Other PT Losses	-167	-139	-139	-164	-163	-150	-198
22	1	EOC: EOC: Other PT Losses	-166	-121	-121	-160	-160	-137	-229
22	2	EOC: EOC: Other PT Losses	-166	-102	-102	-157	-157	-122	-261
23	0	EOC: EOC: Other PT Losses	-184	-122	-122	-176	-176	-143	-267
23	1	EOC: EOC: Other PT Losses	-184	-137	-137	-178	-178	-153	-246
23	2	EOC: EOC: Other PT Losses	-184	-150	-151	-180	-179	-163	-227
24	0	EOC: EOC: Other PT Losses	-184	-150	-151	-180	-179	-163	-227
24	1	EOC: EOC: Other PT Losses	-184	-213	-213	-188	-188	-204	-140
24	2	EOC: EOC: Other PT Losses	-184	-225	-225	-190	-190	-212	-122
25	0	EOC: EOC: Other PT Losses	-184	-225	-225	-190	-190	-212	-122
25	1	EOC: EOC: Other PT Losses	-184	-190	-190	-185	-185	-188	-164
25	2	EOC: EOC: Other PT Losses	-184	-108	-108	-173	-172	-131	-276
26	0	EOC: EOC: Other PT Losses	-184	-108	-108	-173	-172	-131	-276
26	1	EOC: EOC: Other PT Losses	-184	-79	-79	-168	-168	-111	-315
26	2	EOC: EOC: Other PT Losses	-181	9	9	-154	-154	-49	-440
29	0	EOC: EOC: Other PT Losses	-103	29	30	-83	-84	-11	-273
29	1	EOC: EOC: Other PT Losses	-102	-30	-29	-91	-92	-51	-186
29	2	EOC: EOC: Other PT Losses	-102	-57	-56	-95	-96	-70	-148
30	0	EOC: EOC: Other PT Losses	-102	-57	-56	-95	-96	-70	-148
30	1	EOC: EOC: Other PT Losses	-102	-134	-134	-106	-107	-124	-46
30	2	EOC: EOC: Other PT Losses	-102	-165	-165	-110	-111	-146	-6
31	0	EOC: EOC: Other PT Losses	-102	-165	-165	-110	-111	-146	-6
31	1	EOC: EOC: Other PT Losses	-101	-149	-149	-108	-109	-134	-30
31	2	EOC: EOC: Other PT Losses	-101	-78	-77	-99	-99	-87	-124
32	0	EOC: EOC: Other PT Losses	-101	-78	-77	-99	-99	-87	-124
32	1	EOC: EOC: Other PT Losses	-101	-63	-63	-97	-97	-77	-143
32	2	EOC: EOC: Other PT Losses	-101	-48	-47	-95	-95	-67	-165
33	0	EOC: EOC: Other PT Losses	-91	-42	-41	-84	-85	-60	-157
33	1	EOC: EOC: Other PT Losses	-91	-45	-44	-85	-85	-62	-150
33	2	EOC: EOC: Other PT Losses	-91	-47	-47	-86	-86	-64	-143
34	0	EOC: EOC: Other PT Losses	-91	-41	-41	-83	-84	-58	-161
34	1	EOC: EOC: Other PT Losses	-91	-49	-49	-85	-85	-63	-149
34	2	EOC: EOC: Other PT Losses	-91	-57	-56	-86	-86	-68	-139

MEMBER STRESSES

DECK & CANOPY MEMBERS
EOC **CASE A: LL ON FULL LENGTH OF BRIDGE**

(-) compression

σ_{t_allow} = 3sqrt(f'c) = 39.8 ksf
σ_{c_allow} = 0.45(f'c) = -550.8 ksf

			SERVICE III-CASE A						
Member	Station	Result Case	(P/A) @ Centroid (kips/ft²)	Normal Stress @ Point 1 (kips/ft²)	Normal Stress @ Point 2 (kips/ft²)	Normal Stress @ Point 3 (kips/ft²)	Normal Stress @ Point 4 (kips/ft²)	Normal Stress @ Point 5 (kips/ft²)	Normal Stress @ Point 6 (kips/ft²)
35	0	EOC: EOC: Other PT Losses	-91	-57	-56	-86	-86	-68	-139
35	1	EOC: EOC: Other PT Losses	-90	-77	-77	-88	-89	-82	-110
35	2	EOC: EOC: Other PT Losses	-90	-92	-92	-90	-91	-91	-88
36	0	EOC: EOC: Other PT Losses	-90	-92	-92	-90	-91	-91	-88
36	1	EOC: EOC: Other PT Losses	-90	-101	-101	-92	-92	-98	-74
36	2	EOC: EOC: Other PT Losses	-90	-106	-105	-92	-93	-101	-68
37	0	EOC: EOC: Other PT Losses	-90	-106	-105	-92	-93	-101	-68
37	1	EOC: EOC: Other PT Losses	-90	-106	-106	-92	-93	-101	-67
37	2	EOC: EOC: Other PT Losses	-90	-105	-105	-92	-93	-100	-69
38	0	EOC: EOC: Other PT Losses	-83	-92	-91	-84	-85	-89	-71
38	1	EOC: EOC: Other PT Losses	-84	-95	-95	-85	-85	-92	-66
38	2	EOC: EOC: Other PT Losses	-84	-99	-98	-86	-86	-94	-61
39	0	EOC: EOC: Other PT Losses	-84	-86	-86	-84	-84	-85	-81
39	1	EOC: EOC: Other PT Losses	-84	-91	-91	-85	-85	-89	-74
39	2	EOC: EOC: Other PT Losses	-84	-95	-95	-85	-86	-92	-67
40	0	EOC: EOC: Other PT Losses	-84	-95	-95	-85	-86	-92	-67
40	1	EOC: EOC: Other PT Losses	-84	-106	-105	-87	-87	-99	-51
40	2	EOC: EOC: Other PT Losses	-84	-112	-112	-88	-88	-103	-42
41	0	EOC: EOC: Other PT Losses	-84	-112	-112	-88	-88	-103	-42
41	1	EOC: EOC: Other PT Losses	-84	-114	-114	-88	-88	-105	-38
41	2	EOC: EOC: Other PT Losses	-84	-113	-112	-88	-88	-104	-41
42	0	EOC: EOC: Other PT Losses	-84	-113	-112	-88	-88	-104	-41
42	1	EOC: EOC: Other PT Losses	-84	-109	-109	-87	-88	-101	-45
42	2	EOC: EOC: Other PT Losses	-84	-104	-104	-87	-87	-98	-53
43	0	EOC: EOC: Other PT Losses	-80	-97	-97	-83	-83	-93	-52
43	1	EOC: EOC: Other PT Losses	-80	-99	-99	-83	-83	-94	-51
43	2	EOC: EOC: Other PT Losses	-80	-100	-100	-83	-83	-95	-49
44	0	EOC: EOC: Other PT Losses	-80	-92	-92	-82	-82	-91	-56
44	1	EOC: EOC: Other PT Losses	-80	-97	-97	-83	-83	-95	-49
44	2	EOC: EOC: Other PT Losses	-80	-101	-101	-84	-84	-98	-41
45	0	EOC: EOC: Other PT Losses	-80	-101	-101	-84	-84	-98	-41
45	1	EOC: EOC: Other PT Losses	-80	-111	-111	-85	-85	-105	-25
45	2	EOC: EOC: Other PT Losses	-80	-118	-118	-86	-86	-110	-14
46	0	EOC: EOC: Other PT Losses	-80	-118	-118	-86	-86	-110	-14
46	1	EOC: EOC: Other PT Losses	-80	-121	-120	-87	-87	-112	-8
46	2	EOC: EOC: Other PT Losses	-80	-120	-120	-87	-87	-112	-8
47	0	EOC: EOC: Other PT Losses	-80	-120	-120	-87	-87	-112	-8
47	1	EOC: EOC: Other PT Losses	-80	-117	-117	-87	-87	-110	-11
47	2	EOC: EOC: Other PT Losses	-80	-113	-113	-86	-86	-107	-16
48	0	EOC: EOC: Other PT Losses	-83	-111	-111	-89	-89	-105	-14
48	1	EOC: EOC: Other PT Losses	-83	-111	-111	-89	-89	-105	-16
48	2	EOC: EOC: Other PT Losses	-83	-111	-111	-89	-89	-105	-19
49	0	EOC: EOC: Other PT Losses	-82	-107	-107	-89	-89	-102	-8
49	1	EOC: EOC: Other PT Losses	-82	-107	-107	-88	-89	-102	-11
49	2	EOC: EOC: Other PT Losses	-82	-106	-106	-88	-88	-101	-15
50	0	EOC: EOC: Other PT Losses	-82	-106	-106	-88	-88	-101	-15
50	1	EOC: EOC: Other PT Losses	-82	-101	-101	-87	-87	-98	-27
50	2	EOC: EOC: Other PT Losses	-82	-94	-94	-85	-85	-93	-45

MEMBER STRESSES

DECK & CANOPY MEMBERS

EOC **CASE A: LL ON FULL LENGTH OF BRIDGE**

(-) compression

σ_{t_allow} = 3sqrt(f'c) = 39.8 ksf

σ_{c_allow} = 0.45(f'c) = -550.8 ksf

			SERVICE III-CASE A						
Member	Station	Result Case	(P/A) @ Centroid (kips/ft²)	Normal Stress @ Point 1 (kips/ft²)	Normal Stress @ Point 2 (kips/ft²)	Normal Stress @ Point 3 (kips/ft²)	Normal Stress @ Point 4 (kips/ft²)	Normal Stress @ Point 5 (kips/ft²)	Normal Stress @ Point 6 (kips/ft²)
51	0	EOC: EOC: Other PT Losses	-82	-94	-94	-85	-85	-93	-45
51	1	EOC: EOC: Other PT Losses	-82	-83	-83	-83	-83	-85	-68
51	2	EOC: EOC: Other PT Losses	-81	-69	-69	-80	-80	-75	-95
52	0	EOC: EOC: Other PT Losses	-81	-69	-69	-80	-80	-75	-95
52	1	EOC: EOC: Other PT Losses	-81	-55	-55	-78	-78	-64	-120
52	2	EOC: EOC: Other PT Losses	-81	-37	-37	-75	-75	-51	-147
60	0	EOC: EOC: Other PT Losses	0	0	0	0	0	0	0
60	1	EOC: EOC: Other PT Losses	-175	7	7	-149	-149	-49	-449
60	2	EOC: EOC: Other PT Losses	-174	-42	-42	-155	-155	-82	-372
101	0	EOC: EOC: Other PT Losses	-203	-357	-357	-33	-33	-322	-171
101	1	EOC: EOC: Other PT Losses	-203	-224	-224	-179	-179	-219	-198
101	2	EOC: EOC: Other PT Losses	-207	-207	-207	-207	-207	-207	-207
102	0	EOC: EOC: Other PT Losses	-207	-207	-207	-207	-207	-207	-207
102	1	EOC: EOC: Other PT Losses	-210	-326	-326	-84	-84	-300	-187
102	2	EOC: EOC: Other PT Losses	-212	-272	-272	-146	-146	-259	-200
103	0	EOC: EOC: Other PT Losses	-212	-272	-272	-146	-146	-259	-200
103	1	EOC: EOC: Other PT Losses	-220	-259	-259	-176	-176	-251	-211
103	2	EOC: EOC: Other PT Losses	-220	-222	-222	-217	-217	-222	-219
104	0	EOC: EOC: Other PT Losses	-220	-222	-222	-217	-217	-222	-219
104	1	EOC: EOC: Other PT Losses	-220	-205	-205	-236	-236	-208	-223
104	2	EOC: EOC: Other PT Losses	-227	-187	-187	-270	-270	-196	-235
106	0	EOC: EOC: Other PT Losses	-309	-237	-237	-376	-376	-256	-322
106	1	EOC: EOC: Other PT Losses	-301	-246	-246	-351	-351	-261	-311
106	2	EOC: EOC: Other PT Losses	-301	-260	-260	-338	-338	-272	-308
107	0	EOC: EOC: Other PT Losses	-301	-260	-260	-338	-338	-272	-308
107	1	EOC: EOC: Other PT Losses	-302	-327	-327	-274	-274	-321	-296
107	2	EOC: EOC: Other PT Losses	-302	-353	-353	-246	-246	-342	-291
108	0	EOC: EOC: Other PT Losses	-302	-353	-353	-246	-246	-342	-291
108	1	EOC: EOC: Other PT Losses	-302	-349	-349	-250	-250	-339	-292
108	2	EOC: EOC: Other PT Losses	-302	-320	-320	-273	-273	-316	-299
109	0	EOC: EOC: Other PT Losses	-302	-320	-320	-273	-273	-316	-299
109	1	EOC: EOC: Other PT Losses	-302	-306	-306	-284	-284	-305	-301
109	2	EOC: EOC: Other PT Losses	-310	-293	-293	-311	-311	-297	-314
111	0	EOC: EOC: Other PT Losses	-341	-384	-384	-293	-293	-375	-332
111	1	EOC: EOC: Other PT Losses	-332	-384	-384	-275	-275	-373	-322
111	2	EOC: EOC: Other PT Losses	-332	-389	-389	-270	-270	-376	-321
112	0	EOC: EOC: Other PT Losses	-332	-389	-389	-270	-270	-376	-321
112	1	EOC: EOC: Other PT Losses	-333	-411	-411	-247	-247	-393	-317
112	2	EOC: EOC: Other PT Losses	-333	-398	-398	-261	-261	-384	-320
113	0	EOC: EOC: Other PT Losses	-333	-398	-398	-261	-261	-384	-320
113	1	EOC: EOC: Other PT Losses	-333	-355	-355	-309	-309	-350	-329
113	2	EOC: EOC: Other PT Losses	-333	-284	-284	-387	-387	-295	-343
114	0	EOC: EOC: Other PT Losses	-333	-284	-284	-387	-387	-295	-343
114	1	EOC: EOC: Other PT Losses	-333	-260	-260	-414	-414	-276	-348
114	2	EOC: EOC: Other PT Losses	-342	-239	-239	-455	-455	-262	-363
116	0	EOC: EOC: Other PT Losses	-328	-360	-360	-285	-285	-353	-322
116	1	EOC: EOC: Other PT Losses	-320	-359	-359	-270	-270	-350	-312
116	2	EOC: EOC: Other PT Losses	-320	-363	-363	-267	-267	-354	-312

MEMBER STRESSES

DECK & CANOPY MEMBERS

EOC **CASE A: LL ON FULL LENGTH OF BRIDGE**

(-) compression

σ_{t_allow} = 3sqrt(f'c) = 39.8 ksf

σ_{c_allow} = 0.45(f'c) = -550.8 ksf

			SERVICE III-CASE A						
Member	Station	Result Case	(P/A) @ Centroid (kips/ft²)	Normal Stress @ Point 1 (kips/ft²)	Normal Stress @ Point 2 (kips/ft²)	Normal Stress @ Point 3 (kips/ft²)	Normal Stress @ Point 4 (kips/ft²)	Normal Stress @ Point 5 (kips/ft²)	Normal Stress @ Point 6 (kips/ft²)
117	0	EOC: EOC: Other PT Losses	-320	-363	-363	-267	-267	-354	-312
117	1	EOC: EOC: Other PT Losses	-321	-382	-382	-251	-251	-369	-308
117	2	EOC: EOC: Other PT Losses	-321	-367	-367	-271	-271	-356	-312
118	0	EOC: EOC: Other PT Losses	-321	-367	-367	-271	-271	-356	-312
118	1	EOC: EOC: Other PT Losses	-321	-319	-319	-324	-324	-319	-322
118	2	EOC: EOC: Other PT Losses	-321	-239	-239	-410	-410	-259	-338
119	0	EOC: EOC: Other PT Losses	-321	-239	-239	-410	-410	-259	-338
119	1	EOC: EOC: Other PT Losses	-321	-219	-219	-430	-430	-243	-342
119	2	EOC: EOC: Other PT Losses	-329	-203	-203	-464	-464	-232	-354
121	0	EOC: EOC: Other PT Losses	-252	-272	-272	-224	-224	-271	-247
121	1	EOC: EOC: Other PT Losses	-246	-277	-276	-207	-207	-273	-238
121	2	EOC: EOC: Other PT Losses	-246	-284	-284	-200	-200	-278	-237
122	0	EOC: EOC: Other PT Losses	-246	-284	-284	-200	-200	-278	-237
122	1	EOC: EOC: Other PT Losses	-246	-305	-305	-180	-181	-292	-233
122	2	EOC: EOC: Other PT Losses	-246	-287	-287	-200	-200	-278	-237
123	0	EOC: EOC: Other PT Losses	-246	-287	-287	-200	-200	-278	-237
123	1	EOC: EOC: Other PT Losses	-246	-237	-237	-255	-255	-239	-247
123	2	EOC: EOC: Other PT Losses	-246	-154	-153	-345	-345	-174	-265
124	0	EOC: EOC: Other PT Losses	-246	-154	-153	-345	-345	-174	-265
124	1	EOC: EOC: Other PT Losses	-246	-141	-141	-357	-357	-164	-267
124	2	EOC: EOC: Other PT Losses	-251	-132	-132	-377	-377	-159	-275
126	0	EOC: EOC: Other PT Losses	-108	-189	-189	-19	-19	-171	-91
126	1	EOC: EOC: Other PT Losses	-105	-189	-189	-11	-12	-170	-87
126	2	EOC: EOC: Other PT Losses	-105	-190	-190	-10	-10	-171	-87
127	0	EOC: EOC: Other PT Losses	-105	-190	-190	-10	-10	-171	-87
127	1	EOC: EOC: Other PT Losses	-104	-173	-172	-30	-30	-157	-91
127	2	EOC: EOC: Other PT Losses	-104	-128	-128	-79	-79	-123	-100
128	0	EOC: EOC: Other PT Losses	-104	-128	-128	-79	-79	-123	-100
128	1	EOC: EOC: Other PT Losses	-104	-57	-57	-156	-156	-67	-114
133	0	EOC: EOC: Other PT Losses	-65	38	38	-176	-177	15	-86
133	1	EOC: EOC: Other PT Losses	-65	-37	-36	-96	-96	-43	-71
133	2	EOC: EOC: Other PT Losses	-65	-85	-85	-42	-42	-81	-60
134	0	EOC: EOC: Other PT Losses	-65	-85	-85	-42	-42	-81	-60
134	1	EOC: EOC: Other PT Losses	-64	-107	-107	-17	-18	-98	-56
134	2	EOC: EOC: Other PT Losses	-64	-102	-102	-22	-23	-94	-56
135	0	EOC: EOC: Other PT Losses	-64	-102	-102	-22	-23	-94	-56
135	1	EOC: EOC: Other PT Losses	-64	-96	-96	-29	-29	-89	-58
135	2	EOC: EOC: Other PT Losses	-68	-94	-94	-40	-40	-88	-63
137	0	EOC: EOC: Other PT Losses	-159	-34	-34	-267	-267	-62	-183
137	1	EOC: EOC: Other PT Losses	-153	-43	-43	-249	-249	-68	-175
137	2	EOC: EOC: Other PT Losses	-153	-61	-61	-235	-235	-82	-172
138	0	EOC: EOC: Other PT Losses	-153	-61	-61	-235	-235	-82	-172
138	1	EOC: EOC: Other PT Losses	-153	-110	-110	-196	-196	-120	-162
138	2	EOC: EOC: Other PT Losses	-153	-154	-154	-153	-153	-154	-153
139	0	EOC: EOC: Other PT Losses	-153	-154	-154	-153	-153	-154	-153
139	1	EOC: EOC: Other PT Losses	-153	-184	-184	-105	-106	-178	-144
139	2	EOC: EOC: Other PT Losses	-153	-206	-206	-65	-65	-196	-137

MEMBER STRESSES

DECK & CANOPY MEMBERS
EOC **CASE A: LL ON FULL LENGTH OF BRIDGE**

(-) compression

σ_{t_allow} = 3sqrt(f'c) = 39.8 ksf
σ_{c_allow} = 0.45(f'c) = -550.8 ksf

			SERVICE III-CASE A						
Member	Station	Result Case	(P/A) @ Centroid (kips/ft²)	Normal Stress @ Point 1 (kips/ft²)	Normal Stress @ Point 2 (kips/ft²)	Normal Stress @ Point 3 (kips/ft²)	Normal Stress @ Point 4 (kips/ft²)	Normal Stress @ Point 5 (kips/ft²)	Normal Stress @ Point 6 (kips/ft²)
140	0	EOC: EOC: Other PT Losses	-153	-206	-206	-65	-65	-196	-137
140	1	EOC: EOC: Other PT Losses	-153	-210	-210	-57	-57	-198	-135
140	2	EOC: EOC: Other PT Losses	-159	-222	-222	-51	-51	-209	-139
142	0	EOC: EOC: Other PT Losses	-169	-132	-132	-205	-205	-141	-176
142	1	EOC: EOC: Other PT Losses	-163	-138	-138	-189	-189	-144	-168
142	2	EOC: EOC: Other PT Losses	-163	-150	-150	-177	-177	-153	-165
143	0	EOC: EOC: Other PT Losses	-163	-150	-150	-177	-177	-153	-165
143	1	EOC: EOC: Other PT Losses	-163	-168	-168	-157	-157	-167	-161
143	2	EOC: EOC: Other PT Losses	-162	-182	-182	-137	-137	-178	-158
144	0	EOC: EOC: Other PT Losses	-162	-182	-182	-137	-137	-178	-158
144	1	EOC: EOC: Other PT Losses	-162	-194	-194	-116	-116	-187	-156
144	2	EOC: EOC: Other PT Losses	-162	-200	-199	-101	-101	-191	-155
145	0	EOC: EOC: Other PT Losses	-162	-200	-199	-101	-101	-191	-155
145	1	EOC: EOC: Other PT Losses	-162	-198	-198	-100	-100	-190	-155
145	2	EOC: EOC: Other PT Losses	-168	-207	-207	-102	-102	-198	-161
147	0	EOC: EOC: Other PT Losses	-172	-118	-118	-227	-228	-130	-184
147	1	EOC: EOC: Other PT Losses	-166	-126	-126	-206	-206	-135	-174
147	2	EOC: EOC: Other PT Losses	-166	-142	-142	-188	-188	-147	-171
148	0	EOC: EOC: Other PT Losses	-166	-142	-142	-188	-188	-147	-171
148	1	EOC: EOC: Other PT Losses	-166	-166	-166	-160	-160	-166	-166
148	2	EOC: EOC: Other PT Losses	-166	-187	-187	-137	-137	-182	-162
149	0	EOC: EOC: Other PT Losses	-166	-187	-187	-137	-137	-182	-162
149	1	EOC: EOC: Other PT Losses	-166	-205	-205	-116	-116	-197	-158
149	2	EOC: EOC: Other PT Losses	-166	-218	-218	-100	-100	-207	-155
150	0	EOC: EOC: Other PT Losses	-166	-218	-218	-100	-100	-207	-155
150	1	EOC: EOC: Other PT Losses	-166	-220	-220	-99	-99	-208	-155
150	2	EOC: EOC: Other PT Losses	-172	-230	-230	-100	-100	-217	-160
152	0	EOC: EOC: Other PT Losses	-171	-159	-159	-138	-138	-162	-174
152	1	EOC: EOC: Other PT Losses	-165	-158	-158	-135	-135	-160	-166
152	2	EOC: EOC: Other PT Losses	-165	-166	-165	-135	-135	-165	-165
153	0	EOC: EOC: Other PT Losses	-165	-166	-165	-135	-135	-165	-165
153	1	EOC: EOC: Other PT Losses	-165	-173	-173	-141	-141	-172	-163
153	2	EOC: EOC: Other PT Losses	-165	-177	-177	-150	-150	-175	-162
154	0	EOC: EOC: Other PT Losses	-165	-177	-177	-150	-150	-175	-162
154	1	EOC: EOC: Other PT Losses	-165	-179	-179	-150	-150	-176	-162
154	2	EOC: EOC: Other PT Losses	-165	-168	-168	-154	-154	-169	-163
155	0	EOC: EOC: Other PT Losses	-165	-168	-168	-154	-154	-169	-163
155	1	EOC: EOC: Other PT Losses	-165	-159	-159	-158	-158	-163	-163
155	2	EOC: EOC: Other PT Losses	-171	-160	-160	-165	-165	-165	-170
157	0	EOC: EOC: Other PT Losses	-167	-94	-94	-194	-194	-110	-174
157	1	EOC: EOC: Other PT Losses	-159	-98	-98	-181	-181	-112	-166
157	2	EOC: EOC: Other PT Losses	-155	-111	-111	-167	-167	-121	-160
158	0	EOC: EOC: Other PT Losses	-155	-111	-111	-167	-167	-121	-160
158	1	EOC: EOC: Other PT Losses	-155	-184	-184	-114	-114	-178	-149
158	2	EOC: EOC: Other PT Losses	-155	-231	-231	-59	-59	-215	-137
159	0	EOC: EOC: Other PT Losses	-155	-231	-231	-59	-59	-215	-137
159	1	EOC: EOC: Other PT Losses	-151	-206	-206	-51	-51	-194	-132
159	2	EOC: EOC: Other PT Losses	-151	-161	-161	-73	-73	-160	-136

MEMBER STRESSES

DECK & CANOPY MEMBERS
EOC **CASE B: LL ON MAIN SPAN ONLY**

(-) compression

σ_{t_allow} = 3sqrt(f'c) = 39.8 ksf
σ_{c_allow} = 0.45(f'c) = -550.8 ksf

			SERVICE III-CASE B						
Member	Station	Result Case	(P/A) @ Centroid (kips/ft²)	Normal Stress @ Point 1 (kips/ft²)	Normal Stress @ Point 2 (kips/ft²)	Normal Stress @ Point 3 (kips/ft²)	Normal Stress @ Point 4 (kips/ft²)	Normal Stress @ Point 5 (kips/ft²)	Normal Stress @ Point 6 (kips/ft²)
1	0	EOC: EOC: Other PT Losses	-172	-3	-3	-148	-148	-55	-426
1	1	EOC: EOC: Other PT Losses	-171	-10	-10	-147	-147	-59	-413
1	2	EOC: EOC: Other PT Losses	-171	-17	-17	-148	-148	-64	-401
2	0	EOC: EOC: Other PT Losses	-170	-16	-16	-148	-148	-63	-386
2	1	EOC: EOC: Other PT Losses	-170	-77	-77	-157	-157	-106	-300
2	2	EOC: EOC: Other PT Losses	-170	-139	-139	-166	-166	-149	-216
3	0	EOC: EOC: Other PT Losses	-129	-79	-79	-122	-122	-94	-206
3	1	EOC: EOC: Other PT Losses	-136	-167	-167	-141	-141	-158	-90
3	2	EOC: EOC: Other PT Losses	-136	-186	-186	-143	-143	-171	-60
4	0	EOC: EOC: Other PT Losses	-136	-186	-186	-143	-143	-171	-60
4	1	EOC: EOC: Other PT Losses	-136	-209	-209	-147	-147	-187	-26
4	2	EOC: EOC: Other PT Losses	-136	-207	-207	-147	-147	-185	-30
5	0	EOC: EOC: Other PT Losses	-136	-207	-207	-147	-147	-185	-30
5	1	EOC: EOC: Other PT Losses	-136	-179	-179	-143	-143	-166	-72
5	2	EOC: EOC: Other PT Losses	-137	-125	-126	-135	-135	-129	-153
6	0	EOC: EOC: Other PT Losses	-137	-125	-126	-135	-135	-129	-153
6	1	EOC: EOC: Other PT Losses	-137	-116	-116	-134	-134	-123	-167
6	2	EOC: EOC: Other PT Losses	-136	-106	-106	-132	-132	-116	-181
7	0	EOC: EOC: Other PT Losses	-141	-97	-97	-134	-134	-110	-206
7	1	EOC: EOC: Other PT Losses	-141	-109	-109	-136	-136	-119	-188
7	2	EOC: EOC: Other PT Losses	-141	-121	-121	-138	-138	-127	-171
8	0	EOC: EOC: Other PT Losses	-128	-105	-105	-124	-124	-112	-162
8	1	EOC: EOC: Other PT Losses	-128	-132	-132	-128	-128	-130	-122
8	2	EOC: EOC: Other PT Losses	-128	-154	-154	-132	-132	-146	-89
9	0	EOC: EOC: Other PT Losses	-128	-154	-154	-132	-132	-146	-89
9	1	EOC: EOC: Other PT Losses	-128	-189	-189	-137	-137	-170	-37
9	2	EOC: EOC: Other PT Losses	-128	-195	-195	-138	-138	-175	-27
10	0	EOC: EOC: Other PT Losses	-128	-195	-195	-138	-138	-175	-27
10	1	EOC: EOC: Other PT Losses	-128	-173	-173	-135	-135	-160	-61
10	2	EOC: EOC: Other PT Losses	-129	-122	-122	-128	-128	-124	-139
11	0	EOC: EOC: Other PT Losses	-129	-122	-122	-128	-128	-124	-139
11	1	EOC: EOC: Other PT Losses	-129	-113	-113	-126	-126	-118	-152
11	2	EOC: EOC: Other PT Losses	-129	-103	-103	-125	-125	-111	-167
12	0	EOC: EOC: Other PT Losses	-129	-108	-109	-126	-126	-115	-160
12	1	EOC: EOC: Other PT Losses	-129	-109	-109	-126	-126	-115	-159
12	2	EOC: EOC: Other PT Losses	-129	-110	-110	-126	-126	-116	-157
13	0	EOC: EOC: Other PT Losses	-134	-112	-112	-131	-131	-118	-167
13	1	EOC: EOC: Other PT Losses	-134	-134	-134	-134	-134	-134	-133
13	2	EOC: EOC: Other PT Losses	-134	-153	-154	-137	-137	-148	-104
14	0	EOC: EOC: Other PT Losses	-134	-153	-154	-137	-137	-148	-104
14	1	EOC: EOC: Other PT Losses	-134	-192	-192	-143	-142	-174	-47
14	2	EOC: EOC: Other PT Losses	-134	-195	-195	-143	-143	-177	-43
15	0	EOC: EOC: Other PT Losses	-134	-195	-195	-143	-143	-177	-43
15	1	EOC: EOC: Other PT Losses	-134	-164	-164	-139	-139	-155	-90
15	2	EOC: EOC: Other PT Losses	-135	-99	-99	-129	-129	-110	-189
16	0	EOC: EOC: Other PT Losses	-135	-99	-99	-129	-129	-110	-189
16	1	EOC: EOC: Other PT Losses	-135	-89	-89	-128	-128	-103	-204
16	2	EOC: EOC: Other PT Losses	-135	-78	-78	-127	-126	-96	-219

MEMBER STRESSES

DECK & CANOPY MEMBERS
EOC **CASE B: LL ON MAIN SPAN ONLY**

(-) compression

σ_{t_allow} = 3sqrt(f'c) = 39.8 ksf
σ_{c_allow} = 0.45(f'c) = -550.8 ksf

			SERVICE III-CASE B						
Member	Station	Result Case	(P/A) @ Centroid (kips/ft²)	Normal Stress @ Point 1 (kips/ft²)	Normal Stress @ Point 2 (kips/ft²)	Normal Stress @ Point 3 (kips/ft²)	Normal Stress @ Point 4 (kips/ft²)	Normal Stress @ Point 5 (kips/ft²)	Normal Stress @ Point 6 (kips/ft²)
17	0	EOC: EOC: Other PT Losses	-137	-98	-98	-131	-131	-110	-195
17	1	EOC: EOC: Other PT Losses	-137	-88	-88	-130	-130	-103	-210
17	2	EOC: EOC: Other PT Losses	-137	-78	-78	-128	-128	-96	-225
18	0	EOC: EOC: Other PT Losses	-154	-92	-92	-145	-145	-111	-246
18	1	EOC: EOC: Other PT Losses	-154	-115	-115	-148	-148	-127	-212
18	2	EOC: EOC: Other PT Losses	-154	-136	-136	-151	-151	-141	-181
19	0	EOC: EOC: Other PT Losses	-154	-136	-136	-151	-151	-141	-181
19	1	EOC: EOC: Other PT Losses	-154	-199	-199	-161	-160	-185	-86
19	2	EOC: EOC: Other PT Losses	-154	-222	-222	-164	-164	-201	-52
20	0	EOC: EOC: Other PT Losses	-154	-222	-222	-164	-164	-201	-52
20	1	EOC: EOC: Other PT Losses	-154	-204	-205	-162	-162	-189	-79
20	2	EOC: EOC: Other PT Losses	-155	-144	-144	-153	-153	-149	-167
21	0	EOC: EOC: Other PT Losses	-155	-144	-144	-153	-153	-149	-167
21	1	EOC: EOC: Other PT Losses	-155	-129	-129	-151	-151	-139	-189
21	2	EOC: EOC: Other PT Losses	-154	-112	-112	-149	-149	-127	-213
22	0	EOC: EOC: Other PT Losses	-167	-138	-138	-164	-164	-149	-202
22	1	EOC: EOC: Other PT Losses	-167	-119	-120	-161	-161	-136	-231
22	2	EOC: EOC: Other PT Losses	-167	-101	-101	-158	-158	-123	-261
23	0	EOC: EOC: Other PT Losses	-184	-121	-121	-176	-176	-142	-269
23	1	EOC: EOC: Other PT Losses	-184	-136	-136	-178	-178	-152	-248
23	2	EOC: EOC: Other PT Losses	-184	-149	-150	-180	-179	-161	-228
24	0	EOC: EOC: Other PT Losses	-184	-149	-150	-180	-179	-161	-228
24	1	EOC: EOC: Other PT Losses	-184	-214	-214	-189	-188	-205	-139
24	2	EOC: EOC: Other PT Losses	-184	-227	-227	-191	-190	-214	-120
25	0	EOC: EOC: Other PT Losses	-184	-227	-227	-191	-190	-214	-120
25	1	EOC: EOC: Other PT Losses	-184	-192	-193	-185	-185	-190	-162
25	2	EOC: EOC: Other PT Losses	-184	-111	-112	-173	-173	-133	-274
26	0	EOC: EOC: Other PT Losses	-184	-111	-112	-173	-173	-133	-274
26	1	EOC: EOC: Other PT Losses	-184	-83	-83	-169	-169	-114	-314
26	2	EOC: EOC: Other PT Losses	-182	5	5	-154	-154	-52	-439
29	0	EOC: EOC: Other PT Losses	-106	1	1	-90	-91	-31	-244
29	1	EOC: EOC: Other PT Losses	-105	-51	-51	-97	-97	-67	-166
29	2	EOC: EOC: Other PT Losses	-105	-73	-72	-100	-100	-82	-137
30	0	EOC: EOC: Other PT Losses	-105	-73	-72	-100	-100	-82	-137
30	1	EOC: EOC: Other PT Losses	-105	-133	-132	-109	-109	-124	-57
30	2	EOC: EOC: Other PT Losses	-105	-156	-156	-112	-112	-140	-27
31	0	EOC: EOC: Other PT Losses	-105	-156	-156	-112	-112	-140	-27
31	1	EOC: EOC: Other PT Losses	-104	-142	-142	-110	-110	-131	-47
31	2	EOC: EOC: Other PT Losses	-104	-85	-84	-102	-103	-92	-122
32	0	EOC: EOC: Other PT Losses	-104	-85	-84	-102	-103	-92	-122
32	1	EOC: EOC: Other PT Losses	-104	-73	-73	-101	-101	-84	-137
32	2	EOC: EOC: Other PT Losses	-104	-61	-61	-99	-100	-76	-154
33	0	EOC: EOC: Other PT Losses	-96	-55	-55	-90	-91	-70	-149
33	1	EOC: EOC: Other PT Losses	-96	-58	-57	-91	-92	-72	-143
33	2	EOC: EOC: Other PT Losses	-96	-60	-60	-92	-92	-74	-137
34	0	EOC: EOC: Other PT Losses	-96	-53	-53	-90	-90	-69	-153
34	1	EOC: EOC: Other PT Losses	-96	-60	-60	-91	-91	-73	-144
34	2	EOC: EOC: Other PT Losses	-96	-66	-66	-92	-92	-77	-135

MEMBER STRESSES

DECK & CANOPY MEMBERS
EOC **CASE B: LL ON MAIN SPAN ONLY**

(-) compression

σ_{t_allow} = 3sqrt(f'c) = 39.8 ksf
σ_{c_allow} = 0.45(f'c) = -550.8 ksf

			SERVICE III-CASE B						
Member	Station	Result Case	(P/A) @ Centroid (kips/ft²)	Normal Stress @ Point 1 (kips/ft²)	Normal Stress @ Point 2 (kips/ft²)	Normal Stress @ Point 3 (kips/ft²)	Normal Stress @ Point 4 (kips/ft²)	Normal Stress @ Point 5 (kips/ft²)	Normal Stress @ Point 6 (kips/ft²)
35	0	EOC: EOC: Other PT Losses	-96	-66	-66	-92	-92	-77	-135
35	1	EOC: EOC: Other PT Losses	-96	-82	-82	-94	-94	-88	-112
35	2	EOC: EOC: Other PT Losses	-95	-95	-95	-95	-96	-96	-95
36	0	EOC: EOC: Other PT Losses	-95	-95	-95	-95	-96	-96	-95
36	1	EOC: EOC: Other PT Losses	-95	-104	-103	-96	-97	-101	-83
36	2	EOC: EOC: Other PT Losses	-95	-107	-107	-97	-97	-104	-78
37	0	EOC: EOC: Other PT Losses	-95	-107	-107	-97	-97	-104	-78
37	1	EOC: EOC: Other PT Losses	-95	-108	-107	-97	-97	-104	-77
37	2	EOC: EOC: Other PT Losses	-95	-107	-107	-97	-97	-103	-78
38	0	EOC: EOC: Other PT Losses	-89	-95	-95	-90	-90	-93	-81
38	1	EOC: EOC: Other PT Losses	-90	-98	-98	-91	-91	-96	-76
38	2	EOC: EOC: Other PT Losses	-90	-101	-101	-91	-91	-98	-72
39	0	EOC: EOC: Other PT Losses	-90	-90	-89	-90	-90	-90	-90
39	1	EOC: EOC: Other PT Losses	-90	-94	-93	-90	-90	-92	-84
39	2	EOC: EOC: Other PT Losses	-90	-97	-97	-91	-91	-95	-79
40	0	EOC: EOC: Other PT Losses	-90	-97	-97	-91	-91	-95	-79
40	1	EOC: EOC: Other PT Losses	-90	-106	-106	-92	-92	-101	-66
40	2	EOC: EOC: Other PT Losses	-90	-111	-111	-93	-93	-105	-58
41	0	EOC: EOC: Other PT Losses	-90	-111	-111	-93	-93	-105	-58
41	1	EOC: EOC: Other PT Losses	-90	-113	-113	-93	-93	-106	-55
41	2	EOC: EOC: Other PT Losses	-90	-112	-112	-93	-93	-105	-56
42	0	EOC: EOC: Other PT Losses	-90	-112	-112	-93	-93	-105	-56
42	1	EOC: EOC: Other PT Losses	-90	-110	-110	-92	-93	-104	-60
42	2	EOC: EOC: Other PT Losses	-90	-106	-106	-92	-92	-101	-65
43	0	EOC: EOC: Other PT Losses	-86	-99	-99	-88	-88	-96	-65
43	1	EOC: EOC: Other PT Losses	-86	-100	-100	-88	-88	-96	-64
43	2	EOC: EOC: Other PT Losses	-86	-102	-102	-88	-89	-97	-62
44	0	EOC: EOC: Other PT Losses	-86	-93	-93	-87	-88	-93	-71
44	1	EOC: EOC: Other PT Losses	-86	-97	-97	-88	-88	-96	-65
44	2	EOC: EOC: Other PT Losses	-86	-101	-101	-89	-89	-98	-59
45	0	EOC: EOC: Other PT Losses	-86	-101	-101	-89	-89	-98	-59
45	1	EOC: EOC: Other PT Losses	-86	-109	-109	-90	-90	-105	-46
45	2	EOC: EOC: Other PT Losses	-86	-115	-115	-91	-91	-109	-36
46	0	EOC: EOC: Other PT Losses	-86	-115	-115	-91	-91	-109	-36
46	1	EOC: EOC: Other PT Losses	-86	-118	-118	-91	-91	-111	-31
46	2	EOC: EOC: Other PT Losses	-86	-118	-118	-91	-91	-111	-30
47	0	EOC: EOC: Other PT Losses	-86	-118	-118	-91	-91	-111	-30
47	1	EOC: EOC: Other PT Losses	-86	-116	-116	-91	-91	-110	-32
47	2	EOC: EOC: Other PT Losses	-86	-113	-113	-91	-91	-108	-36
48	0	EOC: EOC: Other PT Losses	-87	-109	-109	-92	-92	-104	-35
48	1	EOC: EOC: Other PT Losses	-87	-110	-110	-92	-92	-105	-37
48	2	EOC: EOC: Other PT Losses	-87	-110	-110	-91	-92	-105	-38
49	0	EOC: EOC: Other PT Losses	-86	-105	-105	-91	-91	-101	-35
49	1	EOC: EOC: Other PT Losses	-86	-105	-105	-91	-91	-101	-37
49	2	EOC: EOC: Other PT Losses	-86	-104	-104	-91	-91	-101	-40
50	0	EOC: EOC: Other PT Losses	-86	-104	-104	-91	-91	-101	-40
50	1	EOC: EOC: Other PT Losses	-86	-101	-100	-90	-90	-98	-49
50	2	EOC: EOC: Other PT Losses	-86	-95	-94	-88	-88	-94	-63

MEMBER STRESSES

DECK & CANOPY MEMBERS
EOC **CASE B: LL ON MAIN SPAN ONLY**

(-) compression

σ_{t_allow} = 3sqrt(f'c) = 39.8 ksf
σ_{c_allow} = 0.45(f'c) = -550.8 ksf

			SERVICE III-CASE B						
Member	Station	Result Case	(P/A) @ Centroid (kips/ft²)	Normal Stress @ Point 1 (kips/ft²)	Normal Stress @ Point 2 (kips/ft²)	Normal Stress @ Point 3 (kips/ft²)	Normal Stress @ Point 4 (kips/ft²)	Normal Stress @ Point 5 (kips/ft²)	Normal Stress @ Point 6 (kips/ft²)
51	0	EOC: EOC: Other PT Losses	-86	-95	-94	-88	-88	-94	-63
51	1	EOC: EOC: Other PT Losses	-86	-86	-86	-87	-87	-88	-80
51	2	EOC: EOC: Other PT Losses	-86	-75	-75	-85	-85	-79	-101
52	0	EOC: EOC: Other PT Losses	-86	-75	-75	-85	-85	-79	-101
52	1	EOC: EOC: Other PT Losses	-86	-64	-64	-83	-83	-70	-120
52	2	EOC: EOC: Other PT Losses	-86	-49	-49	-80	-80	-60	-141
60	0	EOC: EOC: Other PT Losses	0	0	0	0	0	0	0
60	1	EOC: EOC: Other PT Losses	-175	7	7	-149	-149	-49	-449
60	2	EOC: EOC: Other PT Losses	-174	-42	-42	-155	-155	-82	-372
101	0	EOC: EOC: Other PT Losses	-203	-357	-357	-33	-33	-322	-171
101	1	EOC: EOC: Other PT Losses	-203	-224	-224	-179	-179	-219	-198
101	2	EOC: EOC: Other PT Losses	-207	-207	-207	-207	-207	-207	-207
102	0	EOC: EOC: Other PT Losses	-207	-207	-207	-207	-207	-207	-207
102	1	EOC: EOC: Other PT Losses	-210	-326	-326	-84	-84	-300	-187
102	2	EOC: EOC: Other PT Losses	-212	-272	-272	-146	-146	-259	-200
103	0	EOC: EOC: Other PT Losses	-212	-272	-272	-146	-146	-259	-200
103	1	EOC: EOC: Other PT Losses	-220	-259	-259	-176	-176	-251	-211
103	2	EOC: EOC: Other PT Losses	-220	-222	-222	-217	-217	-222	-219
104	0	EOC: EOC: Other PT Losses	-220	-222	-222	-217	-217	-222	-219
104	1	EOC: EOC: Other PT Losses	-220	-205	-205	-236	-236	-208	-223
104	2	EOC: EOC: Other PT Losses	-227	-187	-187	-270	-270	-196	-235
106	0	EOC: EOC: Other PT Losses	-311	-239	-239	-381	-381	-257	-324
106	1	EOC: EOC: Other PT Losses	-303	-248	-248	-356	-356	-262	-313
106	2	EOC: EOC: Other PT Losses	-303	-261	-261	-342	-343	-272	-310
107	0	EOC: EOC: Other PT Losses	-303	-261	-261	-342	-343	-272	-310
107	1	EOC: EOC: Other PT Losses	-303	-327	-327	-277	-277	-322	-298
107	2	EOC: EOC: Other PT Losses	-303	-354	-354	-247	-247	-343	-293
108	0	EOC: EOC: Other PT Losses	-303	-354	-354	-247	-247	-343	-293
108	1	EOC: EOC: Other PT Losses	-304	-352	-352	-251	-251	-341	-294
108	2	EOC: EOC: Other PT Losses	-304	-324	-324	-275	-275	-319	-300
109	0	EOC: EOC: Other PT Losses	-304	-324	-324	-275	-275	-319	-300
109	1	EOC: EOC: Other PT Losses	-304	-310	-310	-287	-287	-309	-302
109	2	EOC: EOC: Other PT Losses	-312	-298	-298	-314	-314	-301	-315
111	0	EOC: EOC: Other PT Losses	-343	-387	-386	-295	-295	-377	-334
111	1	EOC: EOC: Other PT Losses	-335	-387	-387	-278	-278	-375	-324
111	2	EOC: EOC: Other PT Losses	-335	-391	-391	-273	-273	-379	-323
112	0	EOC: EOC: Other PT Losses	-335	-391	-391	-273	-273	-379	-323
112	1	EOC: EOC: Other PT Losses	-335	-413	-413	-249	-249	-396	-319
112	2	EOC: EOC: Other PT Losses	-335	-401	-401	-263	-263	-386	-322
113	0	EOC: EOC: Other PT Losses	-335	-401	-401	-263	-263	-386	-322
113	1	EOC: EOC: Other PT Losses	-336	-358	-358	-311	-311	-353	-331
113	2	EOC: EOC: Other PT Losses	-336	-288	-288	-388	-388	-298	-346
114	0	EOC: EOC: Other PT Losses	-336	-288	-288	-388	-388	-298	-346
114	1	EOC: EOC: Other PT Losses	-336	-264	-264	-415	-415	-280	-351
114	2	EOC: EOC: Other PT Losses	-344	-243	-243	-456	-456	-265	-365
116	0	EOC: EOC: Other PT Losses	-331	-363	-363	-293	-293	-356	-324
116	1	EOC: EOC: Other PT Losses	-323	-362	-362	-278	-278	-353	-315
116	2	EOC: EOC: Other PT Losses	-323	-366	-366	-274	-274	-357	-314

MEMBER STRESSES

DECK & CANOPY MEMBERS
EOC **CASE B: LL ON MAIN SPAN ONLY**

(-) compression

σ_{t_allow} = 3sqrt(f'c) = 39.8 ksf
σ_{c_allow} = 0.45(f'c) = -550.8 ksf

			SERVICE III-CASE B						
Member	Station	Result Case	(P/A) @ Centroid (kips/ft²)	Normal Stress @ Point 1 (kips/ft²)	Normal Stress @ Point 2 (kips/ft²)	Normal Stress @ Point 3 (kips/ft²)	Normal Stress @ Point 4 (kips/ft²)	Normal Stress @ Point 5 (kips/ft²)	Normal Stress @ Point 6 (kips/ft²)
117	0	EOC: EOC: Other PT Losses	-323	-366	-366	-274	-274	-357	-314
117	1	EOC: EOC: Other PT Losses	-323	-385	-385	-255	-255	-371	-311
117	2	EOC: EOC: Other PT Losses	-324	-370	-370	-273	-273	-359	-314
118	0	EOC: EOC: Other PT Losses	-324	-370	-370	-273	-273	-359	-314
118	1	EOC: EOC: Other PT Losses	-324	-322	-322	-326	-326	-322	-324
118	2	EOC: EOC: Other PT Losses	-324	-244	-244	-412	-412	-262	-340
119	0	EOC: EOC: Other PT Losses	-324	-244	-244	-412	-412	-262	-340
119	1	EOC: EOC: Other PT Losses	-324	-225	-225	-433	-433	-247	-344
119	2	EOC: EOC: Other PT Losses	-332	-209	-209	-466	-466	-237	-357
121	0	EOC: EOC: Other PT Losses	-261	-275	-275	-236	-236	-273	-256
121	1	EOC: EOC: Other PT Losses	-254	-279	-279	-219	-219	-275	-248
121	2	EOC: EOC: Other PT Losses	-255	-287	-287	-212	-212	-281	-247
122	0	EOC: EOC: Other PT Losses	-255	-287	-287	-212	-212	-281	-247
122	1	EOC: EOC: Other PT Losses	-255	-312	-312	-191	-191	-300	-243
122	2	EOC: EOC: Other PT Losses	-255	-296	-296	-209	-209	-287	-246
123	0	EOC: EOC: Other PT Losses	-255	-296	-296	-209	-209	-287	-246
123	1	EOC: EOC: Other PT Losses	-255	-247	-247	-263	-263	-249	-256
123	2	EOC: EOC: Other PT Losses	-255	-165	-165	-347	-347	-185	-273
124	0	EOC: EOC: Other PT Losses	-255	-165	-165	-347	-347	-185	-273
124	1	EOC: EOC: Other PT Losses	-254	-152	-152	-359	-359	-175	-275
124	2	EOC: EOC: Other PT Losses	-260	-144	-144	-379	-379	-169	-284
126	0	EOC: EOC: Other PT Losses	-122	-195	-195	-42	-42	-179	-107
126	1	EOC: EOC: Other PT Losses	-119	-197	-197	-34	-34	-180	-103
126	2	EOC: EOC: Other PT Losses	-119	-199	-199	-32	-32	-181	-103
127	0	EOC: EOC: Other PT Losses	-119	-199	-199	-32	-32	-181	-103
127	1	EOC: EOC: Other PT Losses	-119	-185	-185	-47	-47	-171	-106
127	2	EOC: EOC: Other PT Losses	-119	-145	-145	-91	-91	-139	-114
128	0	EOC: EOC: Other PT Losses	-119	-145	-145	-91	-91	-139	-114
128	1	EOC: EOC: Other PT Losses	-119	-78	-78	-164	-164	-87	-128
133	0	EOC: EOC: Other PT Losses	-78	7	7	-170	-171	-12	-95
133	1	EOC: EOC: Other PT Losses	-77	-60	-59	-97	-97	-63	-81
133	2	EOC: EOC: Other PT Losses	-77	-101	-101	-51	-51	-95	-72
134	0	EOC: EOC: Other PT Losses	-77	-101	-101	-51	-51	-95	-72
134	1	EOC: EOC: Other PT Losses	-77	-115	-115	-35	-35	-107	-69
134	2	EOC: EOC: Other PT Losses	-77	-103	-102	-48	-48	-97	-71
135	0	EOC: EOC: Other PT Losses	-77	-103	-102	-48	-48	-97	-71
135	1	EOC: EOC: Other PT Losses	-77	-94	-94	-57	-58	-90	-73
135	2	EOC: EOC: Other PT Losses	-81	-90	-90	-70	-71	-88	-79
137	0	EOC: EOC: Other PT Losses	-156	-40	-40	-258	-258	-66	-177
137	1	EOC: EOC: Other PT Losses	-150	-47	-47	-241	-241	-70	-169
137	2	EOC: EOC: Other PT Losses	-150	-64	-64	-227	-227	-83	-166
138	0	EOC: EOC: Other PT Losses	-150	-64	-64	-227	-227	-83	-166
138	1	EOC: EOC: Other PT Losses	-150	-108	-108	-189	-189	-117	-159
138	2	EOC: EOC: Other PT Losses	-150	-147	-147	-153	-153	-148	-151
139	0	EOC: EOC: Other PT Losses	-150	-147	-147	-153	-153	-148	-151
139	1	EOC: EOC: Other PT Losses	-150	-174	-174	-111	-111	-169	-143
139	2	EOC: EOC: Other PT Losses	-150	-195	-195	-75	-76	-186	-136

MEMBER STRESSES

DECK & CANOPY MEMBERS
EOC **CASE B: LL ON MAIN SPAN ONLY**

(-) compression

σ_{t_allow} = 3sqrt(f'c) = 39.8 ksf
σ_{c_allow} = 0.45(f'c) = -550.8 ksf

			SERVICE III-CASE B						
Member	Station	Result Case	(P/A) @ Centroid (kips/ft²)	Normal Stress @ Point 1 (kips/ft²)	Normal Stress @ Point 2 (kips/ft²)	Normal Stress @ Point 3 (kips/ft²)	Normal Stress @ Point 4 (kips/ft²)	Normal Stress @ Point 5 (kips/ft²)	Normal Stress @ Point 6 (kips/ft²)
140	0	EOC: EOC: Other PT Losses	-150	-195	-195	-75	-76	-186	-136
140	1	EOC: EOC: Other PT Losses	-150	-199	-199	-69	-69	-188	-135
140	2	EOC: EOC: Other PT Losses	-156	-211	-211	-64	-64	-199	-139
142	0	EOC: EOC: Other PT Losses	-163	-124	-124	-206	-206	-133	-171
142	1	EOC: EOC: Other PT Losses	-157	-128	-128	-189	-189	-134	-163
142	2	EOC: EOC: Other PT Losses	-157	-139	-139	-176	-176	-143	-161
143	0	EOC: EOC: Other PT Losses	-157	-139	-139	-176	-176	-143	-161
143	1	EOC: EOC: Other PT Losses	-157	-159	-159	-155	-155	-158	-157
143	2	EOC: EOC: Other PT Losses	-157	-174	-174	-136	-137	-170	-153
144	0	EOC: EOC: Other PT Losses	-157	-174	-174	-136	-137	-170	-153
144	1	EOC: EOC: Other PT Losses	-157	-187	-187	-118	-118	-180	-151
144	2	EOC: EOC: Other PT Losses	-157	-194	-194	-105	-105	-185	-149
145	0	EOC: EOC: Other PT Losses	-157	-194	-194	-105	-105	-185	-149
145	1	EOC: EOC: Other PT Losses	-157	-193	-193	-105	-105	-185	-149
145	2	EOC: EOC: Other PT Losses	-163	-201	-201	-107	-107	-193	-155
147	0	EOC: EOC: Other PT Losses	-168	-110	-110	-227	-227	-123	-180
147	1	EOC: EOC: Other PT Losses	-161	-118	-118	-206	-206	-127	-170
147	2	EOC: EOC: Other PT Losses	-161	-134	-134	-188	-188	-140	-167
148	0	EOC: EOC: Other PT Losses	-161	-134	-134	-188	-188	-140	-167
148	1	EOC: EOC: Other PT Losses	-161	-159	-159	-161	-161	-160	-162
148	2	EOC: EOC: Other PT Losses	-161	-180	-180	-138	-138	-176	-158
149	0	EOC: EOC: Other PT Losses	-161	-180	-180	-138	-138	-176	-158
149	1	EOC: EOC: Other PT Losses	-161	-199	-199	-117	-117	-191	-153
149	2	EOC: EOC: Other PT Losses	-161	-213	-213	-102	-102	-202	-151
150	0	EOC: EOC: Other PT Losses	-161	-213	-213	-102	-102	-202	-151
150	1	EOC: EOC: Other PT Losses	-161	-214	-214	-101	-101	-203	-150
150	2	EOC: EOC: Other PT Losses	-167	-225	-225	-102	-102	-212	-156
152	0	EOC: EOC: Other PT Losses	-169	-144	-144	-163	-163	-150	-174
152	1	EOC: EOC: Other PT Losses	-162	-145	-145	-155	-155	-149	-166
152	2	EOC: EOC: Other PT Losses	-162	-155	-155	-150	-150	-157	-164
153	0	EOC: EOC: Other PT Losses	-162	-155	-155	-150	-150	-157	-164
153	1	EOC: EOC: Other PT Losses	-162	-167	-167	-148	-148	-166	-161
153	2	EOC: EOC: Other PT Losses	-162	-174	-174	-149	-149	-172	-160
154	0	EOC: EOC: Other PT Losses	-162	-174	-174	-149	-149	-172	-160
154	1	EOC: EOC: Other PT Losses	-162	-180	-180	-143	-143	-176	-159
154	2	EOC: EOC: Other PT Losses	-162	-174	-174	-143	-143	-173	-158
155	0	EOC: EOC: Other PT Losses	-162	-174	-174	-143	-143	-173	-158
155	1	EOC: EOC: Other PT Losses	-162	-168	-168	-146	-146	-168	-159
155	2	EOC: EOC: Other PT Losses	-168	-171	-171	-152	-152	-172	-165
157	0	EOC: EOC: Other PT Losses	-167	-90	-90	-216	-216	-107	-178
157	1	EOC: EOC: Other PT Losses	-159	-95	-95	-200	-200	-109	-168
157	2	EOC: EOC: Other PT Losses	-155	-109	-109	-182	-182	-119	-162
158	0	EOC: EOC: Other PT Losses	-155	-109	-109	-182	-182	-119	-162
158	1	EOC: EOC: Other PT Losses	-155	-184	-184	-118	-118	-177	-149
158	2	EOC: EOC: Other PT Losses	-155	-235	-235	-58	-58	-218	-137
159	0	EOC: EOC: Other PT Losses	-155	-235	-235	-58	-58	-218	-137
159	1	EOC: EOC: Other PT Losses	-151	-221	-221	-48	-48	-205	-132
159	2	EOC: EOC: Other PT Losses	-151	-187	-187	-67	-67	-179	-135

MEMBER STRESSES

DECK & CANOPY MEMBERS
EOC **CASE C: LL ON BACK SPAN ONLY**

(-) compression

σ_{t_allow} = 3sqrt(f'c) = 39.8 ksf
σ_{c_allow} = 0.45(f'c) = -550.8 ksf

			SERVICE III-CASE C						
Member	Station	Result Case	(P/A) @ Centroid (kips/ft²)	Normal Stress @ Point 1 (kips/ft²)	Normal Stress @ Point 2 (kips/ft²)	Normal Stress @ Point 3 (kips/ft²)	Normal Stress @ Point 4 (kips/ft²)	Normal Stress @ Point 5 (kips/ft²)	Normal Stress @ Point 6 (kips/ft²)
1	0	EOC: EOC: Other PT Losses	-172	-3	-3	-148	-148	-55	-426
1	1	EOC: EOC: Other PT Losses	-171	-10	-10	-147	-147	-59	-413
1	2	EOC: EOC: Other PT Losses	-171	-17	-17	-148	-148	-64	-401
2	0	EOC: EOC: Other PT Losses	-170	-17	-17	-148	-148	-64	-384
2	1	EOC: EOC: Other PT Losses	-170	-73	-73	-156	-156	-103	-306
2	2	EOC: EOC: Other PT Losses	-170	-129	-129	-165	-165	-142	-230
3	0	EOC: EOC: Other PT Losses	-136	-81	-81	-128	-128	-98	-218
3	1	EOC: EOC: Other PT Losses	-142	-165	-165	-146	-146	-158	-109
3	2	EOC: EOC: Other PT Losses	-142	-181	-181	-148	-148	-169	-85
4	0	EOC: EOC: Other PT Losses	-142	-181	-181	-148	-148	-169	-85
4	1	EOC: EOC: Other PT Losses	-142	-200	-200	-151	-151	-183	-56
4	2	EOC: EOC: Other PT Losses	-143	-199	-199	-151	-151	-182	-57
5	0	EOC: EOC: Other PT Losses	-143	-199	-199	-151	-151	-182	-57
5	1	EOC: EOC: Other PT Losses	-143	-178	-178	-148	-148	-168	-89
5	2	EOC: EOC: Other PT Losses	-143	-138	-138	-142	-142	-139	-151
6	0	EOC: EOC: Other PT Losses	-143	-138	-138	-142	-142	-139	-151
6	1	EOC: EOC: Other PT Losses	-143	-130	-130	-141	-141	-134	-161
6	2	EOC: EOC: Other PT Losses	-143	-123	-123	-140	-140	-129	-172
7	0	EOC: EOC: Other PT Losses	-146	-115	-115	-142	-142	-125	-193
7	1	EOC: EOC: Other PT Losses	-146	-125	-125	-143	-143	-132	-178
7	2	EOC: EOC: Other PT Losses	-146	-135	-135	-145	-145	-138	-163
8	0	EOC: EOC: Other PT Losses	-135	-122	-122	-133	-133	-126	-156
8	1	EOC: EOC: Other PT Losses	-135	-143	-143	-137	-137	-140	-125
8	2	EOC: EOC: Other PT Losses	-135	-160	-160	-139	-139	-153	-99
9	0	EOC: EOC: Other PT Losses	-135	-160	-160	-139	-139	-153	-99
9	1	EOC: EOC: Other PT Losses	-136	-187	-187	-143	-143	-172	-58
9	2	EOC: EOC: Other PT Losses	-136	-192	-192	-144	-144	-175	-51
10	0	EOC: EOC: Other PT Losses	-136	-192	-192	-144	-144	-175	-51
10	1	EOC: EOC: Other PT Losses	-136	-174	-174	-142	-142	-163	-78
10	2	EOC: EOC: Other PT Losses	-136	-134	-134	-136	-136	-135	-140
11	0	EOC: EOC: Other PT Losses	-136	-134	-134	-136	-136	-135	-140
11	1	EOC: EOC: Other PT Losses	-136	-127	-127	-135	-135	-130	-151
11	2	EOC: EOC: Other PT Losses	-136	-119	-119	-134	-134	-124	-162
12	0	EOC: EOC: Other PT Losses	-136	-125	-125	-135	-135	-129	-154
12	1	EOC: EOC: Other PT Losses	-136	-125	-125	-135	-135	-129	-153
12	2	EOC: EOC: Other PT Losses	-136	-125	-125	-135	-135	-129	-153
13	0	EOC: EOC: Other PT Losses	-141	-127	-127	-139	-139	-131	-161
13	1	EOC: EOC: Other PT Losses	-141	-145	-145	-141	-141	-144	-135
13	2	EOC: EOC: Other PT Losses	-141	-160	-160	-144	-144	-154	-112
14	0	EOC: EOC: Other PT Losses	-141	-160	-160	-144	-144	-154	-112
14	1	EOC: EOC: Other PT Losses	-141	-189	-189	-148	-148	-175	-69
14	2	EOC: EOC: Other PT Losses	-141	-192	-192	-149	-149	-176	-66
15	0	EOC: EOC: Other PT Losses	-141	-192	-192	-149	-149	-176	-66
15	1	EOC: EOC: Other PT Losses	-142	-167	-167	-145	-145	-159	-104
15	2	EOC: EOC: Other PT Losses	-142	-115	-115	-138	-138	-123	-183
16	0	EOC: EOC: Other PT Losses	-142	-115	-115	-138	-138	-123	-183
16	1	EOC: EOC: Other PT Losses	-142	-107	-107	-137	-137	-117	-194
16	2	EOC: EOC: Other PT Losses	-142	-99	-99	-135	-135	-112	-207

MEMBER STRESSES

DECK & CANOPY MEMBERS
EOC **CASE C: LL ON BACK SPAN ONLY**

(-) compression

σ_{t_allow} = 3sqrt(f'c) = 39.8 ksf
σ_{c_allow} = 0.45(f'c) = -550.8 ksf

			SERVICE III-CASE C						
Member	Station	Result Case	(P/A) @ Centroid (kips/ft²)	Normal Stress @ Point 1 (kips/ft²)	Normal Stress @ Point 2 (kips/ft²)	Normal Stress @ Point 3 (kips/ft²)	Normal Stress @ Point 4 (kips/ft²)	Normal Stress @ Point 5 (kips/ft²)	Normal Stress @ Point 6 (kips/ft²)
17	0	EOC: EOC: Other PT Losses	-144	-117	-117	-140	-140	-125	-185
17	1	EOC: EOC: Other PT Losses	-144	-108	-108	-139	-139	-119	-198
17	2	EOC: EOC: Other PT Losses	-144	-99	-99	-137	-137	-112	-211
18	0	EOC: EOC: Other PT Losses	-159	-111	-111	-152	-152	-125	-230
18	1	EOC: EOC: Other PT Losses	-158	-129	-129	-154	-154	-138	-203
18	2	EOC: EOC: Other PT Losses	-158	-145	-145	-156	-156	-149	-178
19	0	EOC: EOC: Other PT Losses	-158	-145	-145	-156	-156	-149	-178
19	1	EOC: EOC: Other PT Losses	-159	-196	-196	-164	-164	-185	-102
19	2	EOC: EOC: Other PT Losses	-159	-215	-215	-167	-167	-198	-74
20	0	EOC: EOC: Other PT Losses	-159	-215	-215	-167	-167	-198	-74
20	1	EOC: EOC: Other PT Losses	-159	-203	-203	-165	-165	-189	-94
20	2	EOC: EOC: Other PT Losses	-159	-155	-155	-159	-159	-158	-162
21	0	EOC: EOC: Other PT Losses	-159	-155	-155	-159	-159	-158	-162
21	1	EOC: EOC: Other PT Losses	-159	-144	-144	-157	-157	-150	-179
21	2	EOC: EOC: Other PT Losses	-159	-131	-131	-155	-155	-142	-197
22	0	EOC: EOC: Other PT Losses	-171	-153	-153	-169	-169	-160	-187
22	1	EOC: EOC: Other PT Losses	-171	-137	-137	-167	-167	-149	-213
22	2	EOC: EOC: Other PT Losses	-170	-122	-122	-164	-164	-138	-240
23	0	EOC: EOC: Other PT Losses	-185	-138	-138	-179	-179	-154	-246
23	1	EOC: EOC: Other PT Losses	-185	-149	-149	-181	-181	-162	-230
23	2	EOC: EOC: Other PT Losses	-185	-160	-160	-182	-182	-169	-215
24	0	EOC: EOC: Other PT Losses	-185	-160	-160	-182	-182	-169	-215
24	1	EOC: EOC: Other PT Losses	-185	-210	-210	-189	-189	-202	-148
24	2	EOC: EOC: Other PT Losses	-185	-218	-218	-190	-190	-208	-136
25	0	EOC: EOC: Other PT Losses	-185	-218	-218	-190	-190	-208	-136
25	1	EOC: EOC: Other PT Losses	-185	-189	-189	-186	-186	-188	-171
25	2	EOC: EOC: Other PT Losses	-185	-123	-123	-176	-176	-142	-260
26	0	EOC: EOC: Other PT Losses	-185	-123	-123	-176	-176	-142	-260
26	1	EOC: EOC: Other PT Losses	-185	-100	-100	-172	-172	-126	-292
26	2	EOC: EOC: Other PT Losses	-183	-18	-18	-159	-159	-68	-407
29	0	EOC: EOC: Other PT Losses	-101	26	27	-82	-83	-12	-270
29	1	EOC: EOC: Other PT Losses	-100	-32	-31	-90	-90	-52	-183
29	2	EOC: EOC: Other PT Losses	-100	-59	-59	-94	-94	-71	-145
30	0	EOC: EOC: Other PT Losses	-100	-59	-59	-94	-94	-71	-145
30	1	EOC: EOC: Other PT Losses	-100	-136	-135	-105	-105	-124	-41
30	2	EOC: EOC: Other PT Losses	-100	-165	-164	-109	-109	-145	-2
31	0	EOC: EOC: Other PT Losses	-100	-165	-164	-109	-109	-145	-2
31	1	EOC: EOC: Other PT Losses	-99	-147	-147	-106	-107	-133	-27
31	2	EOC: EOC: Other PT Losses	-99	-76	-75	-97	-97	-85	-123
32	0	EOC: EOC: Other PT Losses	-99	-76	-75	-97	-97	-85	-123
32	1	EOC: EOC: Other PT Losses	-99	-61	-61	-95	-95	-75	-143
32	2	EOC: EOC: Other PT Losses	-99	-46	-46	-93	-93	-64	-164
33	0	EOC: EOC: Other PT Losses	-90	-40	-40	-83	-84	-58	-156
33	1	EOC: EOC: Other PT Losses	-90	-43	-43	-84	-85	-60	-150
33	2	EOC: EOC: Other PT Losses	-90	-46	-46	-85	-85	-62	-144
34	0	EOC: EOC: Other PT Losses	-90	-39	-39	-83	-83	-57	-159
34	1	EOC: EOC: Other PT Losses	-90	-48	-47	-84	-84	-63	-148
34	2	EOC: EOC: Other PT Losses	-90	-55	-55	-85	-85	-68	-137

MEMBER STRESSES

DECK & CANOPY MEMBERS
EOC **CASE C: LL ON BACK SPAN ONLY**

(-) compression

σ_{t_allow} = 3sqrt(f'c) = 39.8 ksf
σ_{c_allow} = 0.45(f'c) = -550.8 ksf

			SERVICE III-CASE C						
Member	Station	Result Case	(P/A) @ Centroid (kips/ft²)	Normal Stress @ Point 1 (kips/ft²)	Normal Stress @ Point 2 (kips/ft²)	Normal Stress @ Point 3 (kips/ft²)	Normal Stress @ Point 4 (kips/ft²)	Normal Stress @ Point 5 (kips/ft²)	Normal Stress @ Point 6 (kips/ft²)
35	0	EOC: EOC: Other PT Losses	-90	-55	-55	-85	-85	-68	-137
35	1	EOC: EOC: Other PT Losses	-90	-75	-75	-88	-88	-81	-108
35	2	EOC: EOC: Other PT Losses	-90	-90	-90	-90	-90	-91	-87
36	0	EOC: EOC: Other PT Losses	-90	-90	-90	-90	-90	-91	-87
36	1	EOC: EOC: Other PT Losses	-90	-101	-100	-91	-91	-97	-73
36	2	EOC: EOC: Other PT Losses	-90	-105	-104	-92	-92	-100	-67
37	0	EOC: EOC: Other PT Losses	-90	-105	-104	-92	-92	-100	-67
37	1	EOC: EOC: Other PT Losses	-90	-105	-105	-92	-92	-100	-67
37	2	EOC: EOC: Other PT Losses	-90	-104	-104	-92	-92	-100	-68
38	0	EOC: EOC: Other PT Losses	-84	-93	-93	-85	-86	-90	-71
38	1	EOC: EOC: Other PT Losses	-84	-96	-95	-86	-86	-92	-67
38	2	EOC: EOC: Other PT Losses	-84	-98	-98	-86	-86	-94	-63
39	0	EOC: EOC: Other PT Losses	-84	-88	-87	-85	-85	-87	-79
39	1	EOC: EOC: Other PT Losses	-84	-92	-92	-85	-86	-90	-72
39	2	EOC: EOC: Other PT Losses	-84	-97	-96	-86	-86	-93	-66
40	0	EOC: EOC: Other PT Losses	-84	-97	-96	-86	-86	-93	-66
40	1	EOC: EOC: Other PT Losses	-84	-106	-106	-87	-88	-100	-51
40	2	EOC: EOC: Other PT Losses	-84	-112	-112	-88	-88	-103	-43
41	0	EOC: EOC: Other PT Losses	-84	-112	-112	-88	-88	-103	-43
41	1	EOC: EOC: Other PT Losses	-84	-113	-113	-88	-89	-104	-40
41	2	EOC: EOC: Other PT Losses	-84	-111	-111	-88	-88	-103	-44
42	0	EOC: EOC: Other PT Losses	-84	-111	-111	-88	-88	-103	-44
42	1	EOC: EOC: Other PT Losses	-84	-107	-107	-87	-88	-100	-50
42	2	EOC: EOC: Other PT Losses	-84	-102	-102	-87	-87	-97	-57
43	0	EOC: EOC: Other PT Losses	-82	-97	-97	-84	-84	-93	-57
43	1	EOC: EOC: Other PT Losses	-82	-98	-98	-84	-84	-93	-56
43	2	EOC: EOC: Other PT Losses	-82	-99	-99	-84	-84	-94	-56
44	0	EOC: EOC: Other PT Losses	-81	-92	-92	-83	-83	-91	-60
44	1	EOC: EOC: Other PT Losses	-81	-97	-97	-84	-84	-94	-53
44	2	EOC: EOC: Other PT Losses	-81	-102	-101	-85	-85	-98	-46
45	0	EOC: EOC: Other PT Losses	-81	-102	-101	-85	-85	-98	-46
45	1	EOC: EOC: Other PT Losses	-81	-111	-111	-86	-86	-105	-31
45	2	EOC: EOC: Other PT Losses	-81	-117	-117	-87	-87	-109	-21
46	0	EOC: EOC: Other PT Losses	-81	-117	-117	-87	-87	-109	-21
46	1	EOC: EOC: Other PT Losses	-81	-120	-120	-87	-87	-111	-16
46	2	EOC: EOC: Other PT Losses	-81	-119	-119	-87	-87	-110	-17
47	0	EOC: EOC: Other PT Losses	-81	-119	-119	-87	-87	-110	-17
47	1	EOC: EOC: Other PT Losses	-81	-116	-116	-87	-87	-108	-21
47	2	EOC: EOC: Other PT Losses	-81	-112	-111	-86	-86	-105	-27
48	0	EOC: EOC: Other PT Losses	-84	-112	-112	-90	-90	-105	-25
48	1	EOC: EOC: Other PT Losses	-84	-111	-111	-89	-90	-105	-28
48	2	EOC: EOC: Other PT Losses	-84	-111	-111	-89	-89	-104	-30
49	0	EOC: EOC: Other PT Losses	-83	-110	-110	-89	-89	-103	-20
49	1	EOC: EOC: Other PT Losses	-83	-109	-109	-89	-89	-103	-22
49	2	EOC: EOC: Other PT Losses	-83	-108	-108	-88	-89	-102	-25
50	0	EOC: EOC: Other PT Losses	-83	-108	-108	-88	-89	-102	-25
50	1	EOC: EOC: Other PT Losses	-83	-103	-103	-87	-87	-99	-37
50	2	EOC: EOC: Other PT Losses	-83	-95	-95	-86	-86	-93	-54

MEMBER STRESSES

DECK & CANOPY MEMBERS
EOC **CASE C: LL ON BACK SPAN ONLY**

(-) compression

σ_{t_allow} = 3sqrt(f'c) = 39.8 ksf
σ_{c_allow} = 0.45(f'c) = -550.8 ksf

			SERVICE III-CASE C						
Member	Station	Result Case	(P/A) @ Centroid (kips/ft²)	Normal Stress @ Point 1 (kips/ft²)	Normal Stress @ Point 2 (kips/ft²)	Normal Stress @ Point 3 (kips/ft²)	Normal Stress @ Point 4 (kips/ft²)	Normal Stress @ Point 5 (kips/ft²)	Normal Stress @ Point 6 (kips/ft²)
51	0	EOC: EOC: Other PT Losses	-83	-95	-95	-86	-86	-93	-54
51	1	EOC: EOC: Other PT Losses	-83	-84	-84	-83	-84	-85	-75
51	2	EOC: EOC: Other PT Losses	-83	-69	-69	-81	-81	-74	-101
52	0	EOC: EOC: Other PT Losses	-83	-69	-69	-81	-81	-74	-101
52	1	EOC: EOC: Other PT Losses	-83	-55	-55	-79	-79	-63	-125
52	2	EOC: EOC: Other PT Losses	-82	-36	-36	-76	-76	-50	-152
60	0	EOC: EOC: Other PT Losses	0	0	0	0	0	0	0
60	1	EOC: EOC: Other PT Losses	-175	7	7	-149	-149	-49	-449
60	2	EOC: EOC: Other PT Losses	-174	-42	-42	-155	-155	-82	-372
101	0	EOC: EOC: Other PT Losses	-203	-357	-357	-33	-33	-322	-171
101	1	EOC: EOC: Other PT Losses	-203	-224	-224	-179	-179	-219	-198
101	2	EOC: EOC: Other PT Losses	-207	-207	-207	-207	-207	-207	-207
102	0	EOC: EOC: Other PT Losses	-207	-207	-207	-207	-207	-207	-207
102	1	EOC: EOC: Other PT Losses	-210	-326	-326	-84	-84	-300	-187
102	2	EOC: EOC: Other PT Losses	-212	-272	-272	-146	-146	-259	-200
103	0	EOC: EOC: Other PT Losses	-212	-272	-272	-146	-146	-259	-200
103	1	EOC: EOC: Other PT Losses	-220	-259	-259	-176	-176	-251	-211
103	2	EOC: EOC: Other PT Losses	-220	-222	-222	-217	-217	-222	-219
104	0	EOC: EOC: Other PT Losses	-220	-222	-222	-217	-217	-222	-219
104	1	EOC: EOC: Other PT Losses	-220	-205	-205	-236	-236	-208	-223
104	2	EOC: EOC: Other PT Losses	-227	-187	-187	-270	-270	-196	-235
106	0	EOC: EOC: Other PT Losses	-296	-246	-246	-342	-342	-259	-305
106	1	EOC: EOC: Other PT Losses	-288	-253	-253	-319	-319	-263	-294
106	2	EOC: EOC: Other PT Losses	-288	-265	-265	-307	-307	-272	-292
107	0	EOC: EOC: Other PT Losses	-288	-265	-265	-307	-307	-272	-292
107	1	EOC: EOC: Other PT Losses	-288	-322	-322	-252	-252	-314	-281
107	2	EOC: EOC: Other PT Losses	-288	-341	-341	-231	-231	-329	-278
108	0	EOC: EOC: Other PT Losses	-288	-341	-341	-231	-231	-329	-278
108	1	EOC: EOC: Other PT Losses	-289	-330	-329	-244	-244	-320	-280
108	2	EOC: EOC: Other PT Losses	-289	-293	-293	-277	-277	-292	-288
109	0	EOC: EOC: Other PT Losses	-289	-293	-293	-277	-277	-292	-288
109	1	EOC: EOC: Other PT Losses	-289	-276	-276	-293	-293	-279	-291
109	2	EOC: EOC: Other PT Losses	-297	-262	-261	-323	-323	-269	-304
111	0	EOC: EOC: Other PT Losses	-322	-358	-358	-282	-282	-350	-315
111	1	EOC: EOC: Other PT Losses	-314	-359	-358	-265	-265	-349	-305
111	2	EOC: EOC: Other PT Losses	-314	-364	-364	-259	-259	-353	-304
112	0	EOC: EOC: Other PT Losses	-314	-364	-364	-259	-259	-353	-304
112	1	EOC: EOC: Other PT Losses	-314	-387	-387	-235	-235	-370	-299
112	2	EOC: EOC: Other PT Losses	-314	-375	-375	-247	-247	-362	-302
113	0	EOC: EOC: Other PT Losses	-314	-375	-375	-247	-247	-362	-302
113	1	EOC: EOC: Other PT Losses	-315	-334	-334	-294	-294	-329	-311
113	2	EOC: EOC: Other PT Losses	-315	-264	-264	-370	-370	-276	-325
114	0	EOC: EOC: Other PT Losses	-315	-264	-264	-370	-370	-276	-325
114	1	EOC: EOC: Other PT Losses	-315	-241	-241	-396	-396	-257	-330
114	2	EOC: EOC: Other PT Losses	-323	-220	-220	-436	-437	-243	-344
116	0	EOC: EOC: Other PT Losses	-310	-334	-334	-281	-281	-329	-305
116	1	EOC: EOC: Other PT Losses	-302	-334	-334	-265	-265	-327	-296
116	2	EOC: EOC: Other PT Losses	-302	-339	-339	-260	-261	-331	-295

MEMBER STRESSES

DECK & CANOPY MEMBERS
EOC **CASE C: LL ON BACK SPAN ONLY**

(-) compression

σ_{t_allow} = 3sqrt(f'c) = 39.8 ksf
σ_{c_allow} = 0.45(f'c) = -550.8 ksf

			SERVICE III-CASE C						
Member	Station	Result Case	(P/A) @ Centroid (kips/ft²)	Normal Stress @ Point 1 (kips/ft²)	Normal Stress @ Point 2 (kips/ft²)	Normal Stress @ Point 3 (kips/ft²)	Normal Stress @ Point 4 (kips/ft²)	Normal Stress @ Point 5 (kips/ft²)	Normal Stress @ Point 6 (kips/ft²)
117	0	EOC: EOC: Other PT Losses	-302	-339	-339	-260	-261	-331	-295
117	1	EOC: EOC: Other PT Losses	-303	-360	-360	-239	-239	-347	-291
117	2	EOC: EOC: Other PT Losses	-303	-347	-347	-254	-254	-337	-294
118	0	EOC: EOC: Other PT Losses	-303	-347	-347	-254	-254	-337	-294
118	1	EOC: EOC: Other PT Losses	-303	-302	-302	-305	-305	-302	-303
118	2	EOC: EOC: Other PT Losses	-303	-226	-226	-388	-388	-243	-319
119	0	EOC: EOC: Other PT Losses	-303	-226	-226	-388	-388	-243	-319
119	1	EOC: EOC: Other PT Losses	-303	-208	-208	-408	-408	-229	-323
119	2	EOC: EOC: Other PT Losses	-311	-193	-193	-441	-441	-219	-335
121	0	EOC: EOC: Other PT Losses	-248	-255	-255	-232	-232	-255	-245
121	1	EOC: EOC: Other PT Losses	-242	-259	-259	-214	-214	-257	-236
121	2	EOC: EOC: Other PT Losses	-242	-267	-267	-207	-207	-263	-235
122	0	EOC: EOC: Other PT Losses	-242	-267	-267	-207	-207	-263	-235
122	1	EOC: EOC: Other PT Losses	-242	-295	-295	-183	-183	-284	-231
122	2	EOC: EOC: Other PT Losses	-242	-282	-282	-197	-198	-273	-233
123	0	EOC: EOC: Other PT Losses	-242	-282	-282	-197	-198	-273	-233
123	1	EOC: EOC: Other PT Losses	-242	-236	-236	-248	-248	-237	-243
123	2	EOC: EOC: Other PT Losses	-242	-156	-156	-329	-329	-175	-259
124	0	EOC: EOC: Other PT Losses	-242	-156	-156	-329	-329	-175	-259
124	1	EOC: EOC: Other PT Losses	-242	-144	-144	-341	-341	-166	-262
124	2	EOC: EOC: Other PT Losses	-247	-136	-136	-360	-360	-161	-270
126	0	EOC: EOC: Other PT Losses	-124	-182	-182	-59	-59	-169	-111
126	1	EOC: EOC: Other PT Losses	-120	-185	-185	-49	-49	-171	-107
126	2	EOC: EOC: Other PT Losses	-120	-189	-189	-45	-45	-174	-106
127	0	EOC: EOC: Other PT Losses	-120	-189	-189	-45	-45	-174	-106
127	1	EOC: EOC: Other PT Losses	-120	-181	-181	-54	-54	-167	-108
127	2	EOC: EOC: Other PT Losses	-120	-146	-146	-92	-92	-140	-115
128	0	EOC: EOC: Other PT Losses	-120	-146	-146	-92	-92	-140	-115
128	1	EOC: EOC: Other PT Losses	-120	-85	-85	-159	-159	-93	-127
133	0	EOC: EOC: Other PT Losses	-83	6	6	-181	-182	-14	-102
133	1	EOC: EOC: Other PT Losses	-83	-63	-63	-105	-105	-68	-87
133	2	EOC: EOC: Other PT Losses	-83	-107	-107	-56	-56	-102	-78
134	0	EOC: EOC: Other PT Losses	-83	-107	-107	-56	-56	-102	-78
134	1	EOC: EOC: Other PT Losses	-83	-124	-124	-37	-37	-115	-74
134	2	EOC: EOC: Other PT Losses	-82	-115	-114	-47	-47	-107	-76
135	0	EOC: EOC: Other PT Losses	-82	-115	-114	-47	-47	-107	-76
135	1	EOC: EOC: Other PT Losses	-82	-107	-107	-55	-56	-101	-77
135	2	EOC: EOC: Other PT Losses	-86	-103	-103	-68	-68	-100	-83
137	0	EOC: EOC: Other PT Losses	-170	-53	-52	-272	-272	-79	-190
137	1	EOC: EOC: Other PT Losses	-164	-61	-61	-255	-255	-84	-182
137	2	EOC: EOC: Other PT Losses	-164	-78	-78	-240	-240	-97	-179
138	0	EOC: EOC: Other PT Losses	-164	-78	-78	-240	-240	-97	-179
138	1	EOC: EOC: Other PT Losses	-164	-124	-124	-201	-201	-133	-172
138	2	EOC: EOC: Other PT Losses	-164	-164	-164	-162	-163	-164	-164
139	0	EOC: EOC: Other PT Losses	-164	-164	-164	-162	-163	-164	-164
139	1	EOC: EOC: Other PT Losses	-164	-193	-193	-118	-118	-187	-155
139	2	EOC: EOC: Other PT Losses	-164	-216	-216	-81	-81	-205	-148

MEMBER STRESSES

DECK & CANOPY MEMBERS
EOC **CASE C: LL ON BACK SPAN ONLY**

(-) compression

σ_{t_allow} = 3sqrt(f'c) = 39.8 ksf
σ_{c_allow} = 0.45(f'c) = -550.8 ksf

			SERVICE III-CASE C						
Member	Station	Result Case	(P/A) @ Centroid (kips/ft²)	Normal Stress @ Point 1 (kips/ft²)	Normal Stress @ Point 2 (kips/ft²)	Normal Stress @ Point 3 (kips/ft²)	Normal Stress @ Point 4 (kips/ft²)	Normal Stress @ Point 5 (kips/ft²)	Normal Stress @ Point 6 (kips/ft²)
140	0	EOC: EOC: Other PT Losses	-164	-216	-216	-81	-81	-205	-148
140	1	EOC: EOC: Other PT Losses	-164	-220	-220	-74	-74	-208	-147
140	2	EOC: EOC: Other PT Losses	-169	-232	-232	-69	-69	-219	-151
142	0	EOC: EOC: Other PT Losses	-176	-149	-149	-206	-206	-155	-182
142	1	EOC: EOC: Other PT Losses	-170	-151	-151	-190	-190	-155	-174
142	2	EOC: EOC: Other PT Losses	-170	-162	-162	-178	-178	-164	-171
143	0	EOC: EOC: Other PT Losses	-170	-162	-162	-178	-178	-164	-171
143	1	EOC: EOC: Other PT Losses	-170	-179	-179	-160	-160	-177	-168
143	2	EOC: EOC: Other PT Losses	-170	-192	-192	-144	-144	-187	-165
144	0	EOC: EOC: Other PT Losses	-170	-192	-192	-144	-144	-187	-165
144	1	EOC: EOC: Other PT Losses	-170	-202	-202	-127	-127	-195	-163
144	2	EOC: EOC: Other PT Losses	-170	-207	-207	-117	-118	-198	-162
145	0	EOC: EOC: Other PT Losses	-170	-207	-207	-117	-118	-198	-162
145	1	EOC: EOC: Other PT Losses	-170	-205	-205	-118	-118	-197	-162
145	2	EOC: EOC: Other PT Losses	-176	-213	-213	-121	-121	-205	-168
147	0	EOC: EOC: Other PT Losses	-178	-135	-135	-222	-222	-145	-187
147	1	EOC: EOC: Other PT Losses	-172	-141	-141	-202	-202	-148	-178
147	2	EOC: EOC: Other PT Losses	-172	-156	-156	-186	-186	-160	-175
148	0	EOC: EOC: Other PT Losses	-172	-156	-156	-186	-186	-160	-175
148	1	EOC: EOC: Other PT Losses	-172	-178	-178	-162	-162	-177	-171
148	2	EOC: EOC: Other PT Losses	-172	-196	-196	-143	-143	-190	-167
149	0	EOC: EOC: Other PT Losses	-172	-196	-196	-143	-143	-190	-167
149	1	EOC: EOC: Other PT Losses	-172	-212	-212	-126	-126	-203	-164
149	2	EOC: EOC: Other PT Losses	-172	-222	-222	-115	-115	-211	-161
150	0	EOC: EOC: Other PT Losses	-172	-222	-222	-115	-115	-211	-161
150	1	EOC: EOC: Other PT Losses	-172	-222	-222	-115	-115	-211	-161
150	2	EOC: EOC: Other PT Losses	-178	-232	-232	-117	-117	-220	-167
152	0	EOC: EOC: Other PT Losses	-175	-179	-179	-139	-139	-178	-175
152	1	EOC: EOC: Other PT Losses	-169	-175	-175	-136	-136	-174	-168
152	2	EOC: EOC: Other PT Losses	-169	-179	-179	-138	-138	-177	-167
153	0	EOC: EOC: Other PT Losses	-169	-179	-179	-138	-138	-177	-167
153	1	EOC: EOC: Other PT Losses	-169	-182	-182	-145	-145	-179	-166
153	2	EOC: EOC: Other PT Losses	-169	-181	-181	-155	-155	-178	-166
154	0	EOC: EOC: Other PT Losses	-169	-181	-181	-155	-155	-178	-166
154	1	EOC: EOC: Other PT Losses	-169	-177	-177	-160	-160	-175	-167
154	2	EOC: EOC: Other PT Losses	-169	-161	-161	-170	-170	-165	-169
155	0	EOC: EOC: Other PT Losses	-169	-161	-161	-170	-170	-165	-169
155	1	EOC: EOC: Other PT Losses	-169	-152	-152	-176	-176	-158	-170
155	2	EOC: EOC: Other PT Losses	-175	-153	-153	-185	-185	-160	-177
157	0	EOC: EOC: Other PT Losses	-168	-103	-103	-204	-204	-117	-176
157	1	EOC: EOC: Other PT Losses	-160	-106	-106	-190	-190	-118	-167
157	2	EOC: EOC: Other PT Losses	-156	-117	-117	-174	-174	-126	-161
158	0	EOC: EOC: Other PT Losses	-156	-117	-117	-174	-174	-126	-161
158	1	EOC: EOC: Other PT Losses	-156	-186	-186	-117	-117	-179	-149
158	2	EOC: EOC: Other PT Losses	-156	-231	-231	-64	-64	-215	-138
159	0	EOC: EOC: Other PT Losses	-156	-231	-231	-64	-64	-215	-138
159	1	EOC: EOC: Other PT Losses	-152	-210	-210	-61	-61	-197	-135
159	2	EOC: EOC: Other PT Losses	-152	-169	-169	-88	-88	-166	-140

MEMBER STRESSES

DECK & CANOPY MEMBERS
D10K

(-) compression

			SELWEIGHT (DC)						
Member	Station	Result Case	(P/A) @ Centroid (kips/ft²)	Normal Stress @ Point 1 (kips/ft²)	Normal Stress @ Point 2 (kips/ft²)	Normal Stress @ Point 3 (kips/ft²)	Normal Stress @ Point 4 (kips/ft²)	Normal Stress @ Point 5 (kips/ft²)	Normal Stress @ Point 6 (kips/ft²)
1	0	D10K: D10K: Other PT Losses	-0.07	-1.80	-1.80	-0.33	-0.33	-1.27	2.52
1	1	D10K: D10K: Other PT Losses	-0.07	-1.11	-1.11	-0.23	-0.23	-0.80	1.49
1	2	D10K: D10K: Other PT Losses	-0.07	-0.42	-0.42	-0.12	-0.12	-0.31	0.44
2	0	D10K: D10K: Other PT Losses	-0.79	5.52	5.52	0.13	0.13	3.61	-10.28
2	1	D10K: D10K: Other PT Losses	-0.79	-21.37	-21.37	-3.80	-3.80	-15.11	30.15
2	2	D10K: D10K: Other PT Losses	-0.79	-48.16	-48.16	-7.72	-7.72	-33.76	70.43
3	0	D10K: D10K: Other PT Losses	35.39	7.53	7.53	31.32	31.32	16.00	77.27
3	1	D10K: D10K: Other PT Losses	35.40	-6.73	-6.73	29.24	29.23	6.07	98.73
3	2	D10K: D10K: Other PT Losses	35.40	-17.24	-17.23	27.70	27.70	-1.24	114.53
4	0	D10K: D10K: Other PT Losses	35.40	-17.24	-17.23	27.70	27.70	-1.24	114.53
4	1	D10K: D10K: Other PT Losses	35.41	-27.08	-27.07	26.27	26.27	-8.08	129.34
4	2	D10K: D10K: Other PT Losses	35.42	-19.67	-19.66	27.37	27.36	-2.92	118.22
5	0	D10K: D10K: Other PT Losses	35.42	-19.67	-19.66	27.37	27.36	-2.92	118.22
5	1	D10K: D10K: Other PT Losses	35.43	4.96	4.98	30.98	30.97	14.23	81.21
5	2	D10K: D10K: Other PT Losses	35.43	46.81	46.83	37.11	37.09	43.36	18.32
6	0	D10K: D10K: Other PT Losses	35.43	46.81	46.83	37.11	37.09	43.36	18.32
6	1	D10K: D10K: Other PT Losses	35.44	53.71	53.73	38.12	38.10	48.16	7.95
6	2	D10K: D10K: Other PT Losses	35.44	60.92	60.94	39.17	39.16	53.18	-2.89
7	0	D10K: D10K: Other PT Losses	31.95	76.81	76.82	38.52	38.51	63.18	-35.48
7	1	D10K: D10K: Other PT Losses	31.96	65.59	65.61	36.88	36.87	55.37	-18.62
7	2	D10K: D10K: Other PT Losses	31.96	54.44	54.45	35.25	35.24	47.61	-1.85
8	0	D10K: D10K: Other PT Losses	46.10	69.24	69.26	49.49	49.47	62.21	11.29
8	1	D10K: D10K: Other PT Losses	46.10	50.17	50.19	46.71	46.69	48.94	39.98
8	2	D10K: D10K: Other PT Losses	46.10	34.20	34.22	44.38	44.35	37.82	63.99
9	0	D10K: D10K: Other PT Losses	46.10	34.20	34.22	44.38	44.35	37.82	63.99
9	1	D10K: D10K: Other PT Losses	46.11	7.79	7.82	40.52	40.50	19.45	103.71
9	2	D10K: D10K: Other PT Losses	46.12	0.84	0.87	39.52	39.49	14.61	114.18
10	0	D10K: D10K: Other PT Losses	46.12	0.84	0.87	39.52	39.49	14.61	114.18
10	1	D10K: D10K: Other PT Losses	46.13	13.37	13.40	41.36	41.33	23.34	95.36
10	2	D10K: D10K: Other PT Losses	46.14	45.38	45.42	46.05	46.01	45.63	47.25
11	0	D10K: D10K: Other PT Losses	46.14	45.38	45.42	46.05	46.01	45.63	47.25
11	1	D10K: D10K: Other PT Losses	46.14	51.18	51.22	46.90	46.86	49.67	38.54
11	2	D10K: D10K: Other PT Losses	46.14	57.33	57.38	47.80	47.76	53.95	29.29
12	0	D10K: D10K: Other PT Losses	46.36	66.22	66.26	49.29	49.25	60.20	16.49
12	1	D10K: D10K: Other PT Losses	46.37	62.90	62.95	48.81	48.77	57.89	21.47
12	2	D10K: D10K: Other PT Losses	46.37	59.65	59.69	48.33	48.29	55.63	26.36
13	0	D10K: D10K: Other PT Losses	47.06	61.12	61.16	49.14	49.09	56.86	25.88
13	1	D10K: D10K: Other PT Losses	47.06	45.62	45.66	46.87	46.83	46.07	49.19
13	2	D10K: D10K: Other PT Losses	47.06	32.47	32.51	44.95	44.91	36.92	68.97
14	0	D10K: D10K: Other PT Losses	47.06	32.47	32.51	44.95	44.91	36.92	68.97
14	1	D10K: D10K: Other PT Losses	47.07	6.38	6.43	41.15	41.10	18.77	108.21
14	2	D10K: D10K: Other PT Losses	47.08	3.62	3.68	40.76	40.70	16.85	112.38
15	0	D10K: D10K: Other PT Losses	47.08	3.62	3.68	40.76	40.70	16.85	112.38
15	1	D10K: D10K: Other PT Losses	47.09	24.14	24.21	43.77	43.71	31.14	81.54
15	2	D10K: D10K: Other PT Losses	47.10	67.96	68.03	50.19	50.12	61.64	15.70
16	0	D10K: D10K: Other PT Losses	47.10	67.96	68.03	50.19	50.12	61.64	15.70
16	1	D10K: D10K: Other PT Losses	47.10	74.58	74.65	51.16	51.09	66.25	5.75
16	2	D10K: D10K: Other PT Losses	47.10	81.51	81.58	52.18	52.11	71.08	-4.67

MEMBER STRESSES

DECK & CANOPY MEMBERS
D10K

(-) compression

			SELWEIGHT (DC)						
Member	Station	Result Case	(P/A) @ Centroid (kips/ft²)	Normal Stress @ Point 1 (kips/ft²)	Normal Stress @ Point 2 (kips/ft²)	Normal Stress @ Point 3 (kips/ft²)	Normal Stress @ Point 4 (kips/ft²)	Normal Stress @ Point 5 (kips/ft²)	Normal Stress @ Point 6 (kips/ft²)
17	0	D10K: D10K: Other PT Losses	46.34	75.75	75.82	50.68	50.61	66.84	2.06
17	1	D10K: D10K: Other PT Losses	46.34	80.78	80.84	51.41	51.34	70.33	-5.48
17	2	D10K: D10K: Other PT Losses	46.34	85.85	85.92	52.16	52.09	73.87	-13.12
18	0	D10K: D10K: Other PT Losses	36.46	76.88	76.95	42.41	42.34	64.62	-24.37
18	1	D10K: D10K: Other PT Losses	36.46	61.05	61.12	40.10	40.03	53.60	-0.57
18	2	D10K: D10K: Other PT Losses	36.46	46.73	46.80	38.00	37.93	43.63	20.97
19	0	D10K: D10K: Other PT Losses	36.46	46.73	46.80	38.00	37.93	43.63	20.97
19	1	D10K: D10K: Other PT Losses	36.47	2.55	2.63	31.56	31.48	12.89	87.40
19	2	D10K: D10K: Other PT Losses	36.48	-14.15	-14.06	29.13	29.04	1.27	112.53
20	0	D10K: D10K: Other PT Losses	36.48	-14.15	-14.06	29.13	29.04	1.27	112.53
20	1	D10K: D10K: Other PT Losses	36.49	-3.38	-3.29	30.71	30.62	8.77	96.37
20	2	D10K: D10K: Other PT Losses	36.51	34.86	34.96	36.32	36.22	35.39	38.90
21	0	D10K: D10K: Other PT Losses	36.51	34.86	34.96	36.32	36.22	35.39	38.90
21	1	D10K: D10K: Other PT Losses	36.51	44.45	44.54	37.72	37.63	42.07	24.50
21	2	D10K: D10K: Other PT Losses	36.51	54.89	54.99	39.25	39.16	49.34	8.81
22	0	D10K: D10K: Other PT Losses	27.71	37.47	37.57	29.19	29.10	34.54	12.96
22	1	D10K: D10K: Other PT Losses	27.71	51.10	51.20	31.19	31.09	44.03	-7.52
22	2	D10K: D10K: Other PT Losses	27.71	64.79	64.89	33.19	33.09	53.55	-28.10
23	0	D10K: D10K: Other PT Losses	15.97	43.75	43.85	20.09	19.99	35.34	-25.87
23	1	D10K: D10K: Other PT Losses	15.97	35.37	35.47	18.86	18.77	29.51	-13.28
23	2	D10K: D10K: Other PT Losses	15.97	27.70	27.80	17.74	17.64	24.17	-1.74
24	0	D10K: D10K: Other PT Losses	15.97	27.70	27.80	17.74	17.64	24.17	-1.74
24	1	D10K: D10K: Other PT Losses	15.98	-5.59	-5.48	12.89	12.78	1.00	48.34
24	2	D10K: D10K: Other PT Losses	16.00	-7.41	-7.30	12.64	12.52	-0.26	51.09
25	0	D10K: D10K: Other PT Losses	16.00	-7.41	-7.30	12.64	12.52	-0.26	51.09
25	1	D10K: D10K: Other PT Losses	16.01	22.27	22.39	16.99	16.87	20.41	6.50
25	2	D10K: D10K: Other PT Losses	16.02	83.47	83.59	25.96	25.83	63.01	-85.47
26	0	D10K: D10K: Other PT Losses	16.02	83.47	83.59	25.96	25.83	63.01	-85.47
26	1	D10K: D10K: Other PT Losses	16.02	104.23	104.36	29.00	28.87	77.47	-116.68
26	2	D10K: D10K: Other PT Losses	16.02	127.07	127.20	32.34	32.21	93.36	-151.01
29	0	D10K: D10K: Other PT Losses	8.53	81.80	82.52	19.66	18.93	59.78	-102.18
29	1	D10K: D10K: Other PT Losses	8.53	60.69	61.40	16.57	15.86	45.09	-70.43
29	2	D10K: D10K: Other PT Losses	8.53	41.69	42.39	13.78	13.09	31.86	-41.85
30	0	D10K: D10K: Other PT Losses	8.53	41.69	42.39	13.78	13.09	31.86	-41.85
30	1	D10K: D10K: Other PT Losses	8.55	-12.04	-11.41	5.90	5.26	-5.56	39.01
30	2	D10K: D10K: Other PT Losses	8.56	-34.27	-33.69	2.62	2.05	-21.05	72.49
31	0	D10K: D10K: Other PT Losses	8.56	-34.27	-33.69	2.62	2.05	-21.05	72.49
31	1	D10K: D10K: Other PT Losses	8.57	-24.98	-24.46	3.96	3.44	-14.60	58.60
31	2	D10K: D10K: Other PT Losses	8.58	15.83	16.28	9.90	9.45	13.78	-2.66
32	0	D10K: D10K: Other PT Losses	8.58	15.83	16.28	9.90	9.45	13.78	-2.66
32	1	D10K: D10K: Other PT Losses	8.58	24.46	24.91	11.16	10.71	19.79	-15.64
32	2	D10K: D10K: Other PT Losses	8.58	33.78	34.22	12.52	12.08	26.27	-29.63
33	0	D10K: D10K: Other PT Losses	13.28	38.28	38.71	17.19	16.75	30.83	-24.63
33	1	D10K: D10K: Other PT Losses	13.28	36.52	36.96	16.93	16.49	29.61	-22.00
33	2	D10K: D10K: Other PT Losses	13.28	34.78	35.22	16.67	16.24	28.40	-19.38
34	0	D10K: D10K: Other PT Losses	13.34	36.73	37.17	17.01	16.58	29.77	-22.16
34	1	D10K: D10K: Other PT Losses	13.34	31.90	32.33	16.30	15.87	26.41	-14.89
34	2	D10K: D10K: Other PT Losses	13.34	27.42	27.84	15.64	15.22	23.29	-8.14

MEMBER STRESSES

DECK & CANOPY MEMBERS
D10K

(-) compression

			SELWEIGHT (DC)						
Member	Station	Result Case	(P/A) @ Centroid (kips/ft²)	Normal Stress @ Point 1 (kips/ft²)	Normal Stress @ Point 2 (kips/ft²)	Normal Stress @ Point 3 (kips/ft²)	Normal Stress @ Point 4 (kips/ft²)	Normal Stress @ Point 5 (kips/ft²)	Normal Stress @ Point 6 (kips/ft²)
35	0	D10K: D10K: Other PT Losses	13.34	27.42	27.84	15.64	15.22	23.29	-8.14
35	1	D10K: D10K: Other PT Losses	13.35	15.77	16.17	13.93	13.53	15.17	9.40
35	2	D10K: D10K: Other PT Losses	13.35	7.45	7.84	12.71	12.32	9.38	21.92
36	0	D10K: D10K: Other PT Losses	13.35	7.45	7.84	12.71	12.32	9.38	21.92
36	1	D10K: D10K: Other PT Losses	13.36	2.46	2.83	11.97	11.61	5.90	29.45
36	2	D10K: D10K: Other PT Losses	13.36	0.82	1.17	11.72	11.38	4.75	31.94
37	0	D10K: D10K: Other PT Losses	13.36	0.82	1.17	11.72	11.38	4.75	31.94
37	1	D10K: D10K: Other PT Losses	13.36	1.28	1.62	11.79	11.45	5.07	31.26
37	2	D10K: D10K: Other PT Losses	13.36	2.64	2.97	11.98	11.66	6.01	29.23
38	0	D10K: D10K: Other PT Losses	14.34	5.34	5.66	13.21	12.88	8.19	27.62
38	1	D10K: D10K: Other PT Losses	14.34	5.11	5.44	13.18	12.85	8.03	27.96
38	2	D10K: D10K: Other PT Losses	14.34	4.90	5.22	13.15	12.82	7.88	28.29
39	0	D10K: D10K: Other PT Losses	14.45	4.96	5.29	13.25	12.93	7.96	28.47
39	1	D10K: D10K: Other PT Losses	14.45	2.46	2.78	12.88	12.56	6.22	32.24
39	2	D10K: D10K: Other PT Losses	14.45	0.27	0.58	12.56	12.25	4.69	35.54
40	0	D10K: D10K: Other PT Losses	14.45	0.27	0.58	12.56	12.25	4.69	35.54
40	1	D10K: D10K: Other PT Losses	14.46	-4.41	-4.11	11.87	11.57	1.43	42.59
40	2	D10K: D10K: Other PT Losses	14.46	-6.33	-6.05	11.58	11.30	0.09	45.50
41	0	D10K: D10K: Other PT Losses	14.46	-6.33	-6.05	11.58	11.30	0.09	45.50
41	1	D10K: D10K: Other PT Losses	14.46	-5.48	-5.22	11.70	11.44	0.67	44.25
41	2	D10K: D10K: Other PT Losses	14.47	-1.86	-1.62	12.22	11.98	3.19	38.83
42	0	D10K: D10K: Other PT Losses	14.47	-1.86	-1.62	12.22	11.98	3.19	38.83
42	1	D10K: D10K: Other PT Losses	14.47	1.77	2.00	12.75	12.51	5.71	33.39
42	2	D10K: D10K: Other PT Losses	14.47	6.46	6.68	13.43	13.21	8.97	26.34
43	0	D10K: D10K: Other PT Losses	12.60	3.15	3.37	11.34	11.12	6.10	26.63
43	1	D10K: D10K: Other PT Losses	12.60	4.63	4.84	11.56	11.34	7.12	24.41
43	2	D10K: D10K: Other PT Losses	12.60	6.11	6.33	11.77	11.55	8.16	22.17
44	0	D10K: D10K: Other PT Losses	13.60	0.35	0.57	11.79	11.57	4.45	33.36
44	1	D10K: D10K: Other PT Losses	13.61	-2.17	-1.96	11.42	11.21	2.70	37.16
44	2	D10K: D10K: Other PT Losses	13.61	-4.39	-4.18	11.09	10.89	1.15	40.50
45	0	D10K: D10K: Other PT Losses	13.61	-4.39	-4.18	11.09	10.89	1.15	40.50
45	1	D10K: D10K: Other PT Losses	13.61	-8.99	-8.80	10.41	10.22	-2.05	47.44
45	2	D10K: D10K: Other PT Losses	13.61	-11.20	-11.02	10.08	9.91	-3.59	50.77
46	0	D10K: D10K: Other PT Losses	13.61	-11.20	-11.02	10.08	9.91	-3.59	50.77
46	1	D10K: D10K: Other PT Losses	13.62	-11.01	-10.86	10.10	9.95	-3.47	50.52
46	2	D10K: D10K: Other PT Losses	13.62	-8.45	-8.31	10.47	10.33	-1.69	46.69
47	0	D10K: D10K: Other PT Losses	13.62	-8.45	-8.31	10.47	10.33	-1.69	46.69
47	1	D10K: D10K: Other PT Losses	13.62	-5.17	-5.04	10.95	10.82	0.59	41.77
47	2	D10K: D10K: Other PT Losses	13.62	-0.68	-0.57	11.60	11.48	3.70	35.04
48	0	D10K: D10K: Other PT Losses	8.17	-10.92	-10.80	5.44	5.33	-5.08	36.77
48	1	D10K: D10K: Other PT Losses	8.17	-8.04	-7.92	5.87	5.75	-3.07	32.45
48	2	D10K: D10K: Other PT Losses	8.17	-5.15	-5.03	6.29	6.17	-1.06	28.10
49	0	D10K: D10K: Other PT Losses	9.95	-16.44	-16.32	6.16	6.04	-8.38	49.53
49	1	D10K: D10K: Other PT Losses	9.95	-15.51	-15.40	6.29	6.18	-7.73	48.14
49	2	D10K: D10K: Other PT Losses	9.95	-14.27	-14.16	6.47	6.37	-6.87	46.29
50	0	D10K: D10K: Other PT Losses	9.95	-14.27	-14.16	6.47	6.37	-6.87	46.29
50	1	D10K: D10K: Other PT Losses	9.96	-9.53	-9.45	7.16	7.07	-3.58	39.19
50	2	D10K: D10K: Other PT Losses	9.96	-2.68	-2.60	8.15	8.08	1.19	28.90

MEMBER STRESSES

DECK & CANOPY MEMBERS
D10K

(-) compression

			SELWEIGHT (DC)						
Member	Station	Result Case	(P/A) @ Centroid (kips/ft²)	Normal Stress @ Point 1 (kips/ft²)	Normal Stress @ Point 2 (kips/ft²)	Normal Stress @ Point 3 (kips/ft²)	Normal Stress @ Point 4 (kips/ft²)	Normal Stress @ Point 5 (kips/ft²)	Normal Stress @ Point 6 (kips/ft²)
51	0	D10K: D10K: Other PT Losses	9.96	-2.68	-2.60	8.15	8.08	1.19	28.90
51	1	D10K: D10K: Other PT Losses	9.96	6.30	6.36	9.46	9.40	7.44	15.42
51	2	D10K: D10K: Other PT Losses	9.97	17.41	17.45	11.08	11.04	15.16	-1.25
52	0	D10K: D10K: Other PT Losses	9.97	17.41	17.45	11.08	11.04	15.16	-1.25
52	1	D10K: D10K: Other PT Losses	9.97	27.73	27.76	12.58	12.55	22.34	-16.76
52	2	D10K: D10K: Other PT Losses	9.97	39.39	39.41	14.28	14.27	30.45	-34.27
60	0	D10K: D10K: Other PT Losses	0.00	0.00	0.00	0.00	0.00	0.00	0.00
60	1	D10K: D10K: Other PT Losses	0.00	0.15	0.15	0.02	0.02	0.10	-0.22
60	2	D10K: D10K: Other PT Losses	0.00	0.58	0.58	0.09	0.09	0.40	-0.86
101	0	D10K: D10K: Other PT Losses	0.23	-11.44	-11.44	13.04	13.04	-8.84	2.63
101	1	D10K: D10K: Other PT Losses	0.23	-28.41	-28.40	31.67	31.66	-22.02	6.12
101	2	D10K: D10K: Other PT Losses	0.23	-43.91	-43.90	48.69	48.69	-34.07	9.32
102	0	D10K: D10K: Other PT Losses	0.23	-43.91	-43.90	48.69	48.69	-34.07	9.32
102	1	D10K: D10K: Other PT Losses	0.24	-106.21	-106.20	117.12	117.10	-82.48	22.15
102	2	D10K: D10K: Other PT Losses	0.25	-116.38	-116.36	128.30	128.28	-90.38	24.26
103	0	D10K: D10K: Other PT Losses	0.25	-116.38	-116.36	128.30	128.28	-90.38	24.26
103	1	D10K: D10K: Other PT Losses	0.26	-75.29	-75.26	83.22	83.19	-58.44	15.82
103	2	D10K: D10K: Other PT Losses	0.28	16.60	16.64	-17.65	-17.68	12.97	-3.09
104	0	D10K: D10K: Other PT Losses	0.27	16.60	16.63	-17.65	-17.68	12.97	-3.09
104	1	D10K: D10K: Other PT Losses	0.28	50.99	51.03	-55.41	-55.45	39.71	-10.17
104	2	D10K: D10K: Other PT Losses	0.28	89.91	89.95	-98.12	-98.16	69.95	-18.17
106	0	D10K: D10K: Other PT Losses	-90.14	57.34	57.38	-252.06	-252.10	24.49	-120.50
106	1	D10K: D10K: Other PT Losses	-90.14	38.08	38.12	-230.91	-230.95	9.53	-116.53
106	2	D10K: D10K: Other PT Losses	-90.13	19.92	19.96	-210.96	-211.00	-4.59	-112.79
107	0	D10K: D10K: Other PT Losses	-90.13	19.92	19.96	-210.96	-211.00	-4.59	-112.79
107	1	D10K: D10K: Other PT Losses	-90.12	-64.75	-64.71	-117.98	-118.02	-70.39	-95.35
107	2	D10K: D10K: Other PT Losses	-90.11	-117.22	-117.18	-60.35	-60.39	-111.16	-84.54
108	0	D10K: D10K: Other PT Losses	-90.11	-117.22	-117.18	-60.35	-60.39	-111.16	-84.54
108	1	D10K: D10K: Other PT Losses	-90.10	-140.91	-140.86	-34.33	-34.37	-129.57	-79.65
108	2	D10K: D10K: Other PT Losses	-90.10	-139.35	-139.31	-36.02	-36.06	-128.36	-79.96
109	0	D10K: D10K: Other PT Losses	-90.10	-139.35	-139.31	-36.02	-36.07	-128.36	-79.96
109	1	D10K: D10K: Other PT Losses	-90.09	-133.41	-133.36	-42.55	-42.59	-123.74	-81.18
109	2	D10K: D10K: Other PT Losses	-90.09	-123.74	-123.69	-53.16	-53.20	-116.22	-83.17
111	0	D10K: D10K: Other PT Losses	-130.00	-132.08	-132.03	-127.71	-127.76	-131.60	-129.57
111	1	D10K: D10K: Other PT Losses	-129.99	-141.52	-141.47	-117.35	-117.39	-138.93	-127.63
111	2	D10K: D10K: Other PT Losses	-129.99	-150.03	-149.98	-108.00	-108.04	-145.54	-125.87
112	0	D10K: D10K: Other PT Losses	-129.99	-150.03	-149.98	-107.99	-108.04	-145.54	-125.87
112	1	D10K: D10K: Other PT Losses	-129.98	-187.17	-187.12	-67.20	-67.24	-174.40	-118.21
112	2	D10K: D10K: Other PT Losses	-129.97	-190.27	-190.22	-63.77	-63.82	-176.81	-117.56
113	0	D10K: D10K: Other PT Losses	-129.97	-190.27	-190.22	-63.77	-63.82	-176.81	-117.56
113	1	D10K: D10K: Other PT Losses	-129.96	-164.18	-164.13	-92.40	-92.45	-156.54	-122.92
113	2	D10K: D10K: Other PT Losses	-129.95	-110.82	-110.76	-150.97	-151.02	-115.06	-133.90
114	0	D10K: D10K: Other PT Losses	-129.96	-110.82	-110.76	-150.97	-151.02	-115.06	-133.90
114	1	D10K: D10K: Other PT Losses	-129.95	-90.53	-90.47	-173.25	-173.29	-99.29	-138.07
114	2	D10K: D10K: Other PT Losses	-129.95	-67.43	-67.38	-198.59	-198.64	-81.34	-142.82
116	0	D10K: D10K: Other PT Losses	-130.17	-132.45	-132.40	-127.66	-127.71	-131.92	-129.70
116	1	D10K: D10K: Other PT Losses	-130.17	-139.69	-139.63	-119.72	-119.77	-137.54	-128.21
116	2	D10K: D10K: Other PT Losses	-130.16	-146.19	-146.13	-112.58	-112.63	-142.59	-126.87

MEMBER STRESSES

DECK & CANOPY MEMBERS
D10K

(-) compression

			SELWEIGHT (DC)						
Member	Station	Result Case	(P/A) @ Centroid (kips/ft²)	Normal Stress @ Point 1 (kips/ft²)	Normal Stress @ Point 2 (kips/ft²)	Normal Stress @ Point 3 (kips/ft²)	Normal Stress @ Point 4 (kips/ft²)	Normal Stress @ Point 5 (kips/ft²)	Normal Stress @ Point 6 (kips/ft²)
117	0	D10K: D10K: Other PT Losses	-130.16	-146.19	-146.13	-112.58	-112.63	-142.59	-126.87
117	1	D10K: D10K: Other PT Losses	-130.15	-176.47	-176.41	-79.31	-79.36	-166.13	-120.62
117	2	D10K: D10K: Other PT Losses	-130.14	-171.99	-171.94	-84.20	-84.25	-162.65	-121.53
118	0	D10K: D10K: Other PT Losses	-130.14	-171.99	-171.94	-84.20	-84.25	-162.64	-121.53
118	1	D10K: D10K: Other PT Losses	-130.14	-136.51	-136.45	-123.15	-123.20	-135.06	-128.83
118	2	D10K: D10K: Other PT Losses	-130.13	-71.33	-71.27	-194.68	-194.74	-84.41	-142.24
119	0	D10K: D10K: Other PT Losses	-130.13	-71.33	-71.27	-194.69	-194.74	-84.41	-142.24
119	1	D10K: D10K: Other PT Losses	-130.13	-54.15	-54.10	-213.54	-213.59	-71.06	-145.77
119	2	D10K: D10K: Other PT Losses	-130.12	-35.33	-35.27	-234.20	-234.26	-56.43	-149.64
121	0	D10K: D10K: Other PT Losses	-78.97	-82.91	-82.85	-74.66	-74.72	-82.01	-78.17
121	1	D10K: D10K: Other PT Losses	-78.97	-91.26	-91.20	-65.49	-65.54	-88.50	-76.45
121	2	D10K: D10K: Other PT Losses	-78.97	-98.79	-98.73	-57.21	-57.27	-94.35	-74.90
122	0	D10K: D10K: Other PT Losses	-78.97	-98.79	-98.73	-57.21	-57.27	-94.35	-74.90
122	1	D10K: D10K: Other PT Losses	-78.96	-127.29	-127.23	-25.90	-25.96	-116.50	-69.02
122	2	D10K: D10K: Other PT Losses	-78.95	-120.36	-120.29	-33.50	-33.55	-111.11	-70.43
123	0	D10K: D10K: Other PT Losses	-78.95	-120.36	-120.29	-33.50	-33.55	-111.11	-70.43
123	1	D10K: D10K: Other PT Losses	-78.94	-80.59	-80.52	-77.14	-77.20	-80.20	-78.61
123	2	D10K: D10K: Other PT Losses	-78.93	-7.76	-7.70	-157.08	-157.13	-23.60	-93.59
124	0	D10K: D10K: Other PT Losses	-78.93	-7.76	-7.70	-157.08	-157.14	-23.60	-93.59
124	1	D10K: D10K: Other PT Losses	-78.93	3.67	3.73	-169.63	-169.68	-14.71	-95.94
124	2	D10K: D10K: Other PT Losses	-78.93	15.73	15.79	-182.86	-182.92	-5.34	-98.42
126	0	D10K: D10K: Other PT Losses	22.78	-38.35	-38.28	89.90	89.84	-24.70	35.36
126	1	D10K: D10K: Other PT Losses	22.79	-43.57	-43.51	95.63	95.58	-28.76	36.44
126	2	D10K: D10K: Other PT Losses	22.79	-46.52	-46.45	98.88	98.82	-31.05	37.05
127	0	D10K: D10K: Other PT Losses	22.79	-46.52	-46.45	98.88	98.82	-31.05	37.05
127	1	D10K: D10K: Other PT Losses	22.80	-38.40	-38.33	89.98	89.92	-24.73	35.39
127	2	D10K: D10K: Other PT Losses	22.81	-3.54	-3.48	51.73	51.67	2.35	28.22
128	0	D10K: D10K: Other PT Losses	22.81	-3.54	-3.48	51.73	51.67	2.35	28.22
128	1	D10K: D10K: Other PT Losses	22.81	57.99	58.06	-15.82	-15.88	50.18	15.56
133	0	D10K: D10K: Other PT Losses	9.28	94.07	94.23	-83.82	-83.96	75.24	-8.19
133	1	D10K: D10K: Other PT Losses	9.29	25.31	25.47	-8.32	-8.45	21.80	5.98
133	2	D10K: D10K: Other PT Losses	9.30	-17.13	-16.99	38.31	38.17	-11.19	14.73
134	0	D10K: D10K: Other PT Losses	9.30	-17.13	-16.99	38.31	38.17	-11.19	14.73
134	1	D10K: D10K: Other PT Losses	9.31	-33.28	-33.14	56.05	55.92	-23.73	18.06
134	2	D10K: D10K: Other PT Losses	9.32	-22.48	-22.35	44.22	44.10	-15.35	15.85
135	0	D10K: D10K: Other PT Losses	9.32	-22.48	-22.35	44.22	44.10	-15.35	15.85
135	1	D10K: D10K: Other PT Losses	9.32	-14.08	-13.95	35.00	34.88	-8.82	14.12
135	2	D10K: D10K: Other PT Losses	9.32	-3.32	-3.20	23.19	23.08	-0.46	11.91
137	0	D10K: D10K: Other PT Losses	-38.75	21.81	21.93	-105.25	-105.36	8.36	-51.23
137	1	D10K: D10K: Other PT Losses	-38.75	10.98	11.11	-93.37	-93.48	-0.05	-49.00
137	2	D10K: D10K: Other PT Losses	-38.75	0.76	0.88	-82.14	-82.25	-8.00	-46.89
138	0	D10K: D10K: Other PT Losses	-38.75	0.76	0.88	-82.14	-82.25	-8.00	-46.90
138	1	D10K: D10K: Other PT Losses	-38.75	-26.02	-25.90	-52.73	-52.83	-28.81	-41.38
138	2	D10K: D10K: Other PT Losses	-38.74	-48.32	-48.20	-28.24	-28.34	-46.14	-36.78
139	0	D10K: D10K: Other PT Losses	-38.74	-48.32	-48.20	-28.24	-28.34	-46.14	-36.78
139	1	D10K: D10K: Other PT Losses	-38.74	-66.83	-66.72	-7.91	-8.00	-60.53	-32.97
139	2	D10K: D10K: Other PT Losses	-38.73	-79.21	-79.11	5.70	5.60	-70.15	-30.41

MEMBER STRESSES

DECK & CANOPY MEMBERS
D10K

(-) compression

			SELWEIGHT (DC)						
Member	Station	Result Case	(P/A) @ Centroid (kips/ft²)	Normal Stress @ Point 1 (kips/ft²)	Normal Stress @ Point 2 (kips/ft²)	Normal Stress @ Point 3 (kips/ft²)	Normal Stress @ Point 4 (kips/ft²)	Normal Stress @ Point 5 (kips/ft²)	Normal Stress @ Point 6 (kips/ft²)
140	0	D10K: D10K: Other PT Losses	-38.73	-79.21	-79.11	5.70	5.60	-70.15	-30.41
140	1	D10K: D10K: Other PT Losses	-38.73	-81.13	-81.02	7.80	7.71	-71.64	-30.02
140	2	D10K: D10K: Other PT Losses	-38.73	-82.60	-82.50	9.43	9.33	-72.79	-29.71
142	0	D10K: D10K: Other PT Losses	-41.39	-45.36	-45.26	-37.05	-37.14	-44.44	-40.59
142	1	D10K: D10K: Other PT Losses	-41.39	-51.96	-51.86	-29.80	-29.89	-49.56	-39.23
142	2	D10K: D10K: Other PT Losses	-41.39	-57.36	-57.26	-23.87	-23.96	-53.76	-38.11
143	0	D10K: D10K: Other PT Losses	-41.39	-57.36	-57.26	-23.87	-23.96	-53.76	-38.11
143	1	D10K: D10K: Other PT Losses	-41.39	-64.60	-64.51	-15.91	-16.00	-59.39	-36.62
143	2	D10K: D10K: Other PT Losses	-41.38	-67.71	-67.62	-12.49	-12.57	-61.81	-35.97
144	0	D10K: D10K: Other PT Losses	-41.38	-67.71	-67.62	-12.49	-12.57	-61.81	-35.97
144	1	D10K: D10K: Other PT Losses	-41.38	-66.06	-65.97	-14.29	-14.37	-60.53	-36.31
144	2	D10K: D10K: Other PT Losses	-41.38	-58.58	-58.50	-22.49	-22.57	-54.72	-37.84
145	0	D10K: D10K: Other PT Losses	-41.37	-58.58	-58.50	-22.49	-22.56	-54.72	-37.84
145	1	D10K: D10K: Other PT Losses	-41.37	-55.13	-55.05	-26.27	-26.35	-52.03	-38.55
145	2	D10K: D10K: Other PT Losses	-41.37	-51.26	-51.18	-30.53	-30.60	-49.02	-39.34
147	0	D10K: D10K: Other PT Losses	-36.09	-45.30	-45.22	-25.99	-26.06	-43.22	-34.20
147	1	D10K: D10K: Other PT Losses	-36.09	-51.45	-51.38	-19.23	-19.29	-48.00	-32.93
147	2	D10K: D10K: Other PT Losses	-36.09	-56.16	-56.09	-14.05	-14.12	-51.66	-31.96
148	0	D10K: D10K: Other PT Losses	-36.09	-56.16	-56.09	-14.05	-14.12	-51.66	-31.96
148	1	D10K: D10K: Other PT Losses	-36.08	-61.18	-61.11	-8.53	-8.59	-55.56	-30.92
148	2	D10K: D10K: Other PT Losses	-36.08	-62.25	-62.18	-7.36	-7.42	-56.39	-30.70
149	0	D10K: D10K: Other PT Losses	-36.08	-62.25	-62.18	-7.36	-7.42	-56.39	-30.70
149	1	D10K: D10K: Other PT Losses	-36.08	-58.58	-58.52	-11.37	-11.43	-53.55	-31.45
149	2	D10K: D10K: Other PT Losses	-36.07	-49.45	-49.39	-21.39	-21.44	-46.45	-33.33
150	0	D10K: D10K: Other PT Losses	-36.07	-49.45	-49.39	-21.39	-21.44	-46.44	-33.32
150	1	D10K: D10K: Other PT Losses	-36.07	-45.42	-45.36	-25.81	-25.86	-43.31	-34.15
150	2	D10K: D10K: Other PT Losses	-36.07	-40.93	-40.87	-30.74	-30.78	-39.82	-35.07
152	0	D10K: D10K: Other PT Losses	-23.18	-77.38	-77.33	36.32	36.27	-65.28	-12.03
152	1	D10K: D10K: Other PT Losses	-23.18	-72.12	-72.07	30.55	30.51	-61.20	-13.11
152	2	D10K: D10K: Other PT Losses	-23.18	-65.23	-65.18	22.99	22.95	-55.84	-14.53
153	0	D10K: D10K: Other PT Losses	-23.18	-65.23	-65.18	22.99	22.95	-55.84	-14.52
153	1	D10K: D10K: Other PT Losses	-23.17	-50.89	-50.85	7.26	7.22	-44.70	-17.47
153	2	D10K: D10K: Other PT Losses	-23.17	-32.75	-32.71	-12.65	-12.69	-30.60	-21.20
154	0	D10K: D10K: Other PT Losses	-23.17	-32.76	-32.71	-12.65	-12.69	-30.60	-21.20
154	1	D10K: D10K: Other PT Losses	-23.17	-8.16	-8.13	-39.65	-39.68	-11.49	-26.26
154	2	D10K: D10K: Other PT Losses	-23.16	21.68	21.72	-72.40	-72.43	11.70	-32.40
155	0	D10K: D10K: Other PT Losses	-23.16	21.69	21.72	-72.40	-72.43	11.71	-32.39
155	1	D10K: D10K: Other PT Losses	-23.16	32.08	32.11	-83.80	-83.83	19.78	-34.53
155	2	D10K: D10K: Other PT Losses	-23.15	42.96	43.00	-95.75	-95.78	28.24	-36.77
157	0	D10K: D10K: Other PT Losses	-2.50	4.62	4.65	-10.32	-10.35	3.05	-3.97
157	1	D10K: D10K: Other PT Losses	-2.50	-2.77	-2.75	-2.20	-2.22	-2.70	-2.44
157	2	D10K: D10K: Other PT Losses	-2.49	-8.39	-8.36	3.98	3.95	-7.07	-1.28
158	0	D10K: D10K: Other PT Losses	-2.49	-8.39	-8.37	3.98	3.95	-7.07	-1.28
158	1	D10K: D10K: Other PT Losses	-2.49	-16.22	-16.20	12.58	12.57	-13.15	0.34
158	2	D10K: D10K: Other PT Losses	-2.48	-8.79	-8.77	4.44	4.43	-7.38	-1.19
159	0	D10K: D10K: Other PT Losses	-2.48	-8.79	-8.77	4.44	4.43	-7.38	-1.19
159	1	D10K: D10K: Other PT Losses	-2.48	14.32	14.33	-20.92	-20.93	10.58	-5.94
159	2	D10K: D10K: Other PT Losses	-2.47	53.13	53.13	-63.51	-63.51	40.74	-13.92

MEMBER STRESSES

DECK & CANOPY MEMBERS
D10K

(-) compression

			NONSTRUCTURAL COMPONENTS (DC)						
Member	Station	Result Case	(P/A) @ Centroid (kips/ft²)	Normal Stress @ Point 1 (kips/ft²)	Normal Stress @ Point 2 (kips/ft²)	Normal Stress @ Point 3 (kips/ft²)	Normal Stress @ Point 4 (kips/ft²)	Normal Stress @ Point 5 (kips/ft²)	Normal Stress @ Point 6 (kips/ft²)
1	0	D10K: D10K: Other PT Losses	0.06	2.45	2.45	0.41	0.41	1.72	-3.54
1	1	D10K: D10K: Other PT Losses	0.06	2.46	2.46	0.41	0.41	1.73	-3.54
1	2	D10K: D10K: Other PT Losses	0.06	2.46	2.46	0.41	0.41	1.73	-3.55
2	0	D10K: D10K: Other PT Losses	0.05	2.55	2.55	0.41	0.41	1.79	-3.72
2	1	D10K: D10K: Other PT Losses	0.05	1.81	1.81	0.30	0.30	1.28	-2.61
2	2	D10K: D10K: Other PT Losses	0.05	1.08	1.08	0.20	0.20	0.76	-1.50
3	0	D10K: D10K: Other PT Losses	0.87	2.37	2.37	1.09	1.09	1.91	-1.40
3	1	D10K: D10K: Other PT Losses	0.87	1.27	1.27	0.92	0.92	1.15	0.26
3	2	D10K: D10K: Other PT Losses	0.87	0.38	0.38	0.79	0.79	0.53	1.59
4	0	D10K: D10K: Other PT Losses	0.87	0.38	0.38	0.79	0.79	0.53	1.59
4	1	D10K: D10K: Other PT Losses	0.87	-0.79	-0.79	0.62	0.62	-0.28	3.35
4	2	D10K: D10K: Other PT Losses	0.87	-0.96	-0.96	0.60	0.60	-0.40	3.61
5	0	D10K: D10K: Other PT Losses	0.87	-0.96	-0.96	0.60	0.60	-0.40	3.61
5	1	D10K: D10K: Other PT Losses	0.87	-0.13	-0.13	0.72	0.72	0.17	2.37
5	2	D10K: D10K: Other PT Losses	0.87	1.69	1.69	0.99	0.99	1.44	-0.37
6	0	D10K: D10K: Other PT Losses	0.87	1.69	1.69	0.99	0.99	1.44	-0.37
6	1	D10K: D10K: Other PT Losses	0.87	2.01	2.01	1.03	1.04	1.66	-0.84
6	2	D10K: D10K: Other PT Losses	0.87	2.34	2.34	1.08	1.08	1.90	-1.35
7	0	D10K: D10K: Other PT Losses	0.76	2.72	2.72	1.05	1.05	2.13	-2.18
7	1	D10K: D10K: Other PT Losses	0.76	2.45	2.45	1.01	1.01	1.94	-1.77
7	2	D10K: D10K: Other PT Losses	0.76	2.18	2.18	0.97	0.97	1.75	-1.37
8	0	D10K: D10K: Other PT Losses	0.96	2.49	2.49	1.19	1.19	2.03	-1.33
8	1	D10K: D10K: Other PT Losses	0.96	1.46	1.46	1.04	1.04	1.31	0.21
8	2	D10K: D10K: Other PT Losses	0.96	0.61	0.61	0.91	0.91	0.72	1.49
9	0	D10K: D10K: Other PT Losses	0.96	0.61	0.61	0.91	0.91	0.72	1.49
9	1	D10K: D10K: Other PT Losses	0.96	-0.72	-0.73	0.72	0.72	-0.21	3.50
9	2	D10K: D10K: Other PT Losses	0.96	-0.94	-0.94	0.68	0.69	-0.36	3.83
10	0	D10K: D10K: Other PT Losses	0.96	-0.94	-0.94	0.68	0.69	-0.36	3.83
10	1	D10K: D10K: Other PT Losses	0.97	-0.03	-0.03	0.82	0.82	0.27	2.46
10	2	D10K: D10K: Other PT Losses	0.97	2.01	2.01	1.12	1.12	1.69	-0.61
11	0	D10K: D10K: Other PT Losses	0.97	2.01	2.01	1.12	1.12	1.69	-0.61
11	1	D10K: D10K: Other PT Losses	0.97	2.37	2.37	1.17	1.17	1.94	-1.15
11	2	D10K: D10K: Other PT Losses	0.97	2.75	2.75	1.23	1.23	2.21	-1.72
12	0	D10K: D10K: Other PT Losses	0.96	2.71	2.71	1.21	1.22	2.18	-1.67
12	1	D10K: D10K: Other PT Losses	0.96	2.68	2.68	1.21	1.21	2.16	-1.63
12	2	D10K: D10K: Other PT Losses	0.96	2.66	2.66	1.21	1.21	2.14	-1.59
13	0	D10K: D10K: Other PT Losses	0.76	2.55	2.54	1.02	1.02	2.00	-1.92
13	1	D10K: D10K: Other PT Losses	0.76	1.62	1.62	0.88	0.89	1.36	-0.54
13	2	D10K: D10K: Other PT Losses	0.76	0.84	0.83	0.77	0.77	0.81	0.65
14	0	D10K: D10K: Other PT Losses	0.76	0.84	0.83	0.77	0.77	0.81	0.65
14	1	D10K: D10K: Other PT Losses	0.76	-0.76	-0.76	0.54	0.54	-0.30	3.04
14	2	D10K: D10K: Other PT Losses	0.76	-1.00	-1.00	0.50	0.51	-0.47	3.41
15	0	D10K: D10K: Other PT Losses	0.76	-1.00	-1.00	0.50	0.51	-0.47	3.41
15	1	D10K: D10K: Other PT Losses	0.76	0.10	0.10	0.66	0.67	0.30	1.76
15	2	D10K: D10K: Other PT Losses	0.76	2.55	2.54	1.02	1.03	2.00	-1.92
16	0	D10K: D10K: Other PT Losses	0.76	2.55	2.54	1.02	1.03	2.00	-1.92
16	1	D10K: D10K: Other PT Losses	0.76	2.92	2.92	1.08	1.08	2.26	-2.48
16	2	D10K: D10K: Other PT Losses	0.76	3.31	3.31	1.13	1.14	2.54	-3.07

MEMBER STRESSES

DECK & CANOPY MEMBERS
D10K

(-) compression

			NONSTRUCTURAL COMPONENTS (DC)						
Member	Station	Result Case	(P/A) @ Centroid (kips/ft²)	Normal Stress @ Point 1 (kips/ft²)	Normal Stress @ Point 2 (kips/ft²)	Normal Stress @ Point 3 (kips/ft²)	Normal Stress @ Point 4 (kips/ft²)	Normal Stress @ Point 5 (kips/ft²)	Normal Stress @ Point 6 (kips/ft²)
17	0	D10K: D10K: Other PT Losses	0.74	2.99	2.99	1.07	1.08	2.31	-2.63
17	1	D10K: D10K: Other PT Losses	0.74	3.19	3.18	1.10	1.10	2.44	-2.92
17	2	D10K: D10K: Other PT Losses	0.74	3.38	3.38	1.13	1.13	2.58	-3.22
18	0	D10K: D10K: Other PT Losses	0.31	2.99	2.99	0.70	0.70	2.18	-3.73
18	1	D10K: D10K: Other PT Losses	0.31	2.14	2.13	0.57	0.58	1.58	-2.44
18	2	D10K: D10K: Other PT Losses	0.31	1.37	1.37	0.46	0.47	1.05	-1.29
19	0	D10K: D10K: Other PT Losses	0.31	1.37	1.37	0.46	0.47	1.05	-1.29
19	1	D10K: D10K: Other PT Losses	0.31	-0.92	-0.92	0.13	0.13	-0.55	2.16
19	2	D10K: D10K: Other PT Losses	0.31	-1.62	-1.63	0.02	0.03	-1.04	3.22
20	0	D10K: D10K: Other PT Losses	0.31	-1.62	-1.63	0.02	0.03	-1.04	3.22
20	1	D10K: D10K: Other PT Losses	0.31	-0.74	-0.75	0.15	0.16	-0.42	1.89
20	2	D10K: D10K: Other PT Losses	0.31	1.73	1.73	0.51	0.52	1.30	-1.82
21	0	D10K: D10K: Other PT Losses	0.31	1.73	1.73	0.51	0.52	1.30	-1.82
21	1	D10K: D10K: Other PT Losses	0.31	2.33	2.33	0.60	0.61	1.72	-2.72
21	2	D10K: D10K: Other PT Losses	0.31	2.98	2.98	0.70	0.70	2.17	-3.70
22	0	D10K: D10K: Other PT Losses	0.13	2.52	2.51	0.47	0.48	1.79	-3.46
22	1	D10K: D10K: Other PT Losses	0.13	2.91	2.91	0.53	0.54	2.06	-4.06
22	2	D10K: D10K: Other PT Losses	0.13	3.31	3.30	0.59	0.60	2.34	-4.65
23	0	D10K: D10K: Other PT Losses	-0.28	2.79	2.78	0.16	0.17	1.85	-4.90
23	1	D10K: D10K: Other PT Losses	-0.28	2.19	2.18	0.07	0.08	1.43	-3.99
23	2	D10K: D10K: Other PT Losses	-0.28	1.62	1.62	-0.01	0.00	1.04	-3.14
24	0	D10K: D10K: Other PT Losses	-0.28	1.62	1.62	-0.01	0.00	1.04	-3.14
24	1	D10K: D10K: Other PT Losses	-0.28	-1.10	-1.11	-0.41	-0.40	-0.86	0.96
24	2	D10K: D10K: Other PT Losses	-0.28	-2.01	-2.02	-0.54	-0.53	-1.49	2.32
25	0	D10K: D10K: Other PT Losses	-0.28	-2.01	-2.02	-0.54	-0.53	-1.49	2.32
25	1	D10K: D10K: Other PT Losses	-0.28	-1.10	-1.10	-0.40	-0.40	-0.85	0.95
25	2	D10K: D10K: Other PT Losses	-0.28	1.64	1.63	0.00	0.00	1.05	-3.16
26	0	D10K: D10K: Other PT Losses	-0.28	1.64	1.63	0.00	0.00	1.05	-3.16
26	1	D10K: D10K: Other PT Losses	-0.28	2.63	2.63	0.14	0.15	1.75	-4.65
26	2	D10K: D10K: Other PT Losses	-0.28	3.75	3.74	0.30	0.31	2.52	-6.33
29	0	D10K: D10K: Other PT Losses	-0.71	2.58	2.59	-0.22	-0.23	1.59	-5.67
29	1	D10K: D10K: Other PT Losses	-0.71	1.49	1.50	-0.38	-0.39	0.82	-4.02
29	2	D10K: D10K: Other PT Losses	-0.71	0.51	0.52	-0.53	-0.53	0.15	-2.55
30	0	D10K: D10K: Other PT Losses	-0.71	0.51	0.52	-0.53	-0.53	0.15	-2.55
30	1	D10K: D10K: Other PT Losses	-0.71	-2.11	-2.10	-0.91	-0.92	-1.68	1.40
30	2	D10K: D10K: Other PT Losses	-0.71	-2.91	-2.91	-1.03	-1.03	-2.24	2.61
31	0	D10K: D10K: Other PT Losses	-0.71	-2.91	-2.91	-1.03	-1.03	-2.24	2.61
31	1	D10K: D10K: Other PT Losses	-0.71	-1.90	-1.89	-0.88	-0.88	-1.53	1.08
31	2	D10K: D10K: Other PT Losses	-0.71	0.94	0.95	-0.46	-0.47	0.44	-3.19
32	0	D10K: D10K: Other PT Losses	-0.71	0.94	0.95	-0.46	-0.47	0.44	-3.19
32	1	D10K: D10K: Other PT Losses	-0.71	1.51	1.52	-0.38	-0.38	0.84	-4.04
32	2	D10K: D10K: Other PT Losses	-0.71	2.12	2.13	-0.29	-0.29	1.26	-4.96
33	0	D10K: D10K: Other PT Losses	-0.56	2.10	2.10	-0.17	-0.17	1.29	-4.55
33	1	D10K: D10K: Other PT Losses	-0.56	2.08	2.09	-0.17	-0.17	1.28	-4.53
33	2	D10K: D10K: Other PT Losses	-0.56	2.06	2.07	-0.17	-0.18	1.27	-4.50
34	0	D10K: D10K: Other PT Losses	-0.56	1.95	1.96	-0.19	-0.19	1.19	-4.34
34	1	D10K: D10K: Other PT Losses	-0.56	1.66	1.67	-0.23	-0.23	0.99	-3.90
34	2	D10K: D10K: Other PT Losses	-0.56	1.39	1.40	-0.27	-0.27	0.80	-3.49

MEMBER STRESSES

DECK & CANOPY MEMBERS
D10K

(-) compression

			NONSTRUCTURAL COMPONENTS (DC)						
Member	Station	Result Case	(P/A) @ Centroid (kips/ft²)	Normal Stress @ Point 1 (kips/ft²)	Normal Stress @ Point 2 (kips/ft²)	Normal Stress @ Point 3 (kips/ft²)	Normal Stress @ Point 4 (kips/ft²)	Normal Stress @ Point 5 (kips/ft²)	Normal Stress @ Point 6 (kips/ft²)
35	0	D10K: D10K: Other PT Losses	-0.56	1.39	1.40	-0.27	-0.27	0.80	-3.49
35	1	D10K: D10K: Other PT Losses	-0.56	0.68	0.68	-0.37	-0.38	0.30	-2.42
35	2	D10K: D10K: Other PT Losses	-0.56	0.16	0.16	-0.45	-0.45	-0.06	-1.63
36	0	D10K: D10K: Other PT Losses	-0.56	0.16	0.16	-0.45	-0.45	-0.06	-1.63
36	1	D10K: D10K: Other PT Losses	-0.56	-0.17	-0.16	-0.50	-0.50	-0.29	-1.14
36	2	D10K: D10K: Other PT Losses	-0.56	-0.30	-0.30	-0.52	-0.52	-0.38	-0.94
37	0	D10K: D10K: Other PT Losses	-0.56	-0.30	-0.30	-0.52	-0.52	-0.38	-0.94
37	1	D10K: D10K: Other PT Losses	-0.56	-0.30	-0.29	-0.52	-0.52	-0.37	-0.95
37	2	D10K: D10K: Other PT Losses	-0.56	-0.24	-0.23	-0.51	-0.51	-0.33	-1.04
38	0	D10K: D10K: Other PT Losses	-0.47	-0.06	-0.05	-0.41	-0.41	-0.18	-1.09
38	1	D10K: D10K: Other PT Losses	-0.47	-0.09	-0.09	-0.41	-0.42	-0.21	-1.04
38	2	D10K: D10K: Other PT Losses	-0.47	-0.12	-0.12	-0.42	-0.42	-0.23	-0.99
39	0	D10K: D10K: Other PT Losses	-0.47	0.04	0.05	-0.39	-0.39	-0.11	-1.23
39	1	D10K: D10K: Other PT Losses	-0.47	-0.11	-0.11	-0.41	-0.41	-0.22	-1.00
39	2	D10K: D10K: Other PT Losses	-0.47	-0.25	-0.25	-0.43	-0.44	-0.31	-0.79
40	0	D10K: D10K: Other PT Losses	-0.47	-0.25	-0.25	-0.43	-0.44	-0.31	-0.79
40	1	D10K: D10K: Other PT Losses	-0.46	-0.56	-0.55	-0.48	-0.48	-0.53	-0.33
40	2	D10K: D10K: Other PT Losses	-0.46	-0.70	-0.70	-0.50	-0.50	-0.63	-0.11
41	0	D10K: D10K: Other PT Losses	-0.46	-0.70	-0.70	-0.50	-0.50	-0.63	-0.11
41	1	D10K: D10K: Other PT Losses	-0.46	-0.69	-0.68	-0.50	-0.50	-0.62	-0.13
41	2	D10K: D10K: Other PT Losses	-0.46	-0.51	-0.51	-0.47	-0.47	-0.50	-0.39
42	0	D10K: D10K: Other PT Losses	-0.46	-0.51	-0.51	-0.47	-0.47	-0.50	-0.39
42	1	D10K: D10K: Other PT Losses	-0.46	-0.33	-0.32	-0.44	-0.44	-0.37	-0.67
42	2	D10K: D10K: Other PT Losses	-0.46	-0.08	-0.07	-0.41	-0.41	-0.19	-1.05
43	0	D10K: D10K: Other PT Losses	-0.34	0.10	0.10	-0.27	-0.27	-0.03	-0.99
43	1	D10K: D10K: Other PT Losses	-0.34	0.07	0.07	-0.28	-0.28	-0.05	-0.95
43	2	D10K: D10K: Other PT Losses	-0.34	0.04	0.04	-0.28	-0.28	-0.07	-0.90
44	0	D10K: D10K: Other PT Losses	-0.33	0.21	0.21	-0.25	-0.25	0.05	-1.13
44	1	D10K: D10K: Other PT Losses	-0.33	0.03	0.03	-0.27	-0.28	-0.08	-0.86
44	2	D10K: D10K: Other PT Losses	-0.33	-0.13	-0.13	-0.30	-0.30	-0.19	-0.62
45	0	D10K: D10K: Other PT Losses	-0.33	-0.13	-0.13	-0.30	-0.30	-0.19	-0.62
45	1	D10K: D10K: Other PT Losses	-0.33	-0.48	-0.48	-0.35	-0.35	-0.44	-0.09
45	2	D10K: D10K: Other PT Losses	-0.33	-0.70	-0.70	-0.38	-0.38	-0.59	0.24
46	0	D10K: D10K: Other PT Losses	-0.33	-0.70	-0.70	-0.38	-0.38	-0.59	0.24
46	1	D10K: D10K: Other PT Losses	-0.33	-0.78	-0.78	-0.39	-0.39	-0.64	0.35
46	2	D10K: D10K: Other PT Losses	-0.33	-0.72	-0.72	-0.38	-0.38	-0.60	0.27
47	0	D10K: D10K: Other PT Losses	-0.33	-0.72	-0.72	-0.38	-0.38	-0.60	0.27
47	1	D10K: D10K: Other PT Losses	-0.33	-0.59	-0.59	-0.36	-0.37	-0.51	0.08
47	2	D10K: D10K: Other PT Losses	-0.33	-0.40	-0.40	-0.33	-0.34	-0.37	-0.22
48	0	D10K: D10K: Other PT Losses	-0.23	-0.28	-0.28	-0.24	-0.24	-0.27	-0.16
48	1	D10K: D10K: Other PT Losses	-0.23	-0.30	-0.30	-0.24	-0.24	-0.28	-0.14
48	2	D10K: D10K: Other PT Losses	-0.23	-0.31	-0.31	-0.24	-0.25	-0.29	-0.11
49	0	D10K: D10K: Other PT Losses	-0.27	-0.23	-0.23	-0.27	-0.27	-0.24	-0.34
49	1	D10K: D10K: Other PT Losses	-0.27	-0.01	-0.01	-0.23	-0.24	-0.09	-0.67
49	2	D10K: D10K: Other PT Losses	-0.27	0.23	0.23	-0.20	-0.20	0.08	-1.03
50	0	D10K: D10K: Other PT Losses	-0.27	0.23	0.23	-0.20	-0.20	0.08	-1.03
50	1	D10K: D10K: Other PT Losses	-0.27	0.95	0.95	-0.09	-0.09	0.58	-2.11
50	2	D10K: D10K: Other PT Losses	-0.27	1.79	1.79	0.03	0.03	1.17	-3.38

MEMBER STRESSES

DECK & CANOPY MEMBERS
D10K

(-) compression

			NONSTRUCTURAL COMPONENTS (DC)						
Member	Station	Result Case	(P/A) @ Centroid (kips/ft²)	Normal Stress @ Point 1 (kips/ft²)	Normal Stress @ Point 2 (kips/ft²)	Normal Stress @ Point 3 (kips/ft²)	Normal Stress @ Point 4 (kips/ft²)	Normal Stress @ Point 5 (kips/ft²)	Normal Stress @ Point 6 (kips/ft²)
51	0	D10K: D10K: Other PT Losses	-0.27	1.79	1.79	0.03	0.03	1.17	-3.38
51	1	D10K: D10K: Other PT Losses	-0.27	2.76	2.76	0.17	0.17	1.84	-4.83
51	2	D10K: D10K: Other PT Losses	-0.27	3.85	3.85	0.33	0.33	2.59	-6.47
52	0	D10K: D10K: Other PT Losses	-0.27	3.85	3.85	0.33	0.33	2.59	-6.47
52	1	D10K: D10K: Other PT Losses	-0.27	4.80	4.80	0.47	0.47	3.26	-7.89
52	2	D10K: D10K: Other PT Losses	-0.27	5.82	5.82	0.62	0.62	3.97	-9.44
60	0	D10K: D10K: Other PT Losses	0.00	0.00	0.00	0.00	0.00	0.00	0.00
60	1	D10K: D10K: Other PT Losses	0.00	0.00	0.00	0.00	0.00	0.00	0.00
60	2	D10K: D10K: Other PT Losses	0.00	0.00	0.00	0.00	0.00	0.00	0.00
101	0	D10K: D10K: Other PT Losses	-0.16	3.76	3.76	-4.47	-4.47	2.88	-0.97
101	1	D10K: D10K: Other PT Losses	-0.16	3.51	3.51	-4.20	-4.20	2.69	-0.92
101	2	D10K: D10K: Other PT Losses	-0.16	3.26	3.26	-3.92	-3.92	2.50	-0.87
102	0	D10K: D10K: Other PT Losses	-0.16	3.26	3.26	-3.92	-3.92	2.50	-0.87
102	1	D10K: D10K: Other PT Losses	-0.16	1.77	1.77	-2.29	-2.29	1.34	-0.56
102	2	D10K: D10K: Other PT Losses	-0.16	0.27	0.27	-0.65	-0.65	0.18	-0.26
103	0	D10K: D10K: Other PT Losses	-0.16	0.27	0.27	-0.65	-0.65	0.18	-0.26
103	1	D10K: D10K: Other PT Losses	-0.16	-1.20	-1.20	0.97	0.97	-0.97	0.05
103	2	D10K: D10K: Other PT Losses	-0.16	-2.67	-2.67	2.59	2.59	-2.11	0.35
104	0	D10K: D10K: Other PT Losses	-0.16	-2.67	-2.67	2.59	2.59	-2.11	0.35
104	1	D10K: D10K: Other PT Losses	-0.16	-3.08	-3.08	3.03	3.03	-2.43	0.44
104	2	D10K: D10K: Other PT Losses	-0.16	-3.49	-3.49	3.48	3.48	-2.75	0.52
106	0	D10K: D10K: Other PT Losses	-2.17	-0.94	-0.94	-3.52	-3.52	-1.22	-2.42
106	1	D10K: D10K: Other PT Losses	-2.17	-1.06	-1.06	-3.39	-3.39	-1.31	-2.40
106	2	D10K: D10K: Other PT Losses	-2.17	-1.17	-1.17	-3.27	-3.27	-1.40	-2.38
107	0	D10K: D10K: Other PT Losses	-2.17	-1.17	-1.17	-3.27	-3.27	-1.40	-2.38
107	1	D10K: D10K: Other PT Losses	-2.17	-1.90	-1.90	-2.47	-2.47	-1.96	-2.23
107	2	D10K: D10K: Other PT Losses	-2.17	-2.62	-2.62	-1.68	-1.68	-2.52	-2.08
108	0	D10K: D10K: Other PT Losses	-2.17	-2.62	-2.62	-1.68	-1.68	-2.52	-2.08
108	1	D10K: D10K: Other PT Losses	-2.17	-3.29	-3.29	-0.94	-0.94	-3.04	-1.94
108	2	D10K: D10K: Other PT Losses	-2.17	-3.97	-3.97	-0.20	-0.20	-3.57	-1.80
109	0	D10K: D10K: Other PT Losses	-2.17	-3.97	-3.97	-0.20	-0.20	-3.57	-1.80
109	1	D10K: D10K: Other PT Losses	-2.17	-4.22	-4.22	0.08	0.08	-3.76	-1.75
109	2	D10K: D10K: Other PT Losses	-2.17	-4.47	-4.47	0.36	0.36	-3.96	-1.70
111	0	D10K: D10K: Other PT Losses	-3.02	-4.17	-4.17	-1.75	-1.75	-3.91	-2.78
111	1	D10K: D10K: Other PT Losses	-3.02	-4.11	-4.11	-1.82	-1.82	-3.87	-2.79
111	2	D10K: D10K: Other PT Losses	-3.02	-4.05	-4.05	-1.88	-1.88	-3.82	-2.80
112	0	D10K: D10K: Other PT Losses	-3.02	-4.05	-4.05	-1.88	-1.88	-3.82	-2.80
112	1	D10K: D10K: Other PT Losses	-3.02	-3.81	-3.81	-2.14	-2.14	-3.64	-2.85
112	2	D10K: D10K: Other PT Losses	-3.02	-3.58	-3.58	-2.40	-2.40	-3.45	-2.90
113	0	D10K: D10K: Other PT Losses	-3.02	-3.58	-3.58	-2.40	-2.40	-3.45	-2.90
113	1	D10K: D10K: Other PT Losses	-3.02	-3.32	-3.32	-2.69	-2.69	-3.25	-2.95
113	2	D10K: D10K: Other PT Losses	-3.02	-3.05	-3.05	-2.97	-2.97	-3.05	-3.01
114	0	D10K: D10K: Other PT Losses	-3.02	-3.05	-3.05	-2.97	-2.97	-3.05	-3.01
114	1	D10K: D10K: Other PT Losses	-3.02	-3.00	-3.00	-3.04	-3.04	-3.00	-3.02
114	2	D10K: D10K: Other PT Losses	-3.02	-2.94	-2.94	-3.10	-3.10	-2.96	-3.03
116	0	D10K: D10K: Other PT Losses	-2.87	-4.16	-4.16	-1.44	-1.44	-3.87	-2.60
116	1	D10K: D10K: Other PT Losses	-2.87	-4.08	-4.09	-1.53	-1.53	-3.81	-2.61
116	2	D10K: D10K: Other PT Losses	-2.87	-4.01	-4.01	-1.61	-1.61	-3.75	-2.63

MEMBER STRESSES

DECK & CANOPY MEMBERS
D10K

(-) compression

			NONSTRUCTURAL COMPONENTS (DC)						
Member	Station	Result Case	(P/A) @ Centroid (kips/ft²)	Normal Stress @ Point 1 (kips/ft²)	Normal Stress @ Point 2 (kips/ft²)	Normal Stress @ Point 3 (kips/ft²)	Normal Stress @ Point 4 (kips/ft²)	Normal Stress @ Point 5 (kips/ft²)	Normal Stress @ Point 6 (kips/ft²)
117	0	D10K: D10K: Other PT Losses	-2.87	-4.01	-4.01	-1.61	-1.61	-3.75	-2.63
117	1	D10K: D10K: Other PT Losses	-2.87	-3.55	-3.55	-2.12	-2.12	-3.39	-2.73
117	2	D10K: D10K: Other PT Losses	-2.87	-3.09	-3.09	-2.62	-2.62	-3.04	-2.82
118	0	D10K: D10K: Other PT Losses	-2.87	-3.09	-3.09	-2.62	-2.62	-3.04	-2.82
118	1	D10K: D10K: Other PT Losses	-2.87	-2.61	-2.61	-3.14	-3.14	-2.67	-2.92
118	2	D10K: D10K: Other PT Losses	-2.87	-2.14	-2.14	-3.66	-3.66	-2.30	-3.02
119	0	D10K: D10K: Other PT Losses	-2.87	-2.14	-2.14	-3.66	-3.66	-2.30	-3.02
119	1	D10K: D10K: Other PT Losses	-2.87	-2.05	-2.05	-3.76	-3.76	-2.23	-3.03
119	2	D10K: D10K: Other PT Losses	-2.87	-1.97	-1.97	-3.85	-3.85	-2.17	-3.05
121	0	D10K: D10K: Other PT Losses	-1.65	-2.75	-2.75	-0.44	-0.44	-2.51	-1.42
121	1	D10K: D10K: Other PT Losses	-1.65	-2.69	-2.69	-0.51	-0.51	-2.46	-1.44
121	2	D10K: D10K: Other PT Losses	-1.65	-2.63	-2.63	-0.57	-0.57	-2.42	-1.45
122	0	D10K: D10K: Other PT Losses	-1.65	-2.63	-2.63	-0.57	-0.57	-2.42	-1.45
122	1	D10K: D10K: Other PT Losses	-1.65	-2.18	-2.18	-1.07	-1.07	-2.06	-1.54
122	2	D10K: D10K: Other PT Losses	-1.65	-1.73	-1.73	-1.57	-1.57	-1.71	-1.64
123	0	D10K: D10K: Other PT Losses	-1.65	-1.73	-1.73	-1.57	-1.57	-1.71	-1.64
123	1	D10K: D10K: Other PT Losses	-1.65	-1.27	-1.27	-2.07	-2.07	-1.36	-1.73
123	2	D10K: D10K: Other PT Losses	-1.65	-0.82	-0.82	-2.57	-2.57	-1.00	-1.82
124	0	D10K: D10K: Other PT Losses	-1.65	-0.82	-0.82	-2.57	-2.57	-1.00	-1.82
124	1	D10K: D10K: Other PT Losses	-1.65	-0.77	-0.77	-2.62	-2.62	-0.96	-1.83
124	2	D10K: D10K: Other PT Losses	-1.65	-0.71	-0.71	-2.68	-2.68	-0.92	-1.84
126	0	D10K: D10K: Other PT Losses	0.42	-1.56	-1.56	2.59	2.59	-1.12	0.82
126	1	D10K: D10K: Other PT Losses	0.42	-1.34	-1.34	2.34	2.34	-0.95	0.78
126	2	D10K: D10K: Other PT Losses	0.42	-1.12	-1.12	2.10	2.10	-0.78	0.73
127	0	D10K: D10K: Other PT Losses	0.42	-1.12	-1.12	2.10	2.10	-0.78	0.73
127	1	D10K: D10K: Other PT Losses	0.42	-0.29	-0.29	1.19	1.19	-0.13	0.56
127	2	D10K: D10K: Other PT Losses	0.42	0.53	0.53	0.29	0.29	0.51	0.39
128	0	D10K: D10K: Other PT Losses	0.42	0.53	0.53	0.29	0.29	0.51	0.39
128	1	D10K: D10K: Other PT Losses	0.42	1.37	1.37	-0.63	-0.63	1.16	0.22
133	0	D10K: D10K: Other PT Losses	0.60	1.23	1.24	-0.09	-0.10	1.09	0.47
133	1	D10K: D10K: Other PT Losses	0.60	1.09	1.09	0.07	0.07	0.98	0.50
133	2	D10K: D10K: Other PT Losses	0.60	0.94	0.94	0.23	0.23	0.87	0.53
134	0	D10K: D10K: Other PT Losses	0.60	0.94	0.94	0.23	0.23	0.87	0.53
134	1	D10K: D10K: Other PT Losses	0.60	0.79	0.79	0.39	0.39	0.75	0.56
134	2	D10K: D10K: Other PT Losses	0.60	0.64	0.65	0.56	0.55	0.63	0.59
135	0	D10K: D10K: Other PT Losses	0.60	0.64	0.65	0.56	0.55	0.63	0.59
135	1	D10K: D10K: Other PT Losses	0.60	0.61	0.61	0.60	0.60	0.61	0.60
135	2	D10K: D10K: Other PT Losses	0.60	0.57	0.57	0.64	0.64	0.58	0.61
137	0	D10K: D10K: Other PT Losses	0.30	0.97	0.97	-0.44	-0.44	0.82	0.16
137	1	D10K: D10K: Other PT Losses	0.30	0.90	0.90	-0.36	-0.36	0.76	0.17
137	2	D10K: D10K: Other PT Losses	0.30	0.83	0.83	-0.29	-0.29	0.71	0.19
138	0	D10K: D10K: Other PT Losses	0.30	0.83	0.83	-0.29	-0.29	0.71	0.19
138	1	D10K: D10K: Other PT Losses	0.30	0.62	0.62	-0.06	-0.06	0.55	0.23
138	2	D10K: D10K: Other PT Losses	0.30	0.41	0.41	0.17	0.17	0.39	0.27
139	0	D10K: D10K: Other PT Losses	0.30	0.41	0.41	0.17	0.17	0.39	0.27
139	1	D10K: D10K: Other PT Losses	0.30	0.19	0.20	0.41	0.41	0.22	0.32
139	2	D10K: D10K: Other PT Losses	0.30	-0.03	-0.02	0.65	0.65	0.05	0.36

MEMBER STRESSES

DECK & CANOPY MEMBERS
D10K

(-) compression

			NONSTRUCTURAL COMPONENTS (DC)						
Member	Station	Result Case	(P/A) @ Centroid (kips/ft²)	Normal Stress @ Point 1 (kips/ft²)	Normal Stress @ Point 2 (kips/ft²)	Normal Stress @ Point 3 (kips/ft²)	Normal Stress @ Point 4 (kips/ft²)	Normal Stress @ Point 5 (kips/ft²)	Normal Stress @ Point 6 (kips/ft²)
140	0	D10K: D10K: Other PT Losses	0.30	-0.03	-0.02	0.65	0.65	0.05	0.36
140	1	D10K: D10K: Other PT Losses	0.30	-0.09	-0.09	0.72	0.72	0.00	0.38
140	2	D10K: D10K: Other PT Losses	0.30	-0.15	-0.15	0.79	0.78	-0.05	0.39
142	0	D10K: D10K: Other PT Losses	0.47	0.45	0.45	0.49	0.49	0.45	0.47
142	1	D10K: D10K: Other PT Losses	0.47	0.45	0.45	0.49	0.49	0.46	0.47
142	2	D10K: D10K: Other PT Losses	0.47	0.45	0.45	0.49	0.49	0.46	0.47
143	0	D10K: D10K: Other PT Losses	0.47	0.45	0.45	0.49	0.49	0.46	0.47
143	1	D10K: D10K: Other PT Losses	0.47	0.45	0.45	0.49	0.49	0.46	0.47
143	2	D10K: D10K: Other PT Losses	0.47	0.45	0.45	0.49	0.49	0.46	0.47
144	0	D10K: D10K: Other PT Losses	0.47	0.45	0.45	0.49	0.49	0.46	0.47
144	1	D10K: D10K: Other PT Losses	0.47	0.46	0.46	0.48	0.48	0.46	0.47
144	2	D10K: D10K: Other PT Losses	0.47	0.46	0.46	0.48	0.48	0.47	0.47
145	0	D10K: D10K: Other PT Losses	0.47	0.46	0.46	0.48	0.48	0.47	0.47
145	1	D10K: D10K: Other PT Losses	0.47	0.46	0.46	0.48	0.48	0.46	0.47
145	2	D10K: D10K: Other PT Losses	0.47	0.46	0.46	0.49	0.48	0.46	0.47
147	0	D10K: D10K: Other PT Losses	0.47	1.47	1.48	-0.64	-0.64	1.25	0.26
147	1	D10K: D10K: Other PT Losses	0.47	1.33	1.33	-0.48	-0.48	1.14	0.29
147	2	D10K: D10K: Other PT Losses	0.47	1.18	1.18	-0.31	-0.31	1.02	0.32
148	0	D10K: D10K: Other PT Losses	0.47	1.18	1.18	-0.31	-0.31	1.02	0.32
148	1	D10K: D10K: Other PT Losses	0.47	0.91	0.91	-0.02	-0.02	0.81	0.38
148	2	D10K: D10K: Other PT Losses	0.47	0.64	0.64	0.28	0.28	0.60	0.43
149	0	D10K: D10K: Other PT Losses	0.47	0.64	0.64	0.28	0.28	0.60	0.43
149	1	D10K: D10K: Other PT Losses	0.47	0.35	0.35	0.60	0.60	0.38	0.49
149	2	D10K: D10K: Other PT Losses	0.47	0.06	0.06	0.91	0.91	0.15	0.55
150	0	D10K: D10K: Other PT Losses	0.47	0.06	0.06	0.91	0.91	0.15	0.55
150	1	D10K: D10K: Other PT Losses	0.47	-0.03	-0.03	1.01	1.01	0.08	0.57
150	2	D10K: D10K: Other PT Losses	0.47	-0.12	-0.11	1.11	1.11	0.01	0.59
152	0	D10K: D10K: Other PT Losses	0.47	1.09	1.09	-0.22	-0.22	0.95	0.34
152	1	D10K: D10K: Other PT Losses	0.47	1.00	1.00	-0.12	-0.12	0.88	0.36
152	2	D10K: D10K: Other PT Losses	0.47	0.92	0.92	-0.03	-0.03	0.82	0.37
153	0	D10K: D10K: Other PT Losses	0.47	0.92	0.92	-0.03	-0.03	0.82	0.37
153	1	D10K: D10K: Other PT Losses	0.47	0.77	0.77	0.13	0.13	0.71	0.40
153	2	D10K: D10K: Other PT Losses	0.47	0.63	0.63	0.29	0.29	0.59	0.43
154	0	D10K: D10K: Other PT Losses	0.47	0.63	0.63	0.29	0.29	0.59	0.43
154	1	D10K: D10K: Other PT Losses	0.47	0.48	0.48	0.46	0.46	0.48	0.47
154	2	D10K: D10K: Other PT Losses	0.47	0.33	0.33	0.62	0.62	0.36	0.50
155	0	D10K: D10K: Other PT Losses	0.47	0.33	0.33	0.62	0.62	0.36	0.50
155	1	D10K: D10K: Other PT Losses	0.47	0.28	0.28	0.68	0.68	0.32	0.51
155	2	D10K: D10K: Other PT Losses	0.47	0.22	0.22	0.74	0.73	0.28	0.52
157	0	D10K: D10K: Other PT Losses	0.20	2.72	2.72	-2.56	-2.56	2.16	-0.31
157	1	D10K: D10K: Other PT Losses	0.20	2.32	2.32	-2.12	-2.12	1.85	-0.23
157	2	D10K: D10K: Other PT Losses	0.20	1.92	1.92	-1.68	-1.68	1.54	-0.15
158	0	D10K: D10K: Other PT Losses	0.20	1.92	1.92	-1.68	-1.68	1.54	-0.15
158	1	D10K: D10K: Other PT Losses	0.20	0.65	0.65	-0.28	-0.28	0.55	0.11
158	2	D10K: D10K: Other PT Losses	0.20	-0.63	-0.63	1.12	1.12	-0.44	0.37
159	0	D10K: D10K: Other PT Losses	0.20	-0.63	-0.63	1.12	1.12	-0.44	0.37
159	1	D10K: D10K: Other PT Losses	0.20	-1.92	-1.92	2.53	2.53	-1.45	0.64
159	2	D10K: D10K: Other PT Losses	0.20	-3.21	-3.21	3.95	3.95	-2.45	0.91

MEMBER STRESSES

DECK & CANOPY MEMBERS
D10K

(-) compression

			CREEP (CR)						
Member	Station	Result Case	(P/A) @ Centroid (kips/ft²)	Normal Stress @ Point 1 (kips/ft²)	Normal Stress @ Point 2 (kips/ft²)	Normal Stress @ Point 3 (kips/ft²)	Normal Stress @ Point 4 (kips/ft²)	Normal Stress @ Point 5 (kips/ft²)	Normal Stress @ Point 6 (kips/ft²)
1	0	D10K: D10K: Other PT Losses	1.96	72.12	72.12	12.22	12.22	50.80	-103.51
1	1	D10K: D10K: Other PT Losses	1.96	72.29	72.29	12.25	12.25	50.92	-103.77
1	2	D10K: D10K: Other PT Losses	1.96	72.46	72.46	12.27	12.27	51.03	-104.02
2	0	D10K: D10K: Other PT Losses	2.39	67.41	67.41	11.90	11.90	47.65	-95.35
2	1	D10K: D10K: Other PT Losses	2.39	68.24	68.24	12.02	12.02	48.23	-96.60
2	2	D10K: D10K: Other PT Losses	2.39	69.07	69.07	12.14	12.15	48.80	-97.85
3	0	D10K: D10K: Other PT Losses	-0.79	52.81	52.81	7.05	7.05	36.52	-81.37
3	1	D10K: D10K: Other PT Losses	-0.79	46.09	46.08	6.06	6.07	31.84	-71.26
3	2	D10K: D10K: Other PT Losses	-0.79	39.36	39.36	5.08	5.09	27.16	-61.15
4	0	D10K: D10K: Other PT Losses	-0.79	39.36	39.36	5.08	5.09	27.16	-61.15
4	1	D10K: D10K: Other PT Losses	-0.79	24.96	24.95	2.97	2.98	17.13	-39.49
4	2	D10K: D10K: Other PT Losses	-0.79	10.55	10.54	0.86	0.88	7.10	-17.83
5	0	D10K: D10K: Other PT Losses	-0.79	10.55	10.54	0.86	0.88	7.10	-17.83
5	1	D10K: D10K: Other PT Losses	-0.79	-3.84	-3.86	-1.25	-1.23	-2.92	3.81
5	2	D10K: D10K: Other PT Losses	-0.79	-18.23	-18.26	-3.35	-3.33	-12.94	25.45
6	0	D10K: D10K: Other PT Losses	-0.79	-18.23	-18.26	-3.35	-3.33	-12.94	25.45
6	1	D10K: D10K: Other PT Losses	-0.79	-20.16	-20.18	-3.64	-3.61	-14.28	28.35
6	2	D10K: D10K: Other PT Losses	-0.79	-22.08	-22.11	-3.92	-3.89	-15.62	31.24
7	0	D10K: D10K: Other PT Losses	0.01	-18.44	-18.47	-2.70	-2.67	-12.84	27.78
7	1	D10K: D10K: Other PT Losses	0.01	-16.98	-17.01	-2.49	-2.46	-11.83	25.59
7	2	D10K: D10K: Other PT Losses	0.01	-15.52	-15.55	-2.27	-2.25	-10.81	23.39
8	0	D10K: D10K: Other PT Losses	-2.28	-16.18	-16.21	-4.32	-4.30	-11.96	18.65
8	1	D10K: D10K: Other PT Losses	-2.28	-15.11	-15.14	-4.17	-4.14	-11.22	17.04
8	2	D10K: D10K: Other PT Losses	-2.28	-14.04	-14.07	-4.01	-3.98	-10.47	15.42
9	0	D10K: D10K: Other PT Losses	-2.28	-14.04	-14.07	-4.01	-3.98	-10.47	15.42
9	1	D10K: D10K: Other PT Losses	-2.28	-11.35	-11.38	-3.62	-3.59	-8.60	11.39
9	2	D10K: D10K: Other PT Losses	-2.28	-8.66	-8.70	-3.23	-3.19	-6.73	7.35
10	0	D10K: D10K: Other PT Losses	-2.28	-8.66	-8.70	-3.23	-3.19	-6.73	7.35
10	1	D10K: D10K: Other PT Losses	-2.28	-5.97	-6.01	-2.84	-2.80	-4.86	3.31
10	2	D10K: D10K: Other PT Losses	-2.28	-3.28	-3.33	-2.45	-2.40	-2.99	-0.73
11	0	D10K: D10K: Other PT Losses	-2.28	-3.28	-3.33	-2.45	-2.40	-2.99	-0.73
11	1	D10K: D10K: Other PT Losses	-2.28	-2.92	-2.97	-2.40	-2.35	-2.74	-1.27
11	2	D10K: D10K: Other PT Losses	-2.28	-2.56	-2.61	-2.35	-2.30	-2.49	-1.82
12	0	D10K: D10K: Other PT Losses	-2.39	-6.52	-6.57	-3.03	-2.98	-5.29	3.85
12	1	D10K: D10K: Other PT Losses	-2.39	-5.07	-5.12	-2.81	-2.76	-4.28	1.67
12	2	D10K: D10K: Other PT Losses	-2.39	-3.62	-3.67	-2.60	-2.55	-3.26	-0.51
13	0	D10K: D10K: Other PT Losses	-4.64	-5.38	-5.43	-4.78	-4.73	-5.17	-3.50
13	1	D10K: D10K: Other PT Losses	-4.64	-5.55	-5.60	-4.80	-4.75	-5.29	-3.24
13	2	D10K: D10K: Other PT Losses	-4.64	-5.71	-5.77	-4.83	-4.78	-5.41	-2.99
14	0	D10K: D10K: Other PT Losses	-4.64	-5.71	-5.77	-4.83	-4.78	-5.41	-2.99
14	1	D10K: D10K: Other PT Losses	-4.64	-6.25	-6.30	-4.91	-4.85	-5.78	-2.18
14	2	D10K: D10K: Other PT Losses	-4.64	-6.78	-6.84	-4.99	-4.93	-6.15	-1.38
15	0	D10K: D10K: Other PT Losses	-4.64	-6.78	-6.84	-4.99	-4.93	-6.15	-1.38
15	1	D10K: D10K: Other PT Losses	-4.64	-7.31	-7.38	-5.07	-5.00	-6.52	-0.58
15	2	D10K: D10K: Other PT Losses	-4.64	-7.84	-7.91	-5.15	-5.08	-6.89	0.22
16	0	D10K: D10K: Other PT Losses	-4.64	-7.84	-7.91	-5.15	-5.08	-6.89	0.22
16	1	D10K: D10K: Other PT Losses	-4.64	-7.90	-7.98	-5.16	-5.09	-6.94	0.32
16	2	D10K: D10K: Other PT Losses	-4.64	-7.96	-8.04	-5.17	-5.10	-6.98	0.41

MEMBER STRESSES

DECK & CANOPY MEMBERS
D10K

(-) compression

			CREEP (CR)						
Member	Station	Result Case	(P/A) @ Centroid (kips/ft²)	Normal Stress @ Point 1 (kips/ft²)	Normal Stress @ Point 2 (kips/ft²)	Normal Stress @ Point 3 (kips/ft²)	Normal Stress @ Point 4 (kips/ft²)	Normal Stress @ Point 5 (kips/ft²)	Normal Stress @ Point 6 (kips/ft²)
17	0	D10K: D10K: Other PT Losses	-4.76	-9.03	-9.11	-5.42	-5.35	-7.76	1.73
17	1	D10K: D10K: Other PT Losses	-4.76	-8.81	-8.88	-5.39	-5.32	-7.60	1.39
17	2	D10K: D10K: Other PT Losses	-4.76	-8.58	-8.65	-5.36	-5.28	-7.44	1.05
18	0	D10K: D10K: Other PT Losses	-4.99	-8.85	-8.93	-5.60	-5.53	-7.71	0.86
18	1	D10K: D10K: Other PT Losses	-4.99	-8.62	-8.70	-5.57	-5.49	-7.55	0.52
18	2	D10K: D10K: Other PT Losses	-4.99	-8.40	-8.48	-5.54	-5.46	-7.39	0.18
19	0	D10K: D10K: Other PT Losses	-4.99	-8.40	-8.48	-5.54	-5.46	-7.39	0.18
19	1	D10K: D10K: Other PT Losses	-4.99	-7.43	-7.51	-5.40	-5.31	-6.72	-1.27
19	2	D10K: D10K: Other PT Losses	-4.99	-6.46	-6.55	-5.26	-5.17	-6.05	-2.72
20	0	D10K: D10K: Other PT Losses	-4.99	-6.46	-6.55	-5.26	-5.17	-6.05	-2.72
20	1	D10K: D10K: Other PT Losses	-4.99	-5.49	-5.59	-5.12	-5.03	-5.38	-4.17
20	2	D10K: D10K: Other PT Losses	-4.99	-4.53	-4.63	-4.98	-4.88	-4.70	-5.62
21	0	D10K: D10K: Other PT Losses	-4.99	-4.53	-4.63	-4.98	-4.88	-4.70	-5.62
21	1	D10K: D10K: Other PT Losses	-4.99	-4.36	-4.46	-4.96	-4.86	-4.59	-5.88
21	2	D10K: D10K: Other PT Losses	-4.99	-4.18	-4.29	-4.94	-4.83	-4.47	-6.13
22	0	D10K: D10K: Other PT Losses	-3.46	-2.19	-2.29	-3.33	-3.23	-2.61	-5.29
22	1	D10K: D10K: Other PT Losses	-3.46	-4.04	-4.15	-3.61	-3.50	-3.90	-2.51
22	2	D10K: D10K: Other PT Losses	-3.46	-5.90	-6.00	-3.88	-3.77	-5.19	0.28
23	0	D10K: D10K: Other PT Losses	-2.16	-1.94	-2.05	-2.19	-2.09	-2.05	-2.41
23	1	D10K: D10K: Other PT Losses	-2.16	-2.40	-2.50	-2.26	-2.15	-2.36	-1.73
23	2	D10K: D10K: Other PT Losses	-2.16	-2.85	-2.96	-2.32	-2.22	-2.68	-1.05
24	0	D10K: D10K: Other PT Losses	-2.16	-2.85	-2.96	-2.32	-2.22	-2.68	-1.05
24	1	D10K: D10K: Other PT Losses	-2.16	-5.88	-5.99	-2.77	-2.66	-4.79	3.51
24	2	D10K: D10K: Other PT Losses	-2.16	-8.90	-9.02	-3.22	-3.10	-6.90	8.06
25	0	D10K: D10K: Other PT Losses	-2.16	-8.90	-9.02	-3.22	-3.10	-6.90	8.06
25	1	D10K: D10K: Other PT Losses	-2.16	-11.93	-12.06	-3.66	-3.54	-9.01	12.62
25	2	D10K: D10K: Other PT Losses	-2.16	-14.96	-15.09	-4.11	-3.98	-11.12	17.18
26	0	D10K: D10K: Other PT Losses	-2.16	-14.96	-15.09	-4.11	-3.98	-11.12	17.18
26	1	D10K: D10K: Other PT Losses	-2.16	-15.74	-15.87	-4.23	-4.09	-11.66	18.35
26	2	D10K: D10K: Other PT Losses	-2.16	-16.51	-16.65	-4.34	-4.20	-12.20	19.51
29	0	D10K: D10K: Other PT Losses	-1.18	-19.16	-19.28	-3.88	-3.76	-13.73	25.94
29	1	D10K: D10K: Other PT Losses	-1.18	-17.88	-17.99	-3.69	-3.57	-12.84	24.01
29	2	D10K: D10K: Other PT Losses	-1.18	-16.60	-16.71	-3.50	-3.39	-11.95	22.09
30	0	D10K: D10K: Other PT Losses	-1.18	-16.60	-16.71	-3.50	-3.39	-11.95	22.09
30	1	D10K: D10K: Other PT Losses	-1.18	-11.65	-11.75	-2.77	-2.67	-8.50	14.63
30	2	D10K: D10K: Other PT Losses	-1.18	-6.70	-6.79	-2.04	-1.95	-5.05	7.18
31	0	D10K: D10K: Other PT Losses	-1.18	-6.70	-6.79	-2.04	-1.95	-5.05	7.18
31	1	D10K: D10K: Other PT Losses	-1.18	-1.74	-1.83	-1.31	-1.23	-1.60	-0.27
31	2	D10K: D10K: Other PT Losses	-1.18	3.21	3.14	-0.58	-0.51	1.85	-7.72
32	0	D10K: D10K: Other PT Losses	-1.18	3.21	3.14	-0.58	-0.51	1.85	-7.72
32	1	D10K: D10K: Other PT Losses	-1.18	3.93	3.86	-0.47	-0.40	2.36	-8.81
32	2	D10K: D10K: Other PT Losses	-1.18	4.66	4.59	-0.37	-0.30	2.86	-9.91
33	0	D10K: D10K: Other PT Losses	-2.69	1.48	1.41	-2.12	-2.05	0.19	-8.89
33	1	D10K: D10K: Other PT Losses	-2.69	2.52	2.45	-1.96	-1.90	0.91	-10.45
33	2	D10K: D10K: Other PT Losses	-2.69	3.55	3.48	-1.81	-1.74	1.63	-12.01
34	0	D10K: D10K: Other PT Losses	-2.68	2.27	2.20	-2.00	-1.93	0.74	-10.07
34	1	D10K: D10K: Other PT Losses	-2.68	2.40	2.33	-1.98	-1.91	0.83	-10.26
34	2	D10K: D10K: Other PT Losses	-2.68	2.52	2.46	-1.96	-1.89	0.92	-10.46

MEMBER STRESSES

DECK & CANOPY MEMBERS
D10K

(-) compression

			CREEP (CR)						
Member	Station	Result Case	(P/A) @ Centroid (kips/ft²)	Normal Stress @ Point 1 (kips/ft²)	Normal Stress @ Point 2 (kips/ft²)	Normal Stress @ Point 3 (kips/ft²)	Normal Stress @ Point 4 (kips/ft²)	Normal Stress @ Point 5 (kips/ft²)	Normal Stress @ Point 6 (kips/ft²)
35	0	D10K: D10K: Other PT Losses	-2.68	2.52	2.46	-1.96	-1.89	0.92	-10.46
35	1	D10K: D10K: Other PT Losses	-2.68	2.92	2.86	-1.90	-1.84	1.20	-11.06
35	2	D10K: D10K: Other PT Losses	-2.68	3.32	3.26	-1.84	-1.78	1.48	-11.66
36	0	D10K: D10K: Other PT Losses	-2.68	3.32	3.26	-1.84	-1.78	1.48	-11.66
36	1	D10K: D10K: Other PT Losses	-2.68	3.72	3.66	-1.78	-1.72	1.75	-12.26
36	2	D10K: D10K: Other PT Losses	-2.68	4.12	4.06	-1.72	-1.66	2.03	-12.86
37	0	D10K: D10K: Other PT Losses	-2.68	4.12	4.06	-1.72	-1.66	2.03	-12.86
37	1	D10K: D10K: Other PT Losses	-2.68	4.32	4.27	-1.69	-1.64	2.18	-13.17
37	2	D10K: D10K: Other PT Losses	-2.68	4.53	4.48	-1.66	-1.61	2.32	-13.48
38	0	D10K: D10K: Other PT Losses	-2.40	4.79	4.74	-1.38	-1.33	2.59	-13.18
38	1	D10K: D10K: Other PT Losses	-2.40	4.66	4.61	-1.40	-1.35	2.50	-12.98
38	2	D10K: D10K: Other PT Losses	-2.40	4.53	4.48	-1.42	-1.37	2.41	-12.79
39	0	D10K: D10K: Other PT Losses	-2.37	6.03	5.98	-1.17	-1.12	3.46	-14.95
39	1	D10K: D10K: Other PT Losses	-2.37	5.67	5.62	-1.22	-1.17	3.21	-14.41
39	2	D10K: D10K: Other PT Losses	-2.37	5.32	5.27	-1.27	-1.22	2.97	-13.88
40	0	D10K: D10K: Other PT Losses	-2.37	5.32	5.27	-1.27	-1.22	2.97	-13.88
40	1	D10K: D10K: Other PT Losses	-2.37	4.26	4.22	-1.42	-1.38	2.23	-12.29
40	2	D10K: D10K: Other PT Losses	-2.37	3.20	3.16	-1.58	-1.53	1.50	-10.70
41	0	D10K: D10K: Other PT Losses	-2.37	3.20	3.16	-1.58	-1.53	1.50	-10.70
41	1	D10K: D10K: Other PT Losses	-2.37	2.14	2.10	-1.73	-1.69	0.76	-9.11
41	2	D10K: D10K: Other PT Losses	-2.37	1.08	1.05	-1.88	-1.85	0.02	-7.52
42	0	D10K: D10K: Other PT Losses	-2.37	1.08	1.05	-1.88	-1.85	0.02	-7.52
42	1	D10K: D10K: Other PT Losses	-2.37	0.43	0.39	-1.98	-1.94	-0.43	-6.54
42	2	D10K: D10K: Other PT Losses	-2.37	-0.23	-0.26	-2.07	-2.04	-0.89	-5.55
43	0	D10K: D10K: Other PT Losses	-0.73	2.39	2.36	-0.29	-0.26	1.43	-5.39
43	1	D10K: D10K: Other PT Losses	-0.73	1.56	1.53	-0.41	-0.38	0.85	-4.14
43	2	D10K: D10K: Other PT Losses	-0.73	0.73	0.70	-0.53	-0.50	0.27	-2.89
44	0	D10K: D10K: Other PT Losses	-1.03	4.01	3.98	-0.31	-0.28	2.47	-8.57
44	1	D10K: D10K: Other PT Losses	-1.03	3.33	3.30	-0.41	-0.38	1.99	-7.55
44	2	D10K: D10K: Other PT Losses	-1.03	2.65	2.62	-0.51	-0.48	1.52	-6.53
45	0	D10K: D10K: Other PT Losses	-1.03	2.65	2.62	-0.51	-0.48	1.52	-6.53
45	1	D10K: D10K: Other PT Losses	-1.03	0.75	0.72	-0.78	-0.75	0.20	-3.67
45	2	D10K: D10K: Other PT Losses	-1.03	-1.15	-1.18	-1.06	-1.03	-1.12	-0.82
46	0	D10K: D10K: Other PT Losses	-1.03	-1.15	-1.18	-1.06	-1.03	-1.12	-0.82
46	1	D10K: D10K: Other PT Losses	-1.03	-3.05	-3.07	-1.34	-1.31	-2.44	2.03
46	2	D10K: D10K: Other PT Losses	-1.03	-4.95	-4.97	-1.61	-1.59	-3.76	4.88
47	0	D10K: D10K: Other PT Losses	-1.03	-4.95	-4.97	-1.61	-1.59	-3.76	4.88
47	1	D10K: D10K: Other PT Losses	-1.03	-6.30	-6.32	-1.81	-1.79	-4.70	6.91
47	2	D10K: D10K: Other PT Losses	-1.03	-7.65	-7.67	-2.00	-1.99	-5.64	8.94
48	0	D10K: D10K: Other PT Losses	0.66	-4.97	-4.99	-0.17	-0.16	-3.27	9.14
48	1	D10K: D10K: Other PT Losses	0.66	-5.82	-5.84	-0.30	-0.28	-3.86	10.42
48	2	D10K: D10K: Other PT Losses	0.66	-6.68	-6.69	-0.42	-0.41	-4.45	11.70
49	0	D10K: D10K: Other PT Losses	0.06	-4.67	-4.69	-0.64	-0.63	-3.24	7.19
49	1	D10K: D10K: Other PT Losses	0.06	-4.62	-4.64	-0.63	-0.62	-3.21	7.11
49	2	D10K: D10K: Other PT Losses	0.06	-4.57	-4.59	-0.63	-0.61	-3.17	7.03
50	0	D10K: D10K: Other PT Losses	0.06	-4.57	-4.59	-0.63	-0.61	-3.17	7.03
50	1	D10K: D10K: Other PT Losses	0.06	-4.44	-4.45	-0.60	-0.59	-3.07	6.83
50	2	D10K: D10K: Other PT Losses	0.06	-4.30	-4.31	-0.58	-0.57	-2.98	6.62

MEMBER STRESSES

DECK & CANOPY MEMBERS
D10K

(-) compression

			CREEP (CR)						
Member	Station	Result Case	(P/A) @ Centroid (kips/ft²)	Normal Stress @ Point 1 (kips/ft²)	Normal Stress @ Point 2 (kips/ft²)	Normal Stress @ Point 3 (kips/ft²)	Normal Stress @ Point 4 (kips/ft²)	Normal Stress @ Point 5 (kips/ft²)	Normal Stress @ Point 6 (kips/ft²)
51	0	D10K: D10K: Other PT Losses	0.06	-4.30	-4.31	-0.58	-0.57	-2.98	6.62
51	1	D10K: D10K: Other PT Losses	0.06	-4.17	-4.17	-0.56	-0.56	-2.88	6.42
51	2	D10K: D10K: Other PT Losses	0.06	-4.03	-4.04	-0.54	-0.54	-2.79	6.21
52	0	D10K: D10K: Other PT Losses	0.06	-4.03	-4.04	-0.54	-0.54	-2.79	6.21
52	1	D10K: D10K: Other PT Losses	0.06	-3.92	-3.93	-0.52	-0.52	-2.71	6.05
52	2	D10K: D10K: Other PT Losses	0.06	-3.82	-3.82	-0.51	-0.51	-2.64	5.89
60	0	D10K: D10K: Other PT Losses	0.00	0.00	0.00	0.00	0.00	0.00	0.00
60	1	D10K: D10K: Other PT Losses	0.00	0.00	0.00	0.00	0.00	0.00	0.00
60	2	D10K: D10K: Other PT Losses	0.00	0.00	0.00	0.00	0.00	0.00	0.00
101	0	D10K: D10K: Other PT Losses	-5.44	169.15	169.15	-197.13	-197.13	130.24	-41.38
101	1	D10K: D10K: Other PT Losses	-5.44	160.70	160.70	-187.85	-187.85	123.68	-39.64
101	2	D10K: D10K: Other PT Losses	-5.44	152.25	152.25	-178.58	-178.58	117.11	-37.90
102	0	D10K: D10K: Other PT Losses	-5.44	152.25	152.25	-178.58	-178.58	117.11	-37.90
102	1	D10K: D10K: Other PT Losses	-5.44	101.73	101.73	-123.11	-123.11	77.85	-27.50
102	2	D10K: D10K: Other PT Losses	-5.44	51.21	51.21	-67.65	-67.64	38.59	-17.11
103	0	D10K: D10K: Other PT Losses	-5.44	51.21	51.21	-67.65	-67.64	38.59	-17.11
103	1	D10K: D10K: Other PT Losses	-5.44	1.37	1.37	-12.93	-12.93	-0.15	-6.85
103	2	D10K: D10K: Other PT Losses	-5.44	-48.46	-48.47	41.79	41.79	-38.88	3.41
104	0	D10K: D10K: Other PT Losses	-5.44	-48.46	-48.47	41.79	41.79	-38.88	3.41
104	1	D10K: D10K: Other PT Losses	-5.44	-62.29	-62.29	56.97	56.97	-49.62	6.26
104	2	D10K: D10K: Other PT Losses	-5.44	-76.11	-76.12	72.15	72.15	-60.37	9.11
106	0	D10K: D10K: Other PT Losses	9.29	-57.37	-57.37	82.48	82.48	-42.51	23.01
106	1	D10K: D10K: Other PT Losses	9.29	-54.09	-54.09	78.87	78.88	-39.96	22.34
106	2	D10K: D10K: Other PT Losses	9.29	-50.81	-50.81	75.27	75.28	-37.41	21.66
107	0	D10K: D10K: Other PT Losses	9.29	-50.81	-50.81	75.27	75.27	-37.42	21.66
107	1	D10K: D10K: Other PT Losses	9.29	-32.22	-32.22	54.87	54.87	-22.97	17.84
107	2	D10K: D10K: Other PT Losses	9.29	-13.64	-13.64	34.46	34.47	-8.53	14.01
108	0	D10K: D10K: Other PT Losses	9.29	-13.64	-13.64	34.46	34.47	-8.53	14.01
108	1	D10K: D10K: Other PT Losses	9.29	4.24	4.24	14.84	14.84	5.36	10.33
108	2	D10K: D10K: Other PT Losses	9.29	22.11	22.11	-4.79	-4.79	19.26	6.65
109	0	D10K: D10K: Other PT Losses	9.29	22.11	22.11	-4.79	-4.79	19.25	6.65
109	1	D10K: D10K: Other PT Losses	9.29	28.45	28.44	-11.74	-11.74	24.18	5.35
109	2	D10K: D10K: Other PT Losses	9.29	34.78	34.78	-18.69	-18.69	29.10	4.04
111	0	D10K: D10K: Other PT Losses	15.06	9.04	9.03	21.67	21.67	10.38	16.30
111	1	D10K: D10K: Other PT Losses	15.06	9.25	9.25	21.43	21.43	10.55	16.25
111	2	D10K: D10K: Other PT Losses	15.06	9.47	9.47	21.20	21.20	10.71	16.21
112	0	D10K: D10K: Other PT Losses	15.06	9.47	9.47	21.20	21.20	10.71	16.21
112	1	D10K: D10K: Other PT Losses	15.06	11.40	11.40	19.08	19.08	12.21	15.81
112	2	D10K: D10K: Other PT Losses	15.06	13.32	13.32	16.96	16.96	13.71	15.42
113	0	D10K: D10K: Other PT Losses	15.06	13.32	13.32	16.96	16.96	13.71	15.42
113	1	D10K: D10K: Other PT Losses	15.06	15.05	15.05	15.07	15.07	15.05	15.06
113	2	D10K: D10K: Other PT Losses	15.06	16.77	16.78	13.18	13.17	16.39	14.71
114	0	D10K: D10K: Other PT Losses	15.06	16.77	16.78	13.18	13.17	16.39	14.71
114	1	D10K: D10K: Other PT Losses	15.06	17.36	17.36	12.53	12.53	16.85	14.58
114	2	D10K: D10K: Other PT Losses	15.06	17.94	17.95	11.89	11.89	17.30	14.46
116	0	D10K: D10K: Other PT Losses	16.35	13.00	13.00	20.04	20.03	13.75	17.04
116	1	D10K: D10K: Other PT Losses	16.35	12.75	12.75	20.31	20.31	13.55	17.09
116	2	D10K: D10K: Other PT Losses	16.35	12.50	12.50	20.58	20.58	13.36	17.15

MEMBER STRESSES

DECK & CANOPY MEMBERS
D10K

(-) compression

			CREEP (CR)						
Member	Station	Result Case	(P/A) @ Centroid (kips/ft²)	Normal Stress @ Point 1 (kips/ft²)	Normal Stress @ Point 2 (kips/ft²)	Normal Stress @ Point 3 (kips/ft²)	Normal Stress @ Point 4 (kips/ft²)	Normal Stress @ Point 5 (kips/ft²)	Normal Stress @ Point 6 (kips/ft²)
117	0	D10K: D10K: Other PT Losses	16.35	12.50	12.50	20.58	20.58	13.36	17.15
117	1	D10K: D10K: Other PT Losses	16.35	11.32	11.33	21.88	21.87	12.45	17.39
117	2	D10K: D10K: Other PT Losses	16.35	10.15	10.15	23.17	23.16	11.53	17.63
118	0	D10K: D10K: Other PT Losses	16.35	10.15	10.15	23.17	23.16	11.53	17.63
118	1	D10K: D10K: Other PT Losses	16.35	8.86	8.87	24.58	24.57	10.53	17.89
118	2	D10K: D10K: Other PT Losses	16.35	7.58	7.59	25.99	25.98	9.54	18.16
119	0	D10K: D10K: Other PT Losses	16.35	7.58	7.59	25.99	25.98	9.54	18.16
119	1	D10K: D10K: Other PT Losses	16.35	7.38	7.39	26.21	26.20	9.38	18.20
119	2	D10K: D10K: Other PT Losses	16.35	7.18	7.19	26.43	26.42	9.23	18.24
121	0	D10K: D10K: Other PT Losses	5.97	8.73	8.74	2.94	2.93	8.12	5.40
121	1	D10K: D10K: Other PT Losses	5.97	8.40	8.41	3.30	3.29	7.87	5.47
121	2	D10K: D10K: Other PT Losses	5.97	8.07	8.08	3.66	3.66	7.61	5.54
122	0	D10K: D10K: Other PT Losses	5.97	8.07	8.08	3.66	3.66	7.61	5.54
122	1	D10K: D10K: Other PT Losses	5.97	5.63	5.65	6.34	6.33	5.71	6.04
122	2	D10K: D10K: Other PT Losses	5.97	3.20	3.21	9.02	9.01	3.82	6.54
123	0	D10K: D10K: Other PT Losses	5.97	3.20	3.21	9.02	9.01	3.82	6.54
123	1	D10K: D10K: Other PT Losses	5.97	0.76	0.77	11.70	11.68	1.93	7.04
123	2	D10K: D10K: Other PT Losses	5.97	-1.68	-1.66	14.37	14.36	0.03	7.55
124	0	D10K: D10K: Other PT Losses	5.97	-1.68	-1.66	14.37	14.36	0.03	7.55
124	1	D10K: D10K: Other PT Losses	5.97	-1.97	-1.95	14.69	14.67	-0.19	7.61
124	2	D10K: D10K: Other PT Losses	5.97	-2.26	-2.24	15.01	14.99	-0.42	7.66
126	0	D10K: D10K: Other PT Losses	-22.26	22.31	22.33	-71.20	-71.21	12.39	-31.44
126	1	D10K: D10K: Other PT Losses	-22.26	16.14	16.16	-64.42	-64.44	7.59	-30.17
126	2	D10K: D10K: Other PT Losses	-22.26	9.97	9.99	-57.65	-57.67	2.80	-28.90
127	0	D10K: D10K: Other PT Losses	-22.26	9.97	9.99	-57.65	-57.67	2.80	-28.90
127	1	D10K: D10K: Other PT Losses	-22.26	-12.71	-12.69	-32.74	-32.76	-14.83	-24.23
127	2	D10K: D10K: Other PT Losses	-22.26	-35.40	-35.37	-7.84	-7.86	-32.46	-19.56
128	0	D10K: D10K: Other PT Losses	-22.26	-35.40	-35.37	-7.84	-7.86	-32.46	-19.56
128	1	D10K: D10K: Other PT Losses	-22.26	-58.42	-58.39	17.44	17.41	-50.35	-14.82
133	0	D10K: D10K: Other PT Losses	-24.40	-81.82	-81.78	38.63	38.59	-69.01	-12.59
133	1	D10K: D10K: Other PT Losses	-24.40	-59.26	-59.22	13.86	13.83	-51.48	-17.23
133	2	D10K: D10K: Other PT Losses	-24.40	-36.70	-36.66	-10.91	-10.94	-33.94	-21.88
134	0	D10K: D10K: Other PT Losses	-24.40	-36.70	-36.66	-10.91	-10.94	-33.94	-21.88
134	1	D10K: D10K: Other PT Losses	-24.40	-14.31	-14.28	-35.48	-35.51	-16.55	-26.48
134	2	D10K: D10K: Other PT Losses	-24.40	8.07	8.09	-60.06	-60.08	0.84	-31.09
135	0	D10K: D10K: Other PT Losses	-24.40	8.07	8.09	-60.06	-60.08	0.84	-31.09
135	1	D10K: D10K: Other PT Losses	-24.40	14.03	14.05	-66.60	-66.62	5.47	-32.32
135	2	D10K: D10K: Other PT Losses	-24.40	19.99	20.01	-73.15	-73.17	10.11	-33.55
137	0	D10K: D10K: Other PT Losses	3.22	1.59	1.61	5.01	4.98	1.96	3.55
137	1	D10K: D10K: Other PT Losses	3.22	2.91	2.94	3.55	3.53	2.99	3.28
137	2	D10K: D10K: Other PT Losses	3.22	4.23	4.26	2.10	2.08	4.02	3.01
138	0	D10K: D10K: Other PT Losses	3.22	4.23	4.26	2.10	2.08	4.02	3.01
138	1	D10K: D10K: Other PT Losses	3.22	8.16	8.18	-2.21	-2.23	7.07	2.20
138	2	D10K: D10K: Other PT Losses	3.22	12.08	12.11	-6.52	-6.54	10.12	1.39
139	0	D10K: D10K: Other PT Losses	3.22	12.08	12.11	-6.52	-6.54	10.12	1.39
139	1	D10K: D10K: Other PT Losses	3.22	16.31	16.33	-11.16	-11.17	13.40	0.52
139	2	D10K: D10K: Other PT Losses	3.22	20.53	20.55	-15.79	-15.81	16.68	-0.35

MEMBER STRESSES

DECK & CANOPY MEMBERS
D10K

(-) compression

			CREEP (CR)						
Member	Station	Result Case	(P/A) @ Centroid (kips/ft²)	Normal Stress @ Point 1 (kips/ft²)	Normal Stress @ Point 2 (kips/ft²)	Normal Stress @ Point 3 (kips/ft²)	Normal Stress @ Point 4 (kips/ft²)	Normal Stress @ Point 5 (kips/ft²)	Normal Stress @ Point 6 (kips/ft²)
140	0	D10K: D10K: Other PT Losses	3.22	20.53	20.55	-15.79	-15.81	16.68	-0.35
140	1	D10K: D10K: Other PT Losses	3.22	21.63	21.65	-17.00	-17.01	17.53	-0.57
140	2	D10K: D10K: Other PT Losses	3.22	22.73	22.74	-18.20	-18.22	18.39	-0.80
142	0	D10K: D10K: Other PT Losses	8.76	17.80	17.82	-1.17	-1.19	15.80	6.90
142	1	D10K: D10K: Other PT Losses	8.76	17.61	17.63	-0.96	-0.97	15.64	6.94
142	2	D10K: D10K: Other PT Losses	8.76	17.41	17.43	-0.74	-0.76	15.49	6.98
143	0	D10K: D10K: Other PT Losses	8.76	17.41	17.43	-0.74	-0.76	15.49	6.98
143	1	D10K: D10K: Other PT Losses	8.76	16.94	16.96	-0.22	-0.24	15.12	7.07
143	2	D10K: D10K: Other PT Losses	8.76	16.47	16.48	0.30	0.28	14.76	7.17
144	0	D10K: D10K: Other PT Losses	8.76	16.47	16.48	0.30	0.28	14.76	7.17
144	1	D10K: D10K: Other PT Losses	8.76	16.05	16.07	0.75	0.74	14.43	7.26
144	2	D10K: D10K: Other PT Losses	8.76	15.63	15.65	1.21	1.20	14.11	7.34
145	0	D10K: D10K: Other PT Losses	8.76	15.63	15.65	1.21	1.20	14.11	7.34
145	1	D10K: D10K: Other PT Losses	8.76	15.43	15.44	1.43	1.42	13.95	7.39
145	2	D10K: D10K: Other PT Losses	8.76	15.23	15.24	1.66	1.65	13.79	7.43
147	0	D10K: D10K: Other PT Losses	8.58	28.91	28.92	-13.73	-13.74	24.38	4.40
147	1	D10K: D10K: Other PT Losses	8.58	26.20	26.21	-10.76	-10.77	22.28	4.96
147	2	D10K: D10K: Other PT Losses	8.58	23.49	23.50	-7.79	-7.80	20.17	5.51
148	0	D10K: D10K: Other PT Losses	8.58	23.49	23.50	-7.79	-7.80	20.17	5.51
148	1	D10K: D10K: Other PT Losses	8.58	18.57	18.58	-2.39	-2.40	16.35	6.53
148	2	D10K: D10K: Other PT Losses	8.58	13.66	13.67	3.01	3.00	12.53	7.54
149	0	D10K: D10K: Other PT Losses	8.58	13.66	13.67	3.01	3.00	12.53	7.54
149	1	D10K: D10K: Other PT Losses	8.58	8.42	8.42	8.77	8.76	8.46	8.62
149	2	D10K: D10K: Other PT Losses	8.58	3.17	3.18	14.52	14.51	4.38	9.70
150	0	D10K: D10K: Other PT Losses	8.58	3.17	3.18	14.52	14.51	4.38	9.69
150	1	D10K: D10K: Other PT Losses	8.58	1.57	1.58	16.28	16.27	3.14	10.03
150	2	D10K: D10K: Other PT Losses	8.58	-0.03	-0.03	18.04	18.04	1.89	10.36
152	0	D10K: D10K: Other PT Losses	5.16	25.43	25.44	-17.11	-17.11	20.92	0.98
152	1	D10K: D10K: Other PT Losses	5.16	20.52	20.52	-11.71	-11.71	17.10	1.99
152	2	D10K: D10K: Other PT Losses	5.16	15.60	15.60	-6.31	-6.31	13.27	3.01
153	0	D10K: D10K: Other PT Losses	5.16	15.60	15.60	-6.31	-6.31	13.27	3.01
153	1	D10K: D10K: Other PT Losses	5.16	7.57	7.58	2.50	2.50	7.03	4.66
153	2	D10K: D10K: Other PT Losses	5.16	-0.46	-0.45	11.32	11.31	0.79	6.31
154	0	D10K: D10K: Other PT Losses	5.16	-0.46	-0.45	11.32	11.32	0.80	6.31
154	1	D10K: D10K: Other PT Losses	5.16	-9.19	-9.18	20.90	20.90	-5.99	8.11
154	2	D10K: D10K: Other PT Losses	5.16	-17.92	-17.91	30.49	30.48	-12.77	9.91
155	0	D10K: D10K: Other PT Losses	5.15	-17.92	-17.91	30.48	30.48	-12.77	9.90
155	1	D10K: D10K: Other PT Losses	5.15	-20.63	-20.63	33.47	33.46	-14.89	10.46
155	2	D10K: D10K: Other PT Losses	5.15	-23.35	-23.35	36.45	36.45	-17.00	11.02
157	0	D10K: D10K: Other PT Losses	0.05	-10.12	-10.12	11.22	11.22	-7.85	2.14
157	1	D10K: D10K: Other PT Losses	0.05	-9.41	-9.41	10.44	10.44	-7.30	2.00
157	2	D10K: D10K: Other PT Losses	0.05	-8.71	-8.71	9.67	9.67	-6.75	1.85
158	0	D10K: D10K: Other PT Losses	0.05	-8.71	-8.71	9.67	9.67	-6.75	1.85
158	1	D10K: D10K: Other PT Losses	0.05	-6.45	-6.45	7.18	7.18	-5.00	1.39
158	2	D10K: D10K: Other PT Losses	0.05	-4.19	-4.18	4.70	4.70	-3.24	0.92
159	0	D10K: D10K: Other PT Losses	0.05	-4.19	-4.18	4.70	4.70	-3.24	0.92
159	1	D10K: D10K: Other PT Losses	0.05	-1.89	-1.89	2.19	2.18	-1.46	0.45
159	2	D10K: D10K: Other PT Losses	0.05	0.40	0.40	-0.33	-0.33	0.32	-0.02

MEMBER STRESSES

DECK & CANOPY MEMBERS
D10K

(-) compression

			SHRINKAGE (SH)						
Member	Station	Result Case	(P/A) @ Centroid (kips/ft²)	Normal Stress @ Point 1 (kips/ft²)	Normal Stress @ Point 2 (kips/ft²)	Normal Stress @ Point 3 (kips/ft²)	Normal Stress @ Point 4 (kips/ft²)	Normal Stress @ Point 5 (kips/ft²)	Normal Stress @ Point 6 (kips/ft²)
1	0	D10K: D10K: Other PT Losses	0.30	11.95	11.95	2.00	2.00	8.41	-17.22
1	1	D10K: D10K: Other PT Losses	0.30	11.98	11.98	2.00	2.01	8.43	-17.26
1	2	D10K: D10K: Other PT Losses	0.30	12.00	12.00	2.01	2.01	8.45	-17.30
2	0	D10K: D10K: Other PT Losses	0.65	7.59	7.59	1.66	1.66	5.48	-9.79
2	1	D10K: D10K: Other PT Losses	0.65	3.87	3.87	1.12	1.12	2.89	-4.20
2	2	D10K: D10K: Other PT Losses	0.65	0.16	0.15	0.57	0.57	0.30	1.38
3	0	D10K: D10K: Other PT Losses	6.11	7.11	7.10	6.26	6.26	6.80	4.62
3	1	D10K: D10K: Other PT Losses	6.11	6.41	6.41	6.15	6.16	6.32	5.66
3	2	D10K: D10K: Other PT Losses	6.11	5.72	5.71	6.05	6.05	5.84	6.71
4	0	D10K: D10K: Other PT Losses	6.11	5.72	5.71	6.05	6.05	5.84	6.71
4	1	D10K: D10K: Other PT Losses	6.11	4.23	4.23	5.84	5.84	4.80	8.94
4	2	D10K: D10K: Other PT Losses	6.11	2.74	2.74	5.62	5.62	3.77	11.17
5	0	D10K: D10K: Other PT Losses	6.11	2.74	2.74	5.62	5.62	3.77	11.17
5	1	D10K: D10K: Other PT Losses	6.11	1.26	1.26	5.40	5.40	2.73	13.40
5	2	D10K: D10K: Other PT Losses	6.11	-0.23	-0.22	5.19	5.18	1.70	15.63
6	0	D10K: D10K: Other PT Losses	6.11	-0.23	-0.22	5.19	5.18	1.70	15.63
6	1	D10K: D10K: Other PT Losses	6.11	-0.42	-0.42	5.16	5.15	1.56	15.93
6	2	D10K: D10K: Other PT Losses	6.11	-0.62	-0.62	5.13	5.12	1.43	16.23
7	0	D10K: D10K: Other PT Losses	6.02	3.02	3.02	5.58	5.58	3.93	10.52
7	1	D10K: D10K: Other PT Losses	6.02	2.12	2.13	5.45	5.44	3.31	11.86
7	2	D10K: D10K: Other PT Losses	6.02	1.23	1.23	5.32	5.31	2.68	13.21
8	0	D10K: D10K: Other PT Losses	7.57	3.35	3.36	6.96	6.95	4.64	13.91
8	1	D10K: D10K: Other PT Losses	7.57	3.27	3.28	6.94	6.94	4.58	14.03
8	2	D10K: D10K: Other PT Losses	7.57	3.19	3.20	6.93	6.93	4.52	14.15
9	0	D10K: D10K: Other PT Losses	7.57	3.19	3.20	6.93	6.93	4.52	14.15
9	1	D10K: D10K: Other PT Losses	7.57	2.98	2.99	6.90	6.90	4.38	14.46
9	2	D10K: D10K: Other PT Losses	7.57	2.77	2.78	6.87	6.87	4.24	14.77
10	0	D10K: D10K: Other PT Losses	7.57	2.77	2.78	6.87	6.87	4.24	14.77
10	1	D10K: D10K: Other PT Losses	7.57	2.57	2.58	6.85	6.83	4.09	15.08
10	2	D10K: D10K: Other PT Losses	7.57	2.36	2.37	6.82	6.80	3.95	15.39
11	0	D10K: D10K: Other PT Losses	7.57	2.36	2.37	6.82	6.80	3.95	15.39
11	1	D10K: D10K: Other PT Losses	7.57	2.33	2.35	6.81	6.80	3.93	15.43
11	2	D10K: D10K: Other PT Losses	7.57	2.31	2.32	6.81	6.79	3.91	15.48
12	0	D10K: D10K: Other PT Losses	7.61	3.02	3.03	6.95	6.94	4.42	14.51
12	1	D10K: D10K: Other PT Losses	7.61	3.59	3.60	7.03	7.02	4.82	13.65
12	2	D10K: D10K: Other PT Losses	7.61	4.16	4.17	7.12	7.10	5.21	12.80
13	0	D10K: D10K: Other PT Losses	6.77	3.53	3.55	6.31	6.29	4.52	11.63
13	1	D10K: D10K: Other PT Losses	6.77	3.60	3.61	6.32	6.30	4.57	11.53
13	2	D10K: D10K: Other PT Losses	6.77	3.66	3.68	6.32	6.31	4.61	11.44
14	0	D10K: D10K: Other PT Losses	6.77	3.66	3.68	6.32	6.31	4.61	11.44
14	1	D10K: D10K: Other PT Losses	6.77	3.86	3.88	6.36	6.34	4.75	11.13
14	2	D10K: D10K: Other PT Losses	6.77	4.06	4.08	6.39	6.37	4.89	10.83
15	0	D10K: D10K: Other PT Losses	6.77	4.06	4.08	6.39	6.37	4.89	10.83
15	1	D10K: D10K: Other PT Losses	6.77	4.26	4.28	6.42	6.40	5.03	10.53
15	2	D10K: D10K: Other PT Losses	6.77	4.46	4.48	6.45	6.42	5.17	10.23
16	0	D10K: D10K: Other PT Losses	6.77	4.46	4.48	6.45	6.42	5.17	10.23
16	1	D10K: D10K: Other PT Losses	6.77	4.49	4.51	6.45	6.43	5.19	10.19
16	2	D10K: D10K: Other PT Losses	6.77	4.51	4.53	6.45	6.43	5.20	10.16

MEMBER STRESSES

DECK & CANOPY MEMBERS
D10K

(-) compression

			SHRINKAGE (SH)						
Member	Station	Result Case	(P/A) @ Centroid (kips/ft²)	Normal Stress @ Point 1 (kips/ft²)	Normal Stress @ Point 2 (kips/ft²)	Normal Stress @ Point 3 (kips/ft²)	Normal Stress @ Point 4 (kips/ft²)	Normal Stress @ Point 5 (kips/ft²)	Normal Stress @ Point 6 (kips/ft²)
17	0	D10K: D10K: Other PT Losses	6.22	3.21	3.23	5.79	5.77	4.13	10.74
17	1	D10K: D10K: Other PT Losses	6.22	4.86	4.88	6.03	6.01	5.28	8.26
17	2	D10K: D10K: Other PT Losses	6.22	6.51	6.53	6.28	6.25	6.43	5.77
18	0	D10K: D10K: Other PT Losses	4.25	4.15	4.17	4.24	4.22	4.18	4.38
18	1	D10K: D10K: Other PT Losses	4.25	4.00	4.02	4.22	4.20	4.08	4.61
18	2	D10K: D10K: Other PT Losses	4.25	3.85	3.87	4.20	4.18	3.98	4.83
19	0	D10K: D10K: Other PT Losses	4.25	3.85	3.87	4.20	4.18	3.98	4.83
19	1	D10K: D10K: Other PT Losses	4.25	3.21	3.23	4.11	4.08	3.53	5.79
19	2	D10K: D10K: Other PT Losses	4.25	2.57	2.60	4.02	3.99	3.09	6.75
20	0	D10K: D10K: Other PT Losses	4.25	2.57	2.60	4.02	3.99	3.09	6.75
20	1	D10K: D10K: Other PT Losses	4.25	1.93	1.96	3.92	3.90	2.64	7.71
20	2	D10K: D10K: Other PT Losses	4.25	1.29	1.32	3.83	3.80	2.20	8.66
21	0	D10K: D10K: Other PT Losses	4.25	1.29	1.32	3.83	3.80	2.20	8.66
21	1	D10K: D10K: Other PT Losses	4.25	1.18	1.21	3.82	3.78	2.12	8.83
21	2	D10K: D10K: Other PT Losses	4.25	1.07	1.10	3.80	3.77	2.04	9.00
22	0	D10K: D10K: Other PT Losses	2.42	-1.28	-1.25	1.90	1.87	-0.15	7.96
22	1	D10K: D10K: Other PT Losses	2.42	0.95	0.98	2.22	2.19	1.41	4.60
22	2	D10K: D10K: Other PT Losses	2.42	3.19	3.22	2.55	2.52	2.97	1.24
23	0	D10K: D10K: Other PT Losses	0.82	-0.69	-0.66	0.62	0.58	-0.22	3.06
23	1	D10K: D10K: Other PT Losses	0.82	-0.44	-0.41	0.65	0.62	-0.05	2.69
23	2	D10K: D10K: Other PT Losses	0.82	-0.19	-0.16	0.69	0.66	0.13	2.31
24	0	D10K: D10K: Other PT Losses	0.82	-0.19	-0.16	0.69	0.66	0.13	2.31
24	1	D10K: D10K: Other PT Losses	0.82	1.48	1.52	0.93	0.90	1.29	-0.21
24	2	D10K: D10K: Other PT Losses	0.82	3.16	3.20	1.18	1.15	2.46	-2.73
25	0	D10K: D10K: Other PT Losses	0.82	3.16	3.20	1.18	1.15	2.46	-2.73
25	1	D10K: D10K: Other PT Losses	0.82	4.84	4.87	1.43	1.39	3.63	-5.25
25	2	D10K: D10K: Other PT Losses	0.82	6.51	6.55	1.67	1.63	4.79	-7.77
26	0	D10K: D10K: Other PT Losses	0.82	6.51	6.55	1.67	1.63	4.79	-7.77
26	1	D10K: D10K: Other PT Losses	0.82	6.94	6.98	1.74	1.70	5.09	-8.42
26	2	D10K: D10K: Other PT Losses	0.82	7.37	7.41	1.80	1.76	5.39	-9.06
29	0	D10K: D10K: Other PT Losses	2.61	13.63	13.81	4.32	4.14	10.34	-14.10
29	1	D10K: D10K: Other PT Losses	2.61	12.66	12.84	4.18	4.00	9.67	-12.65
29	2	D10K: D10K: Other PT Losses	2.61	11.70	11.87	4.04	3.86	9.00	-11.19
30	0	D10K: D10K: Other PT Losses	2.61	11.70	11.87	4.04	3.86	9.00	-11.19
30	1	D10K: D10K: Other PT Losses	2.61	7.96	8.12	3.48	3.32	6.39	-5.55
30	2	D10K: D10K: Other PT Losses	2.61	4.21	4.36	2.93	2.78	3.78	0.08
31	0	D10K: D10K: Other PT Losses	2.61	4.21	4.36	2.93	2.78	3.78	0.08
31	1	D10K: D10K: Other PT Losses	2.61	0.47	0.60	2.37	2.24	1.17	5.72
31	2	D10K: D10K: Other PT Losses	2.61	-3.27	-3.15	1.81	1.70	-1.44	11.36
32	0	D10K: D10K: Other PT Losses	2.61	-3.27	-3.15	1.81	1.70	-1.44	11.36
32	1	D10K: D10K: Other PT Losses	2.61	-3.82	-3.71	1.73	1.62	-1.83	12.18
32	2	D10K: D10K: Other PT Losses	2.61	-4.37	-4.26	1.65	1.54	-2.21	13.01
33	0	D10K: D10K: Other PT Losses	4.89	0.75	0.86	4.35	4.24	2.05	11.02
33	1	D10K: D10K: Other PT Losses	4.89	-0.74	-0.63	4.13	4.02	1.01	13.27
33	2	D10K: D10K: Other PT Losses	4.89	-2.23	-2.12	3.91	3.80	-0.03	15.51
34	0	D10K: D10K: Other PT Losses	4.95	1.51	1.62	4.51	4.40	2.60	10.04
34	1	D10K: D10K: Other PT Losses	4.95	1.43	1.54	4.50	4.39	2.54	10.17
34	2	D10K: D10K: Other PT Losses	4.95	1.34	1.45	4.49	4.38	2.48	10.29

MEMBER STRESSES

DECK & CANOPY MEMBERS
D10K

(-) compression

			SHRINKAGE (SH)						
Member	Station	Result Case	(P/A) @ Centroid (kips/ft²)	Normal Stress @ Point 1 (kips/ft²)	Normal Stress @ Point 2 (kips/ft²)	Normal Stress @ Point 3 (kips/ft²)	Normal Stress @ Point 4 (kips/ft²)	Normal Stress @ Point 5 (kips/ft²)	Normal Stress @ Point 6 (kips/ft²)
35	0	D10K: D10K: Other PT Losses	4.95	1.34	1.45	4.49	4.38	2.48	10.29
35	1	D10K: D10K: Other PT Losses	4.95	1.09	1.19	4.45	4.34	2.30	10.68
35	2	D10K: D10K: Other PT Losses	4.95	0.83	0.93	4.41	4.31	2.12	11.07
36	0	D10K: D10K: Other PT Losses	4.95	0.83	0.93	4.41	4.31	2.12	11.07
36	1	D10K: D10K: Other PT Losses	4.95	0.58	0.67	4.37	4.27	1.94	11.46
36	2	D10K: D10K: Other PT Losses	4.95	0.32	0.41	4.33	4.24	1.76	11.85
37	0	D10K: D10K: Other PT Losses	4.95	0.32	0.41	4.33	4.24	1.76	11.85
37	1	D10K: D10K: Other PT Losses	4.95	0.19	0.27	4.31	4.22	1.67	12.05
37	2	D10K: D10K: Other PT Losses	4.95	0.06	0.14	4.28	4.20	1.57	12.25
38	0	D10K: D10K: Other PT Losses	6.99	3.40	3.48	6.51	6.43	4.52	12.32
38	1	D10K: D10K: Other PT Losses	6.99	2.32	2.40	6.35	6.27	3.76	13.94
38	2	D10K: D10K: Other PT Losses	6.99	1.24	1.32	6.19	6.11	3.01	15.57
39	0	D10K: D10K: Other PT Losses	6.69	3.41	3.49	6.26	6.18	4.44	11.57
39	1	D10K: D10K: Other PT Losses	6.69	3.05	3.14	6.21	6.13	4.19	12.10
39	2	D10K: D10K: Other PT Losses	6.69	2.70	2.78	6.16	6.08	3.94	12.63
40	0	D10K: D10K: Other PT Losses	6.69	2.70	2.78	6.16	6.08	3.94	12.63
40	1	D10K: D10K: Other PT Losses	6.69	1.65	1.72	6.00	5.92	3.21	14.22
40	2	D10K: D10K: Other PT Losses	6.69	0.59	0.66	5.84	5.77	2.47	15.81
41	0	D10K: D10K: Other PT Losses	6.69	0.59	0.66	5.84	5.77	2.47	15.81
41	1	D10K: D10K: Other PT Losses	6.69	-0.46	-0.40	5.69	5.62	1.74	17.40
41	2	D10K: D10K: Other PT Losses	6.69	-1.52	-1.46	5.53	5.47	1.00	18.99
42	0	D10K: D10K: Other PT Losses	6.69	-1.52	-1.46	5.53	5.47	1.00	18.99
42	1	D10K: D10K: Other PT Losses	6.69	-2.17	-2.11	5.43	5.37	0.54	19.98
42	2	D10K: D10K: Other PT Losses	6.69	-2.83	-2.77	5.33	5.28	0.09	20.96
43	0	D10K: D10K: Other PT Losses	7.45	-1.70	-1.64	6.14	6.09	1.10	21.16
43	1	D10K: D10K: Other PT Losses	7.45	-2.12	-2.06	6.08	6.03	0.81	21.78
43	2	D10K: D10K: Other PT Losses	7.45	-2.53	-2.48	6.02	5.97	0.52	22.41
44	0	D10K: D10K: Other PT Losses	7.22	-2.98	-2.93	5.76	5.70	0.14	22.51
44	1	D10K: D10K: Other PT Losses	7.22	-3.34	-3.29	5.71	5.65	-0.11	23.06
44	2	D10K: D10K: Other PT Losses	7.22	-3.70	-3.65	5.65	5.60	-0.36	23.60
45	0	D10K: D10K: Other PT Losses	7.22	-3.70	-3.65	5.65	5.60	-0.36	23.60
45	1	D10K: D10K: Other PT Losses	7.22	-4.71	-4.66	5.50	5.45	-1.07	25.12
45	2	D10K: D10K: Other PT Losses	7.22	-5.72	-5.68	5.35	5.31	-1.77	26.64
46	0	D10K: D10K: Other PT Losses	7.22	-5.72	-5.68	5.35	5.31	-1.77	26.64
46	1	D10K: D10K: Other PT Losses	7.22	-6.73	-6.69	5.20	5.16	-2.48	28.16
46	2	D10K: D10K: Other PT Losses	7.22	-7.74	-7.70	5.05	5.02	-3.18	29.68
47	0	D10K: D10K: Other PT Losses	7.22	-7.74	-7.70	5.05	5.02	-3.18	29.68
47	1	D10K: D10K: Other PT Losses	7.22	-8.46	-8.42	4.95	4.91	-3.68	30.76
47	2	D10K: D10K: Other PT Losses	7.22	-9.17	-9.14	4.84	4.81	-4.18	31.84
48	0	D10K: D10K: Other PT Losses	5.69	-12.52	-12.49	3.04	3.01	-6.98	33.04
48	1	D10K: D10K: Other PT Losses	5.69	-11.94	-11.91	3.13	3.10	-6.57	32.16
48	2	D10K: D10K: Other PT Losses	5.69	-11.36	-11.33	3.21	3.18	-6.17	31.29
49	0	D10K: D10K: Other PT Losses	5.85	-16.17	-16.14	2.64	2.61	-9.47	38.93
49	1	D10K: D10K: Other PT Losses	5.85	-15.33	-15.31	2.77	2.74	-8.89	37.67
49	2	D10K: D10K: Other PT Losses	5.85	-14.50	-14.47	2.89	2.86	-8.30	36.41
50	0	D10K: D10K: Other PT Losses	5.85	-14.50	-14.47	2.89	2.86	-8.30	36.41
50	1	D10K: D10K: Other PT Losses	5.85	-12.28	-12.26	3.21	3.19	-6.76	33.08
50	2	D10K: D10K: Other PT Losses	5.85	-10.06	-10.04	3.53	3.51	-5.22	29.75

MEMBER STRESSES

DECK & CANOPY MEMBERS
D10K

(-) compression

			SHRINKAGE (SH)						
Member	Station	Result Case	(P/A) @ Centroid (kips/ft²)	Normal Stress @ Point 1 (kips/ft²)	Normal Stress @ Point 2 (kips/ft²)	Normal Stress @ Point 3 (kips/ft²)	Normal Stress @ Point 4 (kips/ft²)	Normal Stress @ Point 5 (kips/ft²)	Normal Stress @ Point 6 (kips/ft²)
51	0	D10K: D10K: Other PT Losses	5.85	-10.06	-10.04	3.53	3.51	-5.22	29.75
51	1	D10K: D10K: Other PT Losses	5.85	-7.85	-7.83	3.85	3.84	-3.68	26.42
51	2	D10K: D10K: Other PT Losses	5.85	-5.63	-5.62	4.18	4.16	-2.14	23.09
52	0	D10K: D10K: Other PT Losses	5.85	-5.63	-5.62	4.18	4.16	-2.14	23.09
52	1	D10K: D10K: Other PT Losses	5.85	-3.87	-3.86	4.43	4.42	-0.91	20.45
52	2	D10K: D10K: Other PT Losses	5.85	-2.11	-2.11	4.69	4.68	0.31	17.81
60	0	D10K: D10K: Other PT Losses	0.00	0.00	0.00	0.00	0.00	0.00	0.00
60	1	D10K: D10K: Other PT Losses	0.00	0.00	0.00	0.00	0.00	0.00	0.00
60	2	D10K: D10K: Other PT Losses	0.00	0.00	0.00	0.00	0.00	0.00	0.00
101	0	D10K: D10K: Other PT Losses	-0.82	20.33	20.33	-24.04	-24.04	15.61	-5.18
101	1	D10K: D10K: Other PT Losses	-0.82	19.00	19.00	-22.59	-22.59	14.59	-4.90
101	2	D10K: D10K: Other PT Losses	-0.82	17.68	17.68	-21.14	-21.14	13.56	-4.63
102	0	D10K: D10K: Other PT Losses	-0.82	17.68	17.68	-21.14	-21.14	13.56	-4.63
102	1	D10K: D10K: Other PT Losses	-0.82	9.78	9.78	-12.46	-12.46	7.41	-3.01
102	2	D10K: D10K: Other PT Losses	-0.82	1.87	1.87	-3.78	-3.78	1.27	-1.38
103	0	D10K: D10K: Other PT Losses	-0.82	1.87	1.87	-3.78	-3.78	1.27	-1.38
103	1	D10K: D10K: Other PT Losses	-0.82	-5.93	-5.93	4.78	4.78	-4.79	0.23
103	2	D10K: D10K: Other PT Losses	-0.82	-13.73	-13.73	13.35	13.34	-10.85	1.83
104	0	D10K: D10K: Other PT Losses	-0.82	-13.73	-13.73	13.35	13.34	-10.85	1.83
104	1	D10K: D10K: Other PT Losses	-0.82	-15.89	-15.89	15.72	15.72	-12.53	2.28
104	2	D10K: D10K: Other PT Losses	-0.82	-18.06	-18.05	18.10	18.09	-14.22	2.72
106	0	D10K: D10K: Other PT Losses	-4.78	-1.59	-1.59	-8.28	-8.28	-2.30	-5.43
106	1	D10K: D10K: Other PT Losses	-4.78	-2.07	-2.06	-7.76	-7.76	-2.67	-5.34
106	2	D10K: D10K: Other PT Losses	-4.78	-2.54	-2.54	-7.23	-7.24	-3.04	-5.24
107	0	D10K: D10K: Other PT Losses	-4.78	-2.54	-2.54	-7.23	-7.24	-3.04	-5.24
107	1	D10K: D10K: Other PT Losses	-4.78	-5.37	-5.37	-4.13	-4.13	-5.24	-4.66
107	2	D10K: D10K: Other PT Losses	-4.78	-8.20	-8.20	-1.02	-1.03	-7.44	-4.07
108	0	D10K: D10K: Other PT Losses	-4.78	-8.20	-8.20	-1.02	-1.03	-7.44	-4.07
108	1	D10K: D10K: Other PT Losses	-4.78	-10.88	-10.88	1.93	1.92	-9.52	-3.52
108	2	D10K: D10K: Other PT Losses	-4.78	-13.57	-13.56	4.87	4.87	-11.61	-2.97
109	0	D10K: D10K: Other PT Losses	-4.78	-13.57	-13.56	4.87	4.87	-11.61	-2.97
109	1	D10K: D10K: Other PT Losses	-4.78	-14.54	-14.54	5.94	5.94	-12.36	-2.77
109	2	D10K: D10K: Other PT Losses	-4.78	-15.52	-15.51	7.01	7.01	-13.12	-2.57
111	0	D10K: D10K: Other PT Losses	-1.76	-10.99	-10.98	8.38	8.37	-8.93	0.14
111	1	D10K: D10K: Other PT Losses	-1.76	-10.57	-10.56	7.92	7.91	-8.60	0.06
111	2	D10K: D10K: Other PT Losses	-1.76	-10.15	-10.14	7.46	7.45	-8.27	-0.03
112	0	D10K: D10K: Other PT Losses	-1.76	-10.15	-10.14	7.46	7.45	-8.27	-0.03
112	1	D10K: D10K: Other PT Losses	-1.76	-7.61	-7.60	4.67	4.66	-6.30	-0.55
112	2	D10K: D10K: Other PT Losses	-1.76	-5.06	-5.06	1.88	1.87	-4.32	-1.07
113	0	D10K: D10K: Other PT Losses	-1.76	-5.06	-5.06	1.88	1.87	-4.32	-1.07
113	1	D10K: D10K: Other PT Losses	-1.76	-2.58	-2.57	-0.85	-0.86	-2.39	-1.59
113	2	D10K: D10K: Other PT Losses	-1.76	-0.09	-0.09	-3.58	-3.59	-0.46	-2.10
114	0	D10K: D10K: Other PT Losses	-1.76	-0.09	-0.09	-3.58	-3.59	-0.46	-2.10
114	1	D10K: D10K: Other PT Losses	-1.76	0.61	0.62	-4.35	-4.36	0.09	-2.24
114	2	D10K: D10K: Other PT Losses	-1.76	1.32	1.33	-5.13	-5.14	0.64	-2.39
116	0	D10K: D10K: Other PT Losses	6.72	-2.77	-2.77	17.13	17.13	-0.66	8.67
116	1	D10K: D10K: Other PT Losses	6.72	-2.29	-2.28	16.60	16.59	-0.28	8.57
116	2	D10K: D10K: Other PT Losses	6.72	-1.80	-1.79	16.06	16.05	0.10	8.47

MEMBER STRESSES

DECK & CANOPY MEMBERS
D10K

(-) compression

			SHRINKAGE (SH)						
Member	Station	Result Case	(P/A) @ Centroid (kips/ft²)	Normal Stress @ Point 1 (kips/ft²)	Normal Stress @ Point 2 (kips/ft²)	Normal Stress @ Point 3 (kips/ft²)	Normal Stress @ Point 4 (kips/ft²)	Normal Stress @ Point 5 (kips/ft²)	Normal Stress @ Point 6 (kips/ft²)
117	0	D10K: D10K: Other PT Losses	6.72	-1.80	-1.79	16.06	16.05	0.10	8.47
117	1	D10K: D10K: Other PT Losses	6.72	2.01	2.02	11.88	11.88	3.06	7.68
117	2	D10K: D10K: Other PT Losses	6.72	5.81	5.82	7.71	7.70	6.02	6.90
118	0	D10K: D10K: Other PT Losses	6.72	5.81	5.82	7.71	7.70	6.02	6.90
118	1	D10K: D10K: Other PT Losses	6.72	9.47	9.48	3.69	3.68	8.86	6.15
118	2	D10K: D10K: Other PT Losses	6.72	13.14	13.15	-0.33	-0.35	11.71	5.39
119	0	D10K: D10K: Other PT Losses	6.72	13.14	13.15	-0.33	-0.35	11.71	5.39
119	1	D10K: D10K: Other PT Losses	6.72	13.94	13.95	-1.22	-1.23	12.33	5.23
119	2	D10K: D10K: Other PT Losses	6.72	14.74	14.76	-2.10	-2.11	12.96	5.06
121	0	D10K: D10K: Other PT Losses	19.12	12.13	12.14	26.79	26.78	13.69	20.56
121	1	D10K: D10K: Other PT Losses	19.12	12.47	12.49	26.41	26.40	13.96	20.48
121	2	D10K: D10K: Other PT Losses	19.12	12.82	12.83	26.03	26.02	14.23	20.41
122	0	D10K: D10K: Other PT Losses	19.12	12.82	12.83	26.03	26.02	14.23	20.41
122	1	D10K: D10K: Other PT Losses	19.12	14.89	14.90	23.76	23.75	15.84	19.99
122	2	D10K: D10K: Other PT Losses	19.12	16.96	16.97	21.49	21.48	17.44	19.56
123	0	D10K: D10K: Other PT Losses	19.12	16.96	16.97	21.49	21.48	17.44	19.56
123	1	D10K: D10K: Other PT Losses	19.12	19.03	19.04	19.22	19.20	19.05	19.14
123	2	D10K: D10K: Other PT Losses	19.12	21.10	21.11	16.94	16.93	20.66	18.71
124	0	D10K: D10K: Other PT Losses	19.12	21.10	21.11	16.94	16.93	20.66	18.71
124	1	D10K: D10K: Other PT Losses	19.12	21.40	21.41	16.61	16.60	20.90	18.65
124	2	D10K: D10K: Other PT Losses	19.12	21.70	21.72	16.28	16.27	21.13	18.58
126	0	D10K: D10K: Other PT Losses	29.99	8.89	8.91	53.15	53.13	13.60	34.33
126	1	D10K: D10K: Other PT Losses	29.99	11.61	11.63	50.16	50.15	15.71	33.77
126	2	D10K: D10K: Other PT Losses	29.99	14.33	14.35	47.17	47.16	17.83	33.21
127	0	D10K: D10K: Other PT Losses	29.99	14.33	14.35	47.17	47.16	17.83	33.21
127	1	D10K: D10K: Other PT Losses	29.99	23.96	23.97	36.61	36.59	25.31	31.23
127	2	D10K: D10K: Other PT Losses	29.99	33.58	33.60	26.04	26.02	32.79	29.25
128	0	D10K: D10K: Other PT Losses	29.99	33.58	33.60	26.04	26.02	32.79	29.25
128	1	D10K: D10K: Other PT Losses	29.99	43.43	43.45	15.23	15.21	40.44	27.22
133	0	D10K: D10K: Other PT Losses	29.35	60.10	60.14	-4.40	-4.44	53.26	23.02
133	1	D10K: D10K: Other PT Losses	29.35	46.91	46.95	10.08	10.04	43.01	25.74
133	2	D10K: D10K: Other PT Losses	29.35	33.72	33.76	24.55	24.52	32.76	28.45
134	0	D10K: D10K: Other PT Losses	29.35	33.72	33.76	24.55	24.52	32.76	28.45
134	1	D10K: D10K: Other PT Losses	29.35	20.57	20.61	38.99	38.96	22.54	31.16
134	2	D10K: D10K: Other PT Losses	29.35	7.42	7.45	53.43	53.40	12.32	33.87
135	0	D10K: D10K: Other PT Losses	29.36	7.42	7.45	53.43	53.40	12.32	33.87
135	1	D10K: D10K: Other PT Losses	29.36	4.01	4.04	57.18	57.15	9.67	34.57
135	2	D10K: D10K: Other PT Losses	29.36	0.60	0.62	60.93	60.90	7.02	35.27
137	0	D10K: D10K: Other PT Losses	11.30	17.66	17.69	4.32	4.30	16.25	9.99
137	1	D10K: D10K: Other PT Losses	11.30	16.30	16.33	5.81	5.79	15.20	10.27
137	2	D10K: D10K: Other PT Losses	11.30	14.94	14.97	7.30	7.28	14.14	10.55
138	0	D10K: D10K: Other PT Losses	11.30	14.94	14.97	7.30	7.28	14.14	10.55
138	1	D10K: D10K: Other PT Losses	11.30	10.79	10.81	11.87	11.85	10.91	11.41
138	2	D10K: D10K: Other PT Losses	11.30	6.63	6.65	16.44	16.41	7.68	12.26
139	0	D10K: D10K: Other PT Losses	11.30	6.63	6.65	16.44	16.41	7.68	12.26
139	1	D10K: D10K: Other PT Losses	11.30	2.29	2.32	21.19	21.17	4.31	13.16
139	2	D10K: D10K: Other PT Losses	11.30	-2.04	-2.02	25.95	25.93	0.94	14.05

MEMBER STRESSES

DECK & CANOPY MEMBERS
D10K

(-) compression

			SHRINKAGE (SH)						
Member	Station	Result Case	(P/A) @ Centroid (kips/ft²)	Normal Stress @ Point 1 (kips/ft²)	Normal Stress @ Point 2 (kips/ft²)	Normal Stress @ Point 3 (kips/ft²)	Normal Stress @ Point 4 (kips/ft²)	Normal Stress @ Point 5 (kips/ft²)	Normal Stress @ Point 6 (kips/ft²)
140	0	D10K: D10K: Other PT Losses	11.30	-2.04	-2.02	25.95	25.93	0.94	14.05
140	1	D10K: D10K: Other PT Losses	11.30	-3.30	-3.28	27.33	27.31	-0.04	14.31
140	2	D10K: D10K: Other PT Losses	11.30	-4.56	-4.53	28.71	28.69	-1.01	14.57
142	0	D10K: D10K: Other PT Losses	3.58	20.83	20.86	-15.36	-15.39	17.00	0.03
142	1	D10K: D10K: Other PT Losses	3.58	17.39	17.42	-11.59	-11.61	14.32	0.73
142	2	D10K: D10K: Other PT Losses	3.58	13.95	13.97	-7.81	-7.83	11.65	1.44
143	0	D10K: D10K: Other PT Losses	3.58	13.95	13.97	-7.81	-7.83	11.65	1.44
143	1	D10K: D10K: Other PT Losses	3.58	6.94	6.96	-0.11	-0.13	6.20	2.89
143	2	D10K: D10K: Other PT Losses	3.58	-0.07	-0.05	7.59	7.57	0.75	4.33
144	0	D10K: D10K: Other PT Losses	3.58	-0.07	-0.05	7.59	7.57	0.75	4.33
144	1	D10K: D10K: Other PT Losses	3.58	-7.65	-7.63	15.91	15.89	-5.14	5.89
144	2	D10K: D10K: Other PT Losses	3.58	-15.23	-15.21	24.23	24.21	-11.03	7.45
145	0	D10K: D10K: Other PT Losses	3.58	-15.23	-15.21	24.22	24.21	-11.03	7.45
145	1	D10K: D10K: Other PT Losses	3.58	-17.31	-17.29	26.51	26.50	-12.65	7.88
145	2	D10K: D10K: Other PT Losses	3.58	-19.39	-19.38	28.80	28.78	-14.27	8.31
147	0	D10K: D10K: Other PT Losses	-1.88	-1.91	-1.89	-1.86	-1.87	-1.89	-1.88
147	1	D10K: D10K: Other PT Losses	-1.88	-3.75	-3.73	0.16	0.15	-3.32	-1.50
147	2	D10K: D10K: Other PT Losses	-1.88	-5.59	-5.57	2.19	2.17	-4.76	-1.12
148	0	D10K: D10K: Other PT Losses	-1.88	-5.59	-5.57	2.19	2.17	-4.76	-1.12
148	1	D10K: D10K: Other PT Losses	-1.88	-8.87	-8.86	5.79	5.78	-7.31	-0.44
148	2	D10K: D10K: Other PT Losses	-1.88	-12.16	-12.14	9.40	9.38	-9.86	0.23
149	0	D10K: D10K: Other PT Losses	-1.88	-12.16	-12.14	9.40	9.38	-9.86	0.23
149	1	D10K: D10K: Other PT Losses	-1.88	-15.74	-15.72	13.33	13.32	-12.64	0.97
149	2	D10K: D10K: Other PT Losses	-1.88	-19.32	-19.31	17.26	17.25	-15.43	1.71
150	0	D10K: D10K: Other PT Losses	-1.88	-19.32	-19.31	17.26	17.25	-15.43	1.71
150	1	D10K: D10K: Other PT Losses	-1.88	-20.34	-20.33	18.38	18.37	-16.22	1.92
150	2	D10K: D10K: Other PT Losses	-1.88	-21.36	-21.35	19.50	19.49	-17.01	2.13
152	0	D10K: D10K: Other PT Losses	-4.09	-29.50	-29.49	23.81	23.80	-23.83	1.14
152	1	D10K: D10K: Other PT Losses	-4.09	-26.51	-26.50	20.54	20.53	-21.51	0.53
152	2	D10K: D10K: Other PT Losses	-4.09	-23.53	-23.52	17.26	17.25	-19.19	-0.09
153	0	D10K: D10K: Other PT Losses	-4.09	-23.53	-23.52	17.26	17.25	-19.19	-0.09
153	1	D10K: D10K: Other PT Losses	-4.09	-18.65	-18.64	11.90	11.89	-15.40	-1.09
153	2	D10K: D10K: Other PT Losses	-4.09	-13.77	-13.76	6.54	6.53	-11.61	-2.09
154	0	D10K: D10K: Other PT Losses	-4.09	-13.77	-13.76	6.54	6.53	-11.61	-2.10
154	1	D10K: D10K: Other PT Losses	-4.09	-8.47	-8.46	0.73	0.72	-7.49	-3.19
154	2	D10K: D10K: Other PT Losses	-4.09	-3.18	-3.17	-5.09	-5.10	-3.38	-4.28
155	0	D10K: D10K: Other PT Losses	-4.09	-3.17	-3.17	-5.09	-5.09	-3.37	-4.27
155	1	D10K: D10K: Other PT Losses	-4.09	-1.52	-1.51	-6.91	-6.91	-2.09	-4.62
155	2	D10K: D10K: Other PT Losses	-4.09	0.14	0.15	-8.73	-8.74	-0.80	-4.96
157	0	D10K: D10K: Other PT Losses	-1.69	-35.53	-35.52	35.46	35.45	-27.99	5.27
157	1	D10K: D10K: Other PT Losses	-1.69	-30.74	-30.74	30.21	30.20	-24.27	4.29
157	2	D10K: D10K: Other PT Losses	-1.69	-25.96	-25.95	24.95	24.95	-20.55	3.30
158	0	D10K: D10K: Other PT Losses	-1.69	-25.96	-25.95	24.95	24.95	-20.55	3.30
158	1	D10K: D10K: Other PT Losses	-1.69	-10.63	-10.62	8.12	8.11	-8.63	0.15
158	2	D10K: D10K: Other PT Losses	-1.69	4.71	4.71	-8.72	-8.72	3.28	-3.01
159	0	D10K: D10K: Other PT Losses	-1.69	4.71	4.71	-8.72	-8.72	3.28	-3.01
159	1	D10K: D10K: Other PT Losses	-1.69	20.25	20.25	-25.78	-25.78	15.36	-6.21
159	2	D10K: D10K: Other PT Losses	-1.69	35.79	35.79	-42.85	-42.85	27.44	-9.41

MEMBER STRESSES

DECK & CANOPY MEMBERS
D10K

(-) compression

			PRESTRESS LOAD (PS)						
Member	Station	Result Case	(P/A) @ Centroid (kips/ft²)	Normal Stress @ Point 1 (kips/ft²)	Normal Stress @ Point 2 (kips/ft²)	Normal Stress @ Point 3 (kips/ft²)	Normal Stress @ Point 4 (kips/ft²)	Normal Stress @ Point 5 (kips/ft²)	Normal Stress @ Point 6 (kips/ft²)
1	0	D10K: D10K: Other PT Losses	-182.01	-69.58	-69.58	-165.57	-165.57	-103.75	-351.02
1	1	D10K: D10K: Other PT Losses	-182.01	-78.11	-78.11	-166.82	-166.82	-109.69	-338.21
1	2	D10K: D10K: Other PT Losses	-182.02	-86.64	-86.64	-168.07	-168.07	-115.63	-325.40
2	0	D10K: D10K: Other PT Losses	-181.41	-93.55	-93.55	-168.56	-168.56	-120.25	-313.48
2	1	D10K: D10K: Other PT Losses	-181.42	-120.68	-120.69	-172.54	-172.54	-139.15	-272.73
2	2	D10K: D10K: Other PT Losses	-181.44	-147.83	-147.83	-176.53	-176.53	-158.05	-231.98
3	0	D10K: D10K: Other PT Losses	-184.97	-148.55	-148.56	-179.64	-179.64	-159.62	-239.71
3	1	D10K: D10K: Other PT Losses	-191.76	-212.13	-212.13	-194.74	-194.73	-205.94	-161.13
3	2	D10K: D10K: Other PT Losses	-191.86	-209.03	-209.04	-194.37	-194.37	-203.81	-166.04
4	0	D10K: D10K: Other PT Losses	-191.86	-209.03	-209.04	-194.37	-194.37	-203.81	-166.04
4	1	D10K: D10K: Other PT Losses	-192.10	-202.53	-202.54	-193.63	-193.62	-199.36	-176.41
4	2	D10K: D10K: Other PT Losses	-192.32	-196.01	-196.02	-192.87	-192.85	-194.89	-186.77
5	0	D10K: D10K: Other PT Losses	-192.32	-196.01	-196.02	-192.87	-192.85	-194.89	-186.77
5	1	D10K: D10K: Other PT Losses	-192.56	-189.51	-189.53	-192.13	-192.11	-190.44	-197.14
5	2	D10K: D10K: Other PT Losses	-192.78	-182.99	-183.01	-191.36	-191.34	-185.97	-207.49
6	0	D10K: D10K: Other PT Losses	-192.78	-182.99	-183.01	-191.36	-191.34	-185.97	-207.49
6	1	D10K: D10K: Other PT Losses	-192.80	-182.11	-182.13	-191.25	-191.23	-185.37	-208.86
6	2	D10K: D10K: Other PT Losses	-192.84	-181.25	-181.27	-191.16	-191.14	-184.78	-210.26
7	0	D10K: D10K: Other PT Losses	-192.96	-196.62	-196.64	-193.51	-193.48	-195.51	-187.44
7	1	D10K: D10K: Other PT Losses	-192.97	-194.73	-194.76	-193.24	-193.22	-194.21	-190.30
7	2	D10K: D10K: Other PT Losses	-192.99	-192.85	-192.87	-192.98	-192.96	-192.90	-193.17
8	0	D10K: D10K: Other PT Losses	-196.13	-196.37	-196.39	-196.17	-196.15	-196.30	-195.74
8	1	D10K: D10K: Other PT Losses	-196.24	-195.80	-195.82	-196.19	-196.16	-195.94	-196.88
8	2	D10K: D10K: Other PT Losses	-196.32	-195.19	-195.22	-196.17	-196.15	-195.55	-198.00
9	0	D10K: D10K: Other PT Losses	-196.32	-195.19	-195.22	-196.17	-196.15	-195.55	-198.00
9	1	D10K: D10K: Other PT Losses	-196.56	-193.60	-193.63	-196.14	-196.12	-194.51	-200.99
9	2	D10K: D10K: Other PT Losses	-196.81	-192.01	-192.04	-196.13	-196.09	-193.48	-204.00
10	0	D10K: D10K: Other PT Losses	-196.81	-192.01	-192.04	-196.13	-196.09	-193.48	-204.00
10	1	D10K: D10K: Other PT Losses	-197.05	-190.45	-190.48	-196.10	-196.07	-192.47	-206.95
10	2	D10K: D10K: Other PT Losses	-197.30	-188.90	-188.93	-196.09	-196.06	-191.46	-209.91
11	0	D10K: D10K: Other PT Losses	-197.30	-188.90	-188.93	-196.09	-196.06	-191.46	-209.91
11	1	D10K: D10K: Other PT Losses	-197.32	-188.67	-188.71	-196.08	-196.04	-191.31	-210.29
11	2	D10K: D10K: Other PT Losses	-197.36	-188.47	-188.51	-196.09	-196.05	-191.19	-210.70
12	0	D10K: D10K: Other PT Losses	-197.82	-202.43	-202.47	-198.52	-198.48	-201.04	-190.87
12	1	D10K: D10K: Other PT Losses	-197.83	-200.48	-200.52	-198.24	-198.20	-199.69	-193.82
12	2	D10K: D10K: Other PT Losses	-197.85	-198.55	-198.59	-197.97	-197.93	-198.35	-196.77
13	0	D10K: D10K: Other PT Losses	-200.63	-200.33	-200.36	-200.61	-200.57	-200.43	-201.06
13	1	D10K: D10K: Other PT Losses	-200.71	-199.90	-199.94	-200.62	-200.58	-200.16	-201.91
13	2	D10K: D10K: Other PT Losses	-200.80	-199.48	-199.52	-200.63	-200.59	-199.89	-202.76
14	0	D10K: D10K: Other PT Losses	-200.80	-199.48	-199.52	-200.63	-200.59	-199.89	-202.76
14	1	D10K: D10K: Other PT Losses	-201.07	-198.17	-198.22	-200.67	-200.63	-199.07	-205.40
14	2	D10K: D10K: Other PT Losses	-201.33	-196.86	-196.91	-200.71	-200.66	-198.24	-208.01
15	0	D10K: D10K: Other PT Losses	-201.33	-196.86	-196.91	-200.71	-200.66	-198.24	-208.01
15	1	D10K: D10K: Other PT Losses	-201.60	-195.49	-195.54	-200.74	-200.69	-197.37	-210.75
15	2	D10K: D10K: Other PT Losses	-201.86	-194.11	-194.17	-200.76	-200.71	-196.49	-213.47
16	0	D10K: D10K: Other PT Losses	-201.86	-194.11	-194.17	-200.76	-200.71	-196.49	-213.47
16	1	D10K: D10K: Other PT Losses	-201.88	-193.94	-194.00	-200.75	-200.70	-196.38	-213.77
16	2	D10K: D10K: Other PT Losses	-201.93	-193.80	-193.86	-200.77	-200.71	-196.29	-214.09

MEMBER STRESSES

DECK & CANOPY MEMBERS
D10K

(-) compression

			PRESTRESS LOAD (PS)						
Member	Station	Result Case	(P/A) @ Centroid (kips/ft²)	Normal Stress @ Point 1 (kips/ft²)	Normal Stress @ Point 2 (kips/ft²)	Normal Stress @ Point 3 (kips/ft²)	Normal Stress @ Point 4 (kips/ft²)	Normal Stress @ Point 5 (kips/ft²)	Normal Stress @ Point 6 (kips/ft²)
17	0	D10K: D10K: Other PT Losses	-202.92	-204.83	-204.88	-203.23	-203.18	-204.27	-200.02
17	1	D10K: D10K: Other PT Losses	-202.93	-202.83	-202.89	-202.95	-202.89	-202.88	-203.05
17	2	D10K: D10K: Other PT Losses	-202.95	-200.83	-200.89	-202.67	-202.62	-201.50	-206.08
18	0	D10K: D10K: Other PT Losses	-205.13	-201.12	-201.17	-204.58	-204.52	-202.36	-211.12
18	1	D10K: D10K: Other PT Losses	-205.21	-200.86	-200.92	-204.61	-204.55	-202.20	-211.70
18	2	D10K: D10K: Other PT Losses	-205.26	-200.58	-200.64	-204.61	-204.55	-202.03	-212.25
19	0	D10K: D10K: Other PT Losses	-205.26	-200.58	-200.64	-204.61	-204.55	-202.03	-212.25
19	1	D10K: D10K: Other PT Losses	-205.56	-199.46	-199.52	-204.71	-204.64	-201.33	-214.69
19	2	D10K: D10K: Other PT Losses	-205.84	-198.30	-198.37	-204.77	-204.71	-200.62	-217.11
20	0	D10K: D10K: Other PT Losses	-205.84	-198.30	-198.37	-204.77	-204.71	-200.62	-217.11
20	1	D10K: D10K: Other PT Losses	-206.14	-197.18	-197.25	-204.87	-204.79	-199.92	-219.55
20	2	D10K: D10K: Other PT Losses	-206.41	-196.03	-196.10	-204.94	-204.86	-199.21	-221.96
21	0	D10K: D10K: Other PT Losses	-206.41	-196.03	-196.10	-204.94	-204.86	-199.21	-221.96
21	1	D10K: D10K: Other PT Losses	-206.46	-195.82	-195.90	-204.95	-204.87	-199.08	-222.39
21	2	D10K: D10K: Other PT Losses	-206.51	-195.62	-195.70	-204.96	-204.88	-198.96	-222.81
22	0	D10K: D10K: Other PT Losses	-208.31	-201.95	-202.03	-207.43	-207.35	-203.91	-217.81
22	1	D10K: D10K: Other PT Losses	-208.33	-199.89	-199.97	-207.14	-207.06	-202.48	-220.95
22	2	D10K: D10K: Other PT Losses	-208.34	-197.82	-197.90	-206.85	-206.77	-201.05	-224.09
23	0	D10K: D10K: Other PT Losses	-209.80	-193.86	-193.94	-207.51	-207.44	-198.73	-233.71
23	1	D10K: D10K: Other PT Losses	-209.85	-195.00	-195.07	-207.72	-207.64	-199.54	-232.12
23	2	D10K: D10K: Other PT Losses	-209.89	-196.13	-196.21	-207.92	-207.84	-200.34	-230.52
24	0	D10K: D10K: Other PT Losses	-209.89	-196.13	-196.21	-207.92	-207.84	-200.34	-230.52
24	1	D10K: D10K: Other PT Losses	-210.19	-203.72	-203.80	-209.29	-209.21	-205.71	-219.85
24	2	D10K: D10K: Other PT Losses	-210.24	-211.06	-211.15	-210.41	-210.32	-210.84	-208.92
25	0	D10K: D10K: Other PT Losses	-210.24	-211.06	-211.15	-210.41	-210.32	-210.84	-208.92
25	1	D10K: D10K: Other PT Losses	-209.94	-218.07	-218.16	-211.18	-211.09	-215.63	-197.65
25	2	D10K: D10K: Other PT Losses	-209.63	-225.06	-225.15	-211.94	-211.84	-220.40	-186.36
26	0	D10K: D10K: Other PT Losses	-209.63	-225.06	-225.15	-211.94	-211.84	-220.40	-186.36
26	1	D10K: D10K: Other PT Losses	-209.55	-226.85	-226.95	-212.14	-212.04	-221.63	-183.47
26	2	D10K: D10K: Other PT Losses	-205.89	-166.90	-167.00	-200.24	-200.14	-178.78	-264.43
29	0	D10K: D10K: Other PT Losses	-113.77	-92.38	-92.48	-110.70	-110.60	-98.92	-145.85
29	1	D10K: D10K: Other PT Losses	-112.97	-121.17	-121.27	-114.22	-114.13	-118.71	-100.56
29	2	D10K: D10K: Other PT Losses	-112.93	-120.09	-120.18	-114.03	-113.94	-117.94	-102.09
30	0	D10K: D10K: Other PT Losses	-112.93	-120.09	-120.18	-114.03	-113.94	-117.94	-102.09
30	1	D10K: D10K: Other PT Losses	-112.76	-115.76	-115.85	-113.25	-113.17	-114.88	-108.19
30	2	D10K: D10K: Other PT Losses	-112.61	-111.45	-111.52	-112.48	-112.41	-111.83	-114.30
31	0	D10K: D10K: Other PT Losses	-112.61	-111.45	-111.52	-112.48	-112.41	-111.83	-114.30
31	1	D10K: D10K: Other PT Losses	-112.44	-107.12	-107.19	-111.70	-111.64	-108.76	-120.39
31	2	D10K: D10K: Other PT Losses	-112.29	-102.80	-102.86	-110.93	-110.87	-105.71	-126.50
32	0	D10K: D10K: Other PT Losses	-112.29	-102.80	-102.86	-110.93	-110.87	-105.71	-126.50
32	1	D10K: D10K: Other PT Losses	-112.26	-102.17	-102.22	-110.82	-110.76	-105.25	-127.39
32	2	D10K: D10K: Other PT Losses	-112.24	-101.54	-101.59	-110.71	-110.65	-104.81	-128.29
33	0	D10K: D10K: Other PT Losses	-109.86	-98.91	-98.97	-108.29	-108.24	-102.26	-126.28
33	1	D10K: D10K: Other PT Losses	-109.86	-100.38	-100.44	-108.51	-108.45	-103.28	-124.07
33	2	D10K: D10K: Other PT Losses	-109.86	-101.85	-101.91	-108.72	-108.66	-104.30	-121.85
34	0	D10K: D10K: Other PT Losses	-109.66	-95.40	-95.46	-107.61	-107.55	-99.76	-131.06
34	1	D10K: D10K: Other PT Losses	-109.65	-96.37	-96.43	-107.74	-107.69	-100.43	-129.57
34	2	D10K: D10K: Other PT Losses	-109.63	-97.34	-97.39	-107.87	-107.81	-101.09	-128.07

MEMBER STRESSES

DECK & CANOPY MEMBERS
D10K

(-) compression

			PRESTRESS LOAD (PS)						
Member	Station	Result Case	(P/A) @ Centroid (kips/ft²)	Normal Stress @ Point 1 (kips/ft²)	Normal Stress @ Point 2 (kips/ft²)	Normal Stress @ Point 3 (kips/ft²)	Normal Stress @ Point 4 (kips/ft²)	Normal Stress @ Point 5 (kips/ft²)	Normal Stress @ Point 6 (kips/ft²)
35	0	D10K: D10K: Other PT Losses	-109.63	-97.34	-97.39	-107.87	-107.81	-101.09	-128.07
35	1	D10K: D10K: Other PT Losses	-109.57	-100.31	-100.37	-108.25	-108.19	-103.15	-123.44
35	2	D10K: D10K: Other PT Losses	-109.53	-103.31	-103.36	-108.65	-108.59	-105.22	-118.83
36	0	D10K: D10K: Other PT Losses	-109.53	-103.31	-103.36	-108.65	-108.59	-105.22	-118.83
36	1	D10K: D10K: Other PT Losses	-109.48	-106.31	-106.36	-109.04	-109.00	-107.29	-114.21
36	2	D10K: D10K: Other PT Losses	-109.42	-109.30	-109.35	-109.43	-109.38	-109.35	-109.57
37	0	D10K: D10K: Other PT Losses	-109.42	-109.30	-109.35	-109.43	-109.38	-109.35	-109.57
37	1	D10K: D10K: Other PT Losses	-109.39	-110.85	-110.89	-109.63	-109.59	-110.42	-107.18
37	2	D10K: D10K: Other PT Losses	-109.37	-112.39	-112.44	-109.83	-109.79	-111.49	-104.78
38	0	D10K: D10K: Other PT Losses	-106.77	-107.28	-107.32	-106.87	-106.82	-107.14	-105.96
38	1	D10K: D10K: Other PT Losses	-106.76	-108.81	-108.85	-107.08	-107.04	-108.20	-103.65
38	2	D10K: D10K: Other PT Losses	-106.76	-110.33	-110.38	-107.31	-107.26	-109.26	-101.35
39	0	D10K: D10K: Other PT Losses	-106.98	-101.93	-101.98	-106.27	-106.22	-103.48	-114.53
39	1	D10K: D10K: Other PT Losses	-106.97	-102.42	-102.46	-106.33	-106.29	-103.82	-113.78
39	2	D10K: D10K: Other PT Losses	-106.95	-102.89	-102.93	-106.38	-106.34	-104.14	-113.02
40	0	D10K: D10K: Other PT Losses	-106.95	-102.89	-102.93	-106.38	-106.34	-104.14	-113.02
40	1	D10K: D10K: Other PT Losses	-106.90	-104.32	-104.36	-106.55	-106.51	-105.12	-110.76
40	2	D10K: D10K: Other PT Losses	-106.85	-105.74	-105.77	-106.71	-106.67	-106.09	-108.50
41	0	D10K: D10K: Other PT Losses	-106.85	-105.74	-105.77	-106.71	-106.67	-106.09	-108.50
41	1	D10K: D10K: Other PT Losses	-106.81	-107.17	-107.20	-106.88	-106.85	-107.07	-106.24
41	2	D10K: D10K: Other PT Losses	-106.76	-108.59	-108.62	-107.04	-107.01	-108.05	-103.97
42	0	D10K: D10K: Other PT Losses	-106.76	-108.59	-108.62	-107.04	-107.01	-108.05	-103.97
42	1	D10K: D10K: Other PT Losses	-106.73	-109.48	-109.51	-107.15	-107.12	-108.65	-102.57
42	2	D10K: D10K: Other PT Losses	-106.70	-110.36	-110.39	-107.25	-107.22	-109.26	-101.17
43	0	D10K: D10K: Other PT Losses	-103.70	-104.66	-104.69	-103.86	-103.83	-104.38	-102.24
43	1	D10K: D10K: Other PT Losses	-103.70	-106.13	-106.16	-104.07	-104.04	-105.40	-100.02
43	2	D10K: D10K: Other PT Losses	-103.69	-107.61	-107.63	-104.28	-104.25	-106.43	-97.79
44	0	D10K: D10K: Other PT Losses	-104.18	-98.46	-98.49	-103.36	-103.33	-100.21	-112.74
44	1	D10K: D10K: Other PT Losses	-104.17	-99.08	-99.11	-103.44	-103.41	-100.64	-111.79
44	2	D10K: D10K: Other PT Losses	-104.14	-99.69	-99.72	-103.51	-103.48	-101.06	-110.81
45	0	D10K: D10K: Other PT Losses	-104.14	-99.69	-99.72	-103.51	-103.48	-101.06	-110.81
45	1	D10K: D10K: Other PT Losses	-104.10	-101.42	-101.45	-103.72	-103.70	-102.24	-108.11
45	2	D10K: D10K: Other PT Losses	-104.05	-103.15	-103.17	-103.93	-103.91	-103.43	-105.40
46	0	D10K: D10K: Other PT Losses	-104.05	-103.15	-103.17	-103.93	-103.91	-103.43	-105.40
46	1	D10K: D10K: Other PT Losses	-104.01	-104.87	-104.89	-104.15	-104.13	-104.62	-102.70
46	2	D10K: D10K: Other PT Losses	-103.97	-106.60	-106.62	-104.36	-104.35	-105.81	-100.00
47	0	D10K: D10K: Other PT Losses	-103.97	-106.60	-106.62	-104.36	-104.35	-105.81	-100.00
47	1	D10K: D10K: Other PT Losses	-103.94	-107.83	-107.85	-104.52	-104.50	-106.65	-98.08
47	2	D10K: D10K: Other PT Losses	-103.90	-109.05	-109.07	-104.66	-104.65	-107.49	-96.15
48	0	D10K: D10K: Other PT Losses	-100.64	-102.59	-102.61	-100.93	-100.92	-102.00	-97.70
48	1	D10K: D10K: Other PT Losses	-100.64	-104.09	-104.11	-101.15	-101.14	-103.05	-95.43
48	2	D10K: D10K: Other PT Losses	-100.64	-105.59	-105.61	-101.37	-101.35	-104.09	-93.17
49	0	D10K: D10K: Other PT Losses	-101.36	-95.25	-95.26	-100.47	-100.46	-97.11	-110.54
49	1	D10K: D10K: Other PT Losses	-101.35	-95.64	-95.66	-100.52	-100.51	-97.38	-109.92
49	2	D10K: D10K: Other PT Losses	-101.33	-96.03	-96.04	-100.56	-100.55	-97.64	-109.29
50	0	D10K: D10K: Other PT Losses	-101.33	-96.03	-96.04	-100.56	-100.55	-97.64	-109.29
50	1	D10K: D10K: Other PT Losses	-101.28	-97.06	-97.07	-100.67	-100.66	-98.35	-107.62
50	2	D10K: D10K: Other PT Losses	-101.24	-98.10	-98.10	-100.79	-100.78	-99.06	-105.97

MEMBER STRESSES

DECK & CANOPY MEMBERS
D10K

(-) compression

			PRESTRESS LOAD (PS)						
Member	Station	Result Case	(P/A) @ Centroid (kips/ft²)	Normal Stress @ Point 1 (kips/ft²)	Normal Stress @ Point 2 (kips/ft²)	Normal Stress @ Point 3 (kips/ft²)	Normal Stress @ Point 4 (kips/ft²)	Normal Stress @ Point 5 (kips/ft²)	Normal Stress @ Point 6 (kips/ft²)
51	0	D10K: D10K: Other PT Losses	-101.24	-98.10	-98.10	-100.79	-100.78	-99.06	-105.97
51	1	D10K: D10K: Other PT Losses	-101.20	-99.13	-99.13	-100.90	-100.89	-99.76	-104.31
51	2	D10K: D10K: Other PT Losses	-101.16	-100.17	-100.17	-101.02	-101.01	-100.47	-102.65
52	0	D10K: D10K: Other PT Losses	-101.16	-100.17	-100.17	-101.02	-101.01	-100.47	-102.65
52	1	D10K: D10K: Other PT Losses	-101.13	-100.99	-100.99	-101.11	-101.11	-101.03	-101.34
52	2	D10K: D10K: Other PT Losses	-100.85	-101.49	-101.49	-100.95	-100.95	-101.30	-99.90
60	0	D10K: D10K: Other PT Losses	0.00	0.00	0.00	0.00	0.00	0.00	0.00
60	1	D10K: D10K: Other PT Losses	-181.89	6.67	6.67	-154.32	-154.32	-50.64	-465.36
60	2	D10K: D10K: Other PT Losses	-181.92	-44.74	-44.74	-161.85	-161.85	-86.43	-388.13
101	0	D10K: D10K: Other PT Losses	-208.51	-520.47	-520.47	134.00	134.00	-450.95	-144.29
101	1	D10K: D10K: Other PT Losses	-211.65	-360.02	-360.02	-48.76	-48.75	-326.96	-181.11
101	2	D10K: D10K: Other PT Losses	-216.65	-317.83	-317.83	-105.56	-105.56	-295.29	-195.82
102	0	D10K: D10K: Other PT Losses	-216.65	-317.83	-317.83	-105.56	-105.56	-295.29	-195.82
102	1	D10K: D10K: Other PT Losses	-220.48	-330.73	-330.73	-99.43	-99.43	-306.16	-197.78
102	2	D10K: D10K: Other PT Losses	-222.61	-214.87	-214.87	-231.11	-231.11	-216.59	-224.20
103	0	D10K: D10K: Other PT Losses	-222.61	-214.86	-214.87	-231.11	-231.11	-216.59	-224.20
103	1	D10K: D10K: Other PT Losses	-231.34	-198.30	-198.31	-267.60	-267.60	-205.67	-238.14
103	2	D10K: D10K: Other PT Losses	-231.68	-209.65	-209.65	-255.87	-255.86	-214.56	-236.21
104	0	D10K: D10K: Other PT Losses	-231.68	-209.65	-209.65	-255.87	-255.86	-214.56	-236.21
104	1	D10K: D10K: Other PT Losses	-231.77	-214.56	-214.56	-250.68	-250.67	-218.40	-235.32
104	2	D10K: D10K: Other PT Losses	-231.87	-219.45	-219.46	-245.50	-245.49	-222.22	-234.42
106	0	D10K: D10K: Other PT Losses	-221.81	-273.09	-273.10	-165.50	-165.50	-261.66	-211.25
106	1	D10K: D10K: Other PT Losses	-221.87	-268.21	-268.22	-170.98	-170.97	-257.89	-212.32
106	2	D10K: D10K: Other PT Losses	-221.90	-263.30	-263.31	-176.44	-176.43	-254.08	-213.37
107	0	D10K: D10K: Other PT Losses	-221.90	-263.30	-263.31	-176.44	-176.44	-254.08	-213.38
107	1	D10K: D10K: Other PT Losses	-222.16	-244.89	-244.90	-197.19	-197.19	-239.83	-217.48
107	2	D10K: D10K: Other PT Losses	-222.41	-226.46	-226.47	-217.96	-217.95	-225.56	-221.57
108	0	D10K: D10K: Other PT Losses	-222.41	-226.46	-226.47	-217.96	-217.95	-225.56	-221.57
108	1	D10K: D10K: Other PT Losses	-222.67	-206.21	-206.22	-240.73	-240.72	-209.88	-226.05
108	2	D10K: D10K: Other PT Losses	-222.90	-185.91	-185.92	-263.50	-263.49	-194.16	-230.51
109	0	D10K: D10K: Other PT Losses	-222.90	-185.91	-185.92	-263.50	-263.49	-194.16	-230.51
109	1	D10K: D10K: Other PT Losses	-222.99	-180.39	-180.40	-269.77	-269.76	-189.89	-231.76
109	2	D10K: D10K: Other PT Losses	-223.07	-174.83	-174.85	-276.03	-276.02	-185.59	-233.00
111	0	D10K: D10K: Other PT Losses	-213.11	-241.92	-241.94	-181.48	-181.47	-235.51	-207.18
111	1	D10K: D10K: Other PT Losses	-213.15	-238.61	-238.62	-185.20	-185.19	-232.94	-207.91
111	2	D10K: D10K: Other PT Losses	-213.20	-235.33	-235.34	-188.90	-188.89	-230.40	-208.64
112	0	D10K: D10K: Other PT Losses	-213.20	-235.33	-235.34	-188.90	-188.89	-230.40	-208.64
112	1	D10K: D10K: Other PT Losses	-213.47	-223.10	-223.12	-202.89	-202.88	-220.96	-211.49
112	2	D10K: D10K: Other PT Losses	-213.72	-210.87	-210.88	-216.85	-216.84	-211.51	-214.31
113	0	D10K: D10K: Other PT Losses	-213.72	-210.87	-210.88	-216.85	-216.84	-211.51	-214.31
113	1	D10K: D10K: Other PT Losses	-213.98	-196.92	-196.93	-232.71	-232.70	-200.72	-217.49
113	2	D10K: D10K: Other PT Losses	-214.23	-182.93	-182.95	-248.59	-248.57	-189.91	-220.67
114	0	D10K: D10K: Other PT Losses	-214.23	-182.93	-182.95	-248.59	-248.57	-189.91	-220.67
114	1	D10K: D10K: Other PT Losses	-214.30	-180.16	-180.17	-251.79	-251.77	-187.77	-221.33
114	2	D10K: D10K: Other PT Losses	-214.38	-177.41	-177.42	-254.97	-254.96	-185.65	-221.99
116	0	D10K: D10K: Other PT Losses	-203.91	-220.72	-220.74	-185.45	-185.44	-216.98	-200.45
116	1	D10K: D10K: Other PT Losses	-203.94	-218.49	-218.51	-187.97	-187.95	-215.26	-200.95
116	2	D10K: D10K: Other PT Losses	-203.98	-216.30	-216.31	-190.46	-190.45	-213.56	-201.45

MEMBER STRESSES

DECK & CANOPY MEMBERS
D10K

(-) compression

			PRESTRESS LOAD (PS)						
Member	Station	Result Case	(P/A) @ Centroid (kips/ft²)	Normal Stress @ Point 1 (kips/ft²)	Normal Stress @ Point 2 (kips/ft²)	Normal Stress @ Point 3 (kips/ft²)	Normal Stress @ Point 4 (kips/ft²)	Normal Stress @ Point 5 (kips/ft²)	Normal Stress @ Point 6 (kips/ft²)
117	0	D10K: D10K: Other PT Losses	-203.98	-216.30	-216.31	-190.46	-190.45	-213.56	-201.45
117	1	D10K: D10K: Other PT Losses	-204.26	-208.13	-208.15	-200.00	-199.98	-207.28	-203.46
117	2	D10K: D10K: Other PT Losses	-204.53	-199.98	-200.00	-209.52	-209.51	-201.00	-205.47
118	0	D10K: D10K: Other PT Losses	-204.53	-199.98	-200.00	-209.52	-209.51	-201.00	-205.47
118	1	D10K: D10K: Other PT Losses	-204.79	-190.33	-190.35	-220.66	-220.65	-193.56	-207.76
118	2	D10K: D10K: Other PT Losses	-205.06	-180.68	-180.70	-231.83	-231.81	-186.12	-210.08
119	0	D10K: D10K: Other PT Losses	-205.06	-180.68	-180.70	-231.83	-231.81	-186.12	-210.08
119	1	D10K: D10K: Other PT Losses	-205.11	-179.56	-179.58	-233.16	-233.14	-185.26	-210.37
119	2	D10K: D10K: Other PT Losses	-205.11	-178.41	-178.43	-234.41	-234.40	-184.37	-210.60
121	0	D10K: D10K: Other PT Losses	-194.05	-192.83	-192.85	-195.38	-195.37	-193.11	-194.30
121	1	D10K: D10K: Other PT Losses	-194.03	-192.82	-192.83	-195.37	-195.35	-193.09	-194.28
121	2	D10K: D10K: Other PT Losses	-194.05	-192.84	-192.86	-195.38	-195.36	-193.11	-194.30
122	0	D10K: D10K: Other PT Losses	-194.05	-192.84	-192.86	-195.38	-195.36	-193.11	-194.30
122	1	D10K: D10K: Other PT Losses	-194.05	-189.19	-189.21	-199.38	-199.36	-190.28	-195.04
122	2	D10K: D10K: Other PT Losses	-194.06	-185.57	-185.59	-203.38	-203.36	-187.47	-195.80
123	0	D10K: D10K: Other PT Losses	-194.06	-185.57	-185.59	-203.38	-203.36	-187.47	-195.80
123	1	D10K: D10K: Other PT Losses	-194.06	-181.92	-181.94	-207.38	-207.36	-184.64	-196.55
123	2	D10K: D10K: Other PT Losses	-194.07	-178.30	-178.32	-211.38	-211.36	-181.83	-197.32
124	0	D10K: D10K: Other PT Losses	-194.07	-178.30	-178.32	-211.38	-211.36	-181.83	-197.32
124	1	D10K: D10K: Other PT Losses	-194.07	-178.29	-178.31	-211.40	-211.38	-181.82	-197.32
124	2	D10K: D10K: Other PT Losses	-194.07	-178.30	-178.32	-211.39	-211.37	-181.82	-197.32
126	0	D10K: D10K: Other PT Losses	-180.12	-170.81	-170.82	-190.34	-190.32	-172.89	-182.03
126	1	D10K: D10K: Other PT Losses	-180.10	-171.51	-171.53	-189.53	-189.52	-173.43	-181.87
126	2	D10K: D10K: Other PT Losses	-180.06	-172.19	-172.21	-188.69	-188.68	-173.95	-181.68
127	0	D10K: D10K: Other PT Losses	-180.06	-172.19	-172.21	-188.69	-188.68	-173.95	-181.68
127	1	D10K: D10K: Other PT Losses	-179.94	-171.38	-171.40	-189.33	-189.31	-173.29	-181.70
127	2	D10K: D10K: Other PT Losses	-179.81	-170.56	-170.58	-189.97	-189.95	-172.63	-181.72
128	0	D10K: D10K: Other PT Losses	-179.81	-170.56	-170.58	-189.97	-189.95	-172.63	-181.72
128	1	D10K: D10K: Other PT Losses	-179.69	-170.40	-170.42	-189.89	-189.87	-172.48	-181.60
133	0	D10K: D10K: Other PT Losses	-123.36	-117.56	-117.58	-129.72	-129.70	-118.86	-124.55
133	1	D10K: D10K: Other PT Losses	-122.90	-115.98	-116.01	-130.50	-130.48	-117.53	-124.33
133	2	D10K: D10K: Other PT Losses	-122.72	-115.52	-115.54	-130.61	-130.59	-117.13	-124.20
134	0	D10K: D10K: Other PT Losses	-122.72	-115.52	-115.54	-130.61	-130.59	-117.13	-124.20
134	1	D10K: D10K: Other PT Losses	-122.51	-114.47	-114.48	-131.35	-131.33	-116.27	-124.17
134	2	D10K: D10K: Other PT Losses	-122.34	-113.46	-113.48	-132.09	-132.08	-115.45	-124.17
135	0	D10K: D10K: Other PT Losses	-122.34	-113.46	-113.48	-132.09	-132.08	-115.45	-124.17
135	1	D10K: D10K: Other PT Losses	-122.29	-113.91	-113.92	-131.50	-131.49	-115.78	-124.02
135	2	D10K: D10K: Other PT Losses	-122.24	-114.34	-114.36	-130.91	-130.90	-116.11	-123.86
137	0	D10K: D10K: Other PT Losses	-144.54	-95.98	-96.00	-197.86	-197.85	-106.81	-154.54
137	1	D10K: D10K: Other PT Losses	-144.53	-101.05	-101.07	-192.26	-192.24	-110.74	-153.48
137	2	D10K: D10K: Other PT Losses	-144.49	-106.09	-106.11	-186.65	-186.64	-114.65	-152.40
138	0	D10K: D10K: Other PT Losses	-144.49	-106.09	-106.11	-186.65	-186.64	-114.65	-152.40
138	1	D10K: D10K: Other PT Losses	-144.41	-119.86	-119.88	-171.37	-171.35	-125.34	-149.47
138	2	D10K: D10K: Other PT Losses	-144.34	-133.64	-133.66	-156.08	-156.06	-136.03	-146.54
139	0	D10K: D10K: Other PT Losses	-144.34	-133.64	-133.66	-156.08	-156.06	-136.03	-146.54
139	1	D10K: D10K: Other PT Losses	-144.26	-149.76	-149.78	-138.21	-138.20	-148.54	-143.12
139	2	D10K: D10K: Other PT Losses	-144.17	-165.87	-165.88	-120.35	-120.34	-161.04	-139.70

MEMBER STRESSES

DECK & CANOPY MEMBERS
D10K

(-) compression

			PRESTRESS LOAD (PS)						
Member	Station	Result Case	(P/A) @ Centroid (kips/ft²)	Normal Stress @ Point 1 (kips/ft²)	Normal Stress @ Point 2 (kips/ft²)	Normal Stress @ Point 3 (kips/ft²)	Normal Stress @ Point 4 (kips/ft²)	Normal Stress @ Point 5 (kips/ft²)	Normal Stress @ Point 6 (kips/ft²)
140	0	D10K: D10K: Other PT Losses	-144.17	-165.87	-165.88	-120.35	-120.34	-161.04	-139.71
140	1	D10K: D10K: Other PT Losses	-144.16	-168.86	-168.87	-117.04	-117.02	-163.36	-139.07
140	2	D10K: D10K: Other PT Losses	-144.13	-171.83	-171.84	-113.72	-113.70	-165.66	-138.43
142	0	D10K: D10K: Other PT Losses	-151.87	-122.68	-122.69	-183.91	-183.90	-129.19	-157.87
142	1	D10K: D10K: Other PT Losses	-151.82	-127.81	-127.82	-178.18	-178.17	-133.17	-156.76
142	2	D10K: D10K: Other PT Losses	-151.79	-132.98	-132.99	-172.45	-172.44	-137.18	-155.66
143	0	D10K: D10K: Other PT Losses	-151.79	-132.98	-132.99	-172.45	-172.44	-137.18	-155.67
143	1	D10K: D10K: Other PT Losses	-151.71	-142.13	-142.14	-162.24	-162.23	-144.27	-153.69
143	2	D10K: D10K: Other PT Losses	-151.64	-151.29	-151.30	-152.03	-152.02	-151.37	-151.72
144	0	D10K: D10K: Other PT Losses	-151.64	-151.29	-151.30	-152.03	-152.02	-151.37	-151.72
144	1	D10K: D10K: Other PT Losses	-151.57	-162.91	-162.92	-139.11	-139.10	-160.38	-149.23
144	2	D10K: D10K: Other PT Losses	-151.48	-174.51	-174.52	-126.19	-126.18	-169.39	-146.74
145	0	D10K: D10K: Other PT Losses	-151.48	-174.52	-174.53	-126.20	-126.19	-169.39	-146.74
145	1	D10K: D10K: Other PT Losses	-151.47	-176.08	-176.09	-124.44	-124.43	-170.60	-146.40
145	2	D10K: D10K: Other PT Losses	-151.44	-177.63	-177.64	-122.68	-122.67	-171.80	-146.05
147	0	D10K: D10K: Other PT Losses	-159.13	-119.12	-119.13	-203.05	-203.04	-128.04	-167.36
147	1	D10K: D10K: Other PT Losses	-159.08	-126.74	-126.75	-194.59	-194.58	-133.95	-165.74
147	2	D10K: D10K: Other PT Losses	-159.05	-134.39	-134.40	-186.12	-186.11	-139.89	-164.12
148	0	D10K: D10K: Other PT Losses	-159.05	-134.39	-134.40	-186.12	-186.12	-139.89	-164.12
148	1	D10K: D10K: Other PT Losses	-158.97	-146.78	-146.79	-172.35	-172.34	-149.50	-161.48
148	2	D10K: D10K: Other PT Losses	-158.90	-159.20	-159.21	-158.58	-158.57	-159.14	-158.84
149	0	D10K: D10K: Other PT Losses	-158.90	-159.20	-159.21	-158.58	-158.57	-159.14	-158.84
149	1	D10K: D10K: Other PT Losses	-158.82	-174.37	-174.37	-141.76	-141.75	-170.91	-155.62
149	2	D10K: D10K: Other PT Losses	-158.75	-189.53	-189.54	-124.94	-124.94	-182.67	-152.41
150	0	D10K: D10K: Other PT Losses	-158.75	-189.53	-189.54	-124.95	-124.94	-182.68	-152.41
150	1	D10K: D10K: Other PT Losses	-158.73	-192.37	-192.37	-121.80	-121.79	-184.87	-151.81
150	2	D10K: D10K: Other PT Losses	-158.70	-195.18	-195.19	-118.65	-118.64	-187.06	-151.19
152	0	D10K: D10K: Other PT Losses	-166.41	-128.90	-128.90	-207.59	-207.58	-137.26	-174.13
152	1	D10K: D10K: Other PT Losses	-166.36	-136.05	-136.06	-199.63	-199.62	-142.81	-172.60
152	2	D10K: D10K: Other PT Losses	-166.32	-143.23	-143.24	-191.67	-191.67	-148.38	-171.07
153	0	D10K: D10K: Other PT Losses	-166.32	-143.23	-143.24	-191.67	-191.67	-148.38	-171.07
153	1	D10K: D10K: Other PT Losses	-166.24	-153.48	-153.48	-180.25	-180.25	-156.32	-168.87
153	2	D10K: D10K: Other PT Losses	-166.18	-163.76	-163.76	-168.84	-168.84	-164.30	-166.68
154	0	D10K: D10K: Other PT Losses	-166.18	-163.76	-163.76	-168.84	-168.84	-164.30	-166.68
154	1	D10K: D10K: Other PT Losses	-166.10	-176.89	-176.90	-154.25	-154.25	-174.49	-163.88
154	2	D10K: D10K: Other PT Losses	-166.02	-190.03	-190.04	-139.67	-139.66	-184.68	-161.08
155	0	D10K: D10K: Other PT Losses	-166.03	-190.03	-190.04	-139.67	-139.66	-184.68	-161.08
155	1	D10K: D10K: Other PT Losses	-166.01	-192.31	-192.32	-137.13	-137.12	-186.45	-160.59
155	2	D10K: D10K: Other PT Losses	-165.98	-194.58	-194.58	-134.58	-134.58	-188.20	-160.09
157	0	D10K: D10K: Other PT Losses	-174.57	-113.08	-113.09	-242.07	-242.07	-126.79	-187.23
157	1	D10K: D10K: Other PT Losses	-172.60	-116.85	-116.85	-233.82	-233.81	-129.28	-184.08
157	2	D10K: D10K: Other PT Losses	-168.03	-121.54	-121.54	-219.07	-219.07	-131.90	-177.60
158	0	D10K: D10K: Other PT Losses	-168.03	-121.54	-121.54	-219.07	-219.07	-131.90	-177.60
158	1	D10K: D10K: Other PT Losses	-167.88	-181.76	-181.76	-152.65	-152.64	-178.67	-165.03
158	2	D10K: D10K: Other PT Losses	-167.73	-241.87	-241.87	-86.32	-86.32	-225.35	-152.46
159	0	D10K: D10K: Other PT Losses	-167.73	-241.87	-241.87	-86.32	-86.32	-225.35	-152.46
159	1	D10K: D10K: Other PT Losses	-163.33	-255.89	-255.89	-61.70	-61.70	-235.26	-144.27
159	2	D10K: D10K: Other PT Losses	-163.17	-266.24	-266.24	-50.01	-50.01	-243.27	-141.96

MEMBER STRESSES

DECK & CANOPY MEMBERS
D10K

(-) compression

			PT RELAXATION (PS)						
Member	Station	Result Case	(P/A) @ Centroid (kips/ft²)	Normal Stress @ Point 1 (kips/ft²)	Normal Stress @ Point 2 (kips/ft²)	Normal Stress @ Point 3 (kips/ft²)	Normal Stress @ Point 4 (kips/ft²)	Normal Stress @ Point 5 (kips/ft²)	Normal Stress @ Point 6 (kips/ft²)
1	0	D10K: D10K: Other PT Losses	3.50	1.10	1.10	3.15	3.15	1.83	7.11
1	1	D10K: D10K: Other PT Losses	3.50	1.27	1.27	3.17	3.17	1.95	6.86
1	2	D10K: D10K: Other PT Losses	3.50	1.43	1.43	3.20	3.20	2.06	6.62
2	0	D10K: D10K: Other PT Losses	3.49	1.61	1.61	3.21	3.21	2.18	6.32
2	1	D10K: D10K: Other PT Losses	3.49	2.22	2.22	3.31	3.31	2.61	5.39
2	2	D10K: D10K: Other PT Losses	3.49	2.84	2.84	3.40	3.40	3.04	4.47
3	0	D10K: D10K: Other PT Losses	3.42	2.70	2.70	3.32	3.32	2.92	4.50
3	1	D10K: D10K: Other PT Losses	4.50	4.88	4.88	4.55	4.55	4.76	3.92
3	2	D10K: D10K: Other PT Losses	4.52	4.85	4.85	4.57	4.57	4.75	4.02
4	0	D10K: D10K: Other PT Losses	4.52	4.85	4.85	4.57	4.57	4.75	4.02
4	1	D10K: D10K: Other PT Losses	4.57	4.78	4.78	4.60	4.60	4.72	4.24
4	2	D10K: D10K: Other PT Losses	4.61	4.72	4.72	4.63	4.63	4.68	4.46
5	0	D10K: D10K: Other PT Losses	4.61	4.72	4.72	4.63	4.63	4.68	4.46
5	1	D10K: D10K: Other PT Losses	4.66	4.65	4.65	4.66	4.66	4.66	4.68
5	2	D10K: D10K: Other PT Losses	4.71	4.58	4.58	4.69	4.69	4.62	4.90
6	0	D10K: D10K: Other PT Losses	4.71	4.58	4.58	4.69	4.69	4.62	4.90
6	1	D10K: D10K: Other PT Losses	4.71	4.57	4.57	4.69	4.69	4.62	4.92
6	2	D10K: D10K: Other PT Losses	4.72	4.57	4.57	4.70	4.70	4.61	4.95
7	0	D10K: D10K: Other PT Losses	4.73	4.83	4.83	4.75	4.75	4.80	4.59
7	1	D10K: D10K: Other PT Losses	4.73	4.83	4.83	4.75	4.75	4.80	4.59
7	2	D10K: D10K: Other PT Losses	4.74	4.83	4.83	4.75	4.75	4.80	4.60
8	0	D10K: D10K: Other PT Losses	4.73	4.82	4.82	4.75	4.75	4.79	4.60
8	1	D10K: D10K: Other PT Losses	4.76	4.83	4.83	4.77	4.77	4.81	4.65
8	2	D10K: D10K: Other PT Losses	4.77	4.83	4.83	4.78	4.78	4.81	4.69
9	0	D10K: D10K: Other PT Losses	4.77	4.83	4.83	4.78	4.78	4.81	4.69
9	1	D10K: D10K: Other PT Losses	4.82	4.83	4.83	4.83	4.83	4.83	4.81
9	2	D10K: D10K: Other PT Losses	4.88	4.84	4.84	4.87	4.87	4.85	4.93
10	0	D10K: D10K: Other PT Losses	4.88	4.84	4.84	4.87	4.87	4.85	4.93
10	1	D10K: D10K: Other PT Losses	4.93	4.85	4.85	4.91	4.91	4.87	5.04
10	2	D10K: D10K: Other PT Losses	4.98	4.86	4.86	4.96	4.96	4.89	5.16
11	0	D10K: D10K: Other PT Losses	4.98	4.86	4.86	4.96	4.96	4.89	5.16
11	1	D10K: D10K: Other PT Losses	4.98	4.86	4.86	4.96	4.96	4.89	5.17
11	2	D10K: D10K: Other PT Losses	4.99	4.86	4.86	4.97	4.97	4.90	5.19
12	0	D10K: D10K: Other PT Losses	5.00	5.15	5.15	5.02	5.02	5.10	4.78
12	1	D10K: D10K: Other PT Losses	5.00	5.12	5.12	5.02	5.02	5.09	4.82
12	2	D10K: D10K: Other PT Losses	5.01	5.10	5.10	5.02	5.02	5.07	4.87
13	0	D10K: D10K: Other PT Losses	5.04	5.10	5.10	5.05	5.05	5.08	4.96
13	1	D10K: D10K: Other PT Losses	5.06	5.10	5.10	5.07	5.07	5.09	5.00
13	2	D10K: D10K: Other PT Losses	5.08	5.11	5.11	5.08	5.08	5.10	5.04
14	0	D10K: D10K: Other PT Losses	5.08	5.11	5.11	5.08	5.08	5.10	5.04
14	1	D10K: D10K: Other PT Losses	5.14	5.12	5.12	5.14	5.14	5.13	5.17
14	2	D10K: D10K: Other PT Losses	5.19	5.13	5.13	5.18	5.18	5.15	5.29
15	0	D10K: D10K: Other PT Losses	5.19	5.13	5.13	5.18	5.18	5.15	5.29
15	1	D10K: D10K: Other PT Losses	5.25	5.14	5.14	5.24	5.24	5.17	5.42
15	2	D10K: D10K: Other PT Losses	5.31	5.15	5.15	5.29	5.29	5.20	5.55
16	0	D10K: D10K: Other PT Losses	5.31	5.15	5.15	5.29	5.29	5.20	5.55
16	1	D10K: D10K: Other PT Losses	5.31	5.15	5.15	5.29	5.29	5.20	5.56
16	2	D10K: D10K: Other PT Losses	5.32	5.15	5.15	5.30	5.30	5.20	5.58

MEMBER STRESSES

DECK & CANOPY MEMBERS
D10K

(-) compression

			PT RELAXATION (PS)						
Member	Station	Result Case	(P/A) @ Centroid (kips/ft²)	Normal Stress @ Point 1 (kips/ft²)	Normal Stress @ Point 2 (kips/ft²)	Normal Stress @ Point 3 (kips/ft²)	Normal Stress @ Point 4 (kips/ft²)	Normal Stress @ Point 5 (kips/ft²)	Normal Stress @ Point 6 (kips/ft²)
17	0	D10K: D10K: Other PT Losses	5.35	5.43	5.43	5.36	5.36	5.41	5.23
17	1	D10K: D10K: Other PT Losses	5.35	5.38	5.38	5.36	5.36	5.37	5.31
17	2	D10K: D10K: Other PT Losses	5.36	5.33	5.33	5.35	5.35	5.34	5.39
18	0	D10K: D10K: Other PT Losses	5.41	5.33	5.33	5.40	5.40	5.36	5.54
18	1	D10K: D10K: Other PT Losses	5.43	5.34	5.34	5.42	5.42	5.37	5.57
18	2	D10K: D10K: Other PT Losses	5.44	5.35	5.35	5.43	5.43	5.38	5.59
19	0	D10K: D10K: Other PT Losses	5.44	5.35	5.35	5.43	5.43	5.38	5.59
19	1	D10K: D10K: Other PT Losses	5.51	5.38	5.38	5.49	5.49	5.42	5.71
19	2	D10K: D10K: Other PT Losses	5.57	5.40	5.40	5.54	5.54	5.45	5.82
20	0	D10K: D10K: Other PT Losses	5.57	5.40	5.40	5.54	5.54	5.45	5.82
20	1	D10K: D10K: Other PT Losses	5.63	5.44	5.44	5.61	5.61	5.50	5.93
20	2	D10K: D10K: Other PT Losses	5.70	5.46	5.46	5.66	5.66	5.53	6.04
21	0	D10K: D10K: Other PT Losses	5.70	5.46	5.46	5.66	5.66	5.53	6.04
21	1	D10K: D10K: Other PT Losses	5.71	5.47	5.47	5.67	5.67	5.54	6.06
21	2	D10K: D10K: Other PT Losses	5.72	5.47	5.47	5.68	5.68	5.55	6.08
22	0	D10K: D10K: Other PT Losses	5.78	5.67	5.67	5.77	5.77	5.71	5.95
22	1	D10K: D10K: Other PT Losses	5.79	5.59	5.59	5.76	5.76	5.65	6.08
22	2	D10K: D10K: Other PT Losses	5.79	5.52	5.52	5.75	5.75	5.60	6.20
23	0	D10K: D10K: Other PT Losses	5.85	5.45	5.45	5.79	5.79	5.57	6.45
23	1	D10K: D10K: Other PT Losses	5.86	5.48	5.48	5.80	5.80	5.60	6.42
23	2	D10K: D10K: Other PT Losses	5.87	5.52	5.52	5.81	5.82	5.62	6.39
24	0	D10K: D10K: Other PT Losses	5.87	5.52	5.52	5.81	5.82	5.62	6.39
24	1	D10K: D10K: Other PT Losses	5.94	5.75	5.75	5.91	5.91	5.81	6.21
24	2	D10K: D10K: Other PT Losses	5.95	5.93	5.93	5.94	5.94	5.93	5.97
25	0	D10K: D10K: Other PT Losses	5.95	5.93	5.93	5.94	5.94	5.93	5.97
25	1	D10K: D10K: Other PT Losses	5.88	6.03	6.03	5.90	5.90	5.98	5.65
25	2	D10K: D10K: Other PT Losses	5.81	6.12	6.12	5.85	5.85	6.03	5.34
26	0	D10K: D10K: Other PT Losses	5.81	6.12	6.12	5.85	5.85	6.03	5.34
26	1	D10K: D10K: Other PT Losses	5.79	6.15	6.15	5.84	5.84	6.04	5.26
26	2	D10K: D10K: Other PT Losses	5.08	3.98	3.98	4.92	4.92	4.31	6.74
29	0	D10K: D10K: Other PT Losses	2.53	1.90	1.90	2.44	2.44	2.09	3.48
29	1	D10K: D10K: Other PT Losses	2.34	2.44	2.44	2.35	2.35	2.41	2.19
29	2	D10K: D10K: Other PT Losses	2.33	2.42	2.42	2.34	2.34	2.39	2.19
30	0	D10K: D10K: Other PT Losses	2.33	2.42	2.42	2.34	2.34	2.39	2.19
30	1	D10K: D10K: Other PT Losses	2.30	2.35	2.35	2.30	2.31	2.33	2.22
30	2	D10K: D10K: Other PT Losses	2.27	2.28	2.27	2.27	2.27	2.27	2.25
31	0	D10K: D10K: Other PT Losses	2.27	2.28	2.27	2.27	2.27	2.27	2.25
31	1	D10K: D10K: Other PT Losses	2.24	2.20	2.20	2.23	2.23	2.21	2.29
31	2	D10K: D10K: Other PT Losses	2.21	2.13	2.13	2.20	2.20	2.16	2.32
32	0	D10K: D10K: Other PT Losses	2.21	2.13	2.13	2.20	2.20	2.16	2.32
32	1	D10K: D10K: Other PT Losses	2.20	2.12	2.12	2.19	2.19	2.15	2.32
32	2	D10K: D10K: Other PT Losses	2.20	2.11	2.11	2.19	2.19	2.14	2.33
33	0	D10K: D10K: Other PT Losses	2.13	2.01	2.01	2.11	2.11	2.05	2.30
33	1	D10K: D10K: Other PT Losses	2.12	2.06	2.06	2.11	2.12	2.08	2.22
33	2	D10K: D10K: Other PT Losses	2.12	2.11	2.10	2.12	2.12	2.11	2.15
34	0	D10K: D10K: Other PT Losses	2.12	1.92	1.92	2.09	2.09	1.98	2.41
34	1	D10K: D10K: Other PT Losses	2.12	1.94	1.94	2.09	2.09	2.00	2.38
34	2	D10K: D10K: Other PT Losses	2.11	1.96	1.96	2.09	2.09	2.01	2.34

MEMBER STRESSES

DECK & CANOPY MEMBERS
D10K

(-) compression

			PT RELAXATION (PS)						
Member	Station	Result Case	(P/A) @ Centroid (kips/ft²)	Normal Stress @ Point 1 (kips/ft²)	Normal Stress @ Point 2 (kips/ft²)	Normal Stress @ Point 3 (kips/ft²)	Normal Stress @ Point 4 (kips/ft²)	Normal Stress @ Point 5 (kips/ft²)	Normal Stress @ Point 6 (kips/ft²)
35	0	D10K: D10K: Other PT Losses	2.11	1.96	1.96	2.09	2.09	2.01	2.34
35	1	D10K: D10K: Other PT Losses	2.10	2.02	2.02	2.09	2.09	2.05	2.22
35	2	D10K: D10K: Other PT Losses	2.09	2.09	2.09	2.09	2.09	2.09	2.11
36	0	D10K: D10K: Other PT Losses	2.09	2.09	2.09	2.09	2.09	2.09	2.11
36	1	D10K: D10K: Other PT Losses	2.09	2.15	2.15	2.10	2.10	2.13	1.99
36	2	D10K: D10K: Other PT Losses	2.08	2.21	2.21	2.10	2.10	2.17	1.87
37	0	D10K: D10K: Other PT Losses	2.08	2.21	2.21	2.10	2.10	2.17	1.87
37	1	D10K: D10K: Other PT Losses	2.07	2.24	2.24	2.10	2.10	2.19	1.81
37	2	D10K: D10K: Other PT Losses	2.07	2.27	2.27	2.10	2.10	2.21	1.75
38	0	D10K: D10K: Other PT Losses	2.00	2.15	2.15	2.02	2.02	2.11	1.77
38	1	D10K: D10K: Other PT Losses	2.00	2.19	2.19	2.03	2.03	2.13	1.71
38	2	D10K: D10K: Other PT Losses	2.00	2.23	2.23	2.03	2.03	2.16	1.66
39	0	D10K: D10K: Other PT Losses	2.01	2.04	2.04	2.01	2.01	2.03	1.95
39	1	D10K: D10K: Other PT Losses	2.00	2.06	2.06	2.01	2.01	2.04	1.93
39	2	D10K: D10K: Other PT Losses	2.00	2.07	2.07	2.01	2.01	2.05	1.90
40	0	D10K: D10K: Other PT Losses	2.00	2.07	2.07	2.01	2.01	2.05	1.90
40	1	D10K: D10K: Other PT Losses	1.99	2.10	2.10	2.01	2.01	2.07	1.83
40	2	D10K: D10K: Other PT Losses	1.98	2.13	2.13	2.00	2.01	2.09	1.76
41	0	D10K: D10K: Other PT Losses	1.98	2.13	2.13	2.00	2.01	2.09	1.76
41	1	D10K: D10K: Other PT Losses	1.98	2.17	2.16	2.00	2.00	2.11	1.69
41	2	D10K: D10K: Other PT Losses	1.97	2.20	2.20	2.00	2.00	2.13	1.62
42	0	D10K: D10K: Other PT Losses	1.97	2.20	2.20	2.00	2.00	2.13	1.62
42	1	D10K: D10K: Other PT Losses	1.96	2.22	2.22	2.00	2.00	2.14	1.58
42	2	D10K: D10K: Other PT Losses	1.96	2.24	2.24	2.00	2.00	2.15	1.53
43	0	D10K: D10K: Other PT Losses	1.91	2.16	2.16	1.95	1.95	2.08	1.54
43	1	D10K: D10K: Other PT Losses	1.91	2.18	2.18	1.95	1.95	2.10	1.51
43	2	D10K: D10K: Other PT Losses	1.91	2.20	2.20	1.95	1.95	2.11	1.47
44	0	D10K: D10K: Other PT Losses	1.92	2.06	2.06	1.94	1.94	2.02	1.70
44	1	D10K: D10K: Other PT Losses	1.92	2.08	2.08	1.94	1.94	2.03	1.67
44	2	D10K: D10K: Other PT Losses	1.91	2.09	2.09	1.94	1.94	2.04	1.64
45	0	D10K: D10K: Other PT Losses	1.91	2.09	2.09	1.94	1.94	2.04	1.64
45	1	D10K: D10K: Other PT Losses	1.90	2.13	2.13	1.94	1.94	2.06	1.56
45	2	D10K: D10K: Other PT Losses	1.90	2.17	2.17	1.94	1.94	2.09	1.49
46	0	D10K: D10K: Other PT Losses	1.90	2.17	2.17	1.94	1.94	2.09	1.49
46	1	D10K: D10K: Other PT Losses	1.89	2.21	2.21	1.93	1.94	2.11	1.41
46	2	D10K: D10K: Other PT Losses	1.88	2.25	2.25	1.93	1.93	2.14	1.33
47	0	D10K: D10K: Other PT Losses	1.88	2.25	2.25	1.93	1.93	2.14	1.33
47	1	D10K: D10K: Other PT Losses	1.88	2.28	2.28	1.93	1.94	2.16	1.27
47	2	D10K: D10K: Other PT Losses	1.87	2.31	2.31	1.93	1.93	2.17	1.21
48	0	D10K: D10K: Other PT Losses	1.87	2.30	2.30	1.93	1.93	2.17	1.22
48	1	D10K: D10K: Other PT Losses	1.87	2.30	2.30	1.93	1.93	2.17	1.21
48	2	D10K: D10K: Other PT Losses	1.86	2.31	2.31	1.93	1.93	2.17	1.20
49	0	D10K: D10K: Other PT Losses	1.87	2.24	2.24	1.92	1.92	2.12	1.31
49	1	D10K: D10K: Other PT Losses	1.87	2.22	2.22	1.92	1.92	2.12	1.33
49	2	D10K: D10K: Other PT Losses	1.86	2.21	2.21	1.91	1.91	2.10	1.34
50	0	D10K: D10K: Other PT Losses	1.86	2.21	2.21	1.91	1.91	2.10	1.34
50	1	D10K: D10K: Other PT Losses	1.85	2.17	2.17	1.90	1.90	2.08	1.37
50	2	D10K: D10K: Other PT Losses	1.85	2.14	2.14	1.89	1.89	2.05	1.41

MEMBER STRESSES

DECK & CANOPY MEMBERS
D10K

(-) compression

			PT RELAXATION (PS)						
Member	Station	Result Case	(P/A) @ Centroid (kips/ft²)	Normal Stress @ Point 1 (kips/ft²)	Normal Stress @ Point 2 (kips/ft²)	Normal Stress @ Point 3 (kips/ft²)	Normal Stress @ Point 4 (kips/ft²)	Normal Stress @ Point 5 (kips/ft²)	Normal Stress @ Point 6 (kips/ft²)
51	0	D10K: D10K: Other PT Losses	1.85	2.14	2.14	1.89	1.89	2.05	1.41
51	1	D10K: D10K: Other PT Losses	1.84	2.10	2.10	1.88	1.88	2.02	1.44
51	2	D10K: D10K: Other PT Losses	1.83	2.07	2.07	1.87	1.87	2.00	1.48
52	0	D10K: D10K: Other PT Losses	1.83	2.07	2.07	1.87	1.87	2.00	1.48
52	1	D10K: D10K: Other PT Losses	1.83	2.04	2.04	1.86	1.86	1.97	1.51
52	2	D10K: D10K: Other PT Losses	1.78	1.97	1.97	1.81	1.81	1.91	1.50
60	0	D10K: D10K: Other PT Losses	0.00	0.00	0.00	0.00	0.00	0.00	0.00
60	1	D10K: D10K: Other PT Losses	3.50	-0.13	-0.13	2.97	2.97	0.97	8.95
60	2	D10K: D10K: Other PT Losses	3.50	0.86	0.86	3.12	3.12	1.66	7.47
101	0	D10K: D10K: Other PT Losses	2.05	4.73	4.73	-0.89	-0.89	4.13	1.50
101	1	D10K: D10K: Other PT Losses	2.32	3.68	3.68	0.83	0.83	3.38	2.04
101	2	D10K: D10K: Other PT Losses	2.87	4.15	4.15	1.46	1.46	3.86	2.60
102	0	D10K: D10K: Other PT Losses	2.87	4.15	4.15	1.46	1.46	3.86	2.60
102	1	D10K: D10K: Other PT Losses	3.61	5.77	5.77	1.24	1.24	5.29	3.17
102	2	D10K: D10K: Other PT Losses	3.89	3.89	3.89	3.89	3.89	3.89	3.89
103	0	D10K: D10K: Other PT Losses	3.89	3.89	3.89	3.89	3.89	3.89	3.89
103	1	D10K: D10K: Other PT Losses	5.12	4.74	4.74	5.54	5.54	4.83	5.20
103	2	D10K: D10K: Other PT Losses	5.19	4.88	4.88	5.53	5.53	4.95	5.25
104	0	D10K: D10K: Other PT Losses	5.19	4.88	4.88	5.53	5.53	4.95	5.25
104	1	D10K: D10K: Other PT Losses	5.21	4.96	4.96	5.48	5.48	5.01	5.26
104	2	D10K: D10K: Other PT Losses	5.22	5.03	5.03	5.43	5.43	5.08	5.26
106	0	D10K: D10K: Other PT Losses	5.21	5.98	5.98	4.37	4.37	5.81	5.05
106	1	D10K: D10K: Other PT Losses	5.22	5.91	5.91	4.47	4.47	5.75	5.08
106	2	D10K: D10K: Other PT Losses	5.23	5.83	5.83	4.57	4.57	5.69	5.10
107	0	D10K: D10K: Other PT Losses	5.23	5.83	5.83	4.57	4.57	5.69	5.10
107	1	D10K: D10K: Other PT Losses	5.28	5.61	5.61	4.90	4.90	5.54	5.21
107	2	D10K: D10K: Other PT Losses	5.32	5.40	5.40	5.24	5.24	5.38	5.31
108	0	D10K: D10K: Other PT Losses	5.32	5.40	5.40	5.24	5.24	5.38	5.31
108	1	D10K: D10K: Other PT Losses	5.37	5.14	5.14	5.63	5.63	5.19	5.42
108	2	D10K: D10K: Other PT Losses	5.42	4.87	4.87	6.02	6.02	4.99	5.53
109	0	D10K: D10K: Other PT Losses	5.42	4.87	4.87	6.02	6.02	4.99	5.53
109	1	D10K: D10K: Other PT Losses	5.44	4.82	4.82	6.12	6.12	4.96	5.57
109	2	D10K: D10K: Other PT Losses	5.45	4.76	4.76	6.21	6.21	4.92	5.60
111	0	D10K: D10K: Other PT Losses	5.30	6.06	6.06	4.47	4.47	5.89	5.15
111	1	D10K: D10K: Other PT Losses	5.31	5.98	5.98	4.57	4.57	5.83	5.17
111	2	D10K: D10K: Other PT Losses	5.32	5.91	5.91	4.66	4.66	5.78	5.20
112	0	D10K: D10K: Other PT Losses	5.32	5.91	5.91	4.66	4.66	5.78	5.20
112	1	D10K: D10K: Other PT Losses	5.37	5.66	5.66	5.05	5.05	5.60	5.31
112	2	D10K: D10K: Other PT Losses	5.42	5.41	5.41	5.43	5.43	5.42	5.42
113	0	D10K: D10K: Other PT Losses	5.42	5.41	5.41	5.43	5.43	5.42	5.42
113	1	D10K: D10K: Other PT Losses	5.47	5.12	5.12	5.86	5.86	5.20	5.54
113	2	D10K: D10K: Other PT Losses	5.52	4.82	4.82	6.29	6.29	4.98	5.66
114	0	D10K: D10K: Other PT Losses	5.52	4.82	4.82	6.29	6.29	4.98	5.66
114	1	D10K: D10K: Other PT Losses	5.54	4.77	4.77	6.38	6.38	4.94	5.69
114	2	D10K: D10K: Other PT Losses	5.55	4.72	4.72	6.47	6.47	4.90	5.72
116	0	D10K: D10K: Other PT Losses	5.27	5.80	5.80	4.69	4.69	5.68	5.16
116	1	D10K: D10K: Other PT Losses	5.28	5.74	5.74	4.77	4.77	5.64	5.18
116	2	D10K: D10K: Other PT Losses	5.29	5.69	5.69	4.84	4.84	5.60	5.20

MEMBER STRESSES

DECK & CANOPY MEMBERS
D10K

(-) compression

			PT RELAXATION (PS)						
Member	Station	Result Case	(P/A) @ Centroid (kips/ft²)	Normal Stress @ Point 1 (kips/ft²)	Normal Stress @ Point 2 (kips/ft²)	Normal Stress @ Point 3 (kips/ft²)	Normal Stress @ Point 4 (kips/ft²)	Normal Stress @ Point 5 (kips/ft²)	Normal Stress @ Point 6 (kips/ft²)
117	0	D10K: D10K: Other PT Losses	5.29	5.69	5.69	4.84	4.84	5.60	5.20
117	1	D10K: D10K: Other PT Losses	5.34	5.49	5.49	5.18	5.18	5.46	5.31
117	2	D10K: D10K: Other PT Losses	5.40	5.29	5.29	5.52	5.52	5.31	5.42
118	0	D10K: D10K: Other PT Losses	5.40	5.29	5.29	5.52	5.52	5.31	5.42
118	1	D10K: D10K: Other PT Losses	5.45	5.05	5.05	5.89	5.89	5.14	5.53
118	2	D10K: D10K: Other PT Losses	5.51	4.81	4.81	6.27	6.27	4.97	5.65
119	0	D10K: D10K: Other PT Losses	5.51	4.81	4.81	6.27	6.27	4.97	5.65
119	1	D10K: D10K: Other PT Losses	5.52	4.79	4.79	6.31	6.31	4.95	5.66
119	2	D10K: D10K: Other PT Losses	5.52	4.76	4.76	6.34	6.34	4.93	5.67
121	0	D10K: D10K: Other PT Losses	5.08	5.18	5.17	4.99	4.99	5.15	5.07
121	1	D10K: D10K: Other PT Losses	5.08	5.16	5.16	4.99	4.99	5.15	5.07
121	2	D10K: D10K: Other PT Losses	5.09	5.16	5.16	5.00	5.00	5.14	5.07
122	0	D10K: D10K: Other PT Losses	5.09	5.16	5.16	5.00	5.00	5.14	5.07
122	1	D10K: D10K: Other PT Losses	5.09	5.02	5.02	5.17	5.17	5.03	5.11
122	2	D10K: D10K: Other PT Losses	5.10	4.88	4.88	5.34	5.34	4.93	5.15
123	0	D10K: D10K: Other PT Losses	5.10	4.88	4.88	5.34	5.34	4.93	5.15
123	1	D10K: D10K: Other PT Losses	5.11	4.74	4.74	5.51	5.51	4.82	5.18
123	2	D10K: D10K: Other PT Losses	5.12	4.60	4.60	5.68	5.68	4.71	5.22
124	0	D10K: D10K: Other PT Losses	5.12	4.60	4.60	5.68	5.68	4.71	5.22
124	1	D10K: D10K: Other PT Losses	5.12	4.59	4.59	5.69	5.69	4.71	5.22
124	2	D10K: D10K: Other PT Losses	5.12	4.59	4.59	5.70	5.70	4.71	5.23
126	0	D10K: D10K: Other PT Losses	4.55	4.46	4.46	4.64	4.64	4.48	4.56
126	1	D10K: D10K: Other PT Losses	4.54	4.46	4.46	4.64	4.64	4.48	4.56
126	2	D10K: D10K: Other PT Losses	4.53	4.45	4.45	4.63	4.63	4.47	4.55
127	0	D10K: D10K: Other PT Losses	4.53	4.45	4.45	4.63	4.63	4.47	4.55
127	1	D10K: D10K: Other PT Losses	4.51	4.34	4.34	4.69	4.69	4.38	4.54
127	2	D10K: D10K: Other PT Losses	4.49	4.24	4.24	4.76	4.76	4.29	4.54
128	0	D10K: D10K: Other PT Losses	4.49	4.24	4.24	4.76	4.76	4.29	4.54
128	1	D10K: D10K: Other PT Losses	4.46	4.14	4.14	4.81	4.81	4.21	4.53
133	0	D10K: D10K: Other PT Losses	3.17	2.84	2.84	3.53	3.53	2.91	3.24
133	1	D10K: D10K: Other PT Losses	3.09	2.85	2.85	3.34	3.34	2.90	3.13
133	2	D10K: D10K: Other PT Losses	3.05	2.93	2.93	3.18	3.18	2.95	3.07
134	0	D10K: D10K: Other PT Losses	3.05	2.93	2.93	3.18	3.18	2.95	3.07
134	1	D10K: D10K: Other PT Losses	3.01	2.98	2.98	3.04	3.04	2.99	3.01
134	2	D10K: D10K: Other PT Losses	2.97	3.04	3.04	2.90	2.90	3.03	2.96
135	0	D10K: D10K: Other PT Losses	2.97	3.04	3.04	2.90	2.90	3.03	2.96
135	1	D10K: D10K: Other PT Losses	2.96	3.08	3.08	2.84	2.84	3.05	2.94
135	2	D10K: D10K: Other PT Losses	2.95	3.11	3.11	2.78	2.78	3.07	2.92
137	0	D10K: D10K: Other PT Losses	3.76	2.55	2.55	5.08	5.08	2.82	4.00
137	1	D10K: D10K: Other PT Losses	3.75	2.69	2.69	4.92	4.92	2.93	3.97
137	2	D10K: D10K: Other PT Losses	3.75	2.83	2.83	4.76	4.76	3.03	3.94
138	0	D10K: D10K: Other PT Losses	3.75	2.83	2.83	4.76	4.76	3.03	3.94
138	1	D10K: D10K: Other PT Losses	3.73	3.20	3.20	4.31	4.31	3.32	3.84
138	2	D10K: D10K: Other PT Losses	3.71	3.57	3.57	3.87	3.87	3.60	3.74
139	0	D10K: D10K: Other PT Losses	3.71	3.57	3.57	3.87	3.87	3.60	3.74
139	1	D10K: D10K: Other PT Losses	3.70	4.01	4.01	3.36	3.36	3.94	3.64
139	2	D10K: D10K: Other PT Losses	3.68	4.44	4.44	2.85	2.85	4.27	3.52

MEMBER STRESSES

DECK & CANOPY MEMBERS
D10K

(-) compression

			PT RELAXATION (PS)						
Member	Station	Result Case	(P/A) @ Centroid (kips/ft²)	Normal Stress @ Point 1 (kips/ft²)	Normal Stress @ Point 2 (kips/ft²)	Normal Stress @ Point 3 (kips/ft²)	Normal Stress @ Point 4 (kips/ft²)	Normal Stress @ Point 5 (kips/ft²)	Normal Stress @ Point 6 (kips/ft²)
140	0	D10K: D10K: Other PT Losses	3.68	4.44	4.44	2.85	2.85	4.27	3.52
140	1	D10K: D10K: Other PT Losses	3.68	4.53	4.53	2.75	2.75	4.34	3.50
140	2	D10K: D10K: Other PT Losses	3.67	4.61	4.61	2.65	2.65	4.40	3.48
142	0	D10K: D10K: Other PT Losses	3.92	3.29	3.29	4.62	4.62	3.43	4.05
142	1	D10K: D10K: Other PT Losses	3.91	3.41	3.41	4.46	4.46	3.53	4.02
142	2	D10K: D10K: Other PT Losses	3.91	3.55	3.55	4.30	4.30	3.63	3.98
143	0	D10K: D10K: Other PT Losses	3.91	3.55	3.55	4.30	4.30	3.63	3.98
143	1	D10K: D10K: Other PT Losses	3.89	3.78	3.78	4.01	4.01	3.81	3.92
143	2	D10K: D10K: Other PT Losses	3.88	4.02	4.02	3.73	3.73	3.99	3.85
144	0	D10K: D10K: Other PT Losses	3.88	4.02	4.02	3.73	3.73	3.99	3.85
144	1	D10K: D10K: Other PT Losses	3.86	4.32	4.32	3.37	3.37	4.21	3.77
144	2	D10K: D10K: Other PT Losses	3.85	4.61	4.61	3.01	3.01	4.44	3.69
145	0	D10K: D10K: Other PT Losses	3.85	4.61	4.61	3.01	3.01	4.44	3.69
145	1	D10K: D10K: Other PT Losses	3.84	4.65	4.65	2.95	2.95	4.47	3.68
145	2	D10K: D10K: Other PT Losses	3.84	4.69	4.69	2.90	2.90	4.50	3.66
147	0	D10K: D10K: Other PT Losses	4.03	3.47	3.47	4.64	4.65	3.59	4.15
147	1	D10K: D10K: Other PT Losses	4.02	3.61	3.61	4.47	4.47	3.70	4.10
147	2	D10K: D10K: Other PT Losses	4.01	3.76	3.76	4.29	4.29	3.82	4.07
148	0	D10K: D10K: Other PT Losses	4.01	3.76	3.76	4.29	4.29	3.82	4.07
148	1	D10K: D10K: Other PT Losses	4.00	3.98	3.98	4.01	4.01	3.99	4.00
148	2	D10K: D10K: Other PT Losses	3.98	4.21	4.21	3.73	3.73	4.16	3.94
149	0	D10K: D10K: Other PT Losses	3.98	4.21	4.21	3.73	3.73	4.16	3.94
149	1	D10K: D10K: Other PT Losses	3.97	4.50	4.50	3.38	3.38	4.38	3.86
149	2	D10K: D10K: Other PT Losses	3.95	4.79	4.79	3.03	3.03	4.60	3.78
150	0	D10K: D10K: Other PT Losses	3.95	4.79	4.79	3.03	3.03	4.60	3.78
150	1	D10K: D10K: Other PT Losses	3.95	4.84	4.84	2.98	2.98	4.64	3.77
150	2	D10K: D10K: Other PT Losses	3.94	4.88	4.88	2.92	2.92	4.67	3.75
152	0	D10K: D10K: Other PT Losses	4.07	4.04	4.04	4.10	4.10	4.04	4.07
152	1	D10K: D10K: Other PT Losses	4.06	4.08	4.08	4.03	4.03	4.08	4.05
152	2	D10K: D10K: Other PT Losses	4.05	4.13	4.13	3.96	3.96	4.12	4.03
153	0	D10K: D10K: Other PT Losses	4.05	4.13	4.13	3.96	3.96	4.12	4.03
153	1	D10K: D10K: Other PT Losses	4.04	4.18	4.18	3.88	3.88	4.15	4.01
153	2	D10K: D10K: Other PT Losses	4.02	4.23	4.23	3.80	3.80	4.18	3.98
154	0	D10K: D10K: Other PT Losses	4.02	4.23	4.23	3.80	3.80	4.18	3.98
154	1	D10K: D10K: Other PT Losses	4.01	4.32	4.32	3.66	3.66	4.25	3.94
154	2	D10K: D10K: Other PT Losses	3.99	4.42	4.42	3.53	3.53	4.32	3.91
155	0	D10K: D10K: Other PT Losses	3.99	4.42	4.42	3.53	3.53	4.32	3.91
155	1	D10K: D10K: Other PT Losses	3.99	4.41	4.41	3.53	3.53	4.31	3.90
155	2	D10K: D10K: Other PT Losses	3.98	4.39	4.39	3.54	3.54	4.30	3.90
157	0	D10K: D10K: Other PT Losses	4.02	3.89	3.89	4.18	4.18	3.92	4.05
157	1	D10K: D10K: Other PT Losses	3.80	3.75	3.75	3.85	3.85	3.76	3.81
157	2	D10K: D10K: Other PT Losses	3.08	2.50	2.50	3.73	3.73	2.63	3.20
158	0	D10K: D10K: Other PT Losses	3.08	2.50	2.50	3.73	3.73	2.63	3.20
158	1	D10K: D10K: Other PT Losses	3.06	3.54	3.54	2.53	2.53	3.43	2.96
158	2	D10K: D10K: Other PT Losses	3.03	4.56	4.56	1.35	1.35	4.22	2.72
159	0	D10K: D10K: Other PT Losses	3.03	4.56	4.56	1.35	1.35	4.22	2.72
159	1	D10K: D10K: Other PT Losses	2.26	2.99	2.99	1.46	1.46	2.83	2.11
159	2	D10K: D10K: Other PT Losses	2.24	3.10	3.10	1.29	1.29	2.91	2.06

MEMBER STRESSES

DECK & CANOPY MEMBERS
D10K

(-) compression

			OTHER PT LOSSES (PS)						
Member	Station	Result Case	(P/A) @ Centroid (kips/ft²)	Normal Stress @ Point 1 (kips/ft²)	Normal Stress @ Point 2 (kips/ft²)	Normal Stress @ Point 3 (kips/ft²)	Normal Stress @ Point 4 (kips/ft²)	Normal Stress @ Point 5 (kips/ft²)	Normal Stress @ Point 6 (kips/ft²)
1	0	D10K: D10K: Other PT Losses	12.29	4.53	4.53	11.15	11.15	6.89	23.95
1	1	D10K: D10K: Other PT Losses	14.28	5.68	5.68	13.02	13.02	8.30	27.21
1	2	D10K: D10K: Other PT Losses	14.62	6.46	6.46	13.43	13.43	8.94	26.88
2	0	D10K: D10K: Other PT Losses	14.58	6.93	6.93	13.46	13.46	9.26	26.08
2	1	D10K: D10K: Other PT Losses	14.92	9.58	9.58	14.14	14.14	11.20	22.94
2	2	D10K: D10K: Other PT Losses	13.91	11.44	11.44	13.55	13.55	12.19	17.61
3	0	D10K: D10K: Other PT Losses	13.76	10.93	10.93	13.35	13.35	11.79	18.02
3	1	D10K: D10K: Other PT Losses	12.83	14.44	14.44	13.07	13.07	13.95	10.40
3	2	D10K: D10K: Other PT Losses	13.03	14.49	14.49	13.25	13.25	14.05	10.84
4	0	D10K: D10K: Other PT Losses	13.03	14.49	14.49	13.25	13.25	14.05	10.84
4	1	D10K: D10K: Other PT Losses	13.23	14.37	14.37	13.40	13.40	14.03	11.52
4	2	D10K: D10K: Other PT Losses	13.37	14.18	14.19	13.49	13.49	13.94	12.14
5	0	D10K: D10K: Other PT Losses	13.37	14.18	14.19	13.49	13.49	13.94	12.14
5	1	D10K: D10K: Other PT Losses	13.50	14.00	14.00	13.58	13.58	13.85	12.76
5	2	D10K: D10K: Other PT Losses	13.52	13.70	13.70	13.55	13.55	13.64	13.26
6	0	D10K: D10K: Other PT Losses	13.52	13.70	13.70	13.55	13.55	13.64	13.26
6	1	D10K: D10K: Other PT Losses	13.55	13.68	13.68	13.56	13.56	13.64	13.35
6	2	D10K: D10K: Other PT Losses	13.62	13.71	13.71	13.63	13.63	13.68	13.49
7	0	D10K: D10K: Other PT Losses	13.65	14.74	14.74	13.81	13.81	14.41	12.01
7	1	D10K: D10K: Other PT Losses	13.72	14.77	14.77	13.88	13.88	14.45	12.16
7	2	D10K: D10K: Other PT Losses	13.45	14.44	14.44	13.60	13.60	14.14	11.96
8	0	D10K: D10K: Other PT Losses	13.52	14.45	14.45	13.66	13.66	14.17	12.12
8	1	D10K: D10K: Other PT Losses	13.25	14.12	14.12	13.37	13.37	13.85	11.94
8	2	D10K: D10K: Other PT Losses	13.30	14.11	14.11	13.41	13.41	13.86	12.08
9	0	D10K: D10K: Other PT Losses	13.30	14.11	14.11	13.41	13.41	13.86	12.08
9	1	D10K: D10K: Other PT Losses	13.34	14.00	14.00	13.44	13.44	13.80	12.36
9	2	D10K: D10K: Other PT Losses	13.40	13.89	13.89	13.47	13.47	13.74	12.66
10	0	D10K: D10K: Other PT Losses	13.40	13.89	13.89	13.47	13.47	13.74	12.66
10	1	D10K: D10K: Other PT Losses	13.46	13.80	13.80	13.51	13.51	13.69	12.95
10	2	D10K: D10K: Other PT Losses	13.47	13.65	13.65	13.49	13.49	13.59	13.20
11	0	D10K: D10K: Other PT Losses	13.47	13.65	13.65	13.49	13.49	13.59	13.20
11	1	D10K: D10K: Other PT Losses	13.48	13.64	13.64	13.50	13.50	13.59	13.24
11	2	D10K: D10K: Other PT Losses	13.49	13.63	13.63	13.51	13.51	13.58	13.28
12	0	D10K: D10K: Other PT Losses	13.53	14.85	14.85	13.72	13.72	14.45	11.54
12	1	D10K: D10K: Other PT Losses	13.54	14.71	14.71	13.71	13.71	14.35	11.78
12	2	D10K: D10K: Other PT Losses	13.73	14.76	14.76	13.88	13.88	14.45	12.19
13	0	D10K: D10K: Other PT Losses	13.94	14.78	14.78	14.06	14.06	14.53	12.66
13	1	D10K: D10K: Other PT Losses	14.13	14.92	14.92	14.25	14.25	14.68	12.95
13	2	D10K: D10K: Other PT Losses	14.14	14.86	14.86	14.25	14.25	14.64	13.06
14	0	D10K: D10K: Other PT Losses	14.14	14.86	14.86	14.25	14.25	14.64	13.06
14	1	D10K: D10K: Other PT Losses	14.15	14.67	14.67	14.23	14.23	14.51	13.37
14	2	D10K: D10K: Other PT Losses	14.14	14.46	14.46	14.19	14.19	14.36	13.67
15	0	D10K: D10K: Other PT Losses	14.14	14.46	14.46	14.19	14.19	14.36	13.67
15	1	D10K: D10K: Other PT Losses	14.13	14.24	14.24	14.15	14.15	14.21	13.97
15	2	D10K: D10K: Other PT Losses	14.14	14.04	14.04	14.12	14.12	14.07	14.28
16	0	D10K: D10K: Other PT Losses	14.14	14.04	14.04	14.12	14.12	14.07	14.28
16	1	D10K: D10K: Other PT Losses	14.14	14.02	14.02	14.12	14.13	14.06	14.32
16	2	D10K: D10K: Other PT Losses	14.22	14.08	14.08	14.20	14.20	14.12	14.44

MEMBER STRESSES

DECK & CANOPY MEMBERS
D10K

(-) compression

			OTHER PT LOSSES (PS)						
Member	Station	Result Case	(P/A) @ Centroid (kips/ft²)	Normal Stress @ Point 1 (kips/ft²)	Normal Stress @ Point 2 (kips/ft²)	Normal Stress @ Point 3 (kips/ft²)	Normal Stress @ Point 4 (kips/ft²)	Normal Stress @ Point 5 (kips/ft²)	Normal Stress @ Point 6 (kips/ft²)
17	0	D10K: D10K: Other PT Losses	14.32	15.16	15.15	14.44	14.44	14.90	13.07
17	1	D10K: D10K: Other PT Losses	14.40	15.03	15.03	14.49	14.50	14.84	13.47
17	2	D10K: D10K: Other PT Losses	14.87	15.29	15.29	14.93	14.93	15.16	14.25
18	0	D10K: D10K: Other PT Losses	15.10	15.28	15.28	15.13	15.13	15.23	14.82
18	1	D10K: D10K: Other PT Losses	15.57	15.72	15.72	15.59	15.59	15.67	15.35
18	2	D10K: D10K: Other PT Losses	15.57	15.68	15.68	15.58	15.58	15.64	15.40
19	0	D10K: D10K: Other PT Losses	15.57	15.68	15.68	15.58	15.58	15.64	15.40
19	1	D10K: D10K: Other PT Losses	15.57	15.52	15.52	15.56	15.56	15.54	15.63
19	2	D10K: D10K: Other PT Losses	15.52	15.33	15.33	15.49	15.49	15.39	15.81
20	0	D10K: D10K: Other PT Losses	15.52	15.33	15.33	15.49	15.49	15.39	15.81
20	1	D10K: D10K: Other PT Losses	15.48	15.13	15.13	15.43	15.43	15.23	16.00
20	2	D10K: D10K: Other PT Losses	15.47	14.97	14.97	15.39	15.39	15.12	16.22
21	0	D10K: D10K: Other PT Losses	15.47	14.97	14.97	15.39	15.39	15.12	16.22
21	1	D10K: D10K: Other PT Losses	15.46	14.93	14.93	15.38	15.38	15.09	16.25
21	2	D10K: D10K: Other PT Losses	15.80	15.25	15.25	15.72	15.72	15.42	16.64
22	0	D10K: D10K: Other PT Losses	16.01	15.92	15.91	16.00	16.00	15.94	16.16
22	1	D10K: D10K: Other PT Losses	16.36	16.02	16.02	16.31	16.31	16.12	16.88
22	2	D10K: D10K: Other PT Losses	16.81	16.22	16.21	16.72	16.72	16.39	17.69
23	0	D10K: D10K: Other PT Losses	16.97	15.96	15.96	16.82	16.82	16.27	18.49
23	1	D10K: D10K: Other PT Losses	17.42	16.46	16.46	17.28	17.28	16.75	18.85
23	2	D10K: D10K: Other PT Losses	17.42	16.53	16.53	17.29	17.29	16.80	18.76
24	0	D10K: D10K: Other PT Losses	17.42	16.53	16.53	17.29	17.29	16.80	18.76
24	1	D10K: D10K: Other PT Losses	17.43	16.94	16.94	17.36	17.36	17.09	18.17
24	2	D10K: D10K: Other PT Losses	17.37	17.28	17.28	17.36	17.36	17.31	17.51
25	0	D10K: D10K: Other PT Losses	17.37	17.28	17.28	17.36	17.36	17.31	17.51
25	1	D10K: D10K: Other PT Losses	17.31	17.62	17.62	17.36	17.36	17.53	16.85
25	2	D10K: D10K: Other PT Losses	17.30	18.01	18.01	17.41	17.41	17.79	16.24
26	0	D10K: D10K: Other PT Losses	17.30	18.01	18.01	17.41	17.41	17.79	16.24
26	1	D10K: D10K: Other PT Losses	17.29	18.10	18.10	17.41	17.41	17.86	16.08
26	2	D10K: D10K: Other PT Losses	15.52	11.94	11.94	15.00	15.00	13.03	20.90
29	0	D10K: D10K: Other PT Losses	7.92	5.84	5.84	7.61	7.62	6.47	11.04
29	1	D10K: D10K: Other PT Losses	8.43	8.58	8.58	8.45	8.45	8.53	8.20
29	2	D10K: D10K: Other PT Losses	8.41	8.54	8.54	8.43	8.43	8.50	8.22
30	0	D10K: D10K: Other PT Losses	8.41	8.54	8.54	8.43	8.43	8.50	8.22
30	1	D10K: D10K: Other PT Losses	8.39	8.43	8.43	8.40	8.40	8.42	8.34
30	2	D10K: D10K: Other PT Losses	8.41	8.35	8.35	8.40	8.40	8.37	8.50
31	0	D10K: D10K: Other PT Losses	8.41	8.35	8.35	8.40	8.40	8.37	8.50
31	1	D10K: D10K: Other PT Losses	8.42	8.28	8.27	8.40	8.40	8.32	8.65
31	2	D10K: D10K: Other PT Losses	8.42	8.18	8.18	8.39	8.39	8.25	8.79
32	0	D10K: D10K: Other PT Losses	8.42	8.18	8.18	8.39	8.39	8.25	8.79
32	1	D10K: D10K: Other PT Losses	8.42	8.17	8.16	8.38	8.39	8.24	8.81
32	2	D10K: D10K: Other PT Losses	8.21	7.94	7.94	8.17	8.17	8.02	8.62
33	0	D10K: D10K: Other PT Losses	7.95	7.57	7.56	7.89	7.89	7.68	8.52
33	1	D10K: D10K: Other PT Losses	7.73	7.52	7.52	7.70	7.70	7.59	8.05
33	2	D10K: D10K: Other PT Losses	7.73	7.68	7.68	7.72	7.72	7.69	7.79
34	0	D10K: D10K: Other PT Losses	7.71	6.98	6.98	7.60	7.60	7.20	8.79
34	1	D10K: D10K: Other PT Losses	7.70	7.07	7.07	7.60	7.61	7.26	8.64
34	2	D10K: D10K: Other PT Losses	7.70	7.16	7.16	7.62	7.62	7.32	8.50

MEMBER STRESSES

DECK & CANOPY MEMBERS
D10K

(-) compression

			OTHER PT LOSSES (PS)						
Member	Station	Result Case	(P/A) @ Centroid (kips/ft²)	Normal Stress @ Point 1 (kips/ft²)	Normal Stress @ Point 2 (kips/ft²)	Normal Stress @ Point 3 (kips/ft²)	Normal Stress @ Point 4 (kips/ft²)	Normal Stress @ Point 5 (kips/ft²)	Normal Stress @ Point 6 (kips/ft²)
35	0	D10K: D10K: Other PT Losses	7.70	7.16	7.16	7.62	7.62	7.32	8.50
35	1	D10K: D10K: Other PT Losses	7.69	7.45	7.45	7.66	7.66	7.52	8.06
35	2	D10K: D10K: Other PT Losses	7.69	7.74	7.73	7.70	7.70	7.72	7.62
36	0	D10K: D10K: Other PT Losses	7.69	7.74	7.73	7.70	7.70	7.72	7.62
36	1	D10K: D10K: Other PT Losses	7.69	8.03	8.02	7.74	7.74	7.92	7.18
36	2	D10K: D10K: Other PT Losses	7.69	8.32	8.31	7.78	7.78	8.13	6.75
37	0	D10K: D10K: Other PT Losses	7.69	8.32	8.31	7.78	7.78	8.13	6.75
37	1	D10K: D10K: Other PT Losses	7.69	8.47	8.47	7.80	7.80	8.23	6.52
37	2	D10K: D10K: Other PT Losses	7.52	8.45	8.44	7.65	7.65	8.16	6.12
38	0	D10K: D10K: Other PT Losses	7.26	7.99	7.99	7.37	7.37	7.77	6.17
38	1	D10K: D10K: Other PT Losses	7.09	7.97	7.97	7.22	7.22	7.70	5.78
38	2	D10K: D10K: Other PT Losses	7.11	8.13	8.13	7.26	7.26	7.82	5.57
39	0	D10K: D10K: Other PT Losses	7.13	7.35	7.35	7.16	7.16	7.28	6.80
39	1	D10K: D10K: Other PT Losses	7.14	7.42	7.42	7.18	7.18	7.34	6.72
39	2	D10K: D10K: Other PT Losses	7.14	7.48	7.48	7.19	7.19	7.38	6.63
40	0	D10K: D10K: Other PT Losses	7.14	7.48	7.48	7.19	7.19	7.38	6.63
40	1	D10K: D10K: Other PT Losses	7.14	7.66	7.66	7.22	7.22	7.50	6.36
40	2	D10K: D10K: Other PT Losses	7.14	7.84	7.83	7.24	7.24	7.62	6.10
41	0	D10K: D10K: Other PT Losses	7.14	7.84	7.83	7.24	7.24	7.62	6.10
41	1	D10K: D10K: Other PT Losses	7.14	8.01	8.01	7.27	7.27	7.75	5.83
41	2	D10K: D10K: Other PT Losses	7.14	8.19	8.19	7.29	7.29	7.87	5.56
42	0	D10K: D10K: Other PT Losses	7.14	8.19	8.19	7.29	7.29	7.87	5.56
42	1	D10K: D10K: Other PT Losses	7.14	8.30	8.30	7.31	7.31	7.95	5.39
42	2	D10K: D10K: Other PT Losses	7.01	8.29	8.28	7.20	7.20	7.90	5.09
43	0	D10K: D10K: Other PT Losses	6.80	7.92	7.92	6.97	6.97	7.58	5.13
43	1	D10K: D10K: Other PT Losses	6.68	7.90	7.89	6.85	6.86	7.52	4.84
43	2	D10K: D10K: Other PT Losses	6.69	8.01	8.01	6.88	6.88	7.61	4.70
44	0	D10K: D10K: Other PT Losses	6.72	7.34	7.34	6.81	6.81	7.15	5.78
44	1	D10K: D10K: Other PT Losses	6.73	7.43	7.43	6.83	6.83	7.22	5.67
44	2	D10K: D10K: Other PT Losses	6.73	7.51	7.50	6.84	6.84	7.27	5.56
45	0	D10K: D10K: Other PT Losses	6.73	7.51	7.50	6.84	6.84	7.27	5.56
45	1	D10K: D10K: Other PT Losses	6.72	7.72	7.72	6.87	6.87	7.42	5.23
45	2	D10K: D10K: Other PT Losses	6.72	7.93	7.93	6.89	6.89	7.56	4.90
46	0	D10K: D10K: Other PT Losses	6.72	7.93	7.93	6.89	6.89	7.56	4.90
46	1	D10K: D10K: Other PT Losses	6.71	8.14	8.14	6.92	6.92	7.70	4.57
46	2	D10K: D10K: Other PT Losses	6.70	8.34	8.34	6.94	6.94	7.84	4.24
47	0	D10K: D10K: Other PT Losses	6.70	8.34	8.34	6.94	6.94	7.84	4.24
47	1	D10K: D10K: Other PT Losses	6.69	8.49	8.49	6.96	6.96	7.94	4.00
47	2	D10K: D10K: Other PT Losses	6.66	8.61	8.61	6.95	6.95	8.02	3.74
48	0	D10K: D10K: Other PT Losses	6.58	8.48	8.48	6.86	6.86	7.90	3.73
48	1	D10K: D10K: Other PT Losses	6.55	8.50	8.50	6.84	6.84	7.91	3.63
48	2	D10K: D10K: Other PT Losses	6.56	8.55	8.55	6.85	6.85	7.94	3.56
49	0	D10K: D10K: Other PT Losses	6.58	8.05	8.05	6.80	6.80	7.60	4.37
49	1	D10K: D10K: Other PT Losses	6.58	8.00	8.00	6.79	6.79	7.57	4.46
49	2	D10K: D10K: Other PT Losses	6.58	7.93	7.93	6.77	6.78	7.52	4.54
50	0	D10K: D10K: Other PT Losses	6.58	7.93	7.93	6.77	6.78	7.52	4.54
50	1	D10K: D10K: Other PT Losses	6.57	7.77	7.77	6.74	6.74	7.41	4.76
50	2	D10K: D10K: Other PT Losses	6.56	7.61	7.61	6.71	6.71	7.29	4.98

MEMBER STRESSES

DECK & CANOPY MEMBERS
D10K

(-) compression

			OTHER PT LOSSES (PS)						
Member	Station	Result Case	(P/A) @ Centroid (kips/ft²)	Normal Stress @ Point 1 (kips/ft²)	Normal Stress @ Point 2 (kips/ft²)	Normal Stress @ Point 3 (kips/ft²)	Normal Stress @ Point 4 (kips/ft²)	Normal Stress @ Point 5 (kips/ft²)	Normal Stress @ Point 6 (kips/ft²)
51	0	D10K: D10K: Other PT Losses	6.56	7.61	7.61	6.71	6.71	7.29	4.98
51	1	D10K: D10K: Other PT Losses	6.55	7.45	7.45	6.68	6.68	7.18	5.20
51	2	D10K: D10K: Other PT Losses	6.55	7.30	7.30	6.66	6.66	7.07	5.42
52	0	D10K: D10K: Other PT Losses	6.55	7.30	7.30	6.66	6.66	7.07	5.42
52	1	D10K: D10K: Other PT Losses	6.55	7.18	7.18	6.64	6.64	6.99	5.60
52	2	D10K: D10K: Other PT Losses	6.59	7.10	7.10	6.67	6.67	6.95	5.83
60	0	D10K: D10K: Other PT Losses	0.00	0.00	0.00	0.00	0.00	0.00	0.00
60	1	D10K: D10K: Other PT Losses	10.29	-0.38	-0.38	8.73	8.73	2.87	26.33
60	2	D10K: D10K: Other PT Losses	12.29	3.02	3.02	10.93	10.93	5.84	26.22
101	0	D10K: D10K: Other PT Losses	17.58	39.80	39.80	-6.82	-6.82	34.84	13.00
101	1	D10K: D10K: Other PT Losses	21.52	33.30	33.30	8.60	8.60	30.67	19.10
101	2	D10K: D10K: Other PT Losses	21.81	28.74	28.74	14.19	14.19	27.20	20.38
102	0	D10K: D10K: Other PT Losses	21.81	28.74	28.74	14.19	14.19	27.20	20.38
102	1	D10K: D10K: Other PT Losses	21.88	30.68	30.68	12.21	12.21	28.72	20.07
102	2	D10K: D10K: Other PT Losses	22.24	20.97	20.97	23.65	23.65	21.25	22.51
103	0	D10K: D10K: Other PT Losses	22.24	20.97	20.97	23.65	23.65	21.25	22.51
103	1	D10K: D10K: Other PT Losses	22.77	20.20	20.20	25.58	25.58	20.78	23.30
103	2	D10K: D10K: Other PT Losses	23.04	23.00	23.00	23.08	23.08	23.01	23.05
104	0	D10K: D10K: Other PT Losses	23.04	23.00	23.00	23.08	23.08	23.01	23.05
104	1	D10K: D10K: Other PT Losses	23.31	24.14	24.14	22.40	22.40	23.95	23.14
104	2	D10K: D10K: Other PT Losses	11.66	14.86	14.86	8.14	8.14	14.14	11.00
106	0	D10K: D10K: Other PT Losses	13.15	20.11	20.11	5.51	5.51	18.56	11.72
106	1	D10K: D10K: Other PT Losses	26.75	31.37	31.37	21.67	21.67	30.34	25.80
106	2	D10K: D10K: Other PT Losses	26.61	30.78	30.78	22.03	22.03	29.85	25.75
107	0	D10K: D10K: Other PT Losses	26.61	30.78	30.78	22.03	22.03	29.85	25.75
107	1	D10K: D10K: Other PT Losses	26.46	29.22	29.22	23.44	23.44	28.61	25.90
107	2	D10K: D10K: Other PT Losses	26.52	27.86	27.86	25.05	25.05	27.56	26.25
108	0	D10K: D10K: Other PT Losses	26.52	27.86	27.86	25.05	25.05	27.56	26.25
108	1	D10K: D10K: Other PT Losses	26.58	26.25	26.25	26.94	26.94	26.33	26.65
108	2	D10K: D10K: Other PT Losses	26.74	24.76	24.76	28.92	28.92	25.20	27.15
109	0	D10K: D10K: Other PT Losses	26.74	24.76	24.76	28.92	28.92	25.20	27.15
109	1	D10K: D10K: Other PT Losses	26.90	24.54	24.54	29.50	29.50	25.06	27.39
109	2	D10K: D10K: Other PT Losses	13.26	12.40	12.40	14.19	14.19	12.59	13.43
111	0	D10K: D10K: Other PT Losses	12.96	18.67	18.67	6.69	6.69	17.40	11.78
111	1	D10K: D10K: Other PT Losses	27.09	30.35	30.35	23.51	23.51	29.63	26.42
111	2	D10K: D10K: Other PT Losses	26.96	29.85	29.85	23.78	23.78	29.21	26.36
112	0	D10K: D10K: Other PT Losses	26.96	29.85	29.85	23.78	23.78	29.21	26.36
112	1	D10K: D10K: Other PT Losses	26.82	28.56	28.56	24.92	24.92	28.17	26.47
112	2	D10K: D10K: Other PT Losses	26.81	27.40	27.40	26.17	26.17	27.27	26.69
113	0	D10K: D10K: Other PT Losses	26.81	27.40	27.40	26.17	26.17	27.27	26.69
113	1	D10K: D10K: Other PT Losses	26.80	26.01	26.01	27.67	27.67	26.19	26.97
113	2	D10K: D10K: Other PT Losses	26.97	24.83	24.83	29.33	29.33	25.30	27.42
114	0	D10K: D10K: Other PT Losses	26.97	24.83	24.83	29.33	29.33	25.30	27.42
114	1	D10K: D10K: Other PT Losses	27.15	24.77	24.77	29.75	29.75	25.30	27.63
114	2	D10K: D10K: Other PT Losses	12.99	12.50	12.50	13.53	13.53	12.61	13.09
116	0	D10K: D10K: Other PT Losses	11.12	15.85	15.85	5.92	5.92	14.80	10.14
116	1	D10K: D10K: Other PT Losses	24.49	26.86	26.86	21.88	21.88	26.34	24.00
116	2	D10K: D10K: Other PT Losses	24.33	26.43	26.43	22.03	22.03	25.96	23.90

MEMBER STRESSES

DECK & CANOPY MEMBERS
D10K

(-) compression

			OTHER PT LOSSES (PS)						
Member	Station	Result Case	(P/A) @ Centroid (kips/ft²)	Normal Stress @ Point 1 (kips/ft²)	Normal Stress @ Point 2 (kips/ft²)	Normal Stress @ Point 3 (kips/ft²)	Normal Stress @ Point 4 (kips/ft²)	Normal Stress @ Point 5 (kips/ft²)	Normal Stress @ Point 6 (kips/ft²)
117	0	D10K: D10K: Other PT Losses	24.33	26.43	26.43	22.03	22.03	25.96	23.90
117	1	D10K: D10K: Other PT Losses	24.18	25.28	25.28	22.97	22.97	25.04	23.95
117	2	D10K: D10K: Other PT Losses	24.16	24.28	24.28	24.02	24.02	24.26	24.13
118	0	D10K: D10K: Other PT Losses	24.16	24.28	24.28	24.02	24.02	24.26	24.13
118	1	D10K: D10K: Other PT Losses	24.14	23.11	23.11	25.26	25.26	23.34	24.35
118	2	D10K: D10K: Other PT Losses	24.32	22.15	22.15	26.71	26.71	22.63	24.77
119	0	D10K: D10K: Other PT Losses	24.32	22.15	22.15	26.71	26.71	22.63	24.77
119	1	D10K: D10K: Other PT Losses	24.51	22.21	22.21	27.03	27.03	22.72	24.98
119	2	D10K: D10K: Other PT Losses	11.11	10.78	10.78	11.46	11.46	10.86	11.17
121	0	D10K: D10K: Other PT Losses	7.75	10.24	10.24	5.01	5.01	9.68	7.24
121	1	D10K: D10K: Other PT Losses	19.10	19.79	19.79	18.34	18.34	19.64	18.96
121	2	D10K: D10K: Other PT Losses	18.96	19.61	19.61	18.25	18.25	19.46	18.83
122	0	D10K: D10K: Other PT Losses	18.96	19.61	19.61	18.25	18.25	19.46	18.83
122	1	D10K: D10K: Other PT Losses	18.82	18.88	18.88	18.77	18.77	18.86	18.81
122	2	D10K: D10K: Other PT Losses	18.80	18.27	18.27	19.38	19.38	18.39	18.90
123	0	D10K: D10K: Other PT Losses	18.80	18.27	18.27	19.38	19.38	18.39	18.90
123	1	D10K: D10K: Other PT Losses	18.77	17.66	17.66	19.98	19.99	17.91	19.00
123	2	D10K: D10K: Other PT Losses	18.90	17.22	17.22	20.75	20.75	17.59	19.25
124	0	D10K: D10K: Other PT Losses	18.90	17.22	17.22	20.75	20.75	17.59	19.25
124	1	D10K: D10K: Other PT Losses	19.04	17.33	17.33	20.91	20.91	17.71	19.39
124	2	D10K: D10K: Other PT Losses	9.09	7.99	7.99	10.30	10.30	8.24	9.32
126	0	D10K: D10K: Other PT Losses	4.66	4.91	4.91	4.39	4.39	4.85	4.61
126	1	D10K: D10K: Other PT Losses	11.69	11.94	11.94	11.41	11.41	11.89	11.64
126	2	D10K: D10K: Other PT Losses	11.58	11.74	11.74	11.40	11.40	11.70	11.54
127	0	D10K: D10K: Other PT Losses	11.58	11.74	11.74	11.40	11.40	11.70	11.54
127	1	D10K: D10K: Other PT Losses	11.46	11.06	11.06	11.91	11.91	11.15	11.55
127	2	D10K: D10K: Other PT Losses	11.45	10.47	10.47	12.51	12.51	10.69	11.65
128	0	D10K: D10K: Other PT Losses	11.45	10.47	10.47	12.51	12.51	10.69	11.65
128	1	D10K: D10K: Other PT Losses	11.43	9.93	9.93	13.08	13.08	10.26	11.74
133	0	D10K: D10K: Other PT Losses	9.38	8.71	8.71	10.11	10.11	8.86	9.52
133	1	D10K: D10K: Other PT Losses	9.36	8.61	8.61	10.17	10.17	8.78	9.51
133	2	D10K: D10K: Other PT Losses	9.35	8.62	8.62	10.15	10.15	8.78	9.50
134	0	D10K: D10K: Other PT Losses	9.35	8.62	8.62	10.15	10.15	8.78	9.50
134	1	D10K: D10K: Other PT Losses	9.34	8.58	8.58	10.17	10.17	8.75	9.49
134	2	D10K: D10K: Other PT Losses	9.41	8.67	8.67	10.22	10.22	8.83	9.56
135	0	D10K: D10K: Other PT Losses	9.41	8.67	8.67	10.22	10.22	8.83	9.56
135	1	D10K: D10K: Other PT Losses	9.48	8.83	8.83	10.18	10.18	8.98	9.61
135	2	D10K: D10K: Other PT Losses	2.29	-2.80	-2.80	7.87	7.87	-1.67	3.33
137	0	D10K: D10K: Other PT Losses	7.39	-1.43	-1.43	17.07	17.07	0.53	9.20
137	1	D10K: D10K: Other PT Losses	17.12	14.74	14.74	19.74	19.74	15.27	17.61
137	2	D10K: D10K: Other PT Losses	17.01	14.95	14.95	19.28	19.28	15.41	17.44
138	0	D10K: D10K: Other PT Losses	17.01	14.95	14.95	19.28	19.28	15.41	17.44
138	1	D10K: D10K: Other PT Losses	16.90	15.78	15.78	18.12	18.12	16.03	17.13
138	2	D10K: D10K: Other PT Losses	16.89	16.80	16.80	17.00	17.00	16.82	16.91
139	0	D10K: D10K: Other PT Losses	16.89	16.80	16.80	17.00	17.00	16.82	16.91
139	1	D10K: D10K: Other PT Losses	16.89	18.04	18.04	15.62	15.62	17.78	16.65
139	2	D10K: D10K: Other PT Losses	16.99	19.47	19.47	14.26	14.26	18.92	16.48

MEMBER STRESSES

DECK & CANOPY MEMBERS
D10K

(-) compression

			OTHER PT LOSSES (PS)						
Member	Station	Result Case	(P/A) @ Centroid (kips/ft²)	Normal Stress @ Point 1 (kips/ft²)	Normal Stress @ Point 2 (kips/ft²)	Normal Stress @ Point 3 (kips/ft²)	Normal Stress @ Point 4 (kips/ft²)	Normal Stress @ Point 5 (kips/ft²)	Normal Stress @ Point 6 (kips/ft²)
140	0	D10K: D10K: Other PT Losses	16.99	19.47	19.47	14.26	14.26	18.92	16.48
140	1	D10K: D10K: Other PT Losses	17.09	19.82	19.82	14.09	14.09	19.21	16.53
140	2	D10K: D10K: Other PT Losses	7.40	4.29	4.29	10.81	10.81	4.98	8.04
142	0	D10K: D10K: Other PT Losses	8.79	-0.03	-0.03	18.48	18.48	1.94	10.61
142	1	D10K: D10K: Other PT Losses	19.02	17.09	17.09	21.15	21.15	17.52	19.42
142	2	D10K: D10K: Other PT Losses	18.92	17.48	17.48	20.50	20.50	17.80	19.22
143	0	D10K: D10K: Other PT Losses	18.92	17.48	17.48	20.50	20.50	17.80	19.22
143	1	D10K: D10K: Other PT Losses	18.81	18.29	18.29	19.39	19.39	18.41	18.92
143	2	D10K: D10K: Other PT Losses	18.81	19.28	19.28	18.30	18.30	19.18	18.72
144	0	D10K: D10K: Other PT Losses	18.81	19.28	19.28	18.30	18.30	19.18	18.72
144	1	D10K: D10K: Other PT Losses	18.81	20.56	20.56	16.90	16.90	20.17	18.46
144	2	D10K: D10K: Other PT Losses	18.91	22.01	22.01	15.52	15.52	21.32	18.28
145	0	D10K: D10K: Other PT Losses	18.92	22.01	22.01	15.52	15.52	21.32	18.28
145	1	D10K: D10K: Other PT Losses	19.02	22.33	22.33	15.38	15.38	21.59	18.33
145	2	D10K: D10K: Other PT Losses	8.80	5.96	5.96	11.92	11.92	6.59	9.39
147	0	D10K: D10K: Other PT Losses	9.87	0.92	0.91	19.70	19.70	2.91	11.71
147	1	D10K: D10K: Other PT Losses	20.41	18.66	18.66	22.34	22.34	19.05	20.77
147	2	D10K: D10K: Other PT Losses	20.31	19.22	19.22	21.50	21.50	19.46	20.53
148	0	D10K: D10K: Other PT Losses	20.31	19.22	19.22	21.50	21.50	19.46	20.53
148	1	D10K: D10K: Other PT Losses	20.20	20.19	20.19	20.21	20.21	20.19	20.20
148	2	D10K: D10K: Other PT Losses	20.20	21.33	21.33	18.95	18.95	21.08	19.96
149	0	D10K: D10K: Other PT Losses	20.20	21.33	21.33	18.95	18.95	21.08	19.96
149	1	D10K: D10K: Other PT Losses	20.19	22.79	22.79	17.34	17.34	22.21	19.66
149	2	D10K: D10K: Other PT Losses	20.29	24.42	24.42	15.75	15.75	23.50	19.44
150	0	D10K: D10K: Other PT Losses	20.29	24.42	24.42	15.75	15.75	23.50	19.44
150	1	D10K: D10K: Other PT Losses	20.39	24.81	24.81	15.53	15.53	23.82	19.48
150	2	D10K: D10K: Other PT Losses	9.86	8.05	8.05	11.86	11.86	8.45	10.24
152	0	D10K: D10K: Other PT Losses	10.48	3.67	3.67	17.96	17.96	5.19	11.88
152	1	D10K: D10K: Other PT Losses	21.04	20.93	20.93	21.16	21.16	20.95	21.06
152	2	D10K: D10K: Other PT Losses	20.92	21.01	21.01	20.83	20.83	20.99	20.91
153	0	D10K: D10K: Other PT Losses	20.92	21.01	21.01	20.83	20.83	20.99	20.91
153	1	D10K: D10K: Other PT Losses	20.81	21.10	21.09	20.50	20.50	21.03	20.75
153	2	D10K: D10K: Other PT Losses	20.80	21.35	21.35	20.20	20.20	21.23	20.69
154	0	D10K: D10K: Other PT Losses	20.80	21.35	21.35	20.20	20.20	21.23	20.69
154	1	D10K: D10K: Other PT Losses	20.79	21.87	21.87	19.62	19.62	21.63	20.57
154	2	D10K: D10K: Other PT Losses	20.89	22.57	22.57	19.06	19.06	22.20	20.55
155	0	D10K: D10K: Other PT Losses	20.89	22.57	22.57	19.06	19.06	22.20	20.55
155	1	D10K: D10K: Other PT Losses	20.99	22.68	22.68	19.14	19.14	22.31	20.65
155	2	D10K: D10K: Other PT Losses	10.46	5.68	5.68	15.71	15.71	6.75	11.45
157	0	D10K: D10K: Other PT Losses	10.49	0.50	0.50	21.46	21.46	2.73	12.55
157	1	D10K: D10K: Other PT Losses	20.59	16.87	16.87	24.68	24.68	17.70	21.36
157	2	D10K: D10K: Other PT Losses	20.27	17.48	17.48	23.34	23.34	18.10	20.85
158	0	D10K: D10K: Other PT Losses	20.27	17.48	17.48	23.34	23.34	18.10	20.85
158	1	D10K: D10K: Other PT Losses	20.05	22.32	22.32	17.55	17.55	21.82	19.58
158	2	D10K: D10K: Other PT Losses	19.91	27.24	27.24	11.86	11.86	25.61	18.40
159	0	D10K: D10K: Other PT Losses	19.91	27.24	27.24	11.86	11.86	25.61	18.40
159	1	D10K: D10K: Other PT Losses	19.91	28.36	28.36	10.63	10.63	26.48	18.17
159	2	D10K: D10K: Other PT Losses	19.70	27.31	27.31	11.34	11.34	25.61	18.13

MEMBER STRESSES

DECK & CANOPY MEMBERS
D10K

(-) compression

			UTILITIES (DW)						
Member	Station	Result Case	(P/A) @ Centroid (kips/ft²)	Normal Stress @ Point 1 (kips/ft²)	Normal Stress @ Point 2 (kips/ft²)	Normal Stress @ Point 3 (kips/ft²)	Normal Stress @ Point 4 (kips/ft²)	Normal Stress @ Point 5 (kips/ft²)	Normal Stress @ Point 6 (kips/ft²)
1	0	D10K: D10K: Other PT Losses	0.00	0.00	0.00	0.00	0.00	0.00	0.00
1	1	D10K: D10K: Other PT Losses	0.00	0.00	0.00	0.00	0.00	0.00	0.00
1	2	D10K: D10K: Other PT Losses	0.00	0.00	0.00	0.00	0.00	0.00	0.00
2	0	D10K: D10K: Other PT Losses	-0.03	0.20	0.20	0.01	0.01	0.13	-0.37
2	1	D10K: D10K: Other PT Losses	-0.03	-1.19	-1.19	-0.20	-0.20	-0.83	1.72
2	2	D10K: D10K: Other PT Losses	-0.03	-2.57	-2.57	-0.40	-0.40	-1.79	3.79
3	0	D10K: D10K: Other PT Losses	1.62	0.72	0.72	1.49	1.49	0.99	2.99
3	1	D10K: D10K: Other PT Losses	1.62	-0.93	-0.94	1.25	1.25	-0.16	5.47
3	2	D10K: D10K: Other PT Losses	1.62	-2.18	-2.18	1.07	1.07	-1.02	7.34
4	0	D10K: D10K: Other PT Losses	1.62	-2.18	-2.18	1.07	1.07	-1.02	7.34
4	1	D10K: D10K: Other PT Losses	1.62	-3.48	-3.49	0.88	0.88	-1.93	9.31
4	2	D10K: D10K: Other PT Losses	1.63	-2.93	-2.93	0.96	0.96	-1.55	8.48
5	0	D10K: D10K: Other PT Losses	1.63	-2.93	-2.93	0.96	0.96	-1.55	8.48
5	1	D10K: D10K: Other PT Losses	1.63	-0.52	-0.53	1.31	1.31	0.13	4.86
5	2	D10K: D10K: Other PT Losses	1.63	3.74	3.74	1.93	1.94	3.10	-1.55
6	0	D10K: D10K: Other PT Losses	1.63	3.74	3.74	1.93	1.94	3.10	-1.55
6	1	D10K: D10K: Other PT Losses	1.63	4.45	4.45	2.04	2.04	3.59	-2.62
6	2	D10K: D10K: Other PT Losses	1.63	5.20	5.19	2.15	2.15	4.11	-3.73
7	0	D10K: D10K: Other PT Losses	1.41	5.51	5.51	2.01	2.01	4.26	-4.76
7	1	D10K: D10K: Other PT Losses	1.41	5.02	5.02	1.93	1.94	3.92	-4.02
7	2	D10K: D10K: Other PT Losses	1.41	4.54	4.53	1.86	1.87	3.59	-3.29
8	0	D10K: D10K: Other PT Losses	1.74	5.04	5.04	2.22	2.22	4.04	-3.23
8	1	D10K: D10K: Other PT Losses	1.74	3.09	3.08	1.93	1.94	2.68	-0.29
8	2	D10K: D10K: Other PT Losses	1.74	1.47	1.46	1.69	1.70	1.55	2.15
9	0	D10K: D10K: Other PT Losses	1.74	1.47	1.46	1.69	1.70	1.55	2.15
9	1	D10K: D10K: Other PT Losses	1.74	-1.13	-1.14	1.31	1.32	-0.26	6.05
9	2	D10K: D10K: Other PT Losses	1.74	-1.63	-1.64	1.24	1.25	-0.61	6.81
10	0	D10K: D10K: Other PT Losses	1.74	-1.63	-1.64	1.24	1.25	-0.61	6.81
10	1	D10K: D10K: Other PT Losses	1.74	-0.03	-0.04	1.48	1.48	0.50	4.41
10	2	D10K: D10K: Other PT Losses	1.74	3.67	3.66	2.02	2.03	3.08	-1.15
11	0	D10K: D10K: Other PT Losses	1.74	3.67	3.66	2.02	2.03	3.08	-1.15
11	1	D10K: D10K: Other PT Losses	1.74	4.32	4.32	2.11	2.12	3.54	-2.14
11	2	D10K: D10K: Other PT Losses	1.74	5.02	5.01	2.22	2.22	4.02	-3.18
12	0	D10K: D10K: Other PT Losses	1.73	4.98	4.97	2.20	2.21	3.99	-3.14
12	1	D10K: D10K: Other PT Losses	1.73	4.93	4.92	2.19	2.20	3.95	-3.06
12	2	D10K: D10K: Other PT Losses	1.73	4.89	4.88	2.19	2.20	3.92	-3.00
13	0	D10K: D10K: Other PT Losses	1.36	4.67	4.66	1.84	1.85	3.66	-3.62
13	1	D10K: D10K: Other PT Losses	1.36	2.96	2.95	1.59	1.60	2.47	-1.04
13	2	D10K: D10K: Other PT Losses	1.36	1.49	1.48	1.37	1.38	1.45	1.16
14	0	D10K: D10K: Other PT Losses	1.36	1.49	1.48	1.37	1.38	1.45	1.16
14	1	D10K: D10K: Other PT Losses	1.36	-1.47	-1.48	0.94	0.95	-0.61	5.62
14	2	D10K: D10K: Other PT Losses	1.36	-1.92	-1.93	0.87	0.89	-0.92	6.30
15	0	D10K: D10K: Other PT Losses	1.36	-1.92	-1.93	0.87	0.89	-0.92	6.30
15	1	D10K: D10K: Other PT Losses	1.36	0.15	0.13	1.18	1.19	0.51	3.20
15	2	D10K: D10K: Other PT Losses	1.36	4.72	4.70	1.84	1.86	3.69	-3.67
16	0	D10K: D10K: Other PT Losses	1.36	4.72	4.70	1.84	1.86	3.69	-3.67
16	1	D10K: D10K: Other PT Losses	1.36	5.41	5.40	1.95	1.96	4.18	-4.71
16	2	D10K: D10K: Other PT Losses	1.36	6.14	6.13	2.05	2.07	4.68	-5.81

MEMBER STRESSES

DECK & CANOPY MEMBERS
D10K

(-) compression

			UTILITIES (DW)						
Member	Station	Result Case	(P/A) @ Centroid (kips/ft²)	Normal Stress @ Point 1 (kips/ft²)	Normal Stress @ Point 2 (kips/ft²)	Normal Stress @ Point 3 (kips/ft²)	Normal Stress @ Point 4 (kips/ft²)	Normal Stress @ Point 5 (kips/ft²)	Normal Stress @ Point 6 (kips/ft²)
17	0	D10K: D10K: Other PT Losses	1.33	5.53	5.52	1.94	1.95	4.25	-4.98
17	1	D10K: D10K: Other PT Losses	1.33	5.89	5.88	1.99	2.00	4.50	-5.52
17	2	D10K: D10K: Other PT Losses	1.33	6.26	6.25	2.04	2.06	4.76	-6.07
18	0	D10K: D10K: Other PT Losses	0.52	5.54	5.52	1.24	1.26	4.01	-7.02
18	1	D10K: D10K: Other PT Losses	0.52	3.95	3.93	1.01	1.03	2.90	-4.62
18	2	D10K: D10K: Other PT Losses	0.52	2.52	2.50	0.80	0.82	1.90	-2.48
19	0	D10K: D10K: Other PT Losses	0.52	2.52	2.50	0.80	0.82	1.90	-2.48
19	1	D10K: D10K: Other PT Losses	0.52	-1.75	-1.77	0.18	0.19	-1.07	3.95
19	2	D10K: D10K: Other PT Losses	0.52	-3.06	-3.08	-0.01	0.00	-1.98	5.92
20	0	D10K: D10K: Other PT Losses	0.52	-3.06	-3.08	-0.01	0.00	-1.98	5.92
20	1	D10K: D10K: Other PT Losses	0.52	-1.42	-1.43	0.23	0.25	-0.83	3.45
20	2	D10K: D10K: Other PT Losses	0.52	3.19	3.17	0.90	0.92	2.37	-3.48
21	0	D10K: D10K: Other PT Losses	0.52	3.19	3.17	0.90	0.92	2.37	-3.48
21	1	D10K: D10K: Other PT Losses	0.52	4.31	4.29	1.07	1.09	3.15	-5.16
21	2	D10K: D10K: Other PT Losses	0.52	5.52	5.50	1.24	1.26	4.00	-6.98
22	0	D10K: D10K: Other PT Losses	0.19	4.66	4.64	0.83	0.85	3.30	-6.53
22	1	D10K: D10K: Other PT Losses	0.19	5.39	5.37	0.94	0.96	3.80	-7.63
22	2	D10K: D10K: Other PT Losses	0.19	6.13	6.11	1.04	1.06	4.32	-8.73
23	0	D10K: D10K: Other PT Losses	-0.57	5.17	5.15	0.25	0.27	3.41	-9.19
23	1	D10K: D10K: Other PT Losses	-0.57	4.04	4.02	0.09	0.11	2.63	-7.49
23	2	D10K: D10K: Other PT Losses	-0.57	2.99	2.97	-0.06	-0.04	1.90	-5.91
24	0	D10K: D10K: Other PT Losses	-0.57	2.99	2.97	-0.06	-0.04	1.90	-5.91
24	1	D10K: D10K: Other PT Losses	-0.57	-2.09	-2.11	-0.81	-0.78	-1.64	1.73
24	2	D10K: D10K: Other PT Losses	-0.57	-3.79	-3.81	-1.05	-1.03	-2.82	4.28
25	0	D10K: D10K: Other PT Losses	-0.57	-3.79	-3.81	-1.05	-1.03	-2.82	4.28
25	1	D10K: D10K: Other PT Losses	-0.57	-2.09	-2.11	-0.80	-0.78	-1.63	1.73
25	2	D10K: D10K: Other PT Losses	-0.57	3.01	2.98	-0.06	-0.03	1.91	-5.92
26	0	D10K: D10K: Other PT Losses	-0.57	3.01	2.98	-0.06	-0.03	1.91	-5.92
26	1	D10K: D10K: Other PT Losses	-0.57	4.86	4.84	0.21	0.24	3.20	-8.71
26	2	D10K: D10K: Other PT Losses	-0.57	6.94	6.91	0.52	0.54	4.65	-11.83
29	0	D10K: D10K: Other PT Losses	-1.31	4.87	4.87	-0.41	-0.41	2.99	-10.61
29	1	D10K: D10K: Other PT Losses	-1.31	2.83	2.83	-0.71	-0.71	1.57	-7.54
29	2	D10K: D10K: Other PT Losses	-1.31	1.01	1.01	-0.97	-0.97	0.30	-4.80
30	0	D10K: D10K: Other PT Losses	-1.31	1.01	1.01	-0.97	-0.97	0.30	-4.80
30	1	D10K: D10K: Other PT Losses	-1.31	-3.90	-3.90	-1.69	-1.69	-3.11	2.57
30	2	D10K: D10K: Other PT Losses	-1.31	-5.41	-5.41	-1.91	-1.91	-4.16	4.85
31	0	D10K: D10K: Other PT Losses	-1.31	-5.41	-5.41	-1.91	-1.91	-4.16	4.85
31	1	D10K: D10K: Other PT Losses	-1.31	-3.52	-3.52	-1.63	-1.63	-2.85	2.02
31	2	D10K: D10K: Other PT Losses	-1.31	1.76	1.76	-0.86	-0.86	0.83	-5.91
32	0	D10K: D10K: Other PT Losses	-1.31	1.76	1.76	-0.86	-0.86	0.83	-5.91
32	1	D10K: D10K: Other PT Losses	-1.31	2.82	2.82	-0.70	-0.70	1.56	-7.51
32	2	D10K: D10K: Other PT Losses	-1.31	3.95	3.95	-0.54	-0.54	2.35	-9.21
33	0	D10K: D10K: Other PT Losses	-1.01	3.95	3.95	-0.28	-0.28	2.44	-8.46
33	1	D10K: D10K: Other PT Losses	-1.01	3.90	3.90	-0.29	-0.29	2.41	-8.39
33	2	D10K: D10K: Other PT Losses	-1.01	3.86	3.86	-0.30	-0.30	2.38	-8.33
34	0	D10K: D10K: Other PT Losses	-1.01	3.70	3.70	-0.32	-0.32	2.27	-8.08
34	1	D10K: D10K: Other PT Losses	-1.01	3.15	3.15	-0.40	-0.40	1.89	-7.26
34	2	D10K: D10K: Other PT Losses	-1.01	2.64	2.65	-0.47	-0.47	1.53	-6.50

MEMBER STRESSES

DECK & CANOPY MEMBERS
D10K

(-) compression

			UTILITIES (DW)						
Member	Station	Result Case	(P/A) @ Centroid (kips/ft²)	Normal Stress @ Point 1 (kips/ft²)	Normal Stress @ Point 2 (kips/ft²)	Normal Stress @ Point 3 (kips/ft²)	Normal Stress @ Point 4 (kips/ft²)	Normal Stress @ Point 5 (kips/ft²)	Normal Stress @ Point 6 (kips/ft²)
35	0	D10K: D10K: Other PT Losses	-1.01	2.64	2.65	-0.47	-0.47	1.53	-6.50
35	1	D10K: D10K: Other PT Losses	-1.01	1.31	1.31	-0.67	-0.67	0.61	-4.50
35	2	D10K: D10K: Other PT Losses	-1.01	0.34	0.34	-0.81	-0.81	-0.07	-3.04
36	0	D10K: D10K: Other PT Losses	-1.01	0.34	0.34	-0.81	-0.81	-0.07	-3.04
36	1	D10K: D10K: Other PT Losses	-1.01	-0.27	-0.27	-0.90	-0.90	-0.49	-2.11
36	2	D10K: D10K: Other PT Losses	-1.01	-0.52	-0.52	-0.94	-0.94	-0.67	-1.73
37	0	D10K: D10K: Other PT Losses	-1.01	-0.52	-0.52	-0.94	-0.94	-0.67	-1.73
37	1	D10K: D10K: Other PT Losses	-1.01	-0.51	-0.51	-0.93	-0.93	-0.66	-1.75
37	2	D10K: D10K: Other PT Losses	-1.01	-0.41	-0.41	-0.92	-0.92	-0.59	-1.91
38	0	D10K: D10K: Other PT Losses	-0.82	-0.02	-0.02	-0.70	-0.70	-0.26	-2.02
38	1	D10K: D10K: Other PT Losses	-0.82	-0.10	-0.10	-0.71	-0.71	-0.31	-1.90
38	2	D10K: D10K: Other PT Losses	-0.82	-0.17	-0.17	-0.72	-0.72	-0.37	-1.78
39	0	D10K: D10K: Other PT Losses	-0.81	0.20	0.20	-0.66	-0.66	-0.11	-2.33
39	1	D10K: D10K: Other PT Losses	-0.81	-0.10	-0.10	-0.71	-0.71	-0.31	-1.89
39	2	D10K: D10K: Other PT Losses	-0.81	-0.36	-0.36	-0.74	-0.74	-0.49	-1.49
40	0	D10K: D10K: Other PT Losses	-0.81	-0.36	-0.36	-0.74	-0.74	-0.49	-1.49
40	1	D10K: D10K: Other PT Losses	-0.81	-0.94	-0.93	-0.83	-0.83	-0.90	-0.62
40	2	D10K: D10K: Other PT Losses	-0.81	-1.22	-1.22	-0.87	-0.87	-1.09	-0.20
41	0	D10K: D10K: Other PT Losses	-0.81	-1.22	-1.22	-0.87	-0.87	-1.09	-0.20
41	1	D10K: D10K: Other PT Losses	-0.81	-1.20	-1.20	-0.87	-0.87	-1.08	-0.22
41	2	D10K: D10K: Other PT Losses	-0.81	-0.89	-0.89	-0.82	-0.82	-0.86	-0.69
42	0	D10K: D10K: Other PT Losses	-0.81	-0.89	-0.89	-0.82	-0.82	-0.86	-0.69
42	1	D10K: D10K: Other PT Losses	-0.81	-0.54	-0.54	-0.77	-0.77	-0.62	-1.21
42	2	D10K: D10K: Other PT Losses	-0.81	-0.08	-0.08	-0.70	-0.70	-0.30	-1.90
43	0	D10K: D10K: Other PT Losses	-0.53	0.32	0.32	-0.41	-0.41	0.06	-1.81
43	1	D10K: D10K: Other PT Losses	-0.53	0.24	0.24	-0.42	-0.42	0.01	-1.69
43	2	D10K: D10K: Other PT Losses	-0.53	0.17	0.17	-0.43	-0.43	-0.05	-1.58
44	0	D10K: D10K: Other PT Losses	-0.52	0.55	0.55	-0.37	-0.37	0.22	-2.14
44	1	D10K: D10K: Other PT Losses	-0.52	0.23	0.23	-0.41	-0.41	0.00	-1.66
44	2	D10K: D10K: Other PT Losses	-0.52	-0.05	-0.05	-0.45	-0.45	-0.20	-1.23
45	0	D10K: D10K: Other PT Losses	-0.52	-0.05	-0.05	-0.45	-0.45	-0.20	-1.23
45	1	D10K: D10K: Other PT Losses	-0.52	-0.68	-0.68	-0.55	-0.55	-0.63	-0.29
45	2	D10K: D10K: Other PT Losses	-0.52	-1.05	-1.05	-0.60	-0.60	-0.89	0.27
46	0	D10K: D10K: Other PT Losses	-0.52	-1.05	-1.05	-0.60	-0.60	-0.89	0.27
46	1	D10K: D10K: Other PT Losses	-0.52	-1.16	-1.16	-0.61	-0.61	-0.96	0.43
46	2	D10K: D10K: Other PT Losses	-0.52	-1.01	-1.01	-0.59	-0.59	-0.86	0.21
47	0	D10K: D10K: Other PT Losses	-0.52	-1.01	-1.01	-0.59	-0.59	-0.86	0.21
47	1	D10K: D10K: Other PT Losses	-0.52	-0.75	-0.75	-0.55	-0.55	-0.68	-0.18
47	2	D10K: D10K: Other PT Losses	-0.52	-0.36	-0.36	-0.50	-0.50	-0.41	-0.77
48	0	D10K: D10K: Other PT Losses	-0.29	-0.02	-0.02	-0.25	-0.25	-0.10	-0.69
48	1	D10K: D10K: Other PT Losses	-0.29	-0.07	-0.07	-0.25	-0.25	-0.14	-0.61
48	2	D10K: D10K: Other PT Losses	-0.29	-0.13	-0.13	-0.26	-0.26	-0.17	-0.53
49	0	D10K: D10K: Other PT Losses	-0.31	0.14	0.14	-0.24	-0.24	0.01	-0.99
49	1	D10K: D10K: Other PT Losses	-0.31	0.11	0.11	-0.25	-0.25	-0.02	-0.94
49	2	D10K: D10K: Other PT Losses	-0.31	0.10	0.10	-0.25	-0.25	-0.02	-0.93
50	0	D10K: D10K: Other PT Losses	-0.31	0.10	0.10	-0.25	-0.25	-0.02	-0.93
50	1	D10K: D10K: Other PT Losses	-0.31	0.25	0.25	-0.23	-0.23	0.08	-1.16
50	2	D10K: D10K: Other PT Losses	-0.31	0.63	0.63	-0.17	-0.17	0.35	-1.72

MEMBER STRESSES

DECK & CANOPY MEMBERS
D10K

(-) compression

			UTILITIES (DW)						
Member	Station	Result Case	(P/A) @ Centroid (kips/ft²)	Normal Stress @ Point 1 (kips/ft²)	Normal Stress @ Point 2 (kips/ft²)	Normal Stress @ Point 3 (kips/ft²)	Normal Stress @ Point 4 (kips/ft²)	Normal Stress @ Point 5 (kips/ft²)	Normal Stress @ Point 6 (kips/ft²)
51	0	D10K: D10K: Other PT Losses	-0.31	0.63	0.63	-0.17	-0.17	0.35	-1.72
51	1	D10K: D10K: Other PT Losses	-0.31	1.24	1.24	-0.08	-0.08	0.77	-2.63
51	2	D10K: D10K: Other PT Losses	-0.31	2.07	2.07	0.04	0.04	1.35	-3.89
52	0	D10K: D10K: Other PT Losses	-0.31	2.07	2.07	0.04	0.04	1.35	-3.89
52	1	D10K: D10K: Other PT Losses	-0.31	2.90	2.90	0.16	0.16	1.92	-5.13
52	2	D10K: D10K: Other PT Losses	-0.31	3.87	3.87	0.30	0.30	2.60	-6.58
60	0	D10K: D10K: Other PT Losses	0.00	0.00	0.00	0.00	0.00	0.00	0.00
60	1	D10K: D10K: Other PT Losses	0.00	0.00	0.00	0.00	0.00	0.00	0.00
60	2	D10K: D10K: Other PT Losses	0.00	0.00	0.00	0.00	0.00	0.00	0.00
101	0	D10K: D10K: Other PT Losses	0.00	0.00	0.00	0.00	0.00	0.00	0.00
101	1	D10K: D10K: Other PT Losses	0.00	0.00	0.00	0.00	0.00	0.00	0.00
101	2	D10K: D10K: Other PT Losses	0.00	0.00	0.00	0.00	0.00	0.00	0.00
102	0	D10K: D10K: Other PT Losses	0.00	0.00	0.00	0.00	0.00	0.00	0.00
102	1	D10K: D10K: Other PT Losses	0.00	0.00	0.00	0.00	0.00	0.00	0.00
102	2	D10K: D10K: Other PT Losses	0.00	0.00	0.00	0.00	0.00	0.00	0.00
103	0	D10K: D10K: Other PT Losses	0.00	0.00	0.00	0.00	0.00	0.00	0.00
103	1	D10K: D10K: Other PT Losses	0.00	0.00	0.00	0.00	0.00	0.00	0.00
103	2	D10K: D10K: Other PT Losses	0.00	0.00	0.00	0.00	0.00	0.00	0.00
104	0	D10K: D10K: Other PT Losses	0.00	0.00	0.00	0.00	0.00	0.00	0.00
104	1	D10K: D10K: Other PT Losses	0.00	0.00	0.00	0.00	0.00	0.00	0.00
104	2	D10K: D10K: Other PT Losses	0.00	0.00	0.00	0.00	0.00	0.00	0.00
106	0	D10K: D10K: Other PT Losses	-4.05	0.98	0.98	-9.58	-9.58	-0.14	-5.09
106	1	D10K: D10K: Other PT Losses	-4.05	0.64	0.64	-9.20	-9.20	-0.41	-5.02
106	2	D10K: D10K: Other PT Losses	-4.05	0.29	0.29	-8.83	-8.83	-0.68	-4.95
107	0	D10K: D10K: Other PT Losses	-4.05	0.29	0.29	-8.83	-8.83	-0.68	-4.95
107	1	D10K: D10K: Other PT Losses	-4.05	-1.77	-1.77	-6.56	-6.56	-2.28	-4.52
107	2	D10K: D10K: Other PT Losses	-4.05	-3.84	-3.84	-4.29	-4.29	-3.89	-4.10
108	0	D10K: D10K: Other PT Losses	-4.05	-3.84	-3.84	-4.29	-4.29	-3.89	-4.10
108	1	D10K: D10K: Other PT Losses	-4.05	-5.79	-5.79	-2.14	-2.14	-5.41	-3.70
108	2	D10K: D10K: Other PT Losses	-4.05	-7.75	-7.75	0.00	0.00	-6.92	-3.29
109	0	D10K: D10K: Other PT Losses	-4.05	-7.75	-7.75	0.00	0.00	-6.92	-3.29
109	1	D10K: D10K: Other PT Losses	-4.05	-8.46	-8.46	0.78	0.79	-7.48	-3.15
109	2	D10K: D10K: Other PT Losses	-4.05	-9.17	-9.18	1.57	1.57	-8.03	-3.00
111	0	D10K: D10K: Other PT Losses	-5.55	-8.15	-8.15	-2.69	-2.69	-7.57	-5.01
111	1	D10K: D10K: Other PT Losses	-5.55	-8.02	-8.02	-2.83	-2.83	-7.47	-5.04
111	2	D10K: D10K: Other PT Losses	-5.55	-7.89	-7.89	-2.97	-2.97	-7.37	-5.06
112	0	D10K: D10K: Other PT Losses	-5.55	-7.89	-7.89	-2.97	-2.97	-7.37	-5.06
112	1	D10K: D10K: Other PT Losses	-5.55	-7.32	-7.32	-3.61	-3.61	-6.92	-5.18
112	2	D10K: D10K: Other PT Losses	-5.55	-6.74	-6.74	-4.24	-4.24	-6.47	-5.30
113	0	D10K: D10K: Other PT Losses	-5.55	-6.74	-6.74	-4.24	-4.24	-6.47	-5.30
113	1	D10K: D10K: Other PT Losses	-5.55	-6.12	-6.12	-4.92	-4.92	-5.99	-5.43
113	2	D10K: D10K: Other PT Losses	-5.55	-5.51	-5.51	-5.59	-5.59	-5.52	-5.56
114	0	D10K: D10K: Other PT Losses	-5.55	-5.51	-5.51	-5.59	-5.59	-5.52	-5.56
114	1	D10K: D10K: Other PT Losses	-5.55	-5.36	-5.36	-5.75	-5.75	-5.40	-5.59
114	2	D10K: D10K: Other PT Losses	-5.55	-5.22	-5.22	-5.91	-5.91	-5.29	-5.62
116	0	D10K: D10K: Other PT Losses	-5.29	-7.59	-7.60	-2.75	-2.75	-7.08	-4.81
116	1	D10K: D10K: Other PT Losses	-5.29	-7.45	-7.45	-2.91	-2.91	-6.97	-4.84
116	2	D10K: D10K: Other PT Losses	-5.29	-7.31	-7.31	-3.06	-3.06	-6.86	-4.87

MEMBER STRESSES

DECK & CANOPY MEMBERS
D10K

(-) compression

			UTILITIES (DW)						
Member	Station	Result Case	(P/A) @ Centroid (kips/ft²)	Normal Stress @ Point 1 (kips/ft²)	Normal Stress @ Point 2 (kips/ft²)	Normal Stress @ Point 3 (kips/ft²)	Normal Stress @ Point 4 (kips/ft²)	Normal Stress @ Point 5 (kips/ft²)	Normal Stress @ Point 6 (kips/ft²)
117	0	D10K: D10K: Other PT Losses	-5.29	-7.31	-7.31	-3.06	-3.06	-6.86	-4.87
117	1	D10K: D10K: Other PT Losses	-5.29	-6.48	-6.49	-3.97	-3.97	-6.22	-5.04
117	2	D10K: D10K: Other PT Losses	-5.29	-5.66	-5.66	-4.88	-4.87	-5.58	-5.21
118	0	D10K: D10K: Other PT Losses	-5.29	-5.66	-5.66	-4.88	-4.87	-5.58	-5.21
118	1	D10K: D10K: Other PT Losses	-5.29	-4.81	-4.81	-5.81	-5.81	-4.92	-5.38
118	2	D10K: D10K: Other PT Losses	-5.29	-3.96	-3.96	-6.74	-6.74	-4.25	-5.56
119	0	D10K: D10K: Other PT Losses	-5.29	-3.96	-3.96	-6.74	-6.74	-4.25	-5.56
119	1	D10K: D10K: Other PT Losses	-5.29	-3.80	-3.80	-6.92	-6.91	-4.13	-5.59
119	2	D10K: D10K: Other PT Losses	-5.29	-3.64	-3.65	-7.09	-7.09	-4.01	-5.62
121	0	D10K: D10K: Other PT Losses	-3.06	-5.09	-5.10	-0.83	-0.82	-4.64	-2.64
121	1	D10K: D10K: Other PT Losses	-3.06	-4.98	-4.98	-0.95	-0.95	-4.55	-2.66
121	2	D10K: D10K: Other PT Losses	-3.06	-4.87	-4.87	-1.07	-1.07	-4.47	-2.69
122	0	D10K: D10K: Other PT Losses	-3.06	-4.87	-4.87	-1.07	-1.07	-4.47	-2.69
122	1	D10K: D10K: Other PT Losses	-3.06	-4.03	-4.03	-1.99	-1.99	-3.82	-2.86
122	2	D10K: D10K: Other PT Losses	-3.06	-3.19	-3.19	-2.91	-2.91	-3.16	-3.03
123	0	D10K: D10K: Other PT Losses	-3.06	-3.19	-3.19	-2.91	-2.91	-3.16	-3.03
123	1	D10K: D10K: Other PT Losses	-3.06	-2.35	-2.35	-3.84	-3.83	-2.51	-3.20
123	2	D10K: D10K: Other PT Losses	-3.06	-1.51	-1.51	-4.76	-4.76	-1.86	-3.38
124	0	D10K: D10K: Other PT Losses	-3.06	-1.51	-1.51	-4.76	-4.76	-1.86	-3.38
124	1	D10K: D10K: Other PT Losses	-3.06	-1.41	-1.42	-4.86	-4.86	-1.78	-3.40
124	2	D10K: D10K: Other PT Losses	-3.06	-1.32	-1.32	-4.97	-4.97	-1.71	-3.42
126	0	D10K: D10K: Other PT Losses	0.75	-2.88	-2.88	4.74	4.74	-2.07	1.50
126	1	D10K: D10K: Other PT Losses	0.75	-2.47	-2.47	4.29	4.29	-1.75	1.41
126	2	D10K: D10K: Other PT Losses	0.75	-2.06	-2.06	3.84	3.84	-1.43	1.33
127	0	D10K: D10K: Other PT Losses	0.75	-2.06	-2.06	3.84	3.84	-1.43	1.33
127	1	D10K: D10K: Other PT Losses	0.75	-0.54	-0.54	2.17	2.17	-0.25	1.02
127	2	D10K: D10K: Other PT Losses	0.75	0.98	0.97	0.51	0.51	0.93	0.71
128	0	D10K: D10K: Other PT Losses	0.75	0.98	0.97	0.51	0.51	0.93	0.71
128	1	D10K: D10K: Other PT Losses	0.75	2.51	2.51	-1.18	-1.18	2.12	0.39
133	0	D10K: D10K: Other PT Losses	1.06	2.35	2.35	-0.35	-0.35	2.06	0.80
133	1	D10K: D10K: Other PT Losses	1.06	2.03	2.03	0.00	0.00	1.81	0.86
133	2	D10K: D10K: Other PT Losses	1.06	1.71	1.71	0.35	0.35	1.57	0.93
134	0	D10K: D10K: Other PT Losses	1.06	1.71	1.71	0.35	0.35	1.57	0.93
134	1	D10K: D10K: Other PT Losses	1.06	1.39	1.39	0.70	0.70	1.32	0.99
134	2	D10K: D10K: Other PT Losses	1.06	1.08	1.08	1.05	1.05	1.07	1.06
135	0	D10K: D10K: Other PT Losses	1.06	1.08	1.08	1.05	1.05	1.07	1.06
135	1	D10K: D10K: Other PT Losses	1.06	0.99	1.00	1.13	1.13	1.01	1.08
135	2	D10K: D10K: Other PT Losses	1.06	0.91	0.91	1.22	1.22	0.95	1.09
137	0	D10K: D10K: Other PT Losses	0.35	1.78	1.78	-1.22	-1.22	1.46	0.06
137	1	D10K: D10K: Other PT Losses	0.35	1.63	1.63	-1.05	-1.06	1.34	0.09
137	2	D10K: D10K: Other PT Losses	0.35	1.48	1.48	-0.89	-0.89	1.23	0.12
138	0	D10K: D10K: Other PT Losses	0.35	1.48	1.48	-0.89	-0.89	1.23	0.12
138	1	D10K: D10K: Other PT Losses	0.35	1.03	1.03	-0.40	-0.40	0.88	0.21
138	2	D10K: D10K: Other PT Losses	0.35	0.58	0.58	0.09	0.09	0.53	0.30
139	0	D10K: D10K: Other PT Losses	0.35	0.58	0.58	0.09	0.09	0.53	0.30
139	1	D10K: D10K: Other PT Losses	0.35	0.11	0.11	0.62	0.62	0.16	0.40
139	2	D10K: D10K: Other PT Losses	0.35	-0.37	-0.37	1.14	1.14	-0.21	0.50

MEMBER STRESSES

DECK & CANOPY MEMBERS
D10K

(-) compression

			UTILITIES (DW)						
Member	Station	Result Case	(P/A) @ Centroid (kips/ft²)	Normal Stress @ Point 1 (kips/ft²)	Normal Stress @ Point 2 (kips/ft²)	Normal Stress @ Point 3 (kips/ft²)	Normal Stress @ Point 4 (kips/ft²)	Normal Stress @ Point 5 (kips/ft²)	Normal Stress @ Point 6 (kips/ft²)
140	0	D10K: D10K: Other PT Losses	0.35	-0.37	-0.37	1.14	1.14	-0.21	0.50
140	1	D10K: D10K: Other PT Losses	0.35	-0.50	-0.50	1.28	1.28	-0.31	0.52
140	2	D10K: D10K: Other PT Losses	0.35	-0.63	-0.63	1.42	1.42	-0.41	0.55
142	0	D10K: D10K: Other PT Losses	0.60	0.81	0.81	0.37	0.37	0.77	0.56
142	1	D10K: D10K: Other PT Losses	0.60	0.78	0.78	0.40	0.40	0.74	0.56
142	2	D10K: D10K: Other PT Losses	0.60	0.75	0.75	0.44	0.44	0.72	0.57
143	0	D10K: D10K: Other PT Losses	0.60	0.75	0.75	0.44	0.44	0.72	0.57
143	1	D10K: D10K: Other PT Losses	0.60	0.68	0.68	0.51	0.51	0.66	0.58
143	2	D10K: D10K: Other PT Losses	0.60	0.61	0.61	0.59	0.59	0.61	0.60
144	0	D10K: D10K: Other PT Losses	0.60	0.61	0.61	0.59	0.59	0.61	0.60
144	1	D10K: D10K: Other PT Losses	0.60	0.54	0.54	0.67	0.67	0.56	0.61
144	2	D10K: D10K: Other PT Losses	0.60	0.47	0.47	0.74	0.74	0.50	0.63
145	0	D10K: D10K: Other PT Losses	0.60	0.47	0.47	0.74	0.74	0.50	0.63
145	1	D10K: D10K: Other PT Losses	0.60	0.45	0.45	0.77	0.77	0.48	0.63
145	2	D10K: D10K: Other PT Losses	0.60	0.42	0.42	0.80	0.80	0.46	0.64
147	0	D10K: D10K: Other PT Losses	0.52	2.84	2.84	-2.02	-2.02	2.32	0.04
147	1	D10K: D10K: Other PT Losses	0.52	2.47	2.47	-1.62	-1.62	2.04	0.12
147	2	D10K: D10K: Other PT Losses	0.52	2.11	2.11	-1.22	-1.22	1.75	0.20
148	0	D10K: D10K: Other PT Losses	0.52	2.11	2.11	-1.22	-1.22	1.75	0.20
148	1	D10K: D10K: Other PT Losses	0.52	1.45	1.45	-0.50	-0.50	1.24	0.33
148	2	D10K: D10K: Other PT Losses	0.52	0.79	0.79	0.23	0.23	0.73	0.47
149	0	D10K: D10K: Other PT Losses	0.52	0.79	0.79	0.23	0.23	0.73	0.47
149	1	D10K: D10K: Other PT Losses	0.52	0.08	0.08	1.01	1.01	0.18	0.61
149	2	D10K: D10K: Other PT Losses	0.52	-0.63	-0.63	1.78	1.78	-0.37	0.76
150	0	D10K: D10K: Other PT Losses	0.52	-0.63	-0.63	1.78	1.78	-0.37	0.76
150	1	D10K: D10K: Other PT Losses	0.52	-0.84	-0.84	2.02	2.02	-0.54	0.80
150	2	D10K: D10K: Other PT Losses	0.52	-1.05	-1.05	2.25	2.25	-0.70	0.84
152	0	D10K: D10K: Other PT Losses	0.42	1.81	1.81	-1.11	-1.11	1.50	0.13
152	1	D10K: D10K: Other PT Losses	0.42	1.51	1.51	-0.79	-0.79	1.27	0.19
152	2	D10K: D10K: Other PT Losses	0.42	1.22	1.22	-0.47	-0.47	1.04	0.25
153	0	D10K: D10K: Other PT Losses	0.42	1.22	1.22	-0.47	-0.47	1.04	0.25
153	1	D10K: D10K: Other PT Losses	0.42	0.74	0.74	0.06	0.06	0.67	0.35
153	2	D10K: D10K: Other PT Losses	0.42	0.26	0.26	0.59	0.59	0.29	0.45
154	0	D10K: D10K: Other PT Losses	0.42	0.26	0.26	0.59	0.59	0.29	0.45
154	1	D10K: D10K: Other PT Losses	0.42	-0.26	-0.26	1.16	1.16	-0.11	0.56
154	2	D10K: D10K: Other PT Losses	0.42	-0.78	-0.78	1.74	1.74	-0.52	0.66
155	0	D10K: D10K: Other PT Losses	0.42	-0.78	-0.78	1.74	1.74	-0.52	0.66
155	1	D10K: D10K: Other PT Losses	0.42	-0.95	-0.95	1.91	1.91	-0.64	0.70
155	2	D10K: D10K: Other PT Losses	0.42	-1.11	-1.11	2.09	2.09	-0.77	0.73
157	0	D10K: D10K: Other PT Losses	0.16	1.93	1.93	-1.79	-1.79	1.54	-0.21
157	1	D10K: D10K: Other PT Losses	0.16	1.62	1.62	-1.45	-1.45	1.30	-0.14
157	2	D10K: D10K: Other PT Losses	0.16	1.31	1.31	-1.11	-1.11	1.06	-0.08
158	0	D10K: D10K: Other PT Losses	0.16	1.31	1.31	-1.11	-1.11	1.06	-0.08
158	1	D10K: D10K: Other PT Losses	0.16	0.32	0.32	-0.02	-0.02	0.28	0.12
158	2	D10K: D10K: Other PT Losses	0.16	-0.67	-0.67	1.07	1.07	-0.49	0.33
159	0	D10K: D10K: Other PT Losses	0.16	-0.67	-0.67	1.07	1.07	-0.49	0.33
159	1	D10K: D10K: Other PT Losses	0.16	-1.68	-1.68	2.17	2.17	-1.27	0.54
159	2	D10K: D10K: Other PT Losses	0.16	-2.68	-2.68	3.28	3.28	-2.05	0.74

MEMBER STRESSES

DECK & CANOPY MEMBERS
D10K

(-) compression

			LIVE LOAD ON FULL LENGTH OF BRIDGE (LL1)						
Member	Station	Result Case	(P/A) @ Centroid (kips/ft²)	Normal Stress @ Point 1 (kips/ft²)	Normal Stress @ Point 2 (kips/ft²)	Normal Stress @ Point 3 (kips/ft²)	Normal Stress @ Point 4 (kips/ft²)	Normal Stress @ Point 5 (kips/ft²)	Normal Stress @ Point 6 (kips/ft²)
1	0	D10K: D10K: Other PT Losses	0.00	0.00	0.00	0.00	0.00	0.00	0.00
1	1	D10K: D10K: Other PT Losses	0.00	0.00	0.00	0.00	0.00	0.00	0.00
1	2	D10K: D10K: Other PT Losses	0.00	0.01	0.01	0.00	0.00	0.00	-0.01
2	0	D10K: D10K: Other PT Losses	-0.10	0.74	0.74	0.02	0.02	0.49	-1.37
2	1	D10K: D10K: Other PT Losses	-0.10	-4.34	-4.34	-0.72	-0.72	-3.05	6.28
2	2	D10K: D10K: Other PT Losses	-0.10	-9.39	-9.39	-1.46	-1.46	-6.57	13.87
3	0	D10K: D10K: Other PT Losses	5.94	2.62	2.62	5.45	5.45	3.63	10.93
3	1	D10K: D10K: Other PT Losses	5.94	-3.42	-3.42	4.57	4.57	-0.58	20.01
3	2	D10K: D10K: Other PT Losses	5.94	-7.98	-7.98	3.90	3.91	-3.75	26.86
4	0	D10K: D10K: Other PT Losses	5.94	-7.98	-7.98	3.90	3.91	-3.75	26.86
4	1	D10K: D10K: Other PT Losses	5.94	-12.75	-12.75	3.21	3.21	-7.07	34.04
4	2	D10K: D10K: Other PT Losses	5.95	-10.72	-10.73	3.50	3.51	-5.66	31.01
5	0	D10K: D10K: Other PT Losses	5.95	-10.72	-10.73	3.50	3.51	-5.66	31.01
5	1	D10K: D10K: Other PT Losses	5.95	-1.91	-1.92	4.79	4.81	0.47	17.77
5	2	D10K: D10K: Other PT Losses	5.95	13.69	13.67	7.07	7.09	11.33	-5.66
6	0	D10K: D10K: Other PT Losses	5.95	13.69	13.67	7.07	7.09	11.33	-5.66
6	1	D10K: D10K: Other PT Losses	5.95	16.29	16.27	7.46	7.47	13.14	-9.57
6	2	D10K: D10K: Other PT Losses	5.95	19.01	18.99	7.85	7.87	15.04	-13.66
7	0	D10K: D10K: Other PT Losses	5.15	20.16	20.14	7.34	7.35	15.59	-17.40
7	1	D10K: D10K: Other PT Losses	5.15	18.37	18.35	7.07	7.09	14.35	-14.71
7	2	D10K: D10K: Other PT Losses	5.15	16.61	16.59	6.82	6.83	13.12	-12.05
8	0	D10K: D10K: Other PT Losses	6.35	18.45	18.43	8.11	8.13	14.77	-11.82
8	1	D10K: D10K: Other PT Losses	6.35	11.30	11.28	7.07	7.08	9.79	-1.06
8	2	D10K: D10K: Other PT Losses	6.35	5.36	5.34	6.20	6.22	5.66	7.86
9	0	D10K: D10K: Other PT Losses	6.35	5.36	5.34	6.20	6.22	5.66	7.86
9	1	D10K: D10K: Other PT Losses	6.36	-4.13	-4.16	4.81	4.83	-0.95	22.15
9	2	D10K: D10K: Other PT Losses	6.36	-5.96	-5.99	4.54	4.57	-2.22	24.91
10	0	D10K: D10K: Other PT Losses	6.36	-5.96	-5.99	4.54	4.57	-2.22	24.91
10	1	D10K: D10K: Other PT Losses	6.37	-0.11	-0.14	5.40	5.43	1.85	16.13
10	2	D10K: D10K: Other PT Losses	6.37	13.41	13.38	7.38	7.41	11.26	-4.20
11	0	D10K: D10K: Other PT Losses	6.37	13.41	13.38	7.38	7.41	11.26	-4.20
11	1	D10K: D10K: Other PT Losses	6.37	15.82	15.79	7.73	7.77	12.94	-7.81
11	2	D10K: D10K: Other PT Losses	6.37	18.37	18.33	8.11	8.14	14.71	-11.64
12	0	D10K: D10K: Other PT Losses	6.34	18.21	18.17	8.05	8.09	14.59	-11.48
12	1	D10K: D10K: Other PT Losses	6.34	18.03	18.00	8.03	8.06	14.47	-11.21
12	2	D10K: D10K: Other PT Losses	6.34	17.88	17.84	8.01	8.04	14.36	-10.98
13	0	D10K: D10K: Other PT Losses	4.97	17.10	17.07	6.72	6.76	13.40	-13.25
13	1	D10K: D10K: Other PT Losses	4.97	10.82	10.78	5.80	5.84	9.03	-3.80
13	2	D10K: D10K: Other PT Losses	4.97	5.46	5.42	5.02	5.06	5.30	4.26
14	0	D10K: D10K: Other PT Losses	4.97	5.46	5.42	5.02	5.06	5.30	4.26
14	1	D10K: D10K: Other PT Losses	4.97	-5.37	-5.41	3.44	3.48	-2.24	20.55
14	2	D10K: D10K: Other PT Losses	4.98	-7.01	-7.06	3.20	3.24	-3.38	23.03
15	0	D10K: D10K: Other PT Losses	4.98	-7.01	-7.06	3.20	3.24	-3.38	23.03
15	1	D10K: D10K: Other PT Losses	4.98	0.53	0.48	4.30	4.35	1.87	11.71
15	2	D10K: D10K: Other PT Losses	4.98	17.25	17.20	6.75	6.80	13.51	-13.42
16	0	D10K: D10K: Other PT Losses	4.98	17.25	17.20	6.75	6.80	13.51	-13.42
16	1	D10K: D10K: Other PT Losses	4.99	19.80	19.74	7.12	7.17	15.28	-17.24
16	2	D10K: D10K: Other PT Losses	4.99	22.47	22.41	7.51	7.56	17.13	-21.25

MEMBER STRESSES

DECK & CANOPY MEMBERS
D10K

(-) compression

			LIVE LOAD ON FULL LENGTH OF BRIDGE (LL1)						
Member	Station	Result Case	(P/A) @ Centroid (kips/ft²)	Normal Stress @ Point 1 (kips/ft²)	Normal Stress @ Point 2 (kips/ft²)	Normal Stress @ Point 3 (kips/ft²)	Normal Stress @ Point 4 (kips/ft²)	Normal Stress @ Point 5 (kips/ft²)	Normal Stress @ Point 6 (kips/ft²)
17	0	D10K: D10K: Other PT Losses	4.86	20.24	20.19	7.08	7.14	15.55	-18.22
17	1	D10K: D10K: Other PT Losses	4.86	21.56	21.51	7.28	7.33	16.47	-20.20
17	2	D10K: D10K: Other PT Losses	4.86	22.91	22.85	7.47	7.53	17.40	-22.22
18	0	D10K: D10K: Other PT Losses	1.89	20.26	20.20	4.55	4.60	14.66	-25.67
18	1	D10K: D10K: Other PT Losses	1.89	14.44	14.38	3.70	3.75	10.61	-16.92
18	2	D10K: D10K: Other PT Losses	1.90	9.21	9.16	2.93	2.99	6.97	-9.06
19	0	D10K: D10K: Other PT Losses	1.90	9.21	9.16	2.93	2.99	6.97	-9.06
19	1	D10K: D10K: Other PT Losses	1.90	-6.41	-6.47	0.65	0.71	-3.91	14.44
19	2	D10K: D10K: Other PT Losses	1.90	-11.21	-11.27	-0.05	0.01	-7.24	21.66
20	0	D10K: D10K: Other PT Losses	1.90	-11.21	-11.27	-0.05	0.01	-7.24	21.66
20	1	D10K: D10K: Other PT Losses	1.91	-5.18	-5.25	0.83	0.90	-3.05	12.61
20	2	D10K: D10K: Other PT Losses	1.91	11.68	11.61	3.30	3.37	8.69	-12.71
21	0	D10K: D10K: Other PT Losses	1.91	11.68	11.61	3.30	3.37	8.69	-12.71
21	1	D10K: D10K: Other PT Losses	1.91	15.77	15.70	3.90	3.97	11.53	-18.86
21	2	D10K: D10K: Other PT Losses	1.91	20.20	20.13	4.55	4.62	14.62	-25.52
22	0	D10K: D10K: Other PT Losses	0.68	17.06	16.99	3.03	3.11	12.06	-23.89
22	1	D10K: D10K: Other PT Losses	0.68	19.73	19.66	3.42	3.50	13.91	-27.90
22	2	D10K: D10K: Other PT Losses	0.68	22.42	22.35	3.82	3.89	15.79	-31.95
23	0	D10K: D10K: Other PT Losses	-2.10	18.90	18.83	0.93	1.01	12.49	-33.60
23	1	D10K: D10K: Other PT Losses	-2.10	14.78	14.71	0.33	0.40	9.63	-27.41
23	2	D10K: D10K: Other PT Losses	-2.10	10.94	10.87	-0.23	-0.16	6.95	-21.63
24	0	D10K: D10K: Other PT Losses	-2.10	10.94	10.87	-0.23	-0.16	6.95	-21.63
24	1	D10K: D10K: Other PT Losses	-2.09	-7.66	-7.74	-2.95	-2.87	-5.99	6.34
24	2	D10K: D10K: Other PT Losses	-2.09	-13.85	-13.93	-3.85	-3.77	-10.30	15.66
25	0	D10K: D10K: Other PT Losses	-2.09	-13.85	-13.93	-3.85	-3.77	-10.30	15.66
25	1	D10K: D10K: Other PT Losses	-2.08	-7.63	-7.72	-2.94	-2.86	-5.98	6.33
25	2	D10K: D10K: Other PT Losses	-2.08	11.01	10.91	-0.22	-0.12	7.00	-21.67
26	0	D10K: D10K: Other PT Losses	-2.08	11.01	10.91	-0.22	-0.12	7.00	-21.67
26	1	D10K: D10K: Other PT Losses	-2.08	17.78	17.69	0.77	0.87	11.72	-31.86
26	2	D10K: D10K: Other PT Losses	-2.07	25.38	25.28	1.89	1.98	17.00	-43.27
29	0	D10K: D10K: Other PT Losses	-4.80	17.83	17.83	-1.49	-1.49	10.95	-38.83
29	1	D10K: D10K: Other PT Losses	-4.80	10.35	10.35	-2.59	-2.59	5.74	-27.58
29	2	D10K: D10K: Other PT Losses	-4.80	3.69	3.69	-3.56	-3.56	1.11	-17.57
30	0	D10K: D10K: Other PT Losses	-4.80	3.69	3.69	-3.56	-3.56	1.11	-17.57
30	1	D10K: D10K: Other PT Losses	-4.80	-14.25	-14.25	-6.18	-6.18	-11.38	9.42
30	2	D10K: D10K: Other PT Losses	-4.79	-19.78	-19.78	-6.98	-6.98	-15.22	17.74
31	0	D10K: D10K: Other PT Losses	-4.79	-19.78	-19.78	-6.98	-6.98	-15.22	17.74
31	1	D10K: D10K: Other PT Losses	-4.79	-12.89	-12.88	-5.97	-5.97	-10.42	7.39
31	2	D10K: D10K: Other PT Losses	-4.78	6.43	6.43	-3.14	-3.14	3.02	-21.63
32	0	D10K: D10K: Other PT Losses	-4.78	6.43	6.43	-3.14	-3.14	3.02	-21.63
32	1	D10K: D10K: Other PT Losses	-4.78	10.30	10.30	-2.58	-2.58	5.72	-27.46
32	2	D10K: D10K: Other PT Losses	-4.78	14.45	14.45	-1.97	-1.97	8.60	-33.69
33	0	D10K: D10K: Other PT Losses	-3.69	14.45	14.45	-1.04	-1.04	8.93	-30.96
33	1	D10K: D10K: Other PT Losses	-3.69	14.28	14.28	-1.06	-1.07	8.81	-30.71
33	2	D10K: D10K: Other PT Losses	-3.69	14.11	14.11	-1.09	-1.09	8.70	-30.46
34	0	D10K: D10K: Other PT Losses	-3.69	13.53	13.53	-1.17	-1.17	8.29	-29.57
34	1	D10K: D10K: Other PT Losses	-3.69	11.53	11.53	-1.46	-1.46	6.91	-26.57
34	2	D10K: D10K: Other PT Losses	-3.69	9.68	9.68	-1.73	-1.73	5.61	-23.78

MEMBER STRESSES

DECK & CANOPY MEMBERS
D10K

(-) compression

			LIVE LOAD ON FULL LENGTH OF BRIDGE (LL1)						
Member	Station	Result Case	(P/A) @ Centroid (kips/ft²)	Normal Stress @ Point 1 (kips/ft²)	Normal Stress @ Point 2 (kips/ft²)	Normal Stress @ Point 3 (kips/ft²)	Normal Stress @ Point 4 (kips/ft²)	Normal Stress @ Point 5 (kips/ft²)	Normal Stress @ Point 6 (kips/ft²)
35	0	D10K: D10K: Other PT Losses	-3.69	9.68	9.68	-1.73	-1.73	5.61	-23.78
35	1	D10K: D10K: Other PT Losses	-3.69	4.81	4.81	-2.44	-2.44	2.23	-16.46
35	2	D10K: D10K: Other PT Losses	-3.68	1.25	1.25	-2.96	-2.96	-0.25	-11.11
36	0	D10K: D10K: Other PT Losses	-3.68	1.25	1.25	-2.96	-2.96	-0.25	-11.11
36	1	D10K: D10K: Other PT Losses	-3.68	-0.99	-0.99	-3.29	-3.29	-1.81	-7.73
36	2	D10K: D10K: Other PT Losses	-3.68	-1.92	-1.92	-3.42	-3.42	-2.45	-6.34
37	0	D10K: D10K: Other PT Losses	-3.68	-1.92	-1.92	-3.42	-3.42	-2.45	-6.34
37	1	D10K: D10K: Other PT Losses	-3.68	-1.88	-1.88	-3.42	-3.42	-2.43	-6.39
37	2	D10K: D10K: Other PT Losses	-3.68	-1.49	-1.49	-3.36	-3.36	-2.15	-6.98
38	0	D10K: D10K: Other PT Losses	-2.99	-0.06	-0.06	-2.56	-2.56	-0.95	-7.40
38	1	D10K: D10K: Other PT Losses	-2.99	-0.35	-0.35	-2.60	-2.60	-1.15	-6.96
38	2	D10K: D10K: Other PT Losses	-2.99	-0.64	-0.64	-2.64	-2.65	-1.35	-6.52
39	0	D10K: D10K: Other PT Losses	-2.97	0.73	0.73	-2.43	-2.43	-0.39	-8.52
39	1	D10K: D10K: Other PT Losses	-2.97	-0.35	-0.35	-2.58	-2.58	-1.14	-6.90
39	2	D10K: D10K: Other PT Losses	-2.97	-1.30	-1.30	-2.72	-2.72	-1.81	-5.46
40	0	D10K: D10K: Other PT Losses	-2.97	-1.30	-1.30	-2.72	-2.72	-1.81	-5.46
40	1	D10K: D10K: Other PT Losses	-2.96	-3.42	-3.42	-3.03	-3.03	-3.28	-2.28
40	2	D10K: D10K: Other PT Losses	-2.96	-4.45	-4.45	-3.18	-3.18	-4.00	-0.73
41	0	D10K: D10K: Other PT Losses	-2.96	-4.45	-4.45	-3.18	-3.18	-4.00	-0.73
41	1	D10K: D10K: Other PT Losses	-2.96	-4.39	-4.39	-3.17	-3.17	-3.96	-0.81
41	2	D10K: D10K: Other PT Losses	-2.96	-3.24	-3.24	-3.00	-3.00	-3.15	-2.54
42	0	D10K: D10K: Other PT Losses	-2.96	-3.24	-3.24	-3.00	-3.00	-3.15	-2.54
42	1	D10K: D10K: Other PT Losses	-2.96	-1.98	-1.98	-2.82	-2.82	-2.28	-4.43
42	2	D10K: D10K: Other PT Losses	-2.96	-0.30	-0.30	-2.57	-2.57	-1.11	-6.96
43	0	D10K: D10K: Other PT Losses	-1.95	1.16	1.16	-1.49	-1.49	0.21	-6.61
43	1	D10K: D10K: Other PT Losses	-1.95	0.88	0.88	-1.53	-1.53	0.02	-6.19
43	2	D10K: D10K: Other PT Losses	-1.95	0.61	0.61	-1.57	-1.57	-0.17	-5.78
44	0	D10K: D10K: Other PT Losses	-1.91	2.01	2.01	-1.34	-1.34	0.82	-7.81
44	1	D10K: D10K: Other PT Losses	-1.91	0.84	0.85	-1.51	-1.51	0.01	-6.06
44	2	D10K: D10K: Other PT Losses	-1.91	-0.20	-0.20	-1.66	-1.66	-0.72	-4.49
45	0	D10K: D10K: Other PT Losses	-1.91	-0.20	-0.20	-1.66	-1.66	-0.72	-4.49
45	1	D10K: D10K: Other PT Losses	-1.91	-2.49	-2.48	-2.00	-2.00	-2.31	-1.05
45	2	D10K: D10K: Other PT Losses	-1.91	-3.83	-3.83	-2.19	-2.19	-3.25	0.97
46	0	D10K: D10K: Other PT Losses	-1.91	-3.83	-3.83	-2.19	-2.19	-3.25	0.97
46	1	D10K: D10K: Other PT Losses	-1.91	-4.23	-4.23	-2.25	-2.25	-3.53	1.58
46	2	D10K: D10K: Other PT Losses	-1.91	-3.69	-3.69	-2.17	-2.17	-3.15	0.78
47	0	D10K: D10K: Other PT Losses	-1.91	-3.69	-3.69	-2.17	-2.17	-3.15	0.78
47	1	D10K: D10K: Other PT Losses	-1.91	-2.74	-2.74	-2.03	-2.03	-2.49	-0.66
47	2	D10K: D10K: Other PT Losses	-1.91	-1.31	-1.31	-1.82	-1.82	-1.49	-2.81
48	0	D10K: D10K: Other PT Losses	-1.05	-0.06	-0.06	-0.90	-0.90	-0.36	-2.54
48	1	D10K: D10K: Other PT Losses	-1.05	-0.26	-0.26	-0.93	-0.93	-0.50	-2.23
48	2	D10K: D10K: Other PT Losses	-1.05	-0.46	-0.46	-0.96	-0.96	-0.64	-1.92
49	0	D10K: D10K: Other PT Losses	-1.13	0.53	0.53	-0.89	-0.89	0.02	-3.63
49	1	D10K: D10K: Other PT Losses	-1.13	0.39	0.40	-0.91	-0.91	-0.07	-3.43
49	2	D10K: D10K: Other PT Losses	-1.13	0.38	0.38	-0.91	-0.91	-0.08	-3.41
50	0	D10K: D10K: Other PT Losses	-1.13	0.38	0.38	-0.91	-0.91	-0.08	-3.41
50	1	D10K: D10K: Other PT Losses	-1.13	0.93	0.93	-0.83	-0.83	0.30	-4.23
50	2	D10K: D10K: Other PT Losses	-1.13	2.31	2.31	-0.63	-0.63	1.26	-6.30

MEMBER STRESSES

DECK & CANOPY MEMBERS
D10K

(-) compression

			LIVE LOAD ON FULL LENGTH OF BRIDGE (LL1)						
Member	Station	Result Case	(P/A) @ Centroid (kips/ft²)	Normal Stress @ Point 1 (kips/ft²)	Normal Stress @ Point 2 (kips/ft²)	Normal Stress @ Point 3 (kips/ft²)	Normal Stress @ Point 4 (kips/ft²)	Normal Stress @ Point 5 (kips/ft²)	Normal Stress @ Point 6 (kips/ft²)
51	0	D10K: D10K: Other PT Losses	-1.13	2.31	2.31	-0.63	-0.63	1.26	-6.30
51	1	D10K: D10K: Other PT Losses	-1.13	4.53	4.53	-0.30	-0.30	2.81	-9.63
51	2	D10K: D10K: Other PT Losses	-1.13	7.58	7.58	0.15	0.15	4.93	-14.22
52	0	D10K: D10K: Other PT Losses	-1.13	7.58	7.58	0.15	0.15	4.93	-14.22
52	1	D10K: D10K: Other PT Losses	-1.13	10.60	10.60	0.59	0.59	7.04	-18.76
52	2	D10K: D10K: Other PT Losses	-1.13	14.15	14.15	1.11	1.11	9.51	-24.09
60	0	D10K: D10K: Other PT Losses	0.00	0.00	0.00	0.00	0.00	0.00	0.00
60	1	D10K: D10K: Other PT Losses	0.00	0.00	0.00	0.00	0.00	0.00	0.00
60	2	D10K: D10K: Other PT Losses	0.00	0.00	0.00	0.00	0.00	0.00	0.00
101	0	D10K: D10K: Other PT Losses	0.00	0.00	0.00	0.00	0.00	0.00	0.00
101	1	D10K: D10K: Other PT Losses	0.00	0.00	0.00	0.00	0.00	0.00	0.00
101	2	D10K: D10K: Other PT Losses	0.00	0.00	0.00	0.00	0.00	0.00	0.00
102	0	D10K: D10K: Other PT Losses	0.00	0.00	0.00	0.00	0.00	0.00	0.00
102	1	D10K: D10K: Other PT Losses	0.00	0.00	0.00	0.00	0.00	0.00	0.00
102	2	D10K: D10K: Other PT Losses	0.00	0.00	0.00	0.00	0.00	0.00	0.00
103	0	D10K: D10K: Other PT Losses	0.00	0.00	0.00	0.00	0.00	0.00	0.00
103	1	D10K: D10K: Other PT Losses	0.00	0.00	0.00	0.00	0.00	0.00	0.00
103	2	D10K: D10K: Other PT Losses	0.00	0.00	0.00	0.00	0.00	0.00	0.00
104	0	D10K: D10K: Other PT Losses	0.00	0.00	0.00	0.00	0.00	0.00	0.00
104	1	D10K: D10K: Other PT Losses	0.00	0.00	0.00	0.00	0.00	0.00	0.00
104	2	D10K: D10K: Other PT Losses	0.00	0.00	0.00	0.00	0.00	0.00	0.00
106	0	D10K: D10K: Other PT Losses	-14.83	3.59	3.59	-35.05	-35.05	-0.52	-18.62
106	1	D10K: D10K: Other PT Losses	-14.83	2.33	2.33	-33.68	-33.68	-1.49	-18.37
106	2	D10K: D10K: Other PT Losses	-14.83	1.08	1.07	-32.30	-32.30	-2.47	-18.11
107	0	D10K: D10K: Other PT Losses	-14.83	1.08	1.07	-32.30	-32.30	-2.47	-18.11
107	1	D10K: D10K: Other PT Losses	-14.83	-6.48	-6.49	-24.00	-23.99	-8.35	-16.55
107	2	D10K: D10K: Other PT Losses	-14.83	-14.04	-14.05	-15.70	-15.69	-14.22	-14.99
108	0	D10K: D10K: Other PT Losses	-14.83	-14.04	-14.05	-15.70	-15.69	-14.22	-14.99
108	1	D10K: D10K: Other PT Losses	-14.83	-21.19	-21.20	-7.85	-7.84	-19.78	-13.52
108	2	D10K: D10K: Other PT Losses	-14.83	-28.34	-28.35	0.00	0.01	-25.33	-12.05
109	0	D10K: D10K: Other PT Losses	-14.83	-28.34	-28.35	0.00	0.01	-25.33	-12.05
109	1	D10K: D10K: Other PT Losses	-14.83	-30.95	-30.96	2.87	2.87	-27.36	-11.51
109	2	D10K: D10K: Other PT Losses	-14.83	-33.57	-33.57	5.74	5.74	-29.39	-10.98
111	0	D10K: D10K: Other PT Losses	-20.30	-29.81	-29.82	-9.85	-9.84	-27.69	-18.34
111	1	D10K: D10K: Other PT Losses	-20.30	-29.35	-29.35	-10.36	-10.36	-27.33	-18.43
111	2	D10K: D10K: Other PT Losses	-20.30	-28.88	-28.88	-10.87	-10.87	-26.97	-18.53
112	0	D10K: D10K: Other PT Losses	-20.30	-28.88	-28.88	-10.87	-10.87	-26.97	-18.53
112	1	D10K: D10K: Other PT Losses	-20.30	-26.76	-26.77	-13.19	-13.19	-25.32	-18.96
112	2	D10K: D10K: Other PT Losses	-20.30	-24.65	-24.66	-15.52	-15.51	-23.68	-19.40
113	0	D10K: D10K: Other PT Losses	-20.30	-24.65	-24.66	-15.52	-15.51	-23.68	-19.40
113	1	D10K: D10K: Other PT Losses	-20.30	-22.40	-22.40	-17.99	-17.98	-21.93	-19.86
113	2	D10K: D10K: Other PT Losses	-20.30	-20.14	-20.15	-20.46	-20.45	-20.18	-20.33
114	0	D10K: D10K: Other PT Losses	-20.30	-20.14	-20.15	-20.46	-20.45	-20.18	-20.33
114	1	D10K: D10K: Other PT Losses	-20.30	-19.61	-19.62	-21.04	-21.04	-19.77	-20.44
114	2	D10K: D10K: Other PT Losses	-20.30	-19.09	-19.09	-21.62	-21.62	-19.36	-20.54
116	0	D10K: D10K: Other PT Losses	-19.34	-27.78	-27.79	-10.07	-10.06	-25.90	-17.60
116	1	D10K: D10K: Other PT Losses	-19.34	-27.26	-27.27	-10.64	-10.63	-25.50	-17.71
116	2	D10K: D10K: Other PT Losses	-19.34	-26.74	-26.75	-11.21	-11.20	-25.10	-17.81

MEMBER STRESSES

DECK & CANOPY MEMBERS
D10K

(-) compression

			LIVE LOAD ON FULL LENGTH OF BRIDGE (LL1)						
Member	Station	Result Case	(P/A) @ Centroid (kips/ft²)	Normal Stress @ Point 1 (kips/ft²)	Normal Stress @ Point 2 (kips/ft²)	Normal Stress @ Point 3 (kips/ft²)	Normal Stress @ Point 4 (kips/ft²)	Normal Stress @ Point 5 (kips/ft²)	Normal Stress @ Point 6 (kips/ft²)
117	0	D10K: D10K: Other PT Losses	-19.34	-26.74	-26.75	-11.21	-11.20	-25.10	-17.81
117	1	D10K: D10K: Other PT Losses	-19.34	-23.72	-23.73	-14.52	-14.52	-22.75	-18.43
117	2	D10K: D10K: Other PT Losses	-19.34	-20.70	-20.71	-17.84	-17.83	-20.40	-19.06
118	0	D10K: D10K: Other PT Losses	-19.34	-20.70	-20.71	-17.84	-17.83	-20.40	-19.06
118	1	D10K: D10K: Other PT Losses	-19.34	-17.59	-17.60	-21.26	-21.25	-17.98	-19.70
118	2	D10K: D10K: Other PT Losses	-19.34	-14.48	-14.49	-24.67	-24.66	-15.56	-20.34
119	0	D10K: D10K: Other PT Losses	-19.34	-14.48	-14.49	-24.67	-24.66	-15.56	-20.34
119	1	D10K: D10K: Other PT Losses	-19.34	-13.91	-13.92	-25.30	-25.29	-15.12	-20.46
119	2	D10K: D10K: Other PT Losses	-19.34	-13.33	-13.34	-25.93	-25.92	-14.67	-20.57
121	0	D10K: D10K: Other PT Losses	-11.19	-18.63	-18.64	-3.02	-3.01	-16.98	-9.66
121	1	D10K: D10K: Other PT Losses	-11.19	-18.23	-18.24	-3.47	-3.46	-16.66	-9.74
121	2	D10K: D10K: Other PT Losses	-11.19	-17.82	-17.83	-3.91	-3.90	-16.35	-9.83
122	0	D10K: D10K: Other PT Losses	-11.19	-17.82	-17.83	-3.91	-3.90	-16.35	-9.83
122	1	D10K: D10K: Other PT Losses	-11.19	-14.75	-14.76	-7.29	-7.28	-13.96	-10.46
122	2	D10K: D10K: Other PT Losses	-11.19	-11.67	-11.69	-10.66	-10.65	-11.57	-11.09
123	0	D10K: D10K: Other PT Losses	-11.19	-11.67	-11.69	-10.66	-10.65	-11.57	-11.09
123	1	D10K: D10K: Other PT Losses	-11.19	-8.60	-8.61	-14.03	-14.02	-9.18	-11.72
123	2	D10K: D10K: Other PT Losses	-11.19	-5.53	-5.54	-17.41	-17.40	-6.80	-12.36
124	0	D10K: D10K: Other PT Losses	-11.19	-5.53	-5.54	-17.41	-17.40	-6.80	-12.36
124	1	D10K: D10K: Other PT Losses	-11.19	-5.17	-5.18	-17.80	-17.79	-6.52	-12.43
124	2	D10K: D10K: Other PT Losses	-11.19	-4.82	-4.83	-18.19	-18.18	-6.24	-12.50
126	0	D10K: D10K: Other PT Losses	2.75	-10.53	-10.54	17.33	17.34	-7.57	5.48
126	1	D10K: D10K: Other PT Losses	2.75	-9.03	-9.04	15.69	15.70	-6.41	5.18
126	2	D10K: D10K: Other PT Losses	2.75	-7.53	-7.55	14.04	14.05	-5.25	4.87
127	0	D10K: D10K: Other PT Losses	2.75	-7.53	-7.55	14.04	14.05	-5.25	4.87
127	1	D10K: D10K: Other PT Losses	2.75	-1.98	-1.99	7.95	7.96	-0.93	3.73
127	2	D10K: D10K: Other PT Losses	2.75	3.57	3.56	1.85	1.86	3.39	2.58
128	0	D10K: D10K: Other PT Losses	2.75	3.57	3.56	1.85	1.86	3.39	2.58
128	1	D10K: D10K: Other PT Losses	2.75	9.20	9.19	-4.33	-4.32	7.76	1.42
133	0	D10K: D10K: Other PT Losses	3.88	8.59	8.59	-1.28	-1.29	7.54	2.91
133	1	D10K: D10K: Other PT Losses	3.88	7.42	7.43	-0.01	-0.01	6.64	3.15
133	2	D10K: D10K: Other PT Losses	3.88	6.26	6.27	1.27	1.27	5.73	3.39
134	0	D10K: D10K: Other PT Losses	3.88	6.26	6.27	1.27	1.27	5.73	3.39
134	1	D10K: D10K: Other PT Losses	3.88	5.10	5.10	2.55	2.55	4.83	3.63
134	2	D10K: D10K: Other PT Losses	3.88	3.93	3.94	3.83	3.83	3.92	3.87
135	0	D10K: D10K: Other PT Losses	3.88	3.93	3.94	3.83	3.83	3.92	3.87
135	1	D10K: D10K: Other PT Losses	3.88	3.64	3.64	4.15	4.15	3.69	3.93
135	2	D10K: D10K: Other PT Losses	3.88	3.34	3.35	4.48	4.47	3.46	3.99
137	0	D10K: D10K: Other PT Losses	1.28	6.50	6.50	-4.46	-4.46	5.34	0.20
137	1	D10K: D10K: Other PT Losses	1.28	5.96	5.96	-3.86	-3.86	4.91	0.31
137	2	D10K: D10K: Other PT Losses	1.28	5.41	5.41	-3.26	-3.26	4.49	0.43
138	0	D10K: D10K: Other PT Losses	1.28	5.41	5.41	-3.26	-3.26	4.49	0.43
138	1	D10K: D10K: Other PT Losses	1.28	3.77	3.77	-1.46	-1.46	3.21	0.76
138	2	D10K: D10K: Other PT Losses	1.28	2.13	2.13	0.34	0.34	1.94	1.10
139	0	D10K: D10K: Other PT Losses	1.28	2.13	2.13	0.34	0.34	1.94	1.10
139	1	D10K: D10K: Other PT Losses	1.28	0.39	0.39	2.25	2.25	0.59	1.46
139	2	D10K: D10K: Other PT Losses	1.28	-1.35	-1.35	4.17	4.16	-0.77	1.82

MEMBER STRESSES

DECK & CANOPY MEMBERS
D10K

(-) compression

			LIVE LOAD ON FULL LENGTH OF BRIDGE (LL1)						
Member	Station	Result Case	(P/A) @ Centroid (kips/ft²)	Normal Stress @ Point 1 (kips/ft²)	Normal Stress @ Point 2 (kips/ft²)	Normal Stress @ Point 3 (kips/ft²)	Normal Stress @ Point 4 (kips/ft²)	Normal Stress @ Point 5 (kips/ft²)	Normal Stress @ Point 6 (kips/ft²)
140	0	D10K: D10K: Other PT Losses	1.28	-1.35	-1.35	4.16	4.16	-0.77	1.82
140	1	D10K: D10K: Other PT Losses	1.28	-1.83	-1.83	4.69	4.68	-1.14	1.92
140	2	D10K: D10K: Other PT Losses	1.28	-2.30	-2.30	5.21	5.21	-1.51	2.01
142	0	D10K: D10K: Other PT Losses	2.20	2.98	2.98	1.34	1.34	2.80	2.04
142	1	D10K: D10K: Other PT Losses	2.20	2.86	2.86	1.47	1.47	2.71	2.06
142	2	D10K: D10K: Other PT Losses	2.20	2.74	2.75	1.60	1.60	2.62	2.09
143	0	D10K: D10K: Other PT Losses	2.20	2.74	2.75	1.60	1.60	2.62	2.09
143	1	D10K: D10K: Other PT Losses	2.20	2.49	2.49	1.88	1.88	2.43	2.14
143	2	D10K: D10K: Other PT Losses	2.20	2.23	2.24	2.16	2.16	2.23	2.19
144	0	D10K: D10K: Other PT Losses	2.20	2.23	2.24	2.16	2.16	2.23	2.19
144	1	D10K: D10K: Other PT Losses	2.20	1.98	1.98	2.44	2.43	2.03	2.24
144	2	D10K: D10K: Other PT Losses	2.20	1.73	1.73	2.71	2.71	1.83	2.30
145	0	D10K: D10K: Other PT Losses	2.20	1.73	1.73	2.71	2.71	1.83	2.29
145	1	D10K: D10K: Other PT Losses	2.20	1.64	1.64	2.81	2.81	1.76	2.31
145	2	D10K: D10K: Other PT Losses	2.20	1.55	1.55	2.91	2.91	1.69	2.33
147	0	D10K: D10K: Other PT Losses	1.91	10.38	10.38	-7.39	-7.39	8.49	0.16
147	1	D10K: D10K: Other PT Losses	1.91	9.04	9.04	-5.92	-5.93	7.45	0.44
147	2	D10K: D10K: Other PT Losses	1.91	7.70	7.71	-4.46	-4.46	6.41	0.71
148	0	D10K: D10K: Other PT Losses	1.91	7.70	7.71	-4.46	-4.46	6.41	0.71
148	1	D10K: D10K: Other PT Losses	1.91	5.29	5.30	-1.81	-1.81	4.54	1.21
148	2	D10K: D10K: Other PT Losses	1.91	2.88	2.89	0.83	0.83	2.67	1.71
149	0	D10K: D10K: Other PT Losses	1.91	2.88	2.89	0.83	0.83	2.67	1.71
149	1	D10K: D10K: Other PT Losses	1.91	0.29	0.29	3.68	3.68	0.65	2.24
149	2	D10K: D10K: Other PT Losses	1.91	-2.30	-2.30	6.53	6.53	-1.36	2.77
150	0	D10K: D10K: Other PT Losses	1.91	-2.30	-2.30	6.53	6.53	-1.36	2.77
150	1	D10K: D10K: Other PT Losses	1.91	-3.07	-3.07	7.37	7.37	-1.96	2.93
150	2	D10K: D10K: Other PT Losses	1.91	-3.84	-3.84	8.22	8.22	-2.56	3.09
152	0	D10K: D10K: Other PT Losses	1.52	6.61	6.61	-4.06	-4.06	5.48	0.48
152	1	D10K: D10K: Other PT Losses	1.52	5.54	5.54	-2.88	-2.88	4.64	0.70
152	2	D10K: D10K: Other PT Losses	1.52	4.46	4.46	-1.70	-1.70	3.81	0.92
153	0	D10K: D10K: Other PT Losses	1.52	4.46	4.46	-1.70	-1.70	3.81	0.92
153	1	D10K: D10K: Other PT Losses	1.52	2.70	2.71	0.23	0.23	2.44	1.28
153	2	D10K: D10K: Other PT Losses	1.52	0.95	0.95	2.16	2.16	1.07	1.64
154	0	D10K: D10K: Other PT Losses	1.52	0.95	0.95	2.16	2.16	1.08	1.64
154	1	D10K: D10K: Other PT Losses	1.52	-0.96	-0.96	4.25	4.25	-0.41	2.04
154	2	D10K: D10K: Other PT Losses	1.52	-2.87	-2.87	6.35	6.35	-1.89	2.43
155	0	D10K: D10K: Other PT Losses	1.52	-2.87	-2.87	6.35	6.35	-1.89	2.43
155	1	D10K: D10K: Other PT Losses	1.52	-3.47	-3.47	7.01	7.00	-2.36	2.55
155	2	D10K: D10K: Other PT Losses	1.52	-4.07	-4.07	7.66	7.66	-2.82	2.68
157	0	D10K: D10K: Other PT Losses	0.58	7.07	7.07	-6.56	-6.56	5.63	-0.76
157	1	D10K: D10K: Other PT Losses	0.58	5.94	5.94	-5.31	-5.31	4.75	-0.53
157	2	D10K: D10K: Other PT Losses	0.58	4.81	4.81	-4.07	-4.07	3.87	-0.29
158	0	D10K: D10K: Other PT Losses	0.58	4.81	4.81	-4.07	-4.07	3.86	-0.29
158	1	D10K: D10K: Other PT Losses	0.58	1.18	1.18	-0.08	-0.08	1.04	0.45
158	2	D10K: D10K: Other PT Losses	0.58	-2.46	-2.46	3.90	3.91	-1.78	1.20
159	0	D10K: D10K: Other PT Losses	0.58	-2.46	-2.46	3.90	3.91	-1.78	1.20
159	1	D10K: D10K: Other PT Losses	0.58	-6.14	-6.14	7.95	7.95	-4.64	1.96
159	2	D10K: D10K: Other PT Losses	0.58	-9.82	-9.82	11.99	11.99	-7.50	2.72

MEMBER STRESSES

DECK & CANOPY MEMBERS
D10K

(-) compression

			LIVE LOAD ON MAIN SPAN (LL2)						
Member	Station	Result Case	(P/A) @ Centroid (kips/ft²)	Normal Stress @ Point 1 (kips/ft²)	Normal Stress @ Point 2 (kips/ft²)	Normal Stress @ Point 3 (kips/ft²)	Normal Stress @ Point 4 (kips/ft²)	Normal Stress @ Point 5 (kips/ft²)	Normal Stress @ Point 6 (kips/ft²)
1	0	D10K: D10K: Other PT Losses	0.00	0.00	0.00	0.00	0.00	0.00	0.00
1	1	D10K: D10K: Other PT Losses	0.00	0.00	0.00	0.00	0.00	0.00	0.00
1	2	D10K: D10K: Other PT Losses	0.00	0.01	0.01	0.00	0.00	0.00	-0.01
2	0	D10K: D10K: Other PT Losses	-0.13	1.00	1.00	0.04	0.04	0.66	-1.82
2	1	D10K: D10K: Other PT Losses	-0.13	-4.76	-4.76	-0.80	-0.80	-3.35	6.84
2	2	D10K: D10K: Other PT Losses	-0.13	-10.48	-10.48	-1.64	-1.64	-7.33	15.44
3	0	D10K: D10K: Other PT Losses	6.94	2.92	2.92	6.35	6.36	4.14	12.99
3	1	D10K: D10K: Other PT Losses	6.94	-3.08	-3.08	5.48	5.48	-0.03	22.01
3	2	D10K: D10K: Other PT Losses	6.95	-7.60	-7.60	4.81	4.82	-3.18	28.81
4	0	D10K: D10K: Other PT Losses	6.95	-7.60	-7.60	4.81	4.82	-3.18	28.81
4	1	D10K: D10K: Other PT Losses	6.95	-12.29	-12.30	4.13	4.14	-6.45	35.88
4	2	D10K: D10K: Other PT Losses	6.95	-10.18	-10.20	4.43	4.46	-4.98	32.73
5	0	D10K: D10K: Other PT Losses	6.95	-10.18	-10.20	4.43	4.46	-4.98	32.73
5	1	D10K: D10K: Other PT Losses	6.96	-1.29	-1.32	5.73	5.77	1.21	19.37
5	2	D10K: D10K: Other PT Losses	6.96	14.39	14.35	8.02	8.06	12.12	-4.18
6	0	D10K: D10K: Other PT Losses	6.96	14.39	14.35	8.02	8.06	12.12	-4.18
6	1	D10K: D10K: Other PT Losses	6.96	17.00	16.96	8.40	8.45	13.94	-8.11
6	2	D10K: D10K: Other PT Losses	6.96	19.74	19.69	8.80	8.85	15.84	-12.21
7	0	D10K: D10K: Other PT Losses	6.08	21.53	21.49	8.31	8.35	16.82	-17.12
7	1	D10K: D10K: Other PT Losses	6.08	19.37	19.33	7.99	8.04	15.31	-13.87
7	2	D10K: D10K: Other PT Losses	6.08	17.23	17.19	7.68	7.73	13.83	-10.66
8	0	D10K: D10K: Other PT Losses	7.91	19.80	19.76	9.63	9.67	16.17	-9.93
8	1	D10K: D10K: Other PT Losses	7.91	12.60	12.55	8.57	8.62	11.16	0.90
8	2	D10K: D10K: Other PT Losses	7.92	6.62	6.57	7.70	7.75	7.00	9.90
9	0	D10K: D10K: Other PT Losses	7.92	6.62	6.57	7.70	7.75	7.00	9.90
9	1	D10K: D10K: Other PT Losses	7.92	-3.00	-3.06	6.29	6.35	0.30	24.38
9	2	D10K: D10K: Other PT Losses	7.92	-4.95	-5.02	6.00	6.07	-1.06	27.33
10	0	D10K: D10K: Other PT Losses	7.92	-4.95	-5.02	6.00	6.07	-1.06	27.33
10	1	D10K: D10K: Other PT Losses	7.93	0.77	0.70	6.84	6.91	2.92	18.74
10	2	D10K: D10K: Other PT Losses	7.93	14.18	14.09	8.80	8.88	12.25	-1.40
11	0	D10K: D10K: Other PT Losses	7.93	14.18	14.09	8.80	8.88	12.25	-1.40
11	1	D10K: D10K: Other PT Losses	7.93	16.57	16.48	9.15	9.23	13.91	-4.99
11	2	D10K: D10K: Other PT Losses	7.93	19.10	19.01	9.52	9.60	15.67	-8.79
12	0	D10K: D10K: Other PT Losses	7.91	19.49	19.40	9.56	9.64	15.94	-9.42
12	1	D10K: D10K: Other PT Losses	7.91	19.08	18.99	9.50	9.58	15.65	-8.80
12	2	D10K: D10K: Other PT Losses	7.91	18.69	18.60	9.44	9.53	15.38	-8.22
13	0	D10K: D10K: Other PT Losses	6.90	18.35	18.26	8.53	8.61	14.84	-10.24
13	1	D10K: D10K: Other PT Losses	6.90	12.08	11.99	7.61	7.70	10.47	-0.81
13	2	D10K: D10K: Other PT Losses	6.90	6.73	6.64	6.83	6.92	6.75	7.24
14	0	D10K: D10K: Other PT Losses	6.90	6.73	6.64	6.83	6.92	6.75	7.24
14	1	D10K: D10K: Other PT Losses	6.91	-4.07	-4.17	5.25	5.34	-0.77	23.49
14	2	D10K: D10K: Other PT Losses	6.91	-5.68	-5.79	5.01	5.12	-1.89	25.93
15	0	D10K: D10K: Other PT Losses	6.91	-5.68	-5.79	5.01	5.12	-1.89	25.93
15	1	D10K: D10K: Other PT Losses	6.92	1.89	1.77	6.11	6.23	3.38	14.56
15	2	D10K: D10K: Other PT Losses	6.92	18.64	18.52	8.56	8.69	15.04	-10.61
16	0	D10K: D10K: Other PT Losses	6.92	18.64	18.52	8.56	8.69	15.04	-10.61
16	1	D10K: D10K: Other PT Losses	6.92	21.19	21.06	8.93	9.06	16.81	-14.43
16	2	D10K: D10K: Other PT Losses	6.92	23.86	23.74	9.33	9.45	18.67	-18.45

MEMBER STRESSES

DECK & CANOPY MEMBERS
D10K

(-) compression

			LIVE LOAD ON MAIN SPAN (LL2)						
Member	Station	Result Case	(P/A) @ Centroid (kips/ft²)	Normal Stress @ Point 1 (kips/ft²)	Normal Stress @ Point 2 (kips/ft²)	Normal Stress @ Point 3 (kips/ft²)	Normal Stress @ Point 4 (kips/ft²)	Normal Stress @ Point 5 (kips/ft²)	Normal Stress @ Point 6 (kips/ft²)
17	0	D10K: D10K: Other PT Losses	6.82	21.76	21.63	8.93	9.06	17.18	-15.54
17	1	D10K: D10K: Other PT Losses	6.82	23.02	22.89	9.12	9.25	18.05	-17.43
17	2	D10K: D10K: Other PT Losses	6.82	24.30	24.17	9.31	9.43	18.94	-19.35
18	0	D10K: D10K: Other PT Losses	3.92	21.80	21.67	6.46	6.59	16.32	-22.84
18	1	D10K: D10K: Other PT Losses	3.92	15.97	15.84	5.61	5.74	12.26	-14.08
18	2	D10K: D10K: Other PT Losses	3.93	10.74	10.61	4.85	4.98	8.62	-6.21
19	0	D10K: D10K: Other PT Losses	3.93	10.74	10.61	4.85	4.98	8.62	-6.21
19	1	D10K: D10K: Other PT Losses	3.93	-4.91	-5.05	2.56	2.70	-2.27	17.32
19	2	D10K: D10K: Other PT Losses	3.93	-9.73	-9.88	1.85	2.00	-5.63	24.59
20	0	D10K: D10K: Other PT Losses	3.93	-9.73	-9.88	1.85	2.00	-5.63	24.59
20	1	D10K: D10K: Other PT Losses	3.94	-3.72	-3.88	2.73	2.89	-1.45	15.58
20	2	D10K: D10K: Other PT Losses	3.94	13.11	12.94	5.19	5.36	10.27	-9.71
21	0	D10K: D10K: Other PT Losses	3.94	13.11	12.94	5.19	5.36	10.27	-9.71
21	1	D10K: D10K: Other PT Losses	3.94	17.20	17.03	5.78	5.96	13.11	-15.85
21	2	D10K: D10K: Other PT Losses	3.94	21.63	21.45	6.43	6.60	16.19	-22.50
22	0	D10K: D10K: Other PT Losses	2.58	18.29	18.11	4.78	4.95	13.45	-20.90
22	1	D10K: D10K: Other PT Losses	2.58	21.11	20.94	5.19	5.36	15.42	-25.14
22	2	D10K: D10K: Other PT Losses	2.58	23.96	23.79	5.61	5.78	17.40	-29.42
23	0	D10K: D10K: Other PT Losses	-0.31	20.21	20.04	2.59	2.77	13.92	-31.02
23	1	D10K: D10K: Other PT Losses	-0.31	16.11	15.93	1.99	2.17	11.06	-24.85
23	2	D10K: D10K: Other PT Losses	-0.31	12.28	12.11	1.43	1.61	8.39	-19.09
24	0	D10K: D10K: Other PT Losses	-0.31	12.28	12.11	1.43	1.61	8.39	-19.09
24	1	D10K: D10K: Other PT Losses	-0.30	-6.22	-6.41	-1.27	-1.09	-4.49	8.75
24	2	D10K: D10K: Other PT Losses	-0.30	-12.33	-12.52	-2.17	-1.97	-8.74	17.94
25	0	D10K: D10K: Other PT Losses	-0.30	-12.33	-12.52	-2.17	-1.97	-8.74	17.94
25	1	D10K: D10K: Other PT Losses	-0.29	-6.02	-6.22	-1.25	-1.04	-4.35	8.48
25	2	D10K: D10K: Other PT Losses	-0.29	12.71	12.49	1.49	1.71	8.68	-19.66
26	0	D10K: D10K: Other PT Losses	-0.29	12.71	12.49	1.49	1.71	8.68	-19.66
26	1	D10K: D10K: Other PT Losses	-0.29	19.51	19.29	2.48	2.70	13.42	-29.88
26	2	D10K: D10K: Other PT Losses	-0.28	27.13	26.91	3.60	3.82	18.72	-41.32
29	0	D10K: D10K: Other PT Losses	-5.53	-7.07	-7.24	-5.85	-5.68	-6.66	-3.08
29	1	D10K: D10K: Other PT Losses	-5.53	-6.80	-6.96	-5.81	-5.64	-6.47	-3.49
29	2	D10K: D10K: Other PT Losses	-5.53	-6.53	-6.69	-5.77	-5.61	-6.28	-3.90
30	0	D10K: D10K: Other PT Losses	-5.53	-6.53	-6.69	-5.77	-5.61	-6.28	-3.90
30	1	D10K: D10K: Other PT Losses	-5.53	-5.48	-5.62	-5.60	-5.46	-5.54	-5.49
30	2	D10K: D10K: Other PT Losses	-5.53	-4.43	-4.56	-5.44	-5.31	-4.81	-7.08
31	0	D10K: D10K: Other PT Losses	-5.53	-4.43	-4.56	-5.44	-5.31	-4.81	-7.08
31	1	D10K: D10K: Other PT Losses	-5.53	-3.38	-3.50	-5.28	-5.16	-4.07	-8.67
31	2	D10K: D10K: Other PT Losses	-5.53	-2.33	-2.43	-5.12	-5.01	-3.34	-10.26
32	0	D10K: D10K: Other PT Losses	-5.53	-2.33	-2.43	-5.12	-5.01	-3.34	-10.26
32	1	D10K: D10K: Other PT Losses	-5.53	-2.17	-2.28	-5.10	-4.99	-3.23	-10.49
32	2	D10K: D10K: Other PT Losses	-5.53	-2.02	-2.12	-5.07	-4.97	-3.12	-10.73
33	0	D10K: D10K: Other PT Losses	-5.47	-1.95	-2.05	-5.01	-4.91	-3.05	-10.69
33	1	D10K: D10K: Other PT Losses	-5.47	-1.97	-2.07	-5.02	-4.91	-3.07	-10.66
33	2	D10K: D10K: Other PT Losses	-5.47	-1.99	-2.09	-5.02	-4.92	-3.08	-10.63
34	0	D10K: D10K: Other PT Losses	-5.46	-1.78	-1.88	-4.98	-4.88	-2.94	-10.91
34	1	D10K: D10K: Other PT Losses	-5.46	-1.83	-1.93	-4.99	-4.89	-2.97	-10.84
34	2	D10K: D10K: Other PT Losses	-5.46	-1.88	-1.98	-4.99	-4.90	-3.00	-10.77

MEMBER STRESSES

DECK & CANOPY MEMBERS
D10K

(-) compression

			LIVE LOAD ON MAIN SPAN (LL2)						
Member	Station	Result Case	(P/A) @ Centroid (kips/ft²)	Normal Stress @ Point 1 (kips/ft²)	Normal Stress @ Point 2 (kips/ft²)	Normal Stress @ Point 3 (kips/ft²)	Normal Stress @ Point 4 (kips/ft²)	Normal Stress @ Point 5 (kips/ft²)	Normal Stress @ Point 6 (kips/ft²)
35	0	D10K: D10K: Other PT Losses	-5.46	-1.88	-1.98	-4.99	-4.90	-3.00	-10.77
35	1	D10K: D10K: Other PT Losses	-5.46	-2.03	-2.12	-5.01	-4.92	-3.11	-10.55
35	2	D10K: D10K: Other PT Losses	-5.46	-2.18	-2.27	-5.03	-4.94	-3.21	-10.33
36	0	D10K: D10K: Other PT Losses	-5.46	-2.18	-2.27	-5.03	-4.94	-3.21	-10.33
36	1	D10K: D10K: Other PT Losses	-5.46	-2.33	-2.42	-5.05	-4.97	-3.31	-10.10
36	2	D10K: D10K: Other PT Losses	-5.46	-2.48	-2.56	-5.07	-4.99	-3.41	-9.88
37	0	D10K: D10K: Other PT Losses	-5.46	-2.48	-2.56	-5.07	-4.99	-3.41	-9.88
37	1	D10K: D10K: Other PT Losses	-5.46	-2.56	-2.64	-5.08	-5.00	-3.47	-9.77
37	2	D10K: D10K: Other PT Losses	-5.46	-2.63	-2.71	-5.09	-5.02	-3.52	-9.65
38	0	D10K: D10K: Other PT Losses	-4.86	-1.46	-1.54	-4.40	-4.33	-2.52	-9.90
38	1	D10K: D10K: Other PT Losses	-4.86	-1.79	-1.86	-4.45	-4.37	-2.75	-9.41
38	2	D10K: D10K: Other PT Losses	-4.86	-2.11	-2.19	-4.50	-4.42	-2.97	-8.92
39	0	D10K: D10K: Other PT Losses	-4.92	-0.81	-0.88	-4.36	-4.29	-2.08	-11.04
39	1	D10K: D10K: Other PT Losses	-4.92	-0.92	-0.99	-4.38	-4.30	-2.16	-10.88
39	2	D10K: D10K: Other PT Losses	-4.92	-1.03	-1.10	-4.39	-4.32	-2.23	-10.72
40	0	D10K: D10K: Other PT Losses	-4.92	-1.03	-1.10	-4.39	-4.32	-2.23	-10.72
40	1	D10K: D10K: Other PT Losses	-4.92	-1.35	-1.42	-4.44	-4.37	-2.46	-10.23
40	2	D10K: D10K: Other PT Losses	-4.92	-1.67	-1.74	-4.48	-4.42	-2.68	-9.75
41	0	D10K: D10K: Other PT Losses	-4.92	-1.67	-1.74	-4.48	-4.42	-2.68	-9.75
41	1	D10K: D10K: Other PT Losses	-4.92	-2.00	-2.06	-4.53	-4.47	-2.91	-9.26
41	2	D10K: D10K: Other PT Losses	-4.92	-2.33	-2.38	-4.57	-4.52	-3.13	-8.77
42	0	D10K: D10K: Other PT Losses	-4.92	-2.33	-2.38	-4.57	-4.52	-3.13	-8.77
42	1	D10K: D10K: Other PT Losses	-4.92	-2.53	-2.58	-4.60	-4.55	-3.27	-8.47
42	2	D10K: D10K: Other PT Losses	-4.92	-2.73	-2.78	-4.63	-4.58	-3.41	-8.17
43	0	D10K: D10K: Other PT Losses	-3.69	-0.50	-0.56	-3.25	-3.20	-1.49	-8.44
43	1	D10K: D10K: Other PT Losses	-3.69	-1.10	-1.15	-3.34	-3.29	-1.90	-7.55
43	2	D10K: D10K: Other PT Losses	-3.69	-1.69	-1.74	-3.43	-3.38	-2.32	-6.66
44	0	D10K: D10K: Other PT Losses	-3.94	0.66	0.61	-3.30	-3.25	-0.76	-10.82
44	1	D10K: D10K: Other PT Losses	-3.94	0.52	0.47	-3.32	-3.27	-0.85	-10.62
44	2	D10K: D10K: Other PT Losses	-3.94	0.38	0.33	-3.34	-3.29	-0.95	-10.41
45	0	D10K: D10K: Other PT Losses	-3.94	0.38	0.33	-3.34	-3.29	-0.95	-10.41
45	1	D10K: D10K: Other PT Losses	-3.94	-0.01	-0.06	-3.39	-3.35	-1.22	-9.82
45	2	D10K: D10K: Other PT Losses	-3.94	-0.40	-0.44	-3.45	-3.41	-1.49	-9.24
46	0	D10K: D10K: Other PT Losses	-3.94	-0.40	-0.44	-3.45	-3.41	-1.49	-9.24
46	1	D10K: D10K: Other PT Losses	-3.94	-0.79	-0.83	-3.50	-3.47	-1.76	-8.66
46	2	D10K: D10K: Other PT Losses	-3.94	-1.18	-1.21	-3.56	-3.53	-2.03	-8.07
47	0	D10K: D10K: Other PT Losses	-3.94	-1.18	-1.21	-3.56	-3.53	-2.03	-8.07
47	1	D10K: D10K: Other PT Losses	-3.94	-1.46	-1.49	-3.60	-3.57	-2.22	-7.66
47	2	D10K: D10K: Other PT Losses	-3.94	-1.74	-1.76	-3.64	-3.61	-2.42	-7.24
48	0	D10K: D10K: Other PT Losses	-2.19	1.58	1.55	-1.66	-1.63	0.42	-7.83
48	1	D10K: D10K: Other PT Losses	-2.19	0.80	0.77	-1.77	-1.74	-0.12	-6.67
48	2	D10K: D10K: Other PT Losses	-2.19	0.03	0.00	-1.88	-1.85	-0.66	-5.50
49	0	D10K: D10K: Other PT Losses	-2.65	3.11	3.08	-1.82	-1.80	1.35	-11.28
49	1	D10K: D10K: Other PT Losses	-2.65	2.87	2.85	-1.86	-1.83	1.18	-10.93
49	2	D10K: D10K: Other PT Losses	-2.65	2.64	2.61	-1.89	-1.87	1.02	-10.58
50	0	D10K: D10K: Other PT Losses	-2.65	2.64	2.61	-1.89	-1.87	1.02	-10.58
50	1	D10K: D10K: Other PT Losses	-2.65	2.02	2.00	-1.98	-1.96	0.59	-9.66
50	2	D10K: D10K: Other PT Losses	-2.65	1.40	1.39	-2.07	-2.05	0.17	-8.73

MEMBER STRESSES

DECK & CANOPY MEMBERS
D10K

(-) compression

			LIVE LOAD ON MAIN SPAN (LL2)						
Member	Station	Result Case	(P/A) @ Centroid (kips/ft²)	Normal Stress @ Point 1 (kips/ft²)	Normal Stress @ Point 2 (kips/ft²)	Normal Stress @ Point 3 (kips/ft²)	Normal Stress @ Point 4 (kips/ft²)	Normal Stress @ Point 5 (kips/ft²)	Normal Stress @ Point 6 (kips/ft²)
51	0	D10K: D10K: Other PT Losses	-2.65	1.40	1.39	-2.07	-2.05	0.17	-8.73
51	1	D10K: D10K: Other PT Losses	-2.65	0.79	0.77	-2.16	-2.14	-0.26	-7.81
51	2	D10K: D10K: Other PT Losses	-2.65	0.17	0.16	-2.24	-2.23	-0.69	-6.88
52	0	D10K: D10K: Other PT Losses	-2.65	0.17	0.16	-2.24	-2.23	-0.69	-6.88
52	1	D10K: D10K: Other PT Losses	-2.65	-0.32	-0.33	-2.31	-2.31	-1.03	-6.15
52	2	D10K: D10K: Other PT Losses	-2.65	-0.81	-0.81	-2.38	-2.38	-1.37	-5.42
60	0	D10K: D10K: Other PT Losses	0.00	0.00	0.00	0.00	0.00	0.00	0.00
60	1	D10K: D10K: Other PT Losses	0.00	0.00	0.00	0.00	0.00	0.00	0.00
60	2	D10K: D10K: Other PT Losses	0.00	0.00	0.00	0.00	0.00	0.00	0.00
101	0	D10K: D10K: Other PT Losses	0.00	0.00	0.00	0.00	0.00	0.00	0.00
101	1	D10K: D10K: Other PT Losses	0.00	0.00	0.00	0.00	0.00	0.00	0.00
101	2	D10K: D10K: Other PT Losses	0.00	0.00	0.00	0.00	0.00	0.00	0.00
102	0	D10K: D10K: Other PT Losses	0.00	0.00	0.00	0.00	0.00	0.00	0.00
102	1	D10K: D10K: Other PT Losses	0.00	0.00	0.00	0.00	0.00	0.00	0.00
102	2	D10K: D10K: Other PT Losses	0.00	0.00	0.00	0.00	0.00	0.00	0.00
103	0	D10K: D10K: Other PT Losses	0.00	0.00	0.00	0.00	0.00	0.00	0.00
103	1	D10K: D10K: Other PT Losses	0.00	0.00	0.00	0.00	0.00	0.00	0.00
103	2	D10K: D10K: Other PT Losses	0.00	0.00	0.00	0.00	0.00	0.00	0.00
104	0	D10K: D10K: Other PT Losses	0.00	0.00	0.00	0.00	0.00	0.00	0.00
104	1	D10K: D10K: Other PT Losses	0.00	0.00	0.00	0.00	0.00	0.00	0.00
104	2	D10K: D10K: Other PT Losses	0.00	0.00	0.00	0.00	0.00	0.00	0.00
106	0	D10K: D10K: Other PT Losses	-16.75	5.99	5.99	-41.71	-41.71	0.92	-21.43
106	1	D10K: D10K: Other PT Losses	-16.75	4.43	4.43	-40.01	-40.00	-0.29	-21.11
106	2	D10K: D10K: Other PT Losses	-16.75	2.88	2.87	-38.30	-38.29	-1.50	-20.79
107	0	D10K: D10K: Other PT Losses	-16.75	2.88	2.87	-38.30	-38.29	-1.50	-20.79
107	1	D10K: D10K: Other PT Losses	-16.75	-6.42	-6.43	-28.09	-28.08	-8.73	-18.87
107	2	D10K: D10K: Other PT Losses	-16.75	-15.73	-15.73	-17.87	-17.87	-15.96	-16.96
108	0	D10K: D10K: Other PT Losses	-16.75	-15.73	-15.73	-17.87	-17.87	-15.96	-16.96
108	1	D10K: D10K: Other PT Losses	-16.75	-24.54	-24.55	-8.20	-8.19	-22.81	-15.15
108	2	D10K: D10K: Other PT Losses	-16.75	-33.35	-33.36	1.48	1.49	-29.66	-13.33
109	0	D10K: D10K: Other PT Losses	-16.75	-33.35	-33.36	1.48	1.49	-29.66	-13.33
109	1	D10K: D10K: Other PT Losses	-16.75	-36.56	-36.57	5.00	5.01	-32.15	-12.67
109	2	D10K: D10K: Other PT Losses	-16.75	-39.77	-39.78	8.52	8.54	-34.64	-12.01
111	0	D10K: D10K: Other PT Losses	-23.30	-32.58	-32.60	-13.11	-13.10	-30.52	-21.39
111	1	D10K: D10K: Other PT Losses	-23.30	-32.17	-32.18	-13.57	-13.55	-30.20	-21.48
111	2	D10K: D10K: Other PT Losses	-23.30	-31.75	-31.77	-14.03	-14.01	-29.87	-21.56
112	0	D10K: D10K: Other PT Losses	-23.30	-31.75	-31.77	-14.03	-14.01	-29.87	-21.56
112	1	D10K: D10K: Other PT Losses	-23.30	-30.06	-30.08	-15.88	-15.86	-28.56	-21.91
112	2	D10K: D10K: Other PT Losses	-23.30	-28.37	-28.40	-17.73	-17.71	-27.25	-22.26
113	0	D10K: D10K: Other PT Losses	-23.30	-28.37	-28.40	-17.73	-17.71	-27.25	-22.26
113	1	D10K: D10K: Other PT Losses	-23.30	-26.51	-26.53	-19.78	-19.76	-25.80	-22.64
113	2	D10K: D10K: Other PT Losses	-23.30	-24.64	-24.67	-21.83	-21.80	-24.35	-23.02
114	0	D10K: D10K: Other PT Losses	-23.30	-24.64	-24.67	-21.83	-21.80	-24.35	-23.02
114	1	D10K: D10K: Other PT Losses	-23.30	-24.24	-24.27	-22.27	-22.24	-24.04	-23.11
114	2	D10K: D10K: Other PT Losses	-23.30	-23.84	-23.87	-22.71	-22.68	-23.73	-23.19
116	0	D10K: D10K: Other PT Losses	-22.65	-31.59	-31.62	-12.83	-12.81	-29.61	-20.81
116	1	D10K: D10K: Other PT Losses	-22.65	-31.05	-31.08	-13.42	-13.40	-29.19	-20.92
116	2	D10K: D10K: Other PT Losses	-22.65	-30.51	-30.55	-14.01	-13.98	-28.77	-21.03

MEMBER STRESSES

DECK & CANOPY MEMBERS
D10K

(-) compression

			LIVE LOAD ON MAIN SPAN (LL2)						
Member	Station	Result Case	(P/A) @ Centroid (kips/ft²)	Normal Stress @ Point 1 (kips/ft²)	Normal Stress @ Point 2 (kips/ft²)	Normal Stress @ Point 3 (kips/ft²)	Normal Stress @ Point 4 (kips/ft²)	Normal Stress @ Point 5 (kips/ft²)	Normal Stress @ Point 6 (kips/ft²)
117	0	D10K: D10K: Other PT Losses	-22.65	-30.51	-30.55	-14.01	-13.98	-28.77	-21.03
117	1	D10K: D10K: Other PT Losses	-22.65	-27.49	-27.52	-17.34	-17.31	-26.42	-21.65
117	2	D10K: D10K: Other PT Losses	-22.65	-24.46	-24.50	-20.66	-20.63	-24.07	-22.27
118	0	D10K: D10K: Other PT Losses	-22.65	-24.46	-24.50	-20.66	-20.63	-24.07	-22.27
118	1	D10K: D10K: Other PT Losses	-22.65	-21.32	-21.36	-24.11	-24.07	-21.63	-22.92
118	2	D10K: D10K: Other PT Losses	-22.65	-18.17	-18.22	-27.56	-27.52	-19.19	-23.57
119	0	D10K: D10K: Other PT Losses	-22.65	-18.17	-18.22	-27.56	-27.52	-19.19	-23.57
119	1	D10K: D10K: Other PT Losses	-22.65	-17.61	-17.65	-28.18	-28.14	-18.75	-23.68
119	2	D10K: D10K: Other PT Losses	-22.65	-17.04	-17.09	-28.80	-28.76	-18.31	-23.80
121	0	D10K: D10K: Other PT Losses	-13.62	-22.10	-22.15	-4.31	-4.27	-20.23	-11.88
121	1	D10K: D10K: Other PT Losses	-13.62	-21.67	-21.72	-4.79	-4.75	-19.89	-11.96
121	2	D10K: D10K: Other PT Losses	-13.62	-21.23	-21.28	-5.27	-5.22	-19.56	-12.05
122	0	D10K: D10K: Other PT Losses	-13.62	-21.23	-21.28	-5.27	-5.22	-19.56	-12.05
122	1	D10K: D10K: Other PT Losses	-13.62	-17.93	-17.98	-8.90	-8.85	-16.99	-12.73
122	2	D10K: D10K: Other PT Losses	-13.62	-14.62	-14.67	-12.53	-12.48	-14.42	-13.42
123	0	D10K: D10K: Other PT Losses	-13.62	-14.62	-14.67	-12.53	-12.48	-14.42	-13.42
123	1	D10K: D10K: Other PT Losses	-13.62	-11.31	-11.36	-16.16	-16.11	-11.85	-14.10
123	2	D10K: D10K: Other PT Losses	-13.62	-8.00	-8.06	-19.80	-19.74	-9.27	-14.78
124	0	D10K: D10K: Other PT Losses	-13.62	-8.00	-8.06	-19.80	-19.74	-9.27	-14.78
124	1	D10K: D10K: Other PT Losses	-13.62	-7.62	-7.68	-20.21	-20.16	-8.98	-14.86
124	2	D10K: D10K: Other PT Losses	-13.62	-7.24	-7.30	-20.63	-20.58	-8.68	-14.93
126	0	D10K: D10K: Other PT Losses	2.02	-13.49	-13.55	19.06	19.11	-10.05	5.22
126	1	D10K: D10K: Other PT Losses	2.02	-11.79	-11.85	17.19	17.25	-8.74	4.87
126	2	D10K: D10K: Other PT Losses	2.02	-10.09	-10.15	15.33	15.38	-7.42	4.52
127	0	D10K: D10K: Other PT Losses	2.02	-10.09	-10.15	15.33	15.38	-7.42	4.52
127	1	D10K: D10K: Other PT Losses	2.02	-3.77	-3.84	8.39	8.45	-2.51	3.22
127	2	D10K: D10K: Other PT Losses	2.02	2.54	2.48	1.46	1.51	2.40	1.92
128	0	D10K: D10K: Other PT Losses	2.02	2.54	2.48	1.46	1.51	2.40	1.92
128	1	D10K: D10K: Other PT Losses	2.02	8.94	8.87	-5.57	-5.51	7.37	0.60
133	0	D10K: D10K: Other PT Losses	5.53	4.88	4.81	6.26	6.31	5.00	5.67
133	1	D10K: D10K: Other PT Losses	5.53	6.05	5.99	4.97	5.02	5.91	5.43
133	2	D10K: D10K: Other PT Losses	5.53	7.22	7.17	3.68	3.73	6.82	5.19
134	0	D10K: D10K: Other PT Losses	5.53	7.22	7.17	3.68	3.73	6.82	5.19
134	1	D10K: D10K: Other PT Losses	5.53	8.35	8.30	2.44	2.49	7.71	4.96
134	2	D10K: D10K: Other PT Losses	5.53	9.48	9.44	1.20	1.24	8.59	4.72
135	0	D10K: D10K: Other PT Losses	5.53	9.48	9.44	1.20	1.24	8.59	4.72
135	1	D10K: D10K: Other PT Losses	5.53	9.83	9.78	0.82	0.86	8.85	4.65
135	2	D10K: D10K: Other PT Losses	5.53	10.17	10.12	0.45	0.49	9.12	4.58
137	0	D10K: D10K: Other PT Losses	9.08	11.30	11.26	6.65	6.69	10.79	8.63
137	1	D10K: D10K: Other PT Losses	9.08	11.39	11.34	6.56	6.60	10.86	8.61
137	2	D10K: D10K: Other PT Losses	9.08	11.47	11.43	6.47	6.50	10.92	8.60
138	0	D10K: D10K: Other PT Losses	9.08	11.47	11.43	6.47	6.50	10.92	8.60
138	1	D10K: D10K: Other PT Losses	9.08	11.64	11.60	6.28	6.32	11.05	8.56
138	2	D10K: D10K: Other PT Losses	9.08	11.80	11.76	6.10	6.13	11.18	8.53
139	0	D10K: D10K: Other PT Losses	9.08	11.80	11.76	6.10	6.13	11.18	8.53
139	1	D10K: D10K: Other PT Losses	9.08	12.07	12.03	5.81	5.84	11.39	8.47
139	2	D10K: D10K: Other PT Losses	9.08	12.34	12.30	5.52	5.55	11.60	8.42

MEMBER STRESSES

DECK & CANOPY MEMBERS
D10K

(-) compression

			LIVE LOAD ON MAIN SPAN (LL2)						
Member	Station	Result Case	(P/A) @ Centroid (kips/ft²)	Normal Stress @ Point 1 (kips/ft²)	Normal Stress @ Point 2 (kips/ft²)	Normal Stress @ Point 3 (kips/ft²)	Normal Stress @ Point 4 (kips/ft²)	Normal Stress @ Point 5 (kips/ft²)	Normal Stress @ Point 6 (kips/ft²)
140	0	D10K: D10K: Other PT Losses	9.08	12.34	12.30	5.52	5.55	11.60	8.42
140	1	D10K: D10K: Other PT Losses	9.08	12.32	12.29	5.53	5.56	11.59	8.42
140	2	D10K: D10K: Other PT Losses	9.08	12.31	12.28	5.54	5.57	11.58	8.42
142	0	D10K: D10K: Other PT Losses	9.11	17.03	17.00	0.41	0.44	15.25	7.48
142	1	D10K: D10K: Other PT Losses	9.11	16.29	16.25	1.23	1.26	14.67	7.63
142	2	D10K: D10K: Other PT Losses	9.11	15.54	15.51	2.04	2.07	14.10	7.78
143	0	D10K: D10K: Other PT Losses	9.11	15.54	15.51	2.04	2.07	14.10	7.78
143	1	D10K: D10K: Other PT Losses	9.11	13.96	13.93	3.78	3.81	12.87	8.11
143	2	D10K: D10K: Other PT Losses	9.11	12.37	12.35	5.52	5.55	11.64	8.44
144	0	D10K: D10K: Other PT Losses	9.11	12.37	12.35	5.52	5.55	11.64	8.44
144	1	D10K: D10K: Other PT Losses	9.11	10.75	10.73	7.30	7.33	10.38	8.77
144	2	D10K: D10K: Other PT Losses	9.11	9.13	9.11	9.08	9.10	9.12	9.10
145	0	D10K: D10K: Other PT Losses	9.11	9.13	9.11	9.08	9.10	9.12	9.10
145	1	D10K: D10K: Other PT Losses	9.11	8.60	8.57	9.66	9.69	8.70	9.21
145	2	D10K: D10K: Other PT Losses	9.11	8.07	8.04	10.25	10.27	8.29	9.32
147	0	D10K: D10K: Other PT Losses	7.58	21.03	21.01	-7.19	-7.17	18.02	4.81
147	1	D10K: D10K: Other PT Losses	7.58	19.28	19.26	-5.27	-5.25	16.67	5.17
147	2	D10K: D10K: Other PT Losses	7.58	17.54	17.51	-3.35	-3.33	15.31	5.53
148	0	D10K: D10K: Other PT Losses	7.58	17.54	17.51	-3.35	-3.33	15.31	5.53
148	1	D10K: D10K: Other PT Losses	7.58	14.34	14.32	0.15	0.17	12.83	6.19
148	2	D10K: D10K: Other PT Losses	7.58	11.15	11.13	3.66	3.67	10.35	6.84
149	0	D10K: D10K: Other PT Losses	7.58	11.15	11.13	3.66	3.67	10.35	6.84
149	1	D10K: D10K: Other PT Losses	7.58	7.77	7.75	7.37	7.38	7.72	7.54
149	2	D10K: D10K: Other PT Losses	7.58	4.39	4.37	11.08	11.09	5.09	8.24
150	0	D10K: D10K: Other PT Losses	7.58	4.39	4.37	11.08	11.09	5.09	8.23
150	1	D10K: D10K: Other PT Losses	7.58	3.33	3.32	12.24	12.25	4.27	8.45
150	2	D10K: D10K: Other PT Losses	7.58	2.28	2.26	13.39	13.41	3.45	8.67
152	0	D10K: D10K: Other PT Losses	4.89	25.09	25.07	-17.29	-17.28	20.58	0.73
152	1	D10K: D10K: Other PT Losses	4.89	21.21	21.20	-13.04	-13.02	17.57	1.53
152	2	D10K: D10K: Other PT Losses	4.89	17.33	17.32	-8.78	-8.76	14.55	2.33
153	0	D10K: D10K: Other PT Losses	4.89	17.33	17.32	-8.78	-8.77	14.55	2.32
153	1	D10K: D10K: Other PT Losses	4.89	11.00	10.98	-1.82	-1.81	9.63	3.63
153	2	D10K: D10K: Other PT Losses	4.89	4.66	4.65	5.13	5.15	4.71	4.93
154	0	D10K: D10K: Other PT Losses	4.89	4.66	4.65	5.13	5.15	4.71	4.93
154	1	D10K: D10K: Other PT Losses	4.89	-2.22	-2.23	12.69	12.70	-0.64	6.35
154	2	D10K: D10K: Other PT Losses	4.89	-9.10	-9.11	20.24	20.25	-5.99	7.77
155	0	D10K: D10K: Other PT Losses	4.88	-9.10	-9.11	20.24	20.25	-5.99	7.76
155	1	D10K: D10K: Other PT Losses	4.88	-11.25	-11.26	22.60	22.61	-7.66	8.21
155	2	D10K: D10K: Other PT Losses	4.88	-13.40	-13.41	24.96	24.97	-9.33	8.65
157	0	D10K: D10K: Other PT Losses	0.76	11.51	11.50	-11.03	-11.03	9.11	-1.45
157	1	D10K: D10K: Other PT Losses	0.76	9.67	9.66	-9.02	-9.01	7.68	-1.07
157	2	D10K: D10K: Other PT Losses	0.76	7.84	7.83	-7.00	-6.99	6.26	-0.69
158	0	D10K: D10K: Other PT Losses	0.76	7.84	7.83	-7.00	-6.99	6.26	-0.69
158	1	D10K: D10K: Other PT Losses	0.76	1.95	1.94	-0.54	-0.53	1.68	0.52
158	2	D10K: D10K: Other PT Losses	0.76	-3.94	-3.94	5.92	5.93	-2.89	1.73
159	0	D10K: D10K: Other PT Losses	0.76	-3.94	-3.94	5.92	5.93	-2.89	1.73
159	1	D10K: D10K: Other PT Losses	0.76	-9.90	-9.90	12.47	12.47	-7.53	2.96
159	2	D10K: D10K: Other PT Losses	0.76	-15.87	-15.87	19.02	19.02	-12.16	4.19

MEMBER STRESSES

DECK & CANOPY MEMBERS
D10K

(-) compression

			LIVE LOAD ON BACK SPAN (LL3)						
Member	Station	Result Case	(P/A) @ Centroid (kips/ft²)	Normal Stress @ Point 1 (kips/ft²)	Normal Stress @ Point 2 (kips/ft²)	Normal Stress @ Point 3 (kips/ft²)	Normal Stress @ Point 4 (kips/ft²)	Normal Stress @ Point 5 (kips/ft²)	Normal Stress @ Point 6 (kips/ft²)
1	0	D10K: D10K: Other PT Losses	0.00	0.00	0.00	0.00	0.00	0.00	0.00
1	1	D10K: D10K: Other PT Losses	0.00	0.00	0.00	0.00	0.00	0.00	0.00
1	2	D10K: D10K: Other PT Losses	0.00	0.00	0.00	0.00	0.00	0.00	0.00
2	0	D10K: D10K: Other PT Losses	0.03	-0.26	-0.26	-0.02	-0.01	-0.17	0.46
2	1	D10K: D10K: Other PT Losses	0.03	0.42	0.42	0.08	0.08	0.30	-0.56
2	2	D10K: D10K: Other PT Losses	0.03	1.09	1.09	0.18	0.18	0.77	-1.58
3	0	D10K: D10K: Other PT Losses	-1.01	-0.30	-0.30	-0.90	-0.90	-0.52	-2.06
3	1	D10K: D10K: Other PT Losses	-1.01	-0.34	-0.34	-0.91	-0.91	-0.54	-2.01
3	2	D10K: D10K: Other PT Losses	-1.01	-0.38	-0.37	-0.91	-0.92	-0.57	-1.95
4	0	D10K: D10K: Other PT Losses	-1.01	-0.38	-0.37	-0.91	-0.92	-0.57	-1.95
4	1	D10K: D10K: Other PT Losses	-1.01	-0.46	-0.45	-0.92	-0.93	-0.62	-1.83
4	2	D10K: D10K: Other PT Losses	-1.01	-0.54	-0.53	-0.93	-0.95	-0.68	-1.72
5	0	D10K: D10K: Other PT Losses	-1.01	-0.54	-0.53	-0.93	-0.95	-0.68	-1.72
5	1	D10K: D10K: Other PT Losses	-1.01	-0.62	-0.60	-0.94	-0.96	-0.73	-1.60
5	2	D10K: D10K: Other PT Losses	-1.01	-0.70	-0.68	-0.95	-0.97	-0.79	-1.48
6	0	D10K: D10K: Other PT Losses	-1.01	-0.70	-0.68	-0.95	-0.97	-0.79	-1.48
6	1	D10K: D10K: Other PT Losses	-1.01	-0.72	-0.69	-0.95	-0.97	-0.80	-1.46
6	2	D10K: D10K: Other PT Losses	-1.01	-0.73	-0.70	-0.95	-0.98	-0.80	-1.45
7	0	D10K: D10K: Other PT Losses	-0.92	-1.37	-1.34	-0.97	-1.00	-1.22	-0.28
7	1	D10K: D10K: Other PT Losses	-0.92	-1.00	-0.97	-0.92	-0.95	-0.97	-0.83
7	2	D10K: D10K: Other PT Losses	-0.92	-0.63	-0.60	-0.87	-0.89	-0.71	-1.39
8	0	D10K: D10K: Other PT Losses	-1.56	-1.35	-1.33	-1.51	-1.54	-1.41	-1.89
8	1	D10K: D10K: Other PT Losses	-1.56	-1.30	-1.28	-1.51	-1.53	-1.37	-1.97
8	2	D10K: D10K: Other PT Losses	-1.56	-1.26	-1.23	-1.50	-1.53	-1.34	-2.04
9	0	D10K: D10K: Other PT Losses	-1.56	-1.26	-1.23	-1.50	-1.53	-1.34	-2.04
9	1	D10K: D10K: Other PT Losses	-1.56	-1.13	-1.10	-1.48	-1.51	-1.25	-2.23
9	2	D10K: D10K: Other PT Losses	-1.56	-1.01	-0.97	-1.46	-1.50	-1.16	-2.42
10	0	D10K: D10K: Other PT Losses	-1.56	-1.01	-0.97	-1.46	-1.50	-1.16	-2.42
10	1	D10K: D10K: Other PT Losses	-1.56	-0.89	-0.84	-1.44	-1.48	-1.08	-2.61
10	2	D10K: D10K: Other PT Losses	-1.56	-0.76	-0.71	-1.42	-1.46	-0.99	-2.80
11	0	D10K: D10K: Other PT Losses	-1.56	-0.76	-0.71	-1.42	-1.46	-0.99	-2.80
11	1	D10K: D10K: Other PT Losses	-1.56	-0.75	-0.70	-1.41	-1.46	-0.98	-2.82
11	2	D10K: D10K: Other PT Losses	-1.56	-0.73	-0.68	-1.41	-1.46	-0.96	-2.85
12	0	D10K: D10K: Other PT Losses	-1.57	-1.28	-1.23	-1.50	-1.55	-1.35	-2.06
12	1	D10K: D10K: Other PT Losses	-1.57	-1.04	-0.99	-1.47	-1.52	-1.19	-2.41
12	2	D10K: D10K: Other PT Losses	-1.57	-0.81	-0.76	-1.43	-1.48	-1.02	-2.77
13	0	D10K: D10K: Other PT Losses	-1.94	-1.25	-1.20	-1.81	-1.86	-1.44	-3.01
13	1	D10K: D10K: Other PT Losses	-1.94	-1.26	-1.21	-1.81	-1.86	-1.45	-2.99
13	2	D10K: D10K: Other PT Losses	-1.94	-1.27	-1.21	-1.81	-1.86	-1.45	-2.98
14	0	D10K: D10K: Other PT Losses	-1.94	-1.27	-1.21	-1.81	-1.86	-1.45	-2.98
14	1	D10K: D10K: Other PT Losses	-1.94	-1.30	-1.24	-1.81	-1.87	-1.47	-2.94
14	2	D10K: D10K: Other PT Losses	-1.94	-1.33	-1.27	-1.81	-1.87	-1.49	-2.89
15	0	D10K: D10K: Other PT Losses	-1.94	-1.33	-1.27	-1.81	-1.87	-1.49	-2.89
15	1	D10K: D10K: Other PT Losses	-1.94	-1.36	-1.29	-1.81	-1.88	-1.51	-2.85
15	2	D10K: D10K: Other PT Losses	-1.94	-1.39	-1.32	-1.81	-1.89	-1.53	-2.81
16	0	D10K: D10K: Other PT Losses	-1.94	-1.39	-1.32	-1.81	-1.89	-1.53	-2.81
16	1	D10K: D10K: Other PT Losses	-1.94	-1.39	-1.32	-1.81	-1.89	-1.53	-2.81
16	2	D10K: D10K: Other PT Losses	-1.94	-1.40	-1.32	-1.81	-1.89	-1.53	-2.80

MEMBER STRESSES

DECK & CANOPY MEMBERS
D10K

(-) compression

			LIVE LOAD ON BACK SPAN (LL3)						
Member	Station	Result Case	(P/A) @ Centroid (kips/ft²)	Normal Stress @ Point 1 (kips/ft²)	Normal Stress @ Point 2 (kips/ft²)	Normal Stress @ Point 3 (kips/ft²)	Normal Stress @ Point 4 (kips/ft²)	Normal Stress @ Point 5 (kips/ft²)	Normal Stress @ Point 6 (kips/ft²)
17	0	D10K: D10K: Other PT Losses	-1.96	-1.52	-1.44	-1.85	-1.93	-1.63	-2.68
17	1	D10K: D10K: Other PT Losses	-1.96	-1.46	-1.38	-1.84	-1.92	-1.58	-2.77
17	2	D10K: D10K: Other PT Losses	-1.96	-1.40	-1.32	-1.83	-1.91	-1.54	-2.86
18	0	D10K: D10K: Other PT Losses	-2.03	-1.54	-1.46	-1.92	-1.99	-1.66	-2.83
18	1	D10K: D10K: Other PT Losses	-2.03	-1.53	-1.46	-1.91	-1.99	-1.66	-2.84
18	2	D10K: D10K: Other PT Losses	-2.03	-1.53	-1.45	-1.91	-1.99	-1.65	-2.85
19	0	D10K: D10K: Other PT Losses	-2.03	-1.53	-1.45	-1.91	-1.99	-1.65	-2.85
19	1	D10K: D10K: Other PT Losses	-2.03	-1.50	-1.42	-1.91	-1.99	-1.64	-2.88
19	2	D10K: D10K: Other PT Losses	-2.03	-1.48	-1.39	-1.90	-1.99	-1.62	-2.92
20	0	D10K: D10K: Other PT Losses	-2.03	-1.48	-1.39	-1.90	-1.99	-1.62	-2.92
20	1	D10K: D10K: Other PT Losses	-2.03	-1.46	-1.36	-1.89	-1.99	-1.60	-2.96
20	2	D10K: D10K: Other PT Losses	-2.03	-1.43	-1.34	-1.89	-1.99	-1.58	-3.00
21	0	D10K: D10K: Other PT Losses	-2.03	-1.43	-1.34	-1.89	-1.99	-1.58	-3.00
21	1	D10K: D10K: Other PT Losses	-2.03	-1.43	-1.33	-1.89	-1.98	-1.58	-3.01
21	2	D10K: D10K: Other PT Losses	-2.03	-1.42	-1.32	-1.88	-1.98	-1.57	-3.02
22	0	D10K: D10K: Other PT Losses	-1.90	-1.22	-1.12	-1.75	-1.85	-1.40	-3.00
22	1	D10K: D10K: Other PT Losses	-1.90	-1.38	-1.28	-1.77	-1.87	-1.50	-2.76
22	2	D10K: D10K: Other PT Losses	-1.90	-1.54	-1.44	-1.79	-1.89	-1.61	-2.53
23	0	D10K: D10K: Other PT Losses	-1.79	-1.31	-1.21	-1.66	-1.76	-1.42	-2.58
23	1	D10K: D10K: Other PT Losses	-1.79	-1.33	-1.23	-1.66	-1.77	-1.43	-2.56
23	2	D10K: D10K: Other PT Losses	-1.79	-1.34	-1.24	-1.67	-1.77	-1.44	-2.54
24	0	D10K: D10K: Other PT Losses	-1.79	-1.34	-1.24	-1.67	-1.77	-1.44	-2.54
24	1	D10K: D10K: Other PT Losses	-1.79	-1.43	-1.32	-1.68	-1.78	-1.50	-2.41
24	2	D10K: D10K: Other PT Losses	-1.79	-1.52	-1.41	-1.69	-1.80	-1.56	-2.28
25	0	D10K: D10K: Other PT Losses	-1.79	-1.52	-1.41	-1.69	-1.80	-1.56	-2.28
25	1	D10K: D10K: Other PT Losses	-1.79	-1.61	-1.49	-1.70	-1.82	-1.63	-2.15
25	2	D10K: D10K: Other PT Losses	-1.79	-1.70	-1.58	-1.71	-1.83	-1.69	-2.01
26	0	D10K: D10K: Other PT Losses	-1.79	-1.70	-1.58	-1.71	-1.83	-1.69	-2.01
26	1	D10K: D10K: Other PT Losses	-1.79	-1.73	-1.60	-1.71	-1.83	-1.70	-1.98
26	2	D10K: D10K: Other PT Losses	-1.79	-1.75	-1.62	-1.71	-1.84	-1.72	-1.95
29	0	D10K: D10K: Other PT Losses	0.72	24.90	25.07	4.36	4.19	17.61	-35.75
29	1	D10K: D10K: Other PT Losses	0.73	17.15	17.31	3.22	3.06	12.21	-24.09
29	2	D10K: D10K: Other PT Losses	0.73	10.22	10.38	2.21	2.05	7.39	-13.67
30	0	D10K: D10K: Other PT Losses	0.73	10.22	10.38	2.21	2.05	7.39	-13.67
30	1	D10K: D10K: Other PT Losses	0.73	-8.78	-8.63	-0.57	-0.72	-5.83	14.91
30	2	D10K: D10K: Other PT Losses	0.74	-15.35	-15.22	-1.54	-1.67	-10.42	24.82
31	0	D10K: D10K: Other PT Losses	0.74	-15.35	-15.22	-1.54	-1.67	-10.42	24.82
31	1	D10K: D10K: Other PT Losses	0.74	-9.51	-9.39	-0.69	-0.81	-6.35	16.06
31	2	D10K: D10K: Other PT Losses	0.74	8.75	8.86	1.98	1.87	6.36	-11.37
32	0	D10K: D10K: Other PT Losses	0.74	8.75	8.86	1.98	1.87	6.36	-11.37
32	1	D10K: D10K: Other PT Losses	0.75	12.48	12.58	2.52	2.42	8.95	-16.97
32	2	D10K: D10K: Other PT Losses	0.75	16.47	16.57	3.10	3.00	11.72	-22.96
33	0	D10K: D10K: Other PT Losses	1.78	16.39	16.50	3.97	3.87	11.99	-20.27
33	1	D10K: D10K: Other PT Losses	1.78	16.24	16.35	3.95	3.85	11.88	-20.05
33	2	D10K: D10K: Other PT Losses	1.78	16.10	16.20	3.93	3.83	11.78	-19.83
34	0	D10K: D10K: Other PT Losses	1.77	15.31	15.41	3.81	3.71	11.23	-18.66
34	1	D10K: D10K: Other PT Losses	1.77	13.36	13.47	3.53	3.42	9.88	-15.73
34	2	D10K: D10K: Other PT Losses	1.77	11.56	11.66	3.26	3.16	8.62	-13.01

MEMBER STRESSES

DECK & CANOPY MEMBERS
D10K

(-) compression

			LIVE LOAD ON BACK SPAN (LL3)						
Member	Station	Result Case	(P/A) @ Centroid (kips/ft²)	Normal Stress @ Point 1 (kips/ft²)	Normal Stress @ Point 2 (kips/ft²)	Normal Stress @ Point 3 (kips/ft²)	Normal Stress @ Point 4 (kips/ft²)	Normal Stress @ Point 5 (kips/ft²)	Normal Stress @ Point 6 (kips/ft²)
35	0	D10K: D10K: Other PT Losses	1.77	11.56	11.66	3.26	3.16	8.62	-13.01
35	1	D10K: D10K: Other PT Losses	1.78	6.84	6.93	2.57	2.47	5.33	-5.91
35	2	D10K: D10K: Other PT Losses	1.78	3.43	3.52	2.07	1.98	2.96	-0.78
36	0	D10K: D10K: Other PT Losses	1.78	3.43	3.52	2.07	1.98	2.96	-0.78
36	1	D10K: D10K: Other PT Losses	1.78	1.34	1.42	1.76	1.68	1.50	2.37
36	2	D10K: D10K: Other PT Losses	1.78	0.56	0.64	1.65	1.57	0.96	3.55
37	0	D10K: D10K: Other PT Losses	1.78	0.56	0.64	1.65	1.57	0.96	3.55
37	1	D10K: D10K: Other PT Losses	1.78	0.68	0.76	1.67	1.59	1.04	3.38
37	2	D10K: D10K: Other PT Losses	1.78	1.15	1.22	1.73	1.66	1.37	2.68
38	0	D10K: D10K: Other PT Losses	1.87	1.40	1.48	1.84	1.77	1.57	2.50
38	1	D10K: D10K: Other PT Losses	1.87	1.44	1.52	1.85	1.77	1.60	2.45
38	2	D10K: D10K: Other PT Losses	1.87	1.48	1.55	1.85	1.78	1.62	2.39
39	0	D10K: D10K: Other PT Losses	1.95	1.54	1.61	1.94	1.86	1.69	2.52
39	1	D10K: D10K: Other PT Losses	1.95	0.57	0.64	1.79	1.72	1.01	3.98
39	2	D10K: D10K: Other PT Losses	1.95	-0.28	-0.21	1.67	1.60	0.43	5.26
40	0	D10K: D10K: Other PT Losses	1.95	-0.28	-0.21	1.67	1.60	0.43	5.26
40	1	D10K: D10K: Other PT Losses	1.96	-2.07	-2.00	1.41	1.34	-0.82	7.96
40	2	D10K: D10K: Other PT Losses	1.96	-2.78	-2.71	1.30	1.24	-1.31	9.02
41	0	D10K: D10K: Other PT Losses	1.96	-2.78	-2.71	1.30	1.24	-1.31	9.02
41	1	D10K: D10K: Other PT Losses	1.96	-2.39	-2.33	1.36	1.30	-1.05	8.45
41	2	D10K: D10K: Other PT Losses	1.96	-0.91	-0.85	1.57	1.51	-0.02	6.23
42	0	D10K: D10K: Other PT Losses	1.96	-0.91	-0.85	1.57	1.51	-0.02	6.23
42	1	D10K: D10K: Other PT Losses	1.96	0.55	0.61	1.79	1.73	1.00	4.04
42	2	D10K: D10K: Other PT Losses	1.96	2.43	2.48	2.06	2.01	2.31	1.21
43	0	D10K: D10K: Other PT Losses	1.74	1.66	1.71	1.76	1.71	1.70	1.83
43	1	D10K: D10K: Other PT Losses	1.74	1.98	2.03	1.81	1.76	1.92	1.35
43	2	D10K: D10K: Other PT Losses	1.74	2.30	2.35	1.85	1.80	2.15	0.87
44	0	D10K: D10K: Other PT Losses	2.03	1.35	1.40	1.96	1.91	1.57	3.01
44	1	D10K: D10K: Other PT Losses	2.03	0.33	0.38	1.81	1.76	0.86	4.55
44	2	D10K: D10K: Other PT Losses	2.03	-0.58	-0.53	1.68	1.63	0.23	5.91
45	0	D10K: D10K: Other PT Losses	2.03	-0.58	-0.53	1.68	1.63	0.23	5.91
45	1	D10K: D10K: Other PT Losses	2.03	-2.48	-2.43	1.40	1.35	-1.09	8.77
45	2	D10K: D10K: Other PT Losses	2.03	-3.43	-3.39	1.26	1.22	-1.75	10.21
46	0	D10K: D10K: Other PT Losses	2.03	-3.43	-3.39	1.26	1.22	-1.75	10.21
46	1	D10K: D10K: Other PT Losses	2.03	-3.44	-3.40	1.26	1.22	-1.76	10.24
46	2	D10K: D10K: Other PT Losses	2.04	-2.51	-2.48	1.39	1.36	-1.12	8.85
47	0	D10K: D10K: Other PT Losses	2.04	-2.51	-2.48	1.39	1.36	-1.12	8.85
47	1	D10K: D10K: Other PT Losses	2.04	-1.28	-1.25	1.57	1.54	-0.26	7.00
47	2	D10K: D10K: Other PT Losses	2.04	0.43	0.45	1.82	1.79	0.93	4.44
48	0	D10K: D10K: Other PT Losses	1.14	-1.63	-1.60	0.75	0.73	-0.78	5.29
48	1	D10K: D10K: Other PT Losses	1.14	-1.06	-1.04	0.84	0.81	-0.38	4.44
48	2	D10K: D10K: Other PT Losses	1.14	-0.49	-0.46	0.92	0.89	0.02	3.58
49	0	D10K: D10K: Other PT Losses	1.52	-2.58	-2.55	0.93	0.91	-1.32	7.65
49	1	D10K: D10K: Other PT Losses	1.52	-2.48	-2.45	0.95	0.92	-1.25	7.50
49	2	D10K: D10K: Other PT Losses	1.52	-2.26	-2.23	0.98	0.96	-1.10	7.17
50	0	D10K: D10K: Other PT Losses	1.52	-2.26	-2.23	0.98	0.96	-1.10	7.17
50	1	D10K: D10K: Other PT Losses	1.52	-1.09	-1.07	1.15	1.13	-0.29	5.43
50	2	D10K: D10K: Other PT Losses	1.52	0.90	0.92	1.44	1.42	1.10	2.43

MEMBER STRESSES

DECK & CANOPY MEMBERS
D10K

(-) compression

			LIVE LOAD ON BACK SPAN (LL3)						
Member	Station	Result Case	(P/A) @ Centroid (kips/ft²)	Normal Stress @ Point 1 (kips/ft²)	Normal Stress @ Point 2 (kips/ft²)	Normal Stress @ Point 3 (kips/ft²)	Normal Stress @ Point 4 (kips/ft²)	Normal Stress @ Point 5 (kips/ft²)	Normal Stress @ Point 6 (kips/ft²)
51	0	D10K: D10K: Other PT Losses	1.52	0.90	0.92	1.44	1.42	1.10	2.43
51	1	D10K: D10K: Other PT Losses	1.52	3.74	3.75	1.85	1.84	3.07	-1.82
51	2	D10K: D10K: Other PT Losses	1.52	7.41	7.42	2.39	2.38	5.62	-7.34
52	0	D10K: D10K: Other PT Losses	1.52	7.41	7.42	2.39	2.38	5.62	-7.34
52	1	D10K: D10K: Other PT Losses	1.52	10.92	10.93	2.90	2.89	8.07	-12.61
52	2	D10K: D10K: Other PT Losses	1.52	14.96	14.96	3.49	3.49	10.88	-18.67
60	0	D10K: D10K: Other PT Losses	0.00	0.00	0.00	0.00	0.00	0.00	0.00
60	1	D10K: D10K: Other PT Losses	0.00	0.00	0.00	0.00	0.00	0.00	0.00
60	2	D10K: D10K: Other PT Losses	0.00	0.00	0.00	0.00	0.00	0.00	0.00
101	0	D10K: D10K: Other PT Losses	0.00	0.00	0.00	0.00	0.00	0.00	0.00
101	1	D10K: D10K: Other PT Losses	0.00	0.00	0.00	0.00	0.00	0.00	0.00
101	2	D10K: D10K: Other PT Losses	0.00	0.00	0.00	0.00	0.00	0.00	0.00
102	0	D10K: D10K: Other PT Losses	0.00	0.00	0.00	0.00	0.00	0.00	0.00
102	1	D10K: D10K: Other PT Losses	0.00	0.00	0.00	0.00	0.00	0.00	0.00
102	2	D10K: D10K: Other PT Losses	0.00	0.00	0.00	0.00	0.00	0.00	0.00
103	0	D10K: D10K: Other PT Losses	0.00	0.00	0.00	0.00	0.00	0.00	0.00
103	1	D10K: D10K: Other PT Losses	0.00	0.00	0.00	0.00	0.00	0.00	0.00
103	2	D10K: D10K: Other PT Losses	0.00	0.00	0.00	0.00	0.00	0.00	0.00
104	0	D10K: D10K: Other PT Losses	0.00	0.00	0.00	0.00	0.00	0.00	0.00
104	1	D10K: D10K: Other PT Losses	0.00	0.00	0.00	0.00	0.00	0.00	0.00
104	2	D10K: D10K: Other PT Losses	0.00	0.00	0.00	0.00	0.00	0.00	0.00
106	0	D10K: D10K: Other PT Losses	1.92	-2.40	-2.40	6.66	6.66	-1.44	2.81
106	1	D10K: D10K: Other PT Losses	1.92	-2.10	-2.10	6.33	6.33	-1.21	2.74
106	2	D10K: D10K: Other PT Losses	1.92	-1.80	-1.80	6.00	6.00	-0.97	2.68
107	0	D10K: D10K: Other PT Losses	1.92	-1.80	-1.80	6.00	6.00	-0.97	2.68
107	1	D10K: D10K: Other PT Losses	1.92	-0.06	-0.06	4.09	4.09	0.38	2.32
107	2	D10K: D10K: Other PT Losses	1.92	1.68	1.69	2.18	2.17	1.74	1.97
108	0	D10K: D10K: Other PT Losses	1.92	1.68	1.69	2.18	2.17	1.74	1.97
108	1	D10K: D10K: Other PT Losses	1.92	3.34	3.35	0.35	0.34	3.03	1.62
108	2	D10K: D10K: Other PT Losses	1.92	5.01	5.02	-1.48	-1.48	4.32	1.28
109	0	D10K: D10K: Other PT Losses	1.92	5.01	5.02	-1.48	-1.48	4.32	1.28
109	1	D10K: D10K: Other PT Losses	1.92	5.60	5.61	-2.13	-2.14	4.79	1.16
109	2	D10K: D10K: Other PT Losses	1.92	6.20	6.21	-2.79	-2.80	5.25	1.03
111	0	D10K: D10K: Other PT Losses	3.01	2.77	2.78	3.26	3.25	2.83	3.05
111	1	D10K: D10K: Other PT Losses	3.01	2.82	2.83	3.21	3.20	2.87	3.04
111	2	D10K: D10K: Other PT Losses	3.01	2.87	2.88	3.15	3.14	2.91	3.03
112	0	D10K: D10K: Other PT Losses	3.01	2.87	2.88	3.15	3.14	2.91	3.03
112	1	D10K: D10K: Other PT Losses	3.01	3.30	3.31	2.68	2.67	3.24	2.95
112	2	D10K: D10K: Other PT Losses	3.01	3.73	3.74	2.22	2.20	3.57	2.86
113	0	D10K: D10K: Other PT Losses	3.01	3.73	3.74	2.22	2.20	3.57	2.86
113	1	D10K: D10K: Other PT Losses	3.01	4.11	4.13	1.79	1.77	3.87	2.78
113	2	D10K: D10K: Other PT Losses	3.01	4.50	4.52	1.37	1.35	4.17	2.70
114	0	D10K: D10K: Other PT Losses	3.01	4.50	4.52	1.37	1.35	4.17	2.70
114	1	D10K: D10K: Other PT Losses	3.01	4.63	4.65	1.23	1.21	4.27	2.67
114	2	D10K: D10K: Other PT Losses	3.01	4.76	4.78	1.08	1.06	4.37	2.64
116	0	D10K: D10K: Other PT Losses	3.31	3.81	3.83	2.77	2.75	3.71	3.21
116	1	D10K: D10K: Other PT Losses	3.31	3.79	3.81	2.79	2.77	3.69	3.21
116	2	D10K: D10K: Other PT Losses	3.31	3.77	3.79	2.81	2.79	3.68	3.22

MEMBER STRESSES

DECK & CANOPY MEMBERS
D10K

(-) compression

			LIVE LOAD ON BACK SPAN (LL3)						
Member	Station	Result Case	(P/A) @ Centroid (kips/ft²)	Normal Stress @ Point 1 (kips/ft²)	Normal Stress @ Point 2 (kips/ft²)	Normal Stress @ Point 3 (kips/ft²)	Normal Stress @ Point 4 (kips/ft²)	Normal Stress @ Point 5 (kips/ft²)	Normal Stress @ Point 6 (kips/ft²)
117	0	D10K: D10K: Other PT Losses	3.31	3.77	3.79	2.81	2.79	3.68	3.22
117	1	D10K: D10K: Other PT Losses	3.31	3.76	3.79	2.81	2.79	3.67	3.22
117	2	D10K: D10K: Other PT Losses	3.31	3.76	3.79	2.82	2.79	3.67	3.22
118	0	D10K: D10K: Other PT Losses	3.31	3.76	3.79	2.82	2.79	3.67	3.22
118	1	D10K: D10K: Other PT Losses	3.31	3.73	3.76	2.85	2.83	3.65	3.22
118	2	D10K: D10K: Other PT Losses	3.31	3.69	3.73	2.89	2.86	3.62	3.23
119	0	D10K: D10K: Other PT Losses	3.31	3.69	3.73	2.89	2.86	3.62	3.23
119	1	D10K: D10K: Other PT Losses	3.31	3.70	3.74	2.88	2.85	3.63	3.23
119	2	D10K: D10K: Other PT Losses	3.31	3.71	3.75	2.87	2.84	3.64	3.23
121	0	D10K: D10K: Other PT Losses	2.43	3.47	3.51	1.29	1.26	3.25	2.22
121	1	D10K: D10K: Other PT Losses	2.43	3.44	3.48	1.32	1.29	3.23	2.22
121	2	D10K: D10K: Other PT Losses	2.43	3.42	3.45	1.35	1.32	3.21	2.23
122	0	D10K: D10K: Other PT Losses	2.43	3.42	3.45	1.35	1.32	3.21	2.23
122	1	D10K: D10K: Other PT Losses	2.43	3.18	3.22	1.61	1.57	3.03	2.28
122	2	D10K: D10K: Other PT Losses	2.43	2.94	2.98	1.87	1.83	2.85	2.32
123	0	D10K: D10K: Other PT Losses	2.43	2.94	2.98	1.87	1.83	2.85	2.32
123	1	D10K: D10K: Other PT Losses	2.43	2.70	2.75	2.13	2.09	2.66	2.37
123	2	D10K: D10K: Other PT Losses	2.43	2.47	2.52	2.39	2.35	2.48	2.42
124	0	D10K: D10K: Other PT Losses	2.43	2.47	2.52	2.39	2.35	2.48	2.42
124	1	D10K: D10K: Other PT Losses	2.43	2.44	2.49	2.42	2.37	2.46	2.43
124	2	D10K: D10K: Other PT Losses	2.43	2.42	2.47	2.44	2.40	2.44	2.43
126	0	D10K: D10K: Other PT Losses	0.73	2.96	3.01	-1.73	-1.77	2.48	0.26
126	1	D10K: D10K: Other PT Losses	0.73	2.76	2.81	-1.51	-1.55	2.33	0.30
126	2	D10K: D10K: Other PT Losses	0.73	2.56	2.61	-1.29	-1.33	2.17	0.35
127	0	D10K: D10K: Other PT Losses	0.73	2.56	2.61	-1.29	-1.33	2.17	0.35
127	1	D10K: D10K: Other PT Losses	0.73	1.79	1.85	-0.45	-0.49	1.58	0.50
127	2	D10K: D10K: Other PT Losses	0.73	1.03	1.08	0.39	0.34	0.98	0.66
128	0	D10K: D10K: Other PT Losses	0.73	1.03	1.08	0.39	0.34	0.98	0.66
128	1	D10K: D10K: Other PT Losses	0.73	0.26	0.32	1.24	1.19	0.38	0.82
133	0	D10K: D10K: Other PT Losses	-1.65	3.71	3.78	-7.54	-7.60	2.54	-2.76
133	1	D10K: D10K: Other PT Losses	-1.65	1.38	1.44	-4.98	-5.03	0.73	-2.28
133	2	D10K: D10K: Other PT Losses	-1.65	-0.96	-0.90	-2.41	-2.46	-1.09	-1.80
134	0	D10K: D10K: Other PT Losses	-1.65	-0.96	-0.90	-2.41	-2.46	-1.09	-1.80
134	1	D10K: D10K: Other PT Losses	-1.65	-3.26	-3.20	0.11	0.06	-2.88	-1.32
134	2	D10K: D10K: Other PT Losses	-1.65	-5.55	-5.50	2.63	2.59	-4.66	-0.85
135	0	D10K: D10K: Other PT Losses	-1.65	-5.55	-5.50	2.63	2.59	-4.66	-0.85
135	1	D10K: D10K: Other PT Losses	-1.65	-6.19	-6.14	3.33	3.29	-5.16	-0.72
135	2	D10K: D10K: Other PT Losses	-1.65	-6.82	-6.78	4.03	3.99	-5.65	-0.59
137	0	D10K: D10K: Other PT Losses	-7.81	-4.80	-4.76	-11.11	-11.15	-5.45	-8.43
137	1	D10K: D10K: Other PT Losses	-7.81	-5.43	-5.39	-10.42	-10.46	-5.94	-8.30
137	2	D10K: D10K: Other PT Losses	-7.81	-6.06	-6.02	-9.73	-9.77	-6.43	-8.17
138	0	D10K: D10K: Other PT Losses	-7.81	-6.06	-6.02	-9.73	-9.77	-6.43	-8.17
138	1	D10K: D10K: Other PT Losses	-7.81	-7.87	-7.82	-7.74	-7.78	-7.84	-7.80
138	2	D10K: D10K: Other PT Losses	-7.81	-9.68	-9.63	-5.76	-5.79	-9.24	-7.43
139	0	D10K: D10K: Other PT Losses	-7.81	-9.68	-9.63	-5.76	-5.79	-9.24	-7.43
139	1	D10K: D10K: Other PT Losses	-7.81	-11.68	-11.64	-3.55	-3.59	-10.80	-7.01
139	2	D10K: D10K: Other PT Losses	-7.81	-13.69	-13.65	-1.35	-1.38	-12.36	-6.60

MEMBER STRESSES

DECK & CANOPY MEMBERS
D10K

(-) compression

			LIVE LOAD ON BACK SPAN (LL3)						
Member	Station	Result Case	(P/A) @ Centroid (kips/ft²)	Normal Stress @ Point 1 (kips/ft²)	Normal Stress @ Point 2 (kips/ft²)	Normal Stress @ Point 3 (kips/ft²)	Normal Stress @ Point 4 (kips/ft²)	Normal Stress @ Point 5 (kips/ft²)	Normal Stress @ Point 6 (kips/ft²)
140	0	D10K: D10K: Other PT Losses	-7.81	-13.69	-13.65	-1.35	-1.38	-12.36	-6.60
140	1	D10K: D10K: Other PT Losses	-7.81	-14.15	-14.12	-0.84	-0.88	-12.72	-6.50
140	2	D10K: D10K: Other PT Losses	-7.81	-14.62	-14.58	-0.33	-0.37	-13.08	-6.41
142	0	D10K: D10K: Other PT Losses	-6.91	-14.05	-14.02	0.93	0.90	-12.45	-5.44
142	1	D10K: D10K: Other PT Losses	-6.91	-13.43	-13.39	0.24	0.21	-11.96	-5.57
142	2	D10K: D10K: Other PT Losses	-6.91	-12.80	-12.76	-0.44	-0.47	-11.47	-5.70
143	0	D10K: D10K: Other PT Losses	-6.91	-12.80	-12.76	-0.44	-0.47	-11.47	-5.70
143	1	D10K: D10K: Other PT Losses	-6.91	-11.47	-11.44	-1.90	-1.93	-10.44	-5.97
143	2	D10K: D10K: Other PT Losses	-6.91	-10.14	-10.11	-3.36	-3.39	-9.41	-6.25
144	0	D10K: D10K: Other PT Losses	-6.91	-10.14	-10.11	-3.36	-3.39	-9.41	-6.25
144	1	D10K: D10K: Other PT Losses	-6.91	-8.77	-8.74	-4.86	-4.89	-8.35	-6.53
144	2	D10K: D10K: Other PT Losses	-6.91	-7.40	-7.38	-6.37	-6.39	-7.28	-6.81
145	0	D10K: D10K: Other PT Losses	-6.91	-7.40	-7.38	-6.37	-6.39	-7.28	-6.81
145	1	D10K: D10K: Other PT Losses	-6.91	-6.96	-6.93	-6.85	-6.88	-6.94	-6.90
145	2	D10K: D10K: Other PT Losses	-6.91	-6.52	-6.49	-7.34	-7.36	-6.60	-6.99
147	0	D10K: D10K: Other PT Losses	-5.67	-10.65	-10.63	-0.20	-0.22	-9.53	-4.65
147	1	D10K: D10K: Other PT Losses	-5.67	-10.24	-10.22	-0.65	-0.68	-9.21	-4.73
147	2	D10K: D10K: Other PT Losses	-5.67	-9.83	-9.81	-1.10	-1.13	-8.89	-4.82
148	0	D10K: D10K: Other PT Losses	-5.67	-9.83	-9.81	-1.10	-1.13	-8.89	-4.82
148	1	D10K: D10K: Other PT Losses	-5.67	-9.05	-9.03	-1.96	-1.98	-8.29	-4.98
148	2	D10K: D10K: Other PT Losses	-5.67	-8.27	-8.24	-2.82	-2.84	-7.68	-5.14
149	0	D10K: D10K: Other PT Losses	-5.67	-8.27	-8.24	-2.82	-2.84	-7.68	-5.14
149	1	D10K: D10K: Other PT Losses	-5.67	-7.48	-7.46	-3.69	-3.70	-7.07	-5.30
149	2	D10K: D10K: Other PT Losses	-5.67	-6.69	-6.67	-4.55	-4.57	-6.46	-5.46
150	0	D10K: D10K: Other PT Losses	-5.67	-6.69	-6.67	-4.55	-4.57	-6.46	-5.46
150	1	D10K: D10K: Other PT Losses	-5.67	-6.41	-6.39	-4.86	-4.88	-6.24	-5.52
150	2	D10K: D10K: Other PT Losses	-5.67	-6.12	-6.10	-5.18	-5.19	-6.01	-5.58
152	0	D10K: D10K: Other PT Losses	-3.36	-18.47	-18.46	13.23	13.21	-15.10	-0.25
152	1	D10K: D10K: Other PT Losses	-3.36	-15.67	-15.66	10.15	10.14	-12.92	-0.83
152	2	D10K: D10K: Other PT Losses	-3.36	-12.87	-12.85	7.08	7.06	-10.74	-1.41
153	0	D10K: D10K: Other PT Losses	-3.36	-12.87	-12.85	7.08	7.06	-10.74	-1.41
153	1	D10K: D10K: Other PT Losses	-3.36	-8.29	-8.28	2.05	2.04	-7.19	-2.35
153	2	D10K: D10K: Other PT Losses	-3.36	-3.71	-3.70	-2.97	-2.99	-3.63	-3.29
154	0	D10K: D10K: Other PT Losses	-3.36	-3.71	-3.70	-2.97	-2.99	-3.63	-3.29
154	1	D10K: D10K: Other PT Losses	-3.36	1.26	1.27	-8.43	-8.44	0.23	-4.31
154	2	D10K: D10K: Other PT Losses	-3.36	6.23	6.24	-13.89	-13.90	4.10	-5.34
155	0	D10K: D10K: Other PT Losses	-3.36	6.23	6.24	-13.89	-13.90	4.10	-5.34
155	1	D10K: D10K: Other PT Losses	-3.36	7.78	7.79	-15.60	-15.61	5.30	-5.66
155	2	D10K: D10K: Other PT Losses	-3.36	9.34	9.35	-17.30	-17.31	6.51	-5.97
157	0	D10K: D10K: Other PT Losses	-0.19	-4.43	-4.43	4.48	4.47	-3.48	0.69
157	1	D10K: D10K: Other PT Losses	-0.19	-3.73	-3.72	3.70	3.70	-2.94	0.54
157	2	D10K: D10K: Other PT Losses	-0.19	-3.03	-3.02	2.93	2.92	-2.39	0.40
158	0	D10K: D10K: Other PT Losses	-0.19	-3.03	-3.02	2.93	2.92	-2.39	0.40
158	1	D10K: D10K: Other PT Losses	-0.19	-0.77	-0.77	0.46	0.45	-0.64	-0.07
158	2	D10K: D10K: Other PT Losses	-0.19	1.48	1.48	-2.02	-2.02	1.11	-0.53
159	0	D10K: D10K: Other PT Losses	-0.19	1.48	1.48	-2.02	-2.02	1.11	-0.53
159	1	D10K: D10K: Other PT Losses	-0.19	3.77	3.77	-4.53	-4.53	2.89	-1.00
159	2	D10K: D10K: Other PT Losses	-0.19	6.05	6.05	-7.03	-7.03	4.66	-1.47

MEMBER STRESSES

DECK & CANOPY MEMBERS
D10K

(-) compression

			TEMPERATURE RISE (TU+)						
Member	Station	Result Case	(P/A) @ Centroid (kips/ft²)	Normal Stress @ Point 1 (kips/ft²)	Normal Stress @ Point 2 (kips/ft²)	Normal Stress @ Point 3 (kips/ft²)	Normal Stress @ Point 4 (kips/ft²)	Normal Stress @ Point 5 (kips/ft²)	Normal Stress @ Point 6 (kips/ft²)
1	0	D10K: D10K: Other PT Losses	0.00	0.00	0.00	0.00	0.00	0.00	0.00
1	1	D10K: D10K: Other PT Losses	0.00	0.00	0.00	0.00	0.00	0.00	0.00
1	2	D10K: D10K: Other PT Losses	0.00	0.00	0.00	0.00	0.00	0.00	0.00
2	0	D10K: D10K: Other PT Losses	-0.46	5.22	5.23	0.37	0.37	3.50	-9.01
2	1	D10K: D10K: Other PT Losses	-0.46	2.94	2.94	0.04	0.03	1.91	-5.57
2	2	D10K: D10K: Other PT Losses	-0.46	0.65	0.66	-0.30	-0.30	0.32	-2.14
3	0	D10K: D10K: Other PT Losses	2.88	4.28	4.29	3.09	3.08	3.86	0.77
3	1	D10K: D10K: Other PT Losses	2.88	3.88	3.88	3.03	3.02	3.58	1.38
3	2	D10K: D10K: Other PT Losses	2.88	3.47	3.48	2.97	2.96	3.29	1.99
4	0	D10K: D10K: Other PT Losses	2.88	3.47	3.48	2.97	2.96	3.29	1.99
4	1	D10K: D10K: Other PT Losses	2.88	2.61	2.61	2.84	2.84	2.69	3.29
4	2	D10K: D10K: Other PT Losses	2.88	1.74	1.74	2.72	2.71	2.09	4.59
5	0	D10K: D10K: Other PT Losses	2.88	1.74	1.74	2.72	2.71	2.09	4.59
5	1	D10K: D10K: Other PT Losses	2.88	0.87	0.88	2.59	2.58	1.48	5.90
5	2	D10K: D10K: Other PT Losses	2.88	0.00	0.01	2.46	2.46	0.88	7.20
6	0	D10K: D10K: Other PT Losses	2.88	0.00	0.01	2.46	2.46	0.88	7.20
6	1	D10K: D10K: Other PT Losses	2.88	-0.11	-0.10	2.45	2.44	0.80	7.37
6	2	D10K: D10K: Other PT Losses	2.88	-0.23	-0.22	2.43	2.42	0.72	7.55
7	0	D10K: D10K: Other PT Losses	2.73	1.79	1.79	2.59	2.58	2.07	4.13
7	1	D10K: D10K: Other PT Losses	2.73	0.94	0.94	2.47	2.46	1.48	5.41
7	2	D10K: D10K: Other PT Losses	2.73	0.09	0.10	2.34	2.34	0.89	6.68
8	0	D10K: D10K: Other PT Losses	4.21	1.96	1.97	3.88	3.88	2.65	7.57
8	1	D10K: D10K: Other PT Losses	4.21	1.93	1.94	3.88	3.87	2.63	7.62
8	2	D10K: D10K: Other PT Losses	4.21	1.90	1.91	3.87	3.87	2.60	7.67
9	0	D10K: D10K: Other PT Losses	4.21	1.90	1.91	3.87	3.87	2.60	7.67
9	1	D10K: D10K: Other PT Losses	4.21	1.82	1.83	3.86	3.85	2.55	7.79
9	2	D10K: D10K: Other PT Losses	4.21	1.74	1.75	3.85	3.84	2.49	7.91
10	0	D10K: D10K: Other PT Losses	4.21	1.74	1.75	3.85	3.84	2.49	7.91
10	1	D10K: D10K: Other PT Losses	4.21	1.66	1.67	3.84	3.83	2.44	8.03
10	2	D10K: D10K: Other PT Losses	4.21	1.58	1.59	3.83	3.82	2.38	8.15
11	0	D10K: D10K: Other PT Losses	4.21	1.58	1.59	3.83	3.82	2.38	8.15
11	1	D10K: D10K: Other PT Losses	4.21	1.57	1.58	3.83	3.82	2.37	8.17
11	2	D10K: D10K: Other PT Losses	4.21	1.56	1.56	3.82	3.82	2.36	8.19
12	0	D10K: D10K: Other PT Losses	4.24	2.41	2.42	3.97	3.96	2.97	6.98
12	1	D10K: D10K: Other PT Losses	4.24	2.20	2.21	3.94	3.93	2.82	7.28
12	2	D10K: D10K: Other PT Losses	4.24	2.00	2.01	3.91	3.90	2.68	7.58
13	0	D10K: D10K: Other PT Losses	4.56	2.51	2.52	4.27	4.26	3.13	7.65
13	1	D10K: D10K: Other PT Losses	4.56	2.59	2.60	4.28	4.27	3.20	7.52
13	2	D10K: D10K: Other PT Losses	4.56	2.68	2.69	4.29	4.29	3.26	7.38
14	0	D10K: D10K: Other PT Losses	4.56	2.68	2.69	4.29	4.29	3.26	7.38
14	1	D10K: D10K: Other PT Losses	4.56	2.97	2.98	4.34	4.33	3.46	6.96
14	2	D10K: D10K: Other PT Losses	4.56	3.25	3.26	4.38	4.37	3.65	6.54
15	0	D10K: D10K: Other PT Losses	4.56	3.25	3.26	4.38	4.37	3.65	6.54
15	1	D10K: D10K: Other PT Losses	4.56	3.53	3.54	4.42	4.41	3.85	6.11
15	2	D10K: D10K: Other PT Losses	4.56	3.81	3.82	4.46	4.45	4.04	5.69
16	0	D10K: D10K: Other PT Losses	4.56	3.81	3.82	4.46	4.45	4.04	5.69
16	1	D10K: D10K: Other PT Losses	4.56	3.84	3.85	4.47	4.45	4.06	5.64
16	2	D10K: D10K: Other PT Losses	4.56	3.87	3.88	4.47	4.46	4.09	5.60

MEMBER STRESSES

DECK & CANOPY MEMBERS
D10K

(-) compression

			TEMPERATURE RISE (TU+)						
Member	Station	Result Case	(P/A) @ Centroid (kips/ft²)	Normal Stress @ Point 1 (kips/ft²)	Normal Stress @ Point 2 (kips/ft²)	Normal Stress @ Point 3 (kips/ft²)	Normal Stress @ Point 4 (kips/ft²)	Normal Stress @ Point 5 (kips/ft²)	Normal Stress @ Point 6 (kips/ft²)
17	0	D10K: D10K: Other PT Losses	4.45	3.70	3.72	4.35	4.34	3.94	5.56
17	1	D10K: D10K: Other PT Losses	4.45	4.07	4.08	4.40	4.39	4.19	5.01
17	2	D10K: D10K: Other PT Losses	4.45	4.43	4.44	4.45	4.44	4.44	4.47
18	0	D10K: D10K: Other PT Losses	3.97	4.14	4.15	4.00	3.99	4.09	3.69
18	1	D10K: D10K: Other PT Losses	3.97	3.86	3.87	3.96	3.95	3.90	4.11
18	2	D10K: D10K: Other PT Losses	3.97	3.58	3.60	3.92	3.90	3.70	4.53
19	0	D10K: D10K: Other PT Losses	3.97	3.58	3.60	3.92	3.90	3.70	4.53
19	1	D10K: D10K: Other PT Losses	3.97	2.39	2.41	3.74	3.73	2.88	6.32
19	2	D10K: D10K: Other PT Losses	3.97	1.21	1.22	3.57	3.56	2.05	8.11
20	0	D10K: D10K: Other PT Losses	3.97	1.21	1.22	3.57	3.56	2.05	8.11
20	1	D10K: D10K: Other PT Losses	3.97	0.02	0.03	3.40	3.38	1.22	9.89
20	2	D10K: D10K: Other PT Losses	3.97	-1.17	-1.16	3.22	3.21	0.39	11.68
21	0	D10K: D10K: Other PT Losses	3.97	-1.17	-1.16	3.22	3.21	0.39	11.68
21	1	D10K: D10K: Other PT Losses	3.97	-1.38	-1.37	3.19	3.18	0.25	11.99
21	2	D10K: D10K: Other PT Losses	3.97	-1.59	-1.58	3.16	3.15	0.10	12.31
22	0	D10K: D10K: Other PT Losses	3.06	-3.48	-3.47	2.11	2.10	-1.49	12.90
22	1	D10K: D10K: Other PT Losses	3.06	-2.44	-2.43	2.27	2.25	-0.77	11.33
22	2	D10K: D10K: Other PT Losses	3.06	-1.41	-1.39	2.42	2.40	-0.04	9.77
23	0	D10K: D10K: Other PT Losses	2.39	-3.39	-3.38	1.55	1.54	-1.63	11.07
23	1	D10K: D10K: Other PT Losses	2.39	-2.93	-2.91	1.62	1.61	-1.30	10.38
23	2	D10K: D10K: Other PT Losses	2.39	-2.46	-2.45	1.69	1.68	-0.98	9.68
24	0	D10K: D10K: Other PT Losses	2.39	-2.46	-2.45	1.69	1.68	-0.98	9.68
24	1	D10K: D10K: Other PT Losses	2.39	0.65	0.67	2.15	2.13	1.19	5.00
24	2	D10K: D10K: Other PT Losses	2.39	3.76	3.78	2.60	2.59	3.35	0.32
25	0	D10K: D10K: Other PT Losses	2.39	3.76	3.78	2.60	2.59	3.35	0.32
25	1	D10K: D10K: Other PT Losses	2.39	6.88	6.90	3.06	3.04	5.52	-4.36
25	2	D10K: D10K: Other PT Losses	2.39	9.99	10.01	3.51	3.50	7.69	-9.05
26	0	D10K: D10K: Other PT Losses	2.39	9.99	10.01	3.51	3.50	7.69	-9.05
26	1	D10K: D10K: Other PT Losses	2.39	10.79	10.81	3.63	3.61	8.24	-10.25
26	2	D10K: D10K: Other PT Losses	2.39	11.59	11.61	3.75	3.73	8.80	-11.45
29	0	D10K: D10K: Other PT Losses	3.23	12.90	13.00	4.70	4.60	10.00	-11.39
29	1	D10K: D10K: Other PT Losses	3.23	11.93	12.03	4.56	4.46	9.32	-9.92
29	2	D10K: D10K: Other PT Losses	3.23	10.95	11.05	4.42	4.32	8.64	-8.46
30	0	D10K: D10K: Other PT Losses	3.23	10.95	11.05	4.42	4.32	8.64	-8.46
30	1	D10K: D10K: Other PT Losses	3.23	7.18	7.27	3.86	3.77	6.01	-2.78
30	2	D10K: D10K: Other PT Losses	3.23	3.41	3.49	3.30	3.22	3.38	2.90
31	0	D10K: D10K: Other PT Losses	3.23	3.41	3.49	3.30	3.22	3.38	2.90
31	1	D10K: D10K: Other PT Losses	3.23	-0.36	-0.29	2.75	2.67	0.75	8.58
31	2	D10K: D10K: Other PT Losses	3.23	-4.14	-4.07	2.19	2.12	-1.88	14.25
32	0	D10K: D10K: Other PT Losses	3.23	-4.14	-4.07	2.19	2.12	-1.88	14.25
32	1	D10K: D10K: Other PT Losses	3.23	-4.69	-4.63	2.11	2.04	-2.26	15.09
32	2	D10K: D10K: Other PT Losses	3.23	-5.24	-5.18	2.03	1.96	-2.65	15.92
33	0	D10K: D10K: Other PT Losses	4.19	-3.00	-2.94	3.18	3.12	-0.79	14.96
33	1	D10K: D10K: Other PT Losses	4.19	-3.67	-3.61	3.08	3.02	-1.26	15.97
33	2	D10K: D10K: Other PT Losses	4.19	-4.35	-4.29	2.98	2.92	-1.73	16.99
34	0	D10K: D10K: Other PT Losses	4.23	-2.24	-2.18	3.32	3.26	-0.25	13.91
34	1	D10K: D10K: Other PT Losses	4.23	-2.04	-1.98	3.35	3.29	-0.11	13.62
34	2	D10K: D10K: Other PT Losses	4.23	-1.84	-1.78	3.38	3.32	0.02	13.32

MEMBER STRESSES

DECK & CANOPY MEMBERS
D10K

(-) compression

			TEMPERATURE RISE (TU+)						
Member	Station	Result Case	(P/A) @ Centroid (kips/ft²)	Normal Stress @ Point 1 (kips/ft²)	Normal Stress @ Point 2 (kips/ft²)	Normal Stress @ Point 3 (kips/ft²)	Normal Stress @ Point 4 (kips/ft²)	Normal Stress @ Point 5 (kips/ft²)	Normal Stress @ Point 6 (kips/ft²)
35	0	D10K: D10K: Other PT Losses	4.23	-1.84	-1.78	3.38	3.32	0.02	13.32
35	1	D10K: D10K: Other PT Losses	4.23	-1.23	-1.18	3.47	3.41	0.45	12.41
35	2	D10K: D10K: Other PT Losses	4.23	-0.63	-0.57	3.55	3.50	0.87	11.49
36	0	D10K: D10K: Other PT Losses	4.23	-0.63	-0.57	3.55	3.50	0.87	11.49
36	1	D10K: D10K: Other PT Losses	4.23	-0.01	0.04	3.64	3.59	1.29	10.58
36	2	D10K: D10K: Other PT Losses	4.23	0.60	0.64	3.73	3.68	1.72	9.66
37	0	D10K: D10K: Other PT Losses	4.23	0.60	0.64	3.73	3.68	1.72	9.66
37	1	D10K: D10K: Other PT Losses	4.23	0.91	0.96	3.77	3.73	1.94	9.19
37	2	D10K: D10K: Other PT Losses	4.23	1.23	1.27	3.82	3.77	2.16	8.72
38	0	D10K: D10K: Other PT Losses	4.75	1.97	2.02	4.37	4.32	2.83	8.89
38	1	D10K: D10K: Other PT Losses	4.75	1.74	1.78	4.34	4.29	2.67	9.25
38	2	D10K: D10K: Other PT Losses	4.75	1.50	1.55	4.30	4.26	2.50	9.60
39	0	D10K: D10K: Other PT Losses	4.68	1.73	1.77	4.27	4.23	2.64	9.08
39	1	D10K: D10K: Other PT Losses	4.68	1.64	1.69	4.26	4.21	2.58	9.21
39	2	D10K: D10K: Other PT Losses	4.68	1.56	1.60	4.25	4.20	2.52	9.34
40	0	D10K: D10K: Other PT Losses	4.68	1.56	1.60	4.25	4.20	2.52	9.34
40	1	D10K: D10K: Other PT Losses	4.68	1.30	1.34	4.21	4.17	2.34	9.73
40	2	D10K: D10K: Other PT Losses	4.68	1.04	1.08	4.17	4.13	2.16	10.11
41	0	D10K: D10K: Other PT Losses	4.68	1.04	1.08	4.17	4.13	2.16	10.11
41	1	D10K: D10K: Other PT Losses	4.68	0.78	0.82	4.13	4.09	1.98	10.50
41	2	D10K: D10K: Other PT Losses	4.68	0.53	0.56	4.09	4.06	1.80	10.89
42	0	D10K: D10K: Other PT Losses	4.68	0.53	0.56	4.09	4.06	1.80	10.89
42	1	D10K: D10K: Other PT Losses	4.68	0.37	0.40	4.07	4.03	1.69	11.13
42	2	D10K: D10K: Other PT Losses	4.68	0.21	0.24	4.04	4.01	1.58	11.37
43	0	D10K: D10K: Other PT Losses	4.29	-0.54	-0.51	3.60	3.57	0.94	11.54
43	1	D10K: D10K: Other PT Losses	4.29	-0.38	-0.35	3.63	3.60	1.05	11.29
43	2	D10K: D10K: Other PT Losses	4.29	-0.21	-0.18	3.65	3.62	1.17	11.04
44	0	D10K: D10K: Other PT Losses	4.35	-1.47	-1.44	3.52	3.49	0.31	13.08
44	1	D10K: D10K: Other PT Losses	4.35	-1.54	-1.51	3.51	3.48	0.26	13.19
44	2	D10K: D10K: Other PT Losses	4.35	-1.61	-1.59	3.50	3.47	0.21	13.30
45	0	D10K: D10K: Other PT Losses	4.35	-1.61	-1.59	3.50	3.47	0.21	13.30
45	1	D10K: D10K: Other PT Losses	4.35	-1.82	-1.79	3.46	3.44	0.07	13.61
45	2	D10K: D10K: Other PT Losses	4.35	-2.02	-2.00	3.43	3.41	-0.08	13.92
46	0	D10K: D10K: Other PT Losses	4.35	-2.02	-2.00	3.43	3.41	-0.08	13.92
46	1	D10K: D10K: Other PT Losses	4.35	-2.23	-2.21	3.40	3.38	-0.22	14.23
46	2	D10K: D10K: Other PT Losses	4.35	-2.43	-2.41	3.37	3.35	-0.36	14.54
47	0	D10K: D10K: Other PT Losses	4.35	-2.43	-2.41	3.37	3.35	-0.36	14.54
47	1	D10K: D10K: Other PT Losses	4.35	-2.58	-2.56	3.35	3.33	-0.47	14.76
47	2	D10K: D10K: Other PT Losses	4.35	-2.72	-2.71	3.33	3.31	-0.57	14.98
48	0	D10K: D10K: Other PT Losses	2.86	-5.68	-5.66	1.62	1.61	-3.08	15.68
48	1	D10K: D10K: Other PT Losses	2.86	-5.06	-5.04	1.71	1.70	-2.64	14.75
48	2	D10K: D10K: Other PT Losses	2.86	-4.44	-4.42	1.80	1.79	-2.21	13.82
49	0	D10K: D10K: Other PT Losses	3.15	-7.69	-7.67	1.57	1.56	-4.39	19.42
49	1	D10K: D10K: Other PT Losses	3.15	-7.13	-7.12	1.65	1.64	-4.00	18.59
49	2	D10K: D10K: Other PT Losses	3.15	-6.58	-6.56	1.73	1.72	-3.62	17.76
50	0	D10K: D10K: Other PT Losses	3.15	-6.58	-6.56	1.73	1.72	-3.62	17.76
50	1	D10K: D10K: Other PT Losses	3.15	-5.11	-5.10	1.95	1.94	-2.60	15.55
50	2	D10K: D10K: Other PT Losses	3.15	-3.64	-3.64	2.16	2.15	-1.58	13.35

MEMBER STRESSES

DECK & CANOPY MEMBERS
D10K

(-) compression

			TEMPERATURE RISE (TU+)						
Member	Station	Result Case	(P/A) @ Centroid (kips/ft²)	Normal Stress @ Point 1 (kips/ft²)	Normal Stress @ Point 2 (kips/ft²)	Normal Stress @ Point 3 (kips/ft²)	Normal Stress @ Point 4 (kips/ft²)	Normal Stress @ Point 5 (kips/ft²)	Normal Stress @ Point 6 (kips/ft²)
51	0	D10K: D10K: Other PT Losses	3.15	-3.64	-3.64	2.16	2.15	-1.58	13.35
51	1	D10K: D10K: Other PT Losses	3.15	-2.18	-2.17	2.37	2.37	-0.56	11.15
51	2	D10K: D10K: Other PT Losses	3.15	-0.71	-0.71	2.59	2.58	0.46	8.94
52	0	D10K: D10K: Other PT Losses	3.15	-0.71	-0.71	2.59	2.58	0.46	8.94
52	1	D10K: D10K: Other PT Losses	3.15	0.46	0.46	2.75	2.75	1.27	7.19
52	2	D10K: D10K: Other PT Losses	3.15	1.62	1.62	2.92	2.92	2.08	5.44
60	0	D10K: D10K: Other PT Losses	0.00	0.00	0.00	0.00	0.00	0.00	0.00
60	1	D10K: D10K: Other PT Losses	0.00	0.00	0.00	0.00	0.00	0.00	0.00
60	2	D10K: D10K: Other PT Losses	0.00	0.00	0.00	0.00	0.00	0.00	0.00
101	0	D10K: D10K: Other PT Losses	0.00	0.00	0.00	0.00	0.00	0.00	0.00
101	1	D10K: D10K: Other PT Losses	0.00	0.00	0.00	0.00	0.00	0.00	0.00
101	2	D10K: D10K: Other PT Losses	0.00	0.00	0.00	0.00	0.00	0.00	0.00
102	0	D10K: D10K: Other PT Losses	0.00	0.00	0.00	0.00	0.00	0.00	0.00
102	1	D10K: D10K: Other PT Losses	0.00	0.00	0.00	0.00	0.00	0.00	0.00
102	2	D10K: D10K: Other PT Losses	0.00	0.00	0.00	0.00	0.00	0.00	0.00
103	0	D10K: D10K: Other PT Losses	0.00	0.00	0.00	0.00	0.00	0.00	0.00
103	1	D10K: D10K: Other PT Losses	0.00	0.00	0.00	0.00	0.00	0.00	0.00
103	2	D10K: D10K: Other PT Losses	0.00	0.00	0.00	0.00	0.00	0.00	0.00
104	0	D10K: D10K: Other PT Losses	0.00	0.00	0.00	0.00	0.00	0.00	0.00
104	1	D10K: D10K: Other PT Losses	0.00	0.00	0.00	0.00	0.00	0.00	0.00
104	2	D10K: D10K: Other PT Losses	0.00	0.00	0.00	0.00	0.00	0.00	0.00
106	0	D10K: D10K: Other PT Losses	-4.08	3.98	3.98	-12.93	-12.93	2.19	-5.74
106	1	D10K: D10K: Other PT Losses	-4.08	3.38	3.38	-12.26	-12.26	1.72	-5.61
106	2	D10K: D10K: Other PT Losses	-4.08	2.77	2.77	-11.60	-11.60	1.25	-5.49
107	0	D10K: D10K: Other PT Losses	-4.08	2.77	2.77	-11.60	-11.60	1.25	-5.49
107	1	D10K: D10K: Other PT Losses	-4.08	-0.75	-0.75	-7.73	-7.73	-1.49	-4.76
107	2	D10K: D10K: Other PT Losses	-4.08	-4.27	-4.27	-3.86	-3.86	-4.23	-4.04
108	0	D10K: D10K: Other PT Losses	-4.08	-4.27	-4.27	-3.86	-3.86	-4.23	-4.04
108	1	D10K: D10K: Other PT Losses	-4.08	-7.64	-7.63	-0.17	-0.17	-6.84	-3.34
108	2	D10K: D10K: Other PT Losses	-4.08	-11.00	-11.00	3.52	3.52	-9.45	-2.65
109	0	D10K: D10K: Other PT Losses	-4.08	-11.00	-11.00	3.52	3.52	-9.45	-2.65
109	1	D10K: D10K: Other PT Losses	-4.08	-12.21	-12.20	4.85	4.85	-10.39	-2.40
109	2	D10K: D10K: Other PT Losses	-4.08	-13.41	-13.41	6.18	6.17	-11.33	-2.15
111	0	D10K: D10K: Other PT Losses	-4.91	-8.03	-8.02	-1.50	-1.50	-7.33	-4.27
111	1	D10K: D10K: Other PT Losses	-4.91	-7.93	-7.93	-1.60	-1.61	-7.26	-4.29
111	2	D10K: D10K: Other PT Losses	-4.91	-7.83	-7.83	-1.71	-1.71	-7.18	-4.31
112	0	D10K: D10K: Other PT Losses	-4.91	-7.83	-7.83	-1.71	-1.71	-7.18	-4.31
112	1	D10K: D10K: Other PT Losses	-4.91	-7.43	-7.42	-2.16	-2.16	-6.86	-4.40
112	2	D10K: D10K: Other PT Losses	-4.91	-7.02	-7.01	-2.61	-2.61	-6.55	-4.48
113	0	D10K: D10K: Other PT Losses	-4.91	-7.02	-7.01	-2.61	-2.61	-6.55	-4.48
113	1	D10K: D10K: Other PT Losses	-4.91	-6.57	-6.57	-3.09	-3.10	-6.20	-4.57
113	2	D10K: D10K: Other PT Losses	-4.91	-6.13	-6.12	-3.58	-3.59	-5.86	-4.66
114	0	D10K: D10K: Other PT Losses	-4.91	-6.13	-6.12	-3.58	-3.59	-5.86	-4.66
114	1	D10K: D10K: Other PT Losses	-4.91	-6.03	-6.02	-3.69	-3.70	-5.78	-4.69
114	2	D10K: D10K: Other PT Losses	-4.91	-5.93	-5.92	-3.80	-3.80	-5.70	-4.71
116	0	D10K: D10K: Other PT Losses	-3.09	-7.15	-7.15	1.37	1.37	-6.25	-2.25
116	1	D10K: D10K: Other PT Losses	-3.09	-6.94	-6.94	1.14	1.14	-6.08	-2.30
116	2	D10K: D10K: Other PT Losses	-3.09	-6.73	-6.73	0.91	0.91	-5.92	-2.34

MEMBER STRESSES

DECK & CANOPY MEMBERS
D10K

(-) compression

			TEMPERATURE RISE (TU+)						
Member	Station	Result Case	(P/A) @ Centroid (kips/ft²)	Normal Stress @ Point 1 (kips/ft²)	Normal Stress @ Point 2 (kips/ft²)	Normal Stress @ Point 3 (kips/ft²)	Normal Stress @ Point 4 (kips/ft²)	Normal Stress @ Point 5 (kips/ft²)	Normal Stress @ Point 6 (kips/ft²)
117	0	D10K: D10K: Other PT Losses	-3.09	-6.73	-6.73	0.91	0.91	-5.92	-2.34
117	1	D10K: D10K: Other PT Losses	-3.09	-5.32	-5.31	-0.64	-0.64	-4.82	-2.63
117	2	D10K: D10K: Other PT Losses	-3.09	-3.91	-3.90	-2.19	-2.19	-3.72	-2.92
118	0	D10K: D10K: Other PT Losses	-3.09	-3.91	-3.90	-2.19	-2.19	-3.72	-2.92
118	1	D10K: D10K: Other PT Losses	-3.09	-2.51	-2.50	-3.73	-3.74	-2.63	-3.21
118	2	D10K: D10K: Other PT Losses	-3.09	-1.10	-1.09	-5.27	-5.28	-1.54	-3.50
119	0	D10K: D10K: Other PT Losses	-3.09	-1.10	-1.09	-5.27	-5.28	-1.54	-3.50
119	1	D10K: D10K: Other PT Losses	-3.09	-0.82	-0.81	-5.58	-5.59	-1.32	-3.56
119	2	D10K: D10K: Other PT Losses	-3.09	-0.53	-0.53	-5.89	-5.90	-1.10	-3.62
121	0	D10K: D10K: Other PT Losses	3.00	-4.11	-4.10	10.80	10.80	-2.52	4.46
121	1	D10K: D10K: Other PT Losses	3.00	-3.67	-3.67	10.33	10.32	-2.18	4.37
121	2	D10K: D10K: Other PT Losses	3.00	-3.24	-3.23	9.86	9.85	-1.85	4.29
122	0	D10K: D10K: Other PT Losses	3.00	-3.24	-3.23	9.86	9.85	-1.85	4.29
122	1	D10K: D10K: Other PT Losses	3.00	-0.26	-0.25	6.58	6.57	0.47	3.67
122	2	D10K: D10K: Other PT Losses	3.00	2.72	2.74	3.30	3.29	2.79	3.06
123	0	D10K: D10K: Other PT Losses	3.00	2.72	2.74	3.30	3.29	2.79	3.06
123	1	D10K: D10K: Other PT Losses	3.00	5.71	5.72	0.03	0.02	5.11	2.44
123	2	D10K: D10K: Other PT Losses	3.00	8.69	8.71	-3.25	-3.26	7.43	1.83
124	0	D10K: D10K: Other PT Losses	3.00	8.69	8.71	-3.25	-3.26	7.43	1.83
124	1	D10K: D10K: Other PT Losses	3.00	9.07	9.08	-3.66	-3.67	7.72	1.75
124	2	D10K: D10K: Other PT Losses	3.00	9.45	9.46	-4.08	-4.09	8.02	1.67
126	0	D10K: D10K: Other PT Losses	20.22	5.80	5.81	36.05	36.04	9.02	23.19
126	1	D10K: D10K: Other PT Losses	20.22	7.47	7.49	34.21	34.20	10.32	22.84
126	2	D10K: D10K: Other PT Losses	20.22	9.15	9.16	32.37	32.36	11.62	22.50
127	0	D10K: D10K: Other PT Losses	20.22	9.15	9.16	32.37	32.36	11.62	22.50
127	1	D10K: D10K: Other PT Losses	20.22	15.04	15.05	25.91	25.89	16.20	21.28
127	2	D10K: D10K: Other PT Losses	20.22	20.93	20.95	19.44	19.42	20.78	20.07
128	0	D10K: D10K: Other PT Losses	20.22	20.93	20.95	19.44	19.42	20.78	20.07
128	1	D10K: D10K: Other PT Losses	20.22	26.96	26.98	12.81	12.80	25.47	18.83
133	0	D10K: D10K: Other PT Losses	19.23	32.80	32.83	4.33	4.31	29.79	16.44
133	1	D10K: D10K: Other PT Losses	19.23	27.08	27.11	10.61	10.59	25.34	17.62
133	2	D10K: D10K: Other PT Losses	19.23	21.36	21.38	16.90	16.88	20.89	18.79
134	0	D10K: D10K: Other PT Losses	19.23	21.36	21.38	16.90	16.88	20.89	18.79
134	1	D10K: D10K: Other PT Losses	19.23	15.62	15.64	23.19	23.18	16.44	19.97
134	2	D10K: D10K: Other PT Losses	19.23	9.89	9.91	29.49	29.48	11.98	21.16
135	0	D10K: D10K: Other PT Losses	19.23	9.89	9.91	29.49	29.48	11.98	21.16
135	1	D10K: D10K: Other PT Losses	19.23	8.44	8.46	31.09	31.07	10.85	21.45
135	2	D10K: D10K: Other PT Losses	19.23	6.98	7.00	32.68	32.66	9.72	21.75
137	0	D10K: D10K: Other PT Losses	0.75	13.36	13.38	-13.09	-13.11	10.56	-1.84
137	1	D10K: D10K: Other PT Losses	0.75	11.65	11.66	-11.21	-11.23	9.23	-1.49
137	2	D10K: D10K: Other PT Losses	0.75	9.93	9.95	-9.33	-9.34	7.89	-1.14
138	0	D10K: D10K: Other PT Losses	0.75	9.93	9.95	-9.33	-9.34	7.89	-1.14
138	1	D10K: D10K: Other PT Losses	0.75	4.80	4.81	-3.69	-3.70	3.90	-0.08
138	2	D10K: D10K: Other PT Losses	0.75	-0.34	-0.32	1.95	1.93	-0.09	0.98
139	0	D10K: D10K: Other PT Losses	0.75	-0.34	-0.32	1.95	1.93	-0.09	0.98
139	1	D10K: D10K: Other PT Losses	0.75	-5.82	-5.80	7.96	7.95	-4.35	2.10
139	2	D10K: D10K: Other PT Losses	0.75	-11.30	-11.28	13.98	13.96	-8.60	3.23

MEMBER STRESSES

DECK & CANOPY MEMBERS
D10K

(-) compression

			TEMPERATURE RISE (TU+)						
Member	Station	Result Case	(P/A) @ Centroid (kips/ft²)	Normal Stress @ Point 1 (kips/ft²)	Normal Stress @ Point 2 (kips/ft²)	Normal Stress @ Point 3 (kips/ft²)	Normal Stress @ Point 4 (kips/ft²)	Normal Stress @ Point 5 (kips/ft²)	Normal Stress @ Point 6 (kips/ft²)
140	0	D10K: D10K: Other PT Losses	0.75	-11.30	-11.28	13.98	13.96	-8.61	3.23
140	1	D10K: D10K: Other PT Losses	0.75	-12.76	-12.75	15.59	15.57	-9.74	3.53
140	2	D10K: D10K: Other PT Losses	0.75	-14.23	-14.21	17.20	17.18	-10.88	3.83
142	0	D10K: D10K: Other PT Losses	-3.27	-1.11	-1.10	-5.63	-5.65	-1.59	-3.71
142	1	D10K: D10K: Other PT Losses	-3.27	-2.10	-2.08	-4.55	-4.57	-2.35	-3.51
142	2	D10K: D10K: Other PT Losses	-3.27	-3.08	-3.07	-3.47	-3.48	-3.12	-3.31
143	0	D10K: D10K: Other PT Losses	-3.27	-3.08	-3.07	-3.47	-3.48	-3.12	-3.31
143	1	D10K: D10K: Other PT Losses	-3.27	-5.05	-5.04	-1.31	-1.32	-4.65	-2.90
143	2	D10K: D10K: Other PT Losses	-3.27	-7.03	-7.01	0.86	0.85	-6.18	-2.49
144	0	D10K: D10K: Other PT Losses	-3.27	-7.03	-7.01	0.86	0.85	-6.18	-2.49
144	1	D10K: D10K: Other PT Losses	-3.27	-9.20	-9.19	3.25	3.24	-7.87	-2.05
144	2	D10K: D10K: Other PT Losses	-3.27	-11.38	-11.37	5.64	5.63	-9.57	-1.60
145	0	D10K: D10K: Other PT Losses	-3.27	-11.38	-11.37	5.64	5.63	-9.57	-1.60
145	1	D10K: D10K: Other PT Losses	-3.27	-11.93	-11.92	6.25	6.24	-10.00	-1.48
145	2	D10K: D10K: Other PT Losses	-3.27	-12.49	-12.48	6.86	6.85	-10.43	-1.37
147	0	D10K: D10K: Other PT Losses	-4.50	-10.52	-10.51	2.11	2.10	-9.17	-3.26
147	1	D10K: D10K: Other PT Losses	-4.50	-10.42	-10.40	2.00	1.99	-9.09	-3.28
147	2	D10K: D10K: Other PT Losses	-4.50	-10.31	-10.30	1.88	1.87	-9.01	-3.30
148	0	D10K: D10K: Other PT Losses	-4.50	-10.31	-10.30	1.88	1.87	-9.01	-3.30
148	1	D10K: D10K: Other PT Losses	-4.50	-10.10	-10.09	1.64	1.63	-8.84	-3.35
148	2	D10K: D10K: Other PT Losses	-4.50	-9.88	-9.87	1.40	1.40	-8.67	-3.39
149	0	D10K: D10K: Other PT Losses	-4.50	-9.88	-9.87	1.40	1.40	-8.67	-3.39
149	1	D10K: D10K: Other PT Losses	-4.50	-9.69	-9.68	1.20	1.19	-8.53	-3.43
149	2	D10K: D10K: Other PT Losses	-4.50	-9.50	-9.49	0.99	0.98	-8.38	-3.47
150	0	D10K: D10K: Other PT Losses	-4.50	-9.50	-9.49	0.99	0.98	-8.38	-3.47
150	1	D10K: D10K: Other PT Losses	-4.50	-9.40	-9.39	0.88	0.88	-8.31	-3.49
150	2	D10K: D10K: Other PT Losses	-4.50	-9.30	-9.29	0.77	0.77	-8.23	-3.51
152	0	D10K: D10K: Other PT Losses	-3.84	-22.08	-22.07	16.19	16.18	-18.01	-0.08
152	1	D10K: D10K: Other PT Losses	-3.84	-19.23	-19.22	13.06	13.05	-15.80	-0.67
152	2	D10K: D10K: Other PT Losses	-3.84	-16.38	-16.37	9.93	9.92	-13.58	-1.26
153	0	D10K: D10K: Other PT Losses	-3.84	-16.38	-16.37	9.93	9.92	-13.58	-1.26
153	1	D10K: D10K: Other PT Losses	-3.84	-11.72	-11.71	4.82	4.81	-9.96	-2.22
153	2	D10K: D10K: Other PT Losses	-3.84	-7.06	-7.06	-0.30	-0.30	-6.34	-3.18
154	0	D10K: D10K: Other PT Losses	-3.84	-7.06	-7.06	-0.30	-0.30	-6.34	-3.18
154	1	D10K: D10K: Other PT Losses	-3.84	-2.01	-2.00	-5.85	-5.86	-2.41	-4.22
154	2	D10K: D10K: Other PT Losses	-3.84	3.05	3.05	-11.40	-11.41	1.52	-5.26
155	0	D10K: D10K: Other PT Losses	-3.84	3.05	3.06	-11.40	-11.40	1.52	-5.26
155	1	D10K: D10K: Other PT Losses	-3.84	4.63	4.64	-13.14	-13.14	2.75	-5.58
155	2	D10K: D10K: Other PT Losses	-3.84	6.22	6.22	-14.88	-14.88	3.98	-5.91
157	0	D10K: D10K: Other PT Losses	-0.94	-17.51	-17.50	17.25	17.25	-13.81	2.47
157	1	D10K: D10K: Other PT Losses	-0.94	-14.97	-14.96	14.46	14.46	-11.84	1.95
157	2	D10K: D10K: Other PT Losses	-0.94	-12.43	-12.43	11.68	11.67	-9.87	1.43
158	0	D10K: D10K: Other PT Losses	-0.94	-12.43	-12.43	11.68	11.67	-9.87	1.43
158	1	D10K: D10K: Other PT Losses	-0.94	-4.30	-4.30	2.75	2.75	-3.55	-0.25
158	2	D10K: D10K: Other PT Losses	-0.94	3.83	3.83	-6.18	-6.18	2.77	-1.92
159	0	D10K: D10K: Other PT Losses	-0.94	3.83	3.83	-6.18	-6.18	2.77	-1.92
159	1	D10K: D10K: Other PT Losses	-0.94	12.07	12.08	-15.23	-15.23	9.18	-3.62
159	2	D10K: D10K: Other PT Losses	-0.94	20.32	20.32	-24.28	-24.28	15.58	-5.32

MEMBER STRESSES

DECK & CANOPY MEMBERS
D10K

(-) compression

			TEMPERATURE FALL (TU-)						
Member	Station	Result Case	(P/A) @ Centroid (kips/ft²)	Normal Stress @ Point 1 (kips/ft²)	Normal Stress @ Point 2 (kips/ft²)	Normal Stress @ Point 3 (kips/ft²)	Normal Stress @ Point 4 (kips/ft²)	Normal Stress @ Point 5 (kips/ft²)	Normal Stress @ Point 6 (kips/ft²)
1	0	D10K: D10K: Other PT Losses	0.00	0.00	0.00	0.00	0.00	0.00	0.00
1	1	D10K: D10K: Other PT Losses	0.00	0.00	0.00	0.00	0.00	0.00	0.00
1	2	D10K: D10K: Other PT Losses	0.00	0.00	0.00	0.00	0.00	0.00	0.00
2	0	D10K: D10K: Other PT Losses	0.46	-5.22	-5.23	-0.37	-0.37	-3.50	9.01
2	1	D10K: D10K: Other PT Losses	0.46	-2.94	-2.94	-0.04	-0.03	-1.91	5.57
2	2	D10K: D10K: Other PT Losses	0.46	-0.65	-0.66	0.30	0.30	-0.32	2.14
3	0	D10K: D10K: Other PT Losses	-2.88	-4.28	-4.29	-3.09	-3.08	-3.86	-0.77
3	1	D10K: D10K: Other PT Losses	-2.88	-3.88	-3.88	-3.03	-3.02	-3.58	-1.38
3	2	D10K: D10K: Other PT Losses	-2.88	-3.47	-3.48	-2.97	-2.96	-3.29	-1.99
4	0	D10K: D10K: Other PT Losses	-2.88	-3.47	-3.48	-2.97	-2.96	-3.29	-1.99
4	1	D10K: D10K: Other PT Losses	-2.88	-2.61	-2.61	-2.84	-2.84	-2.69	-3.29
4	2	D10K: D10K: Other PT Losses	-2.88	-1.74	-1.74	-2.72	-2.71	-2.09	-4.59
5	0	D10K: D10K: Other PT Losses	-2.88	-1.74	-1.74	-2.72	-2.71	-2.09	-4.59
5	1	D10K: D10K: Other PT Losses	-2.88	-0.87	-0.88	-2.59	-2.58	-1.48	-5.90
5	2	D10K: D10K: Other PT Losses	-2.88	0.00	-0.01	-2.46	-2.46	-0.88	-7.20
6	0	D10K: D10K: Other PT Losses	-2.88	0.00	-0.01	-2.46	-2.46	-0.88	-7.20
6	1	D10K: D10K: Other PT Losses	-2.88	0.11	0.10	-2.45	-2.44	-0.80	-7.37
6	2	D10K: D10K: Other PT Losses	-2.88	0.23	0.22	-2.43	-2.42	-0.72	-7.55
7	0	D10K: D10K: Other PT Losses	-2.73	-1.79	-1.79	-2.59	-2.58	-2.07	-4.13
7	1	D10K: D10K: Other PT Losses	-2.73	-0.94	-0.94	-2.47	-2.46	-1.48	-5.41
7	2	D10K: D10K: Other PT Losses	-2.73	-0.09	-0.10	-2.34	-2.34	-0.89	-6.68
8	0	D10K: D10K: Other PT Losses	-4.21	-1.96	-1.97	-3.88	-3.88	-2.65	-7.57
8	1	D10K: D10K: Other PT Losses	-4.21	-1.93	-1.94	-3.88	-3.87	-2.63	-7.62
8	2	D10K: D10K: Other PT Losses	-4.21	-1.90	-1.91	-3.87	-3.87	-2.60	-7.67
9	0	D10K: D10K: Other PT Losses	-4.21	-1.90	-1.91	-3.87	-3.87	-2.60	-7.67
9	1	D10K: D10K: Other PT Losses	-4.21	-1.82	-1.83	-3.86	-3.85	-2.55	-7.79
9	2	D10K: D10K: Other PT Losses	-4.21	-1.74	-1.75	-3.85	-3.84	-2.49	-7.91
10	0	D10K: D10K: Other PT Losses	-4.21	-1.74	-1.75	-3.85	-3.84	-2.49	-7.91
10	1	D10K: D10K: Other PT Losses	-4.21	-1.66	-1.67	-3.84	-3.83	-2.44	-8.03
10	2	D10K: D10K: Other PT Losses	-4.21	-1.58	-1.59	-3.83	-3.82	-2.38	-8.15
11	0	D10K: D10K: Other PT Losses	-4.21	-1.58	-1.59	-3.83	-3.82	-2.38	-8.15
11	1	D10K: D10K: Other PT Losses	-4.21	-1.57	-1.58	-3.83	-3.82	-2.37	-8.17
11	2	D10K: D10K: Other PT Losses	-4.21	-1.56	-1.56	-3.82	-3.82	-2.36	-8.19
12	0	D10K: D10K: Other PT Losses	-4.24	-2.41	-2.42	-3.97	-3.96	-2.97	-6.98
12	1	D10K: D10K: Other PT Losses	-4.24	-2.20	-2.21	-3.94	-3.93	-2.82	-7.28
12	2	D10K: D10K: Other PT Losses	-4.24	-2.00	-2.01	-3.91	-3.90	-2.68	-7.58
13	0	D10K: D10K: Other PT Losses	-4.56	-2.51	-2.52	-4.27	-4.26	-3.13	-7.65
13	1	D10K: D10K: Other PT Losses	-4.56	-2.59	-2.60	-4.28	-4.27	-3.20	-7.52
13	2	D10K: D10K: Other PT Losses	-4.56	-2.68	-2.69	-4.29	-4.29	-3.26	-7.38
14	0	D10K: D10K: Other PT Losses	-4.56	-2.68	-2.69	-4.29	-4.29	-3.26	-7.38
14	1	D10K: D10K: Other PT Losses	-4.56	-2.97	-2.98	-4.34	-4.33	-3.46	-6.96
14	2	D10K: D10K: Other PT Losses	-4.56	-3.25	-3.26	-4.38	-4.37	-3.65	-6.54
15	0	D10K: D10K: Other PT Losses	-4.56	-3.25	-3.26	-4.38	-4.37	-3.65	-6.54
15	1	D10K: D10K: Other PT Losses	-4.56	-3.53	-3.54	-4.42	-4.41	-3.85	-6.11
15	2	D10K: D10K: Other PT Losses	-4.56	-3.81	-3.82	-4.46	-4.45	-4.04	-5.69
16	0	D10K: D10K: Other PT Losses	-4.56	-3.81	-3.82	-4.46	-4.45	-4.04	-5.69
16	1	D10K: D10K: Other PT Losses	-4.56	-3.84	-3.85	-4.47	-4.45	-4.06	-5.64
16	2	D10K: D10K: Other PT Losses	-4.56	-3.87	-3.88	-4.47	-4.46	-4.09	-5.60

MEMBER STRESSES

DECK & CANOPY MEMBERS
D10K

(-) compression

			TEMPERATURE FALL (TU-)						
Member	Station	Result Case	(P/A) @ Centroid (kips/ft²)	Normal Stress @ Point 1 (kips/ft²)	Normal Stress @ Point 2 (kips/ft²)	Normal Stress @ Point 3 (kips/ft²)	Normal Stress @ Point 4 (kips/ft²)	Normal Stress @ Point 5 (kips/ft²)	Normal Stress @ Point 6 (kips/ft²)
17	0	D10K: D10K: Other PT Losses	-4.45	-3.70	-3.72	-4.35	-4.34	-3.94	-5.56
17	1	D10K: D10K: Other PT Losses	-4.45	-4.07	-4.08	-4.40	-4.39	-4.19	-5.01
17	2	D10K: D10K: Other PT Losses	-4.45	-4.43	-4.44	-4.45	-4.44	-4.44	-4.47
18	0	D10K: D10K: Other PT Losses	-3.97	-4.14	-4.15	-4.00	-3.99	-4.09	-3.69
18	1	D10K: D10K: Other PT Losses	-3.97	-3.86	-3.87	-3.96	-3.95	-3.90	-4.11
18	2	D10K: D10K: Other PT Losses	-3.97	-3.58	-3.60	-3.92	-3.90	-3.70	-4.53
19	0	D10K: D10K: Other PT Losses	-3.97	-3.58	-3.60	-3.92	-3.90	-3.70	-4.53
19	1	D10K: D10K: Other PT Losses	-3.97	-2.39	-2.41	-3.74	-3.73	-2.88	-6.32
19	2	D10K: D10K: Other PT Losses	-3.97	-1.21	-1.22	-3.57	-3.56	-2.05	-8.11
20	0	D10K: D10K: Other PT Losses	-3.97	-1.21	-1.22	-3.57	-3.56	-2.05	-8.11
20	1	D10K: D10K: Other PT Losses	-3.97	-0.02	-0.03	-3.40	-3.38	-1.22	-9.89
20	2	D10K: D10K: Other PT Losses	-3.97	1.17	1.16	-3.22	-3.21	-0.39	-11.68
21	0	D10K: D10K: Other PT Losses	-3.97	1.17	1.16	-3.22	-3.21	-0.39	-11.68
21	1	D10K: D10K: Other PT Losses	-3.97	1.38	1.37	-3.19	-3.18	-0.25	-11.99
21	2	D10K: D10K: Other PT Losses	-3.97	1.59	1.58	-3.16	-3.15	-0.10	-12.31
22	0	D10K: D10K: Other PT Losses	-3.06	3.48	3.47	-2.11	-2.10	1.49	-12.90
22	1	D10K: D10K: Other PT Losses	-3.06	2.44	2.43	-2.27	-2.25	0.77	-11.33
22	2	D10K: D10K: Other PT Losses	-3.06	1.41	1.39	-2.42	-2.40	0.04	-9.77
23	0	D10K: D10K: Other PT Losses	-2.39	3.39	3.38	-1.55	-1.54	1.63	-11.07
23	1	D10K: D10K: Other PT Losses	-2.39	2.93	2.91	-1.62	-1.61	1.30	-10.38
23	2	D10K: D10K: Other PT Losses	-2.39	2.46	2.45	-1.69	-1.68	0.98	-9.68
24	0	D10K: D10K: Other PT Losses	-2.39	2.46	2.45	-1.69	-1.68	0.98	-9.68
24	1	D10K: D10K: Other PT Losses	-2.39	-0.65	-0.67	-2.15	-2.13	-1.19	-5.00
24	2	D10K: D10K: Other PT Losses	-2.39	-3.76	-3.78	-2.60	-2.59	-3.35	-0.32
25	0	D10K: D10K: Other PT Losses	-2.39	-3.76	-3.78	-2.60	-2.59	-3.35	-0.32
25	1	D10K: D10K: Other PT Losses	-2.39	-6.88	-6.90	-3.06	-3.04	-5.52	4.36
25	2	D10K: D10K: Other PT Losses	-2.39	-9.99	-10.01	-3.51	-3.50	-7.69	9.05
26	0	D10K: D10K: Other PT Losses	-2.39	-9.99	-10.01	-3.51	-3.50	-7.69	9.05
26	1	D10K: D10K: Other PT Losses	-2.39	-10.79	-10.81	-3.63	-3.61	-8.24	10.25
26	2	D10K: D10K: Other PT Losses	-2.39	-11.59	-11.61	-3.75	-3.73	-8.80	11.45
29	0	D10K: D10K: Other PT Losses	-3.23	-12.90	-13.00	-4.70	-4.60	-10.00	11.39
29	1	D10K: D10K: Other PT Losses	-3.23	-11.93	-12.03	-4.56	-4.46	-9.32	9.92
29	2	D10K: D10K: Other PT Losses	-3.23	-10.95	-11.05	-4.42	-4.32	-8.64	8.46
30	0	D10K: D10K: Other PT Losses	-3.23	-10.95	-11.05	-4.42	-4.32	-8.64	8.46
30	1	D10K: D10K: Other PT Losses	-3.23	-7.18	-7.27	-3.86	-3.77	-6.01	2.78
30	2	D10K: D10K: Other PT Losses	-3.23	-3.41	-3.49	-3.30	-3.22	-3.38	-2.90
31	0	D10K: D10K: Other PT Losses	-3.23	-3.41	-3.49	-3.30	-3.22	-3.38	-2.90
31	1	D10K: D10K: Other PT Losses	-3.23	0.36	0.29	-2.75	-2.67	-0.75	-8.58
31	2	D10K: D10K: Other PT Losses	-3.23	4.14	4.07	-2.19	-2.12	1.88	-14.25
32	0	D10K: D10K: Other PT Losses	-3.23	4.14	4.07	-2.19	-2.12	1.88	-14.25
32	1	D10K: D10K: Other PT Losses	-3.23	4.69	4.63	-2.11	-2.04	2.26	-15.09
32	2	D10K: D10K: Other PT Losses	-3.23	5.24	5.18	-2.03	-1.96	2.65	-15.92
33	0	D10K: D10K: Other PT Losses	-4.19	3.00	2.94	-3.18	-3.12	0.79	-14.96
33	1	D10K: D10K: Other PT Losses	-4.19	3.67	3.61	-3.08	-3.02	1.26	-15.97
33	2	D10K: D10K: Other PT Losses	-4.19	4.35	4.29	-2.98	-2.92	1.73	-16.99
34	0	D10K: D10K: Other PT Losses	-4.23	2.24	2.18	-3.32	-3.26	0.25	-13.91
34	1	D10K: D10K: Other PT Losses	-4.23	2.04	1.98	-3.35	-3.29	0.11	-13.62
34	2	D10K: D10K: Other PT Losses	-4.23	1.84	1.78	-3.38	-3.32	-0.02	-13.32

MEMBER STRESSES

DECK & CANOPY MEMBERS
D10K

(-) compression

			TEMPERATURE FALL (TU-)						
Member	Station	Result Case	(P/A) @ Centroid (kips/ft²)	Normal Stress @ Point 1 (kips/ft²)	Normal Stress @ Point 2 (kips/ft²)	Normal Stress @ Point 3 (kips/ft²)	Normal Stress @ Point 4 (kips/ft²)	Normal Stress @ Point 5 (kips/ft²)	Normal Stress @ Point 6 (kips/ft²)
35	0	D10K: D10K: Other PT Losses	-4.23	1.84	1.78	-3.38	-3.32	-0.02	-13.32
35	1	D10K: D10K: Other PT Losses	-4.23	1.23	1.18	-3.47	-3.41	-0.45	-12.41
35	2	D10K: D10K: Other PT Losses	-4.23	0.63	0.57	-3.55	-3.50	-0.87	-11.49
36	0	D10K: D10K: Other PT Losses	-4.23	0.63	0.57	-3.55	-3.50	-0.87	-11.49
36	1	D10K: D10K: Other PT Losses	-4.23	0.01	-0.04	-3.64	-3.59	-1.29	-10.58
36	2	D10K: D10K: Other PT Losses	-4.23	-0.60	-0.64	-3.73	-3.68	-1.72	-9.66
37	0	D10K: D10K: Other PT Losses	-4.23	-0.60	-0.64	-3.73	-3.68	-1.72	-9.66
37	1	D10K: D10K: Other PT Losses	-4.23	-0.91	-0.96	-3.77	-3.73	-1.94	-9.19
37	2	D10K: D10K: Other PT Losses	-4.23	-1.23	-1.27	-3.82	-3.77	-2.16	-8.72
38	0	D10K: D10K: Other PT Losses	-4.75	-1.97	-2.02	-4.37	-4.32	-2.83	-8.89
38	1	D10K: D10K: Other PT Losses	-4.75	-1.74	-1.78	-4.34	-4.29	-2.67	-9.25
38	2	D10K: D10K: Other PT Losses	-4.75	-1.50	-1.55	-4.30	-4.26	-2.50	-9.60
39	0	D10K: D10K: Other PT Losses	-4.68	-1.73	-1.77	-4.27	-4.23	-2.64	-9.08
39	1	D10K: D10K: Other PT Losses	-4.68	-1.64	-1.69	-4.26	-4.21	-2.58	-9.21
39	2	D10K: D10K: Other PT Losses	-4.68	-1.56	-1.60	-4.25	-4.20	-2.52	-9.34
40	0	D10K: D10K: Other PT Losses	-4.68	-1.56	-1.60	-4.25	-4.20	-2.52	-9.34
40	1	D10K: D10K: Other PT Losses	-4.68	-1.30	-1.34	-4.21	-4.17	-2.34	-9.73
40	2	D10K: D10K: Other PT Losses	-4.68	-1.04	-1.08	-4.17	-4.13	-2.16	-10.11
41	0	D10K: D10K: Other PT Losses	-4.68	-1.04	-1.08	-4.17	-4.13	-2.16	-10.11
41	1	D10K: D10K: Other PT Losses	-4.68	-0.78	-0.82	-4.13	-4.09	-1.98	-10.50
41	2	D10K: D10K: Other PT Losses	-4.68	-0.53	-0.56	-4.09	-4.06	-1.80	-10.89
42	0	D10K: D10K: Other PT Losses	-4.68	-0.53	-0.56	-4.09	-4.06	-1.80	-10.89
42	1	D10K: D10K: Other PT Losses	-4.68	-0.37	-0.40	-4.07	-4.03	-1.69	-11.13
42	2	D10K: D10K: Other PT Losses	-4.68	-0.21	-0.24	-4.04	-4.01	-1.58	-11.37
43	0	D10K: D10K: Other PT Losses	-4.29	0.54	0.51	-3.60	-3.57	-0.94	-11.54
43	1	D10K: D10K: Other PT Losses	-4.29	0.38	0.35	-3.63	-3.60	-1.05	-11.29
43	2	D10K: D10K: Other PT Losses	-4.29	0.21	0.18	-3.65	-3.62	-1.17	-11.04
44	0	D10K: D10K: Other PT Losses	-4.35	1.47	1.44	-3.52	-3.49	-0.31	-13.08
44	1	D10K: D10K: Other PT Losses	-4.35	1.54	1.51	-3.51	-3.48	-0.26	-13.19
44	2	D10K: D10K: Other PT Losses	-4.35	1.61	1.59	-3.50	-3.47	-0.21	-13.30
45	0	D10K: D10K: Other PT Losses	-4.35	1.61	1.59	-3.50	-3.47	-0.21	-13.30
45	1	D10K: D10K: Other PT Losses	-4.35	1.82	1.79	-3.46	-3.44	-0.07	-13.61
45	2	D10K: D10K: Other PT Losses	-4.35	2.02	2.00	-3.43	-3.41	0.08	-13.92
46	0	D10K: D10K: Other PT Losses	-4.35	2.02	2.00	-3.43	-3.41	0.08	-13.92
46	1	D10K: D10K: Other PT Losses	-4.35	2.23	2.21	-3.40	-3.38	0.22	-14.23
46	2	D10K: D10K: Other PT Losses	-4.35	2.43	2.41	-3.37	-3.35	0.36	-14.54
47	0	D10K: D10K: Other PT Losses	-4.35	2.43	2.41	-3.37	-3.35	0.36	-14.54
47	1	D10K: D10K: Other PT Losses	-4.35	2.58	2.56	-3.35	-3.33	0.47	-14.76
47	2	D10K: D10K: Other PT Losses	-4.35	2.72	2.71	-3.33	-3.31	0.57	-14.98
48	0	D10K: D10K: Other PT Losses	-2.86	5.68	5.66	-1.62	-1.61	3.08	-15.68
48	1	D10K: D10K: Other PT Losses	-2.86	5.06	5.04	-1.71	-1.70	2.64	-14.75
48	2	D10K: D10K: Other PT Losses	-2.86	4.44	4.42	-1.80	-1.79	2.21	-13.82
49	0	D10K: D10K: Other PT Losses	-3.15	7.69	7.67	-1.57	-1.56	4.39	-19.42
49	1	D10K: D10K: Other PT Losses	-3.15	7.13	7.12	-1.65	-1.64	4.00	-18.59
49	2	D10K: D10K: Other PT Losses	-3.15	6.58	6.56	-1.73	-1.72	3.62	-17.76
50	0	D10K: D10K: Other PT Losses	-3.15	6.58	6.56	-1.73	-1.72	3.62	-17.76
50	1	D10K: D10K: Other PT Losses	-3.15	5.11	5.10	-1.95	-1.94	2.60	-15.55
50	2	D10K: D10K: Other PT Losses	-3.15	3.64	3.64	-2.16	-2.15	1.58	-13.35

MEMBER STRESSES

DECK & CANOPY MEMBERS
D10K

(-) compression

			TEMPERATURE FALL (TU-)						
Member	Station	Result Case	(P/A) @ Centroid (kips/ft²)	Normal Stress @ Point 1 (kips/ft²)	Normal Stress @ Point 2 (kips/ft²)	Normal Stress @ Point 3 (kips/ft²)	Normal Stress @ Point 4 (kips/ft²)	Normal Stress @ Point 5 (kips/ft²)	Normal Stress @ Point 6 (kips/ft²)
51	0	D10K: D10K: Other PT Losses	-3.15	3.64	3.64	-2.16	-2.15	1.58	-13.35
51	1	D10K: D10K: Other PT Losses	-3.15	2.18	2.17	-2.37	-2.37	0.56	-11.15
51	2	D10K: D10K: Other PT Losses	-3.15	0.71	0.71	-2.59	-2.58	-0.46	-8.94
52	0	D10K: D10K: Other PT Losses	-3.15	0.71	0.71	-2.59	-2.58	-0.46	-8.94
52	1	D10K: D10K: Other PT Losses	-3.15	-0.46	-0.46	-2.75	-2.75	-1.27	-7.19
52	2	D10K: D10K: Other PT Losses	-3.15	-1.62	-1.62	-2.92	-2.92	-2.08	-5.44
60	0	D10K: D10K: Other PT Losses	0.00	0.00	0.00	0.00	0.00	0.00	0.00
60	1	D10K: D10K: Other PT Losses	0.00	0.00	0.00	0.00	0.00	0.00	0.00
60	2	D10K: D10K: Other PT Losses	0.00	0.00	0.00	0.00	0.00	0.00	0.00
101	0	D10K: D10K: Other PT Losses	0.00	0.00	0.00	0.00	0.00	0.00	0.00
101	1	D10K: D10K: Other PT Losses	0.00	0.00	0.00	0.00	0.00	0.00	0.00
101	2	D10K: D10K: Other PT Losses	0.00	0.00	0.00	0.00	0.00	0.00	0.00
102	0	D10K: D10K: Other PT Losses	0.00	0.00	0.00	0.00	0.00	0.00	0.00
102	1	D10K: D10K: Other PT Losses	0.00	0.00	0.00	0.00	0.00	0.00	0.00
102	2	D10K: D10K: Other PT Losses	0.00	0.00	0.00	0.00	0.00	0.00	0.00
103	0	D10K: D10K: Other PT Losses	0.00	0.00	0.00	0.00	0.00	0.00	0.00
103	1	D10K: D10K: Other PT Losses	0.00	0.00	0.00	0.00	0.00	0.00	0.00
103	2	D10K: D10K: Other PT Losses	0.00	0.00	0.00	0.00	0.00	0.00	0.00
104	0	D10K: D10K: Other PT Losses	0.00	0.00	0.00	0.00	0.00	0.00	0.00
104	1	D10K: D10K: Other PT Losses	0.00	0.00	0.00	0.00	0.00	0.00	0.00
104	2	D10K: D10K: Other PT Losses	0.00	0.00	0.00	0.00	0.00	0.00	0.00
106	0	D10K: D10K: Other PT Losses	4.08	-3.98	-3.98	12.93	12.93	-2.19	5.74
106	1	D10K: D10K: Other PT Losses	4.08	-3.38	-3.38	12.26	12.26	-1.72	5.61
106	2	D10K: D10K: Other PT Losses	4.08	-2.77	-2.77	11.60	11.60	-1.25	5.49
107	0	D10K: D10K: Other PT Losses	4.08	-2.77	-2.77	11.60	11.60	-1.25	5.49
107	1	D10K: D10K: Other PT Losses	4.08	0.75	0.75	7.73	7.73	1.49	4.76
107	2	D10K: D10K: Other PT Losses	4.08	4.27	4.27	3.86	3.86	4.23	4.04
108	0	D10K: D10K: Other PT Losses	4.08	4.27	4.27	3.86	3.86	4.23	4.04
108	1	D10K: D10K: Other PT Losses	4.08	7.64	7.63	0.17	0.17	6.84	3.34
108	2	D10K: D10K: Other PT Losses	4.08	11.00	11.00	-3.52	-3.52	9.45	2.65
109	0	D10K: D10K: Other PT Losses	4.08	11.00	11.00	-3.52	-3.52	9.45	2.65
109	1	D10K: D10K: Other PT Losses	4.08	12.21	12.20	-4.85	-4.85	10.39	2.40
109	2	D10K: D10K: Other PT Losses	4.08	13.41	13.41	-6.18	-6.17	11.33	2.15
111	0	D10K: D10K: Other PT Losses	4.91	8.03	8.02	1.50	1.50	7.33	4.27
111	1	D10K: D10K: Other PT Losses	4.91	7.93	7.93	1.60	1.61	7.26	4.29
111	2	D10K: D10K: Other PT Losses	4.91	7.83	7.83	1.71	1.71	7.18	4.31
112	0	D10K: D10K: Other PT Losses	4.91	7.83	7.83	1.71	1.71	7.18	4.31
112	1	D10K: D10K: Other PT Losses	4.91	7.43	7.42	2.16	2.16	6.86	4.40
112	2	D10K: D10K: Other PT Losses	4.91	7.02	7.01	2.61	2.61	6.55	4.48
113	0	D10K: D10K: Other PT Losses	4.91	7.02	7.01	2.61	2.61	6.55	4.48
113	1	D10K: D10K: Other PT Losses	4.91	6.57	6.57	3.09	3.10	6.20	4.57
113	2	D10K: D10K: Other PT Losses	4.91	6.13	6.12	3.58	3.59	5.86	4.66
114	0	D10K: D10K: Other PT Losses	4.91	6.13	6.12	3.58	3.59	5.86	4.66
114	1	D10K: D10K: Other PT Losses	4.91	6.03	6.02	3.69	3.70	5.78	4.69
114	2	D10K: D10K: Other PT Losses	4.91	5.93	5.92	3.80	3.80	5.70	4.71
116	0	D10K: D10K: Other PT Losses	3.09	7.15	7.15	-1.37	-1.37	6.25	2.25
116	1	D10K: D10K: Other PT Losses	3.09	6.94	6.94	-1.14	-1.14	6.08	2.30
116	2	D10K: D10K: Other PT Losses	3.09	6.73	6.73	-0.91	-0.91	5.92	2.34

MEMBER STRESSES

DECK & CANOPY MEMBERS
D10K

(-) compression

			TEMPERATURE FALL (TU-)						
Member	Station	Result Case	(P/A) @ Centroid (kips/ft²)	Normal Stress @ Point 1 (kips/ft²)	Normal Stress @ Point 2 (kips/ft²)	Normal Stress @ Point 3 (kips/ft²)	Normal Stress @ Point 4 (kips/ft²)	Normal Stress @ Point 5 (kips/ft²)	Normal Stress @ Point 6 (kips/ft²)
117	0	D10K: D10K: Other PT Losses	3.09	6.73	6.73	-0.91	-0.91	5.92	2.34
117	1	D10K: D10K: Other PT Losses	3.09	5.32	5.31	0.64	0.64	4.82	2.63
117	2	D10K: D10K: Other PT Losses	3.09	3.91	3.90	2.19	2.19	3.72	2.92
118	0	D10K: D10K: Other PT Losses	3.09	3.91	3.90	2.19	2.19	3.72	2.92
118	1	D10K: D10K: Other PT Losses	3.09	2.51	2.50	3.73	3.74	2.63	3.21
118	2	D10K: D10K: Other PT Losses	3.09	1.10	1.09	5.27	5.28	1.54	3.50
119	0	D10K: D10K: Other PT Losses	3.09	1.10	1.09	5.27	5.28	1.54	3.50
119	1	D10K: D10K: Other PT Losses	3.09	0.82	0.81	5.58	5.59	1.32	3.56
119	2	D10K: D10K: Other PT Losses	3.09	0.53	0.53	5.89	5.90	1.10	3.62
121	0	D10K: D10K: Other PT Losses	-3.00	4.11	4.10	-10.80	-10.80	2.52	-4.46
121	1	D10K: D10K: Other PT Losses	-3.00	3.67	3.67	-10.33	-10.32	2.18	-4.37
121	2	D10K: D10K: Other PT Losses	-3.00	3.24	3.23	-9.86	-9.85	1.85	-4.29
122	0	D10K: D10K: Other PT Losses	-3.00	3.24	3.23	-9.86	-9.85	1.85	-4.29
122	1	D10K: D10K: Other PT Losses	-3.00	0.26	0.25	-6.58	-6.57	-0.47	-3.67
122	2	D10K: D10K: Other PT Losses	-3.00	-2.72	-2.74	-3.30	-3.29	-2.79	-3.06
123	0	D10K: D10K: Other PT Losses	-3.00	-2.72	-2.74	-3.30	-3.29	-2.79	-3.06
123	1	D10K: D10K: Other PT Losses	-3.00	-5.71	-5.72	-0.03	-0.02	-5.11	-2.44
123	2	D10K: D10K: Other PT Losses	-3.00	-8.69	-8.71	3.25	3.26	-7.43	-1.83
124	0	D10K: D10K: Other PT Losses	-3.00	-8.69	-8.71	3.25	3.26	-7.43	-1.83
124	1	D10K: D10K: Other PT Losses	-3.00	-9.07	-9.08	3.66	3.67	-7.72	-1.75
124	2	D10K: D10K: Other PT Losses	-3.00	-9.45	-9.46	4.08	4.09	-8.02	-1.67
126	0	D10K: D10K: Other PT Losses	-20.22	-5.80	-5.81	-36.05	-36.04	-9.02	-23.19
126	1	D10K: D10K: Other PT Losses	-20.22	-7.47	-7.49	-34.21	-34.20	-10.32	-22.84
126	2	D10K: D10K: Other PT Losses	-20.22	-9.15	-9.16	-32.37	-32.36	-11.62	-22.50
127	0	D10K: D10K: Other PT Losses	-20.22	-9.15	-9.16	-32.37	-32.36	-11.62	-22.50
127	1	D10K: D10K: Other PT Losses	-20.22	-15.04	-15.05	-25.91	-25.89	-16.20	-21.28
127	2	D10K: D10K: Other PT Losses	-20.22	-20.93	-20.95	-19.44	-19.42	-20.78	-20.07
128	0	D10K: D10K: Other PT Losses	-20.22	-20.93	-20.95	-19.44	-19.42	-20.78	-20.07
128	1	D10K: D10K: Other PT Losses	-20.22	-26.96	-26.98	-12.81	-12.80	-25.47	-18.83
133	0	D10K: D10K: Other PT Losses	-19.23	-32.80	-32.83	-4.33	-4.31	-29.79	-16.44
133	1	D10K: D10K: Other PT Losses	-19.23	-27.08	-27.11	-10.61	-10.59	-25.34	-17.62
133	2	D10K: D10K: Other PT Losses	-19.23	-21.36	-21.38	-16.90	-16.88	-20.89	-18.79
134	0	D10K: D10K: Other PT Losses	-19.23	-21.36	-21.38	-16.90	-16.88	-20.89	-18.79
134	1	D10K: D10K: Other PT Losses	-19.23	-15.62	-15.64	-23.19	-23.18	-16.44	-19.97
134	2	D10K: D10K: Other PT Losses	-19.23	-9.89	-9.91	-29.49	-29.48	-11.98	-21.16
135	0	D10K: D10K: Other PT Losses	-19.23	-9.89	-9.91	-29.49	-29.48	-11.98	-21.16
135	1	D10K: D10K: Other PT Losses	-19.23	-8.44	-8.46	-31.09	-31.07	-10.85	-21.45
135	2	D10K: D10K: Other PT Losses	-19.23	-6.98	-7.00	-32.68	-32.66	-9.72	-21.75
137	0	D10K: D10K: Other PT Losses	-0.75	-13.36	-13.38	13.09	13.11	-10.56	1.84
137	1	D10K: D10K: Other PT Losses	-0.75	-11.65	-11.66	11.21	11.23	-9.23	1.49
137	2	D10K: D10K: Other PT Losses	-0.75	-9.93	-9.95	9.33	9.34	-7.89	1.14
138	0	D10K: D10K: Other PT Losses	-0.75	-9.93	-9.95	9.33	9.34	-7.89	1.14
138	1	D10K: D10K: Other PT Losses	-0.75	-4.80	-4.81	3.69	3.70	-3.90	0.08
138	2	D10K: D10K: Other PT Losses	-0.75	0.34	0.32	-1.95	-1.93	0.09	-0.98
139	0	D10K: D10K: Other PT Losses	-0.75	0.34	0.32	-1.95	-1.93	0.09	-0.98
139	1	D10K: D10K: Other PT Losses	-0.75	5.82	5.80	-7.96	-7.95	4.35	-2.10
139	2	D10K: D10K: Other PT Losses	-0.75	11.30	11.28	-13.98	-13.96	8.60	-3.23

MEMBER STRESSES

DECK & CANOPY MEMBERS
D10K

(-) compression

			TEMPERATURE FALL (TU-)						
Member	Station	Result Case	(P/A) @ Centroid (kips/ft²)	Normal Stress @ Point 1 (kips/ft²)	Normal Stress @ Point 2 (kips/ft²)	Normal Stress @ Point 3 (kips/ft²)	Normal Stress @ Point 4 (kips/ft²)	Normal Stress @ Point 5 (kips/ft²)	Normal Stress @ Point 6 (kips/ft²)
140	0	D10K: D10K: Other PT Losses	-0.75	11.30	11.28	-13.98	-13.96	8.61	-3.23
140	1	D10K: D10K: Other PT Losses	-0.75	12.76	12.75	-15.59	-15.57	9.74	-3.53
140	2	D10K: D10K: Other PT Losses	-0.75	14.23	14.21	-17.20	-17.18	10.88	-3.83
142	0	D10K: D10K: Other PT Losses	3.27	1.11	1.10	5.63	5.65	1.59	3.71
142	1	D10K: D10K: Other PT Losses	3.27	2.10	2.08	4.55	4.57	2.35	3.51
142	2	D10K: D10K: Other PT Losses	3.27	3.08	3.07	3.47	3.48	3.12	3.31
143	0	D10K: D10K: Other PT Losses	3.27	3.08	3.07	3.47	3.48	3.12	3.31
143	1	D10K: D10K: Other PT Losses	3.27	5.05	5.04	1.31	1.32	4.65	2.90
143	2	D10K: D10K: Other PT Losses	3.27	7.03	7.01	-0.86	-0.85	6.18	2.49
144	0	D10K: D10K: Other PT Losses	3.27	7.03	7.01	-0.86	-0.85	6.18	2.49
144	1	D10K: D10K: Other PT Losses	3.27	9.20	9.19	-3.25	-3.24	7.87	2.05
144	2	D10K: D10K: Other PT Losses	3.27	11.38	11.37	-5.64	-5.63	9.57	1.60
145	0	D10K: D10K: Other PT Losses	3.27	11.38	11.37	-5.64	-5.63	9.57	1.60
145	1	D10K: D10K: Other PT Losses	3.27	11.93	11.92	-6.25	-6.24	10.00	1.48
145	2	D10K: D10K: Other PT Losses	3.27	12.49	12.48	-6.86	-6.85	10.43	1.37
147	0	D10K: D10K: Other PT Losses	4.50	10.52	10.51	-2.11	-2.10	9.17	3.26
147	1	D10K: D10K: Other PT Losses	4.50	10.42	10.40	-2.00	-1.99	9.09	3.28
147	2	D10K: D10K: Other PT Losses	4.50	10.31	10.30	-1.88	-1.87	9.01	3.30
148	0	D10K: D10K: Other PT Losses	4.50	10.31	10.30	-1.88	-1.87	9.01	3.30
148	1	D10K: D10K: Other PT Losses	4.50	10.10	10.09	-1.64	-1.63	8.84	3.35
148	2	D10K: D10K: Other PT Losses	4.50	9.88	9.87	-1.40	-1.40	8.67	3.39
149	0	D10K: D10K: Other PT Losses	4.50	9.88	9.87	-1.40	-1.40	8.67	3.39
149	1	D10K: D10K: Other PT Losses	4.50	9.69	9.68	-1.20	-1.19	8.53	3.43
149	2	D10K: D10K: Other PT Losses	4.50	9.50	9.49	-0.99	-0.98	8.38	3.47
150	0	D10K: D10K: Other PT Losses	4.50	9.50	9.49	-0.99	-0.98	8.38	3.47
150	1	D10K: D10K: Other PT Losses	4.50	9.40	9.39	-0.88	-0.88	8.31	3.49
150	2	D10K: D10K: Other PT Losses	4.50	9.30	9.29	-0.77	-0.77	8.23	3.51
152	0	D10K: D10K: Other PT Losses	3.84	22.08	22.07	-16.19	-16.18	18.01	0.08
152	1	D10K: D10K: Other PT Losses	3.84	19.23	19.22	-13.06	-13.05	15.80	0.67
152	2	D10K: D10K: Other PT Losses	3.84	16.38	16.37	-9.93	-9.92	13.58	1.26
153	0	D10K: D10K: Other PT Losses	3.84	16.38	16.37	-9.93	-9.92	13.58	1.26
153	1	D10K: D10K: Other PT Losses	3.84	11.72	11.71	-4.82	-4.81	9.96	2.22
153	2	D10K: D10K: Other PT Losses	3.84	7.06	7.06	0.30	0.30	6.34	3.18
154	0	D10K: D10K: Other PT Losses	3.84	7.06	7.06	0.30	0.30	6.34	3.18
154	1	D10K: D10K: Other PT Losses	3.84	2.01	2.00	5.85	5.86	2.41	4.22
154	2	D10K: D10K: Other PT Losses	3.84	-3.05	-3.05	11.40	11.41	-1.52	5.26
155	0	D10K: D10K: Other PT Losses	3.84	-3.05	-3.06	11.40	11.40	-1.52	5.26
155	1	D10K: D10K: Other PT Losses	3.84	-4.63	-4.64	13.14	13.14	-2.75	5.58
155	2	D10K: D10K: Other PT Losses	3.84	-6.22	-6.22	14.88	14.88	-3.98	5.91
157	0	D10K: D10K: Other PT Losses	0.94	17.51	17.50	-17.25	-17.25	13.81	-2.47
157	1	D10K: D10K: Other PT Losses	0.94	14.97	14.96	-14.46	-14.46	11.84	-1.95
157	2	D10K: D10K: Other PT Losses	0.94	12.43	12.43	-11.68	-11.67	9.87	-1.43
158	0	D10K: D10K: Other PT Losses	0.94	12.43	12.43	-11.68	-11.67	9.87	-1.43
158	1	D10K: D10K: Other PT Losses	0.94	4.30	4.30	-2.75	-2.75	3.55	0.25
158	2	D10K: D10K: Other PT Losses	0.94	-3.83	-3.83	6.18	6.18	-2.77	1.92
159	0	D10K: D10K: Other PT Losses	0.94	-3.83	-3.83	6.18	6.18	-2.77	1.92
159	1	D10K: D10K: Other PT Losses	0.94	-12.07	-12.08	15.23	15.23	-9.18	3.62
159	2	D10K: D10K: Other PT Losses	0.94	-20.32	-20.32	24.28	24.28	-15.58	5.32

MEMBER STRESSES

DECK & CANOPY MEMBERS
D10K

(-) compression

			TU(+) + TEMP. DIFF.						
Member	Station	Result Case	(P/A) @ Centroid (kips/ft²)	Normal Stress @ Point 1 (kips/ft²)	Normal Stress @ Point 2 (kips/ft²)	Normal Stress @ Point 3 (kips/ft²)	Normal Stress @ Point 4 (kips/ft²)	Normal Stress @ Point 5 (kips/ft²)	Normal Stress @ Point 6 (kips/ft²)
1	0	D10K: D10K: Other PT Losses	0.00	0.00	0.00	0.00	0.00	0.00	0.00
1	1	D10K: D10K: Other PT Losses	0.00	0.00	0.00	0.00	0.00	0.00	0.00
1	2	D10K: D10K: Other PT Losses	0.00	0.00	0.00	0.00	0.00	0.00	0.00
2	0	D10K: D10K: Other PT Losses	-0.50	5.50	5.50	0.38	0.38	3.67	-9.52
2	1	D10K: D10K: Other PT Losses	-0.50	0.94	0.95	-0.29	-0.29	0.51	-2.67
2	2	D10K: D10K: Other PT Losses	-0.50	-3.61	-3.60	-0.95	-0.96	-2.66	4.17
3	0	D10K: D10K: Other PT Losses	6.28	4.88	4.88	6.08	6.08	5.31	8.39
3	1	D10K: D10K: Other PT Losses	6.28	4.49	4.50	6.02	6.02	5.04	8.97
3	2	D10K: D10K: Other PT Losses	6.28	4.10	4.11	5.97	5.96	4.77	9.55
4	0	D10K: D10K: Other PT Losses	6.28	4.10	4.11	5.97	5.96	4.77	9.55
4	1	D10K: D10K: Other PT Losses	6.28	3.28	3.28	5.85	5.84	4.19	10.80
4	2	D10K: D10K: Other PT Losses	6.28	2.45	2.46	5.73	5.72	3.62	12.04
5	0	D10K: D10K: Other PT Losses	6.28	2.45	2.46	5.73	5.72	3.62	12.04
5	1	D10K: D10K: Other PT Losses	6.28	1.62	1.63	5.61	5.60	3.04	13.28
5	2	D10K: D10K: Other PT Losses	6.28	0.80	0.81	5.49	5.48	2.47	14.52
6	0	D10K: D10K: Other PT Losses	6.28	0.80	0.81	5.49	5.48	2.47	14.52
6	1	D10K: D10K: Other PT Losses	6.28	0.69	0.70	5.47	5.46	2.39	14.69
6	2	D10K: D10K: Other PT Losses	6.28	0.58	0.59	5.45	5.44	2.31	14.85
7	0	D10K: D10K: Other PT Losses	6.00	4.23	4.24	5.74	5.73	4.77	8.64
7	1	D10K: D10K: Other PT Losses	6.00	2.72	2.73	5.52	5.51	3.72	10.91
7	2	D10K: D10K: Other PT Losses	6.00	1.21	1.22	5.30	5.29	2.67	13.19
8	0	D10K: D10K: Other PT Losses	8.63	4.56	4.57	8.04	8.03	5.80	14.74
8	1	D10K: D10K: Other PT Losses	8.63	4.47	4.48	8.03	8.02	5.74	14.87
8	2	D10K: D10K: Other PT Losses	8.63	4.38	4.39	8.01	8.00	5.68	15.01
9	0	D10K: D10K: Other PT Losses	8.63	4.38	4.39	8.01	8.00	5.68	15.01
9	1	D10K: D10K: Other PT Losses	8.63	4.15	4.17	7.98	7.97	5.52	15.35
9	2	D10K: D10K: Other PT Losses	8.63	3.92	3.94	7.95	7.93	5.36	15.69
10	0	D10K: D10K: Other PT Losses	8.63	3.92	3.94	7.95	7.93	5.36	15.69
10	1	D10K: D10K: Other PT Losses	8.63	3.70	3.71	7.92	7.90	5.20	16.03
10	2	D10K: D10K: Other PT Losses	8.63	3.47	3.49	7.88	7.87	5.04	16.37
11	0	D10K: D10K: Other PT Losses	8.63	3.47	3.49	7.88	7.87	5.04	16.37
11	1	D10K: D10K: Other PT Losses	8.63	3.44	3.46	7.88	7.86	5.02	16.42
11	2	D10K: D10K: Other PT Losses	8.63	3.41	3.43	7.88	7.86	5.00	16.46
12	0	D10K: D10K: Other PT Losses	8.68	4.81	4.83	8.13	8.11	5.99	14.49
12	1	D10K: D10K: Other PT Losses	8.68	4.71	4.73	8.11	8.09	5.92	14.64
12	2	D10K: D10K: Other PT Losses	8.68	4.60	4.62	8.10	8.08	5.85	14.80
13	0	D10K: D10K: Other PT Losses	8.88	5.12	5.14	8.34	8.32	6.27	14.52
13	1	D10K: D10K: Other PT Losses	8.88	5.26	5.28	8.36	8.34	6.37	14.30
13	2	D10K: D10K: Other PT Losses	8.88	5.41	5.42	8.38	8.36	6.47	14.09
14	0	D10K: D10K: Other PT Losses	8.88	5.41	5.42	8.38	8.36	6.47	14.09
14	1	D10K: D10K: Other PT Losses	8.88	5.86	5.88	8.45	8.43	6.78	13.40
14	2	D10K: D10K: Other PT Losses	8.88	6.31	6.33	8.52	8.49	7.10	12.72
15	0	D10K: D10K: Other PT Losses	8.88	6.31	6.33	8.52	8.49	7.10	12.72
15	1	D10K: D10K: Other PT Losses	8.88	6.76	6.78	8.58	8.56	7.41	12.04
15	2	D10K: D10K: Other PT Losses	8.88	7.21	7.24	8.65	8.62	7.73	11.37
16	0	D10K: D10K: Other PT Losses	8.88	7.21	7.24	8.65	8.62	7.73	11.37
16	1	D10K: D10K: Other PT Losses	8.88	7.26	7.29	8.66	8.63	7.76	11.29
16	2	D10K: D10K: Other PT Losses	8.88	7.32	7.34	8.66	8.64	7.80	11.21

MEMBER STRESSES

DECK & CANOPY MEMBERS
D10K

(-) compression

			TU(+) + TEMP. DIFF.						
Member	Station	Result Case	(P/A) @ Centroid (kips/ft²)	Normal Stress @ Point 1 (kips/ft²)	Normal Stress @ Point 2 (kips/ft²)	Normal Stress @ Point 3 (kips/ft²)	Normal Stress @ Point 4 (kips/ft²)	Normal Stress @ Point 5 (kips/ft²)	Normal Stress @ Point 6 (kips/ft²)
17	0	D10K: D10K: Other PT Losses	8.53	6.52	6.54	8.25	8.23	7.14	11.53
17	1	D10K: D10K: Other PT Losses	8.53	7.58	7.61	8.41	8.38	7.88	9.93
17	2	D10K: D10K: Other PT Losses	8.53	8.65	8.67	8.56	8.54	8.62	8.33
18	0	D10K: D10K: Other PT Losses	7.20	7.44	7.46	7.25	7.23	7.37	6.84
18	1	D10K: D10K: Other PT Losses	7.20	7.06	7.08	7.20	7.17	7.11	7.40
18	2	D10K: D10K: Other PT Losses	7.20	6.68	6.71	7.14	7.12	6.85	7.97
19	0	D10K: D10K: Other PT Losses	7.20	6.68	6.71	7.14	7.12	6.85	7.97
19	1	D10K: D10K: Other PT Losses	7.20	5.08	5.10	6.91	6.88	5.73	10.38
19	2	D10K: D10K: Other PT Losses	7.20	3.47	3.50	6.67	6.65	4.62	12.80
20	0	D10K: D10K: Other PT Losses	7.20	3.47	3.50	6.67	6.65	4.62	12.80
20	1	D10K: D10K: Other PT Losses	7.20	1.86	1.89	6.44	6.41	3.50	15.21
20	2	D10K: D10K: Other PT Losses	7.20	0.26	0.29	6.21	6.17	2.38	17.62
21	0	D10K: D10K: Other PT Losses	7.20	0.26	0.29	6.21	6.17	2.38	17.62
21	1	D10K: D10K: Other PT Losses	7.20	-0.03	0.01	6.16	6.13	2.18	18.05
21	2	D10K: D10K: Other PT Losses	7.20	-0.31	-0.28	6.12	6.09	1.99	18.47
22	0	D10K: D10K: Other PT Losses	5.39	-3.55	-3.52	4.10	4.07	-0.82	18.82
22	1	D10K: D10K: Other PT Losses	5.39	-1.41	-1.38	4.42	4.38	0.67	15.60
22	2	D10K: D10K: Other PT Losses	5.39	0.73	0.76	4.73	4.70	2.16	12.38
23	0	D10K: D10K: Other PT Losses	3.95	-3.08	-3.05	2.94	2.91	-0.93	14.49
23	1	D10K: D10K: Other PT Losses	3.95	-2.45	-2.41	3.03	3.00	-0.49	13.53
23	2	D10K: D10K: Other PT Losses	3.95	-1.81	-1.78	3.12	3.09	-0.05	12.58
24	0	D10K: D10K: Other PT Losses	3.95	-1.81	-1.78	3.12	3.09	-0.05	12.58
24	1	D10K: D10K: Other PT Losses	3.95	2.45	2.48	3.75	3.71	2.92	6.17
24	2	D10K: D10K: Other PT Losses	3.95	6.71	6.74	4.37	4.34	5.88	-0.23
25	0	D10K: D10K: Other PT Losses	3.95	6.71	6.74	4.37	4.34	5.88	-0.23
25	1	D10K: D10K: Other PT Losses	3.95	10.97	11.01	5.00	4.96	8.85	-6.64
25	2	D10K: D10K: Other PT Losses	3.95	15.23	15.27	5.62	5.58	11.82	-13.05
26	0	D10K: D10K: Other PT Losses	3.95	15.23	15.27	5.62	5.58	11.82	-13.05
26	1	D10K: D10K: Other PT Losses	3.95	16.33	16.37	5.78	5.74	12.58	-14.69
26	2	D10K: D10K: Other PT Losses	3.95	17.42	17.46	5.94	5.90	13.34	-16.34
29	0	D10K: D10K: Other PT Losses	5.78	21.39	21.60	8.18	7.97	16.72	-17.85
29	1	D10K: D10K: Other PT Losses	5.78	19.90	20.10	7.96	7.76	15.68	-15.60
29	2	D10K: D10K: Other PT Losses	5.78	18.40	18.60	7.74	7.54	14.63	-13.34
30	0	D10K: D10K: Other PT Losses	5.78	18.40	18.60	7.74	7.54	14.63	-13.34
30	1	D10K: D10K: Other PT Losses	5.78	12.60	12.79	6.88	6.70	10.59	-4.62
30	2	D10K: D10K: Other PT Losses	5.78	6.81	6.98	6.03	5.86	6.56	4.10
31	0	D10K: D10K: Other PT Losses	5.78	6.81	6.98	6.03	5.86	6.56	4.10
31	1	D10K: D10K: Other PT Losses	5.78	1.02	1.17	5.17	5.02	2.52	12.83
31	2	D10K: D10K: Other PT Losses	5.78	-4.78	-4.65	4.31	4.18	-1.52	21.55
32	0	D10K: D10K: Other PT Losses	5.78	-4.78	-4.65	4.31	4.18	-1.52	21.55
32	1	D10K: D10K: Other PT Losses	5.78	-5.63	-5.50	4.19	4.06	-2.11	22.83
32	2	D10K: D10K: Other PT Losses	5.78	-6.48	-6.35	4.06	3.93	-2.71	24.11
33	0	D10K: D10K: Other PT Losses	7.79	-1.94	-1.81	6.44	6.31	1.06	22.31
33	1	D10K: D10K: Other PT Losses	7.79	-3.30	-3.18	6.24	6.11	0.11	24.37
33	2	D10K: D10K: Other PT Losses	7.79	-4.67	-4.54	6.04	5.91	-0.84	26.42
34	0	D10K: D10K: Other PT Losses	7.86	-0.69	-0.57	6.68	6.56	1.95	20.63
34	1	D10K: D10K: Other PT Losses	7.86	-0.52	-0.40	6.71	6.58	2.07	20.37
34	2	D10K: D10K: Other PT Losses	7.86	-0.35	-0.23	6.73	6.61	2.19	20.11

MEMBER STRESSES

DECK & CANOPY MEMBERS
D10K

(-) compression

			TU(+) + TEMP. DIFF.						
Member	Station	Result Case	(P/A) @ Centroid (kips/ft²)	Normal Stress @ Point 1 (kips/ft²)	Normal Stress @ Point 2 (kips/ft²)	Normal Stress @ Point 3 (kips/ft²)	Normal Stress @ Point 4 (kips/ft²)	Normal Stress @ Point 5 (kips/ft²)	Normal Stress @ Point 6 (kips/ft²)
35	0	D10K: D10K: Other PT Losses	7.86	-0.35	-0.23	6.73	6.61	2.19	20.11
35	1	D10K: D10K: Other PT Losses	7.86	0.18	0.29	6.80	6.69	2.55	19.32
35	2	D10K: D10K: Other PT Losses	7.86	0.71	0.82	6.88	6.77	2.92	18.53
36	0	D10K: D10K: Other PT Losses	7.86	0.71	0.82	6.88	6.77	2.92	18.53
36	1	D10K: D10K: Other PT Losses	7.86	1.24	1.34	6.95	6.85	3.29	17.74
36	2	D10K: D10K: Other PT Losses	7.86	1.77	1.87	7.03	6.93	3.65	16.95
37	0	D10K: D10K: Other PT Losses	7.86	1.77	1.87	7.03	6.93	3.65	16.95
37	1	D10K: D10K: Other PT Losses	7.86	2.04	2.14	7.07	6.97	3.84	16.54
37	2	D10K: D10K: Other PT Losses	7.86	2.32	2.41	7.10	7.01	4.03	16.13
38	0	D10K: D10K: Other PT Losses	9.19	4.39	4.48	8.54	8.45	5.88	16.34
38	1	D10K: D10K: Other PT Losses	9.19	3.72	3.82	8.44	8.35	5.42	17.34
38	2	D10K: D10K: Other PT Losses	9.19	3.06	3.15	8.35	8.25	4.95	18.34
39	0	D10K: D10K: Other PT Losses	9.00	4.13	4.22	8.34	8.25	5.64	16.25
39	1	D10K: D10K: Other PT Losses	9.00	3.89	3.98	8.31	8.21	5.47	16.62
39	2	D10K: D10K: Other PT Losses	9.00	3.64	3.73	8.27	8.18	5.30	16.99
40	0	D10K: D10K: Other PT Losses	9.00	3.64	3.73	8.27	8.18	5.30	16.99
40	1	D10K: D10K: Other PT Losses	9.00	2.92	3.00	8.16	8.08	4.80	18.08
40	2	D10K: D10K: Other PT Losses	9.00	2.19	2.27	8.05	7.97	4.29	19.17
41	0	D10K: D10K: Other PT Losses	9.00	2.19	2.27	8.05	7.97	4.29	19.17
41	1	D10K: D10K: Other PT Losses	9.00	1.47	1.54	7.94	7.87	3.78	20.27
41	2	D10K: D10K: Other PT Losses	9.00	0.74	0.81	7.83	7.76	3.28	21.37
42	0	D10K: D10K: Other PT Losses	9.00	0.74	0.81	7.83	7.76	3.28	21.37
42	1	D10K: D10K: Other PT Losses	9.00	0.29	0.36	7.77	7.70	2.96	22.04
42	2	D10K: D10K: Other PT Losses	9.00	-0.16	-0.10	7.70	7.63	2.65	22.72
43	0	D10K: D10K: Other PT Losses	8.68	-0.88	-0.81	7.31	7.25	2.05	22.99
43	1	D10K: D10K: Other PT Losses	8.68	-0.77	-0.71	7.33	7.27	2.12	22.83
43	2	D10K: D10K: Other PT Losses	8.68	-0.66	-0.60	7.35	7.28	2.20	22.66
44	0	D10K: D10K: Other PT Losses	8.69	-2.54	-2.48	7.09	7.02	0.90	25.53
44	1	D10K: D10K: Other PT Losses	8.69	-2.78	-2.72	7.05	6.99	0.73	25.89
44	2	D10K: D10K: Other PT Losses	8.69	-3.01	-2.95	7.02	6.96	0.57	26.25
45	0	D10K: D10K: Other PT Losses	8.69	-3.01	-2.95	7.02	6.96	0.57	26.25
45	1	D10K: D10K: Other PT Losses	8.69	-3.67	-3.62	6.92	6.86	0.11	27.24
45	2	D10K: D10K: Other PT Losses	8.69	-4.33	-4.28	6.82	6.77	-0.36	28.24
46	0	D10K: D10K: Other PT Losses	8.69	-4.33	-4.28	6.82	6.77	-0.36	28.24
46	1	D10K: D10K: Other PT Losses	8.69	-4.99	-4.95	6.72	6.67	-0.82	29.23
46	2	D10K: D10K: Other PT Losses	8.69	-5.65	-5.61	6.62	6.58	-1.28	30.23
47	0	D10K: D10K: Other PT Losses	8.69	-5.65	-5.61	6.62	6.58	-1.28	30.23
47	1	D10K: D10K: Other PT Losses	8.69	-6.12	-6.08	6.55	6.51	-1.60	30.94
47	2	D10K: D10K: Other PT Losses	8.69	-6.59	-6.56	6.48	6.45	-1.93	31.65
48	0	D10K: D10K: Other PT Losses	6.04	-11.92	-11.89	3.43	3.40	-6.45	33.00
48	1	D10K: D10K: Other PT Losses	6.04	-10.83	-10.80	3.59	3.55	-5.70	31.37
48	2	D10K: D10K: Other PT Losses	6.04	-9.75	-9.72	3.75	3.71	-4.94	29.74
49	0	D10K: D10K: Other PT Losses	6.51	-15.92	-15.88	3.25	3.22	-9.09	40.20
49	1	D10K: D10K: Other PT Losses	6.51	-14.88	-14.86	3.40	3.37	-8.37	38.65
49	2	D10K: D10K: Other PT Losses	6.51	-13.85	-13.83	3.55	3.52	-7.65	37.10
50	0	D10K: D10K: Other PT Losses	6.51	-13.85	-13.83	3.55	3.52	-7.65	37.10
50	1	D10K: D10K: Other PT Losses	6.51	-11.13	-11.10	3.95	3.92	-5.76	33.01
50	2	D10K: D10K: Other PT Losses	6.51	-8.40	-8.38	4.34	4.32	-3.86	28.92

MEMBER STRESSES

DECK & CANOPY MEMBERS
D10K

(-) compression

			TU(+) + TEMP. DIFF.						
Member	Station	Result Case	(P/A) @ Centroid (kips/ft²)	Normal Stress @ Point 1 (kips/ft²)	Normal Stress @ Point 2 (kips/ft²)	Normal Stress @ Point 3 (kips/ft²)	Normal Stress @ Point 4 (kips/ft²)	Normal Stress @ Point 5 (kips/ft²)	Normal Stress @ Point 6 (kips/ft²)
51	0	D10K: D10K: Other PT Losses	6.51	-8.40	-8.38	4.34	4.32	-3.86	28.92
51	1	D10K: D10K: Other PT Losses	6.51	-5.68	-5.66	4.74	4.72	-1.97	24.82
51	2	D10K: D10K: Other PT Losses	6.51	-2.95	-2.94	5.13	5.12	-0.07	20.73
52	0	D10K: D10K: Other PT Losses	6.51	-2.95	-2.94	5.13	5.12	-0.07	20.73
52	1	D10K: D10K: Other PT Losses	6.51	-0.79	-0.78	5.45	5.44	1.43	17.48
52	2	D10K: D10K: Other PT Losses	6.51	1.38	1.38	5.76	5.76	2.94	14.23
60	0	D10K: D10K: Other PT Losses	0.00	0.00	0.00	0.00	0.00	0.00	0.00
60	1	D10K: D10K: Other PT Losses	0.00	0.00	0.00	0.00	0.00	0.00	0.00
60	2	D10K: D10K: Other PT Losses	0.00	0.00	0.00	0.00	0.00	0.00	0.00
101	0	D10K: D10K: Other PT Losses	0.00	0.00	0.00	0.00	0.00	0.00	0.00
101	1	D10K: D10K: Other PT Losses	0.00	0.00	0.00	0.00	0.00	0.00	0.00
101	2	D10K: D10K: Other PT Losses	0.00	0.00	0.00	0.00	0.00	0.00	0.00
102	0	D10K: D10K: Other PT Losses	0.00	0.00	0.00	0.00	0.00	0.00	0.00
102	1	D10K: D10K: Other PT Losses	0.00	0.00	0.00	0.00	0.00	0.00	0.00
102	2	D10K: D10K: Other PT Losses	0.00	0.00	0.00	0.00	0.00	0.00	0.00
103	0	D10K: D10K: Other PT Losses	0.00	0.00	0.00	0.00	0.00	0.00	0.00
103	1	D10K: D10K: Other PT Losses	0.00	0.00	0.00	0.00	0.00	0.00	0.00
103	2	D10K: D10K: Other PT Losses	0.00	0.00	0.00	0.00	0.00	0.00	0.00
104	0	D10K: D10K: Other PT Losses	0.00	0.00	0.00	0.00	0.00	0.00	0.00
104	1	D10K: D10K: Other PT Losses	0.00	0.00	0.00	0.00	0.00	0.00	0.00
104	2	D10K: D10K: Other PT Losses	0.00	0.00	0.00	0.00	0.00	0.00	0.00
106	0	D10K: D10K: Other PT Losses	-7.55	7.93	7.93	-24.55	-24.55	4.48	-10.74
106	1	D10K: D10K: Other PT Losses	-7.55	6.79	6.79	-23.29	-23.29	3.59	-10.50
106	2	D10K: D10K: Other PT Losses	-7.55	5.64	5.64	-22.03	-22.03	2.70	-10.27
107	0	D10K: D10K: Other PT Losses	-7.55	5.64	5.64	-22.03	-22.03	2.70	-10.27
107	1	D10K: D10K: Other PT Losses	-7.55	-1.03	-1.03	-14.71	-14.72	-2.48	-8.89
107	2	D10K: D10K: Other PT Losses	-7.55	-7.70	-7.69	-7.39	-7.40	-7.66	-7.52
108	0	D10K: D10K: Other PT Losses	-7.55	-7.70	-7.69	-7.39	-7.40	-7.66	-7.52
108	1	D10K: D10K: Other PT Losses	-7.55	-14.06	-14.06	-0.40	-0.41	-12.61	-6.21
108	2	D10K: D10K: Other PT Losses	-7.55	-20.43	-20.42	6.58	6.58	-17.56	-4.90
109	0	D10K: D10K: Other PT Losses	-7.55	-20.43	-20.42	6.59	6.58	-17.56	-4.90
109	1	D10K: D10K: Other PT Losses	-7.55	-22.71	-22.71	9.09	9.09	-19.33	-4.43
109	2	D10K: D10K: Other PT Losses	-7.55	-25.00	-24.99	11.60	11.60	-21.11	-3.96
111	0	D10K: D10K: Other PT Losses	-7.70	-15.48	-15.48	0.85	0.85	-13.75	-6.09
111	1	D10K: D10K: Other PT Losses	-7.70	-15.17	-15.17	0.51	0.51	-13.51	-6.16
111	2	D10K: D10K: Other PT Losses	-7.70	-14.87	-14.86	0.18	0.17	-13.27	-6.22
112	0	D10K: D10K: Other PT Losses	-7.70	-14.87	-14.86	0.18	0.17	-13.27	-6.22
112	1	D10K: D10K: Other PT Losses	-7.70	-13.25	-13.24	-1.60	-1.61	-12.01	-6.55
112	2	D10K: D10K: Other PT Losses	-7.70	-11.63	-11.62	-3.38	-3.39	-10.75	-6.89
113	0	D10K: D10K: Other PT Losses	-7.70	-11.63	-11.62	-3.38	-3.39	-10.75	-6.89
113	1	D10K: D10K: Other PT Losses	-7.70	-9.98	-9.97	-5.19	-5.20	-9.47	-7.23
113	2	D10K: D10K: Other PT Losses	-7.70	-8.33	-8.32	-7.00	-7.01	-8.19	-7.57
114	0	D10K: D10K: Other PT Losses	-7.70	-8.33	-8.32	-7.00	-7.01	-8.19	-7.57
114	1	D10K: D10K: Other PT Losses	-7.70	-7.90	-7.89	-7.47	-7.48	-7.85	-7.65
114	2	D10K: D10K: Other PT Losses	-7.70	-7.47	-7.46	-7.94	-7.95	-7.52	-7.74
116	0	D10K: D10K: Other PT Losses	-2.29	-10.77	-10.76	7.01	7.00	-8.87	-0.55
116	1	D10K: D10K: Other PT Losses	-2.29	-10.31	-10.30	6.51	6.50	-8.52	-0.64
116	2	D10K: D10K: Other PT Losses	-2.29	-9.86	-9.85	6.01	6.00	-8.17	-0.74

MEMBER STRESSES

DECK & CANOPY MEMBERS
D10K

(-) compression

			TU(+) + TEMP. DIFF.						
Member	Station	Result Case	(P/A) @ Centroid (kips/ft²)	Normal Stress @ Point 1 (kips/ft²)	Normal Stress @ Point 2 (kips/ft²)	Normal Stress @ Point 3 (kips/ft²)	Normal Stress @ Point 4 (kips/ft²)	Normal Stress @ Point 5 (kips/ft²)	Normal Stress @ Point 6 (kips/ft²)
117	0	D10K: D10K: Other PT Losses	-2.29	-9.86	-9.85	6.01	6.00	-8.17	-0.74
117	1	D10K: D10K: Other PT Losses	-2.29	-6.64	-6.63	2.48	2.47	-5.67	-1.40
117	2	D10K: D10K: Other PT Losses	-2.29	-3.43	-3.41	-1.05	-1.06	-3.17	-2.06
118	0	D10K: D10K: Other PT Losses	-2.29	-3.43	-3.41	-1.05	-1.06	-3.17	-2.06
118	1	D10K: D10K: Other PT Losses	-2.29	-0.27	-0.25	-4.52	-4.53	-0.71	-2.71
118	2	D10K: D10K: Other PT Losses	-2.29	2.89	2.91	-7.99	-8.00	1.74	-3.36
119	0	D10K: D10K: Other PT Losses	-2.29	2.89	2.91	-7.99	-8.00	1.74	-3.36
119	1	D10K: D10K: Other PT Losses	-2.29	3.55	3.57	-8.71	-8.73	2.25	-3.50
119	2	D10K: D10K: Other PT Losses	-2.29	4.21	4.23	-9.44	-9.45	2.77	-3.63
121	0	D10K: D10K: Other PT Losses	9.95	-1.07	-1.05	22.04	22.03	1.39	12.22
121	1	D10K: D10K: Other PT Losses	9.95	-0.42	-0.40	21.33	21.32	1.90	12.08
121	2	D10K: D10K: Other PT Losses	9.95	0.23	0.25	20.62	20.60	2.41	11.95
122	0	D10K: D10K: Other PT Losses	9.95	0.23	0.25	20.62	20.60	2.41	11.95
122	1	D10K: D10K: Other PT Losses	9.95	4.63	4.64	15.80	15.78	5.82	11.04
122	2	D10K: D10K: Other PT Losses	9.95	9.02	9.04	10.97	10.96	9.23	10.14
123	0	D10K: D10K: Other PT Losses	9.95	9.02	9.04	10.97	10.96	9.23	10.14
123	1	D10K: D10K: Other PT Losses	9.95	13.41	13.43	6.15	6.13	12.65	9.24
123	2	D10K: D10K: Other PT Losses	9.95	17.80	17.82	1.33	1.31	16.06	8.33
124	0	D10K: D10K: Other PT Losses	9.95	17.80	17.82	1.33	1.31	16.06	8.33
124	1	D10K: D10K: Other PT Losses	9.95	18.37	18.39	0.71	0.69	16.50	8.22
124	2	D10K: D10K: Other PT Losses	9.95	18.94	18.96	0.08	0.06	16.94	8.10
126	0	D10K: D10K: Other PT Losses	34.42	9.92	9.95	61.32	61.30	15.39	39.46
126	1	D10K: D10K: Other PT Losses	34.42	12.90	12.92	58.05	58.03	17.70	38.85
126	2	D10K: D10K: Other PT Losses	34.42	15.87	15.89	54.79	54.77	20.01	38.24
127	0	D10K: D10K: Other PT Losses	34.42	15.87	15.89	54.79	54.77	20.01	38.24
127	1	D10K: D10K: Other PT Losses	34.42	26.35	26.38	43.28	43.26	28.16	36.08
127	2	D10K: D10K: Other PT Losses	34.42	36.84	36.86	31.77	31.74	36.31	33.92
128	0	D10K: D10K: Other PT Losses	34.42	36.84	36.86	31.77	31.74	36.31	33.92
128	1	D10K: D10K: Other PT Losses	34.42	47.56	47.59	19.99	19.97	44.65	31.71
133	0	D10K: D10K: Other PT Losses	32.94	60.46	60.50	2.72	2.68	54.34	27.27
133	1	D10K: D10K: Other PT Losses	32.94	48.94	48.99	15.37	15.33	45.39	29.64
133	2	D10K: D10K: Other PT Losses	32.94	37.42	37.47	28.01	27.97	36.44	32.01
134	0	D10K: D10K: Other PT Losses	32.94	37.42	37.47	28.01	27.97	36.44	32.01
134	1	D10K: D10K: Other PT Losses	32.94	25.90	25.94	40.66	40.62	27.49	34.38
134	2	D10K: D10K: Other PT Losses	32.94	14.39	14.42	53.31	53.27	18.54	36.76
135	0	D10K: D10K: Other PT Losses	32.94	14.39	14.42	53.31	53.27	18.54	36.76
135	1	D10K: D10K: Other PT Losses	32.94	11.44	11.48	56.54	56.51	16.24	37.36
135	2	D10K: D10K: Other PT Losses	32.94	8.49	8.53	59.78	59.75	13.95	37.97
137	0	D10K: D10K: Other PT Losses	3.92	22.65	22.69	-16.64	-16.67	18.49	0.07
137	1	D10K: D10K: Other PT Losses	3.92	19.98	20.02	-13.71	-13.74	16.42	0.61
137	2	D10K: D10K: Other PT Losses	3.92	17.31	17.35	-10.78	-10.81	14.34	1.16
138	0	D10K: D10K: Other PT Losses	3.92	17.31	17.35	-10.78	-10.81	14.34	1.16
138	1	D10K: D10K: Other PT Losses	3.92	9.30	9.33	-1.98	-2.01	8.11	2.81
138	2	D10K: D10K: Other PT Losses	3.92	1.29	1.32	6.81	6.79	1.89	4.46
139	0	D10K: D10K: Other PT Losses	3.92	1.29	1.32	6.82	6.79	1.89	4.46
139	1	D10K: D10K: Other PT Losses	3.92	-7.24	-7.20	16.17	16.14	-4.74	6.22
139	2	D10K: D10K: Other PT Losses	3.92	-15.76	-15.73	25.53	25.50	-11.36	7.97

MEMBER STRESSES

DECK & CANOPY MEMBERS
D10K

(-) compression

			TU(+) + TEMP. DIFF.						
Member	Station	Result Case	(P/A) @ Centroid (kips/ft²)	Normal Stress @ Point 1 (kips/ft²)	Normal Stress @ Point 2 (kips/ft²)	Normal Stress @ Point 3 (kips/ft²)	Normal Stress @ Point 4 (kips/ft²)	Normal Stress @ Point 5 (kips/ft²)	Normal Stress @ Point 6 (kips/ft²)
140	0	D10K: D10K: Other PT Losses	3.92	-15.76	-15.73	25.53	25.50	-11.36	7.97
140	1	D10K: D10K: Other PT Losses	3.92	-18.07	-18.04	28.06	28.03	-13.15	8.45
140	2	D10K: D10K: Other PT Losses	3.92	-20.37	-20.34	30.59	30.57	-14.95	8.92
142	0	D10K: D10K: Other PT Losses	-3.77	5.07	5.10	-13.48	-13.51	3.11	-5.60
142	1	D10K: D10K: Other PT Losses	-3.77	2.62	2.65	-10.79	-10.82	1.20	-5.09
142	2	D10K: D10K: Other PT Losses	-3.77	0.17	0.20	-8.10	-8.13	-0.70	-4.59
143	0	D10K: D10K: Other PT Losses	-3.77	0.17	0.19	-8.10	-8.13	-0.70	-4.59
143	1	D10K: D10K: Other PT Losses	-3.77	-4.77	-4.75	-2.68	-2.70	-4.54	-3.57
143	2	D10K: D10K: Other PT Losses	-3.77	-9.71	-9.69	2.75	2.72	-8.38	-2.55
144	0	D10K: D10K: Other PT Losses	-3.77	-9.71	-9.69	2.75	2.72	-8.38	-2.55
144	1	D10K: D10K: Other PT Losses	-3.77	-15.12	-15.09	8.68	8.66	-12.58	-1.44
144	2	D10K: D10K: Other PT Losses	-3.77	-20.52	-20.50	14.62	14.60	-16.78	-0.33
145	0	D10K: D10K: Other PT Losses	-3.77	-20.52	-20.50	14.61	14.59	-16.78	-0.33
145	1	D10K: D10K: Other PT Losses	-3.77	-21.94	-21.92	16.17	16.15	-17.89	-0.04
145	2	D10K: D10K: Other PT Losses	-3.77	-23.37	-23.34	17.73	17.71	-18.99	0.26
147	0	D10K: D10K: Other PT Losses	-7.18	-15.17	-15.14	1.59	1.57	-13.38	-5.54
147	1	D10K: D10K: Other PT Losses	-7.18	-15.66	-15.63	2.13	2.11	-13.76	-5.44
147	2	D10K: D10K: Other PT Losses	-7.18	-16.14	-16.12	2.66	2.64	-14.14	-5.34
148	0	D10K: D10K: Other PT Losses	-7.18	-16.14	-16.12	2.66	2.64	-14.14	-5.34
148	1	D10K: D10K: Other PT Losses	-7.18	-16.96	-16.94	3.56	3.54	-14.78	-5.17
148	2	D10K: D10K: Other PT Losses	-7.18	-17.78	-17.76	4.46	4.44	-15.41	-5.00
149	0	D10K: D10K: Other PT Losses	-7.18	-17.78	-17.76	4.46	4.44	-15.41	-5.00
149	1	D10K: D10K: Other PT Losses	-7.18	-18.75	-18.73	5.52	5.51	-16.16	-4.80
149	2	D10K: D10K: Other PT Losses	-7.18	-19.71	-19.70	6.58	6.57	-16.91	-4.60
150	0	D10K: D10K: Other PT Losses	-7.18	-19.71	-19.70	6.58	6.57	-16.91	-4.60
150	1	D10K: D10K: Other PT Losses	-7.18	-19.92	-19.91	6.81	6.80	-17.08	-4.56
150	2	D10K: D10K: Other PT Losses	-7.18	-20.13	-20.12	7.04	7.03	-17.24	-4.51
152	0	D10K: D10K: Other PT Losses	-6.92	-41.16	-41.14	30.67	30.66	-33.52	0.13
152	1	D10K: D10K: Other PT Losses	-6.92	-36.06	-36.05	25.08	25.07	-29.56	-0.92
152	2	D10K: D10K: Other PT Losses	-6.92	-30.97	-30.95	19.48	19.47	-25.60	-1.97
153	0	D10K: D10K: Other PT Losses	-6.92	-30.97	-30.95	19.48	19.47	-25.60	-1.97
153	1	D10K: D10K: Other PT Losses	-6.92	-22.63	-22.62	10.34	10.33	-19.13	-3.68
153	2	D10K: D10K: Other PT Losses	-6.92	-14.30	-14.29	1.19	1.18	-12.65	-5.40
154	0	D10K: D10K: Other PT Losses	-6.92	-14.30	-14.29	1.19	1.18	-12.65	-5.40
154	1	D10K: D10K: Other PT Losses	-6.92	-5.26	-5.25	-8.74	-8.75	-5.63	-7.26
154	2	D10K: D10K: Other PT Losses	-6.92	3.78	3.79	-18.66	-18.67	1.40	-9.12
155	0	D10K: D10K: Other PT Losses	-6.92	3.78	3.79	-18.66	-18.67	1.40	-9.12
155	1	D10K: D10K: Other PT Losses	-6.92	6.61	6.62	-21.77	-21.78	3.60	-9.70
155	2	D10K: D10K: Other PT Losses	-6.92	9.44	9.45	-24.88	-24.88	5.80	-10.28
157	0	D10K: D10K: Other PT Losses	-1.91	-36.34	-36.33	35.89	35.88	-28.66	5.18
157	1	D10K: D10K: Other PT Losses	-1.91	-31.15	-31.14	30.19	30.19	-24.63	4.11
157	2	D10K: D10K: Other PT Losses	-1.91	-25.97	-25.96	24.50	24.49	-20.60	3.04
158	0	D10K: D10K: Other PT Losses	-1.91	-25.97	-25.96	24.50	24.49	-20.60	3.04
158	1	D10K: D10K: Other PT Losses	-1.91	-9.35	-9.35	6.26	6.25	-7.69	-0.38
158	2	D10K: D10K: Other PT Losses	-1.91	7.26	7.27	-11.98	-11.99	5.22	-3.80
159	0	D10K: D10K: Other PT Losses	-1.91	7.26	7.27	-11.98	-11.99	5.22	-3.80
159	1	D10K: D10K: Other PT Losses	-1.91	24.11	24.11	-30.48	-30.48	18.31	-7.27
159	2	D10K: D10K: Other PT Losses	-1.91	40.95	40.95	-48.97	-48.97	31.40	-10.73

MEMBER STRESSES

DECK & CANOPY MEMBERS
D10K

CASE A: LL ON FULL LENGTH OF BRIDGE

(-) compression

σ_{t_allow} = 3sqrt(f'c) = 39.8 ksf
σ_{c_allow} = 0.45(f'c) = -550.8 ksf

			SERVICE III-CASE A						
Member	Station	Result Case	(P/A) @ Centroid (kips/ft²)	Normal Stress @ Point 1 (kips/ft²)	Normal Stress @ Point 2 (kips/ft²)	Normal Stress @ Point 3 (kips/ft²)	Normal Stress @ Point 4 (kips/ft²)	Normal Stress @ Point 5 (kips/ft²)	Normal Stress @ Point 6 (kips/ft²)
1	0	D10K: D10K: Other PT Losses	-164	21	21	-137	-137	-35	-442
1	1	D10K: D10K: Other PT Losses	-162	14	14	-136	-136	-39	-427
1	2	D10K: D10K: Other PT Losses	-162	8	8	-137	-137	-44	-416
2	0	D10K: D10K: Other PT Losses	-161	4	4	-137	-137	-46	-393
2	1	D10K: D10K: Other PT Losses	-160	-58	-58	-146	-146	-89	-305
2	2	D10K: D10K: Other PT Losses	-161	-121	-121	-156	-156	-133	-218
3	0	D10K: D10K: Other PT Losses	-114	-57	-57	-105	-105	-74	-198
3	1	D10K: D10K: Other PT Losses	-120	-145	-145	-124	-124	-137	-83
3	2	D10K: D10K: Other PT Losses	-120	-166	-166	-127	-127	-152	-51
4	0	D10K: D10K: Other PT Losses	-120	-166	-166	-127	-127	-152	-51
4	1	D10K: D10K: Other PT Losses	-120	-192	-192	-131	-131	-170	-11
4	2	D10K: D10K: Other PT Losses	-120	-193	-194	-131	-131	-171	-10
5	0	D10K: D10K: Other PT Losses	-120	-193	-194	-131	-131	-171	-10
5	1	D10K: D10K: Other PT Losses	-120	-169	-169	-127	-127	-154	-47
5	2	D10K: D10K: Other PT Losses	-120	-119	-119	-120	-120	-120	-122
6	0	D10K: D10K: Other PT Losses	-120	-119	-119	-120	-120	-120	-122
6	1	D10K: D10K: Other PT Losses	-120	-111	-111	-119	-119	-114	-135
6	2	D10K: D10K: Other PT Losses	-120	-101	-101	-117	-117	-107	-148
7	0	D10K: D10K: Other PT Losses	-124	-87	-87	-119	-119	-98	-180
7	1	D10K: D10K: Other PT Losses	-124	-100	-100	-121	-121	-107	-161
7	2	D10K: D10K: Other PT Losses	-125	-112	-112	-123	-123	-116	-143
8	0	D10K: D10K: Other PT Losses	-110	-94	-94	-108	-108	-99	-134
8	1	D10K: D10K: Other PT Losses	-110	-120	-121	-112	-112	-117	-95
8	2	D10K: D10K: Other PT Losses	-110	-142	-142	-115	-115	-133	-63
9	0	D10K: D10K: Other PT Losses	-110	-142	-142	-115	-115	-133	-63
9	1	D10K: D10K: Other PT Losses	-111	-176	-176	-120	-120	-156	-12
9	2	D10K: D10K: Other PT Losses	-111	-182	-182	-121	-121	-160	-4
10	0	D10K: D10K: Other PT Losses	-111	-182	-182	-121	-121	-160	-4
10	1	D10K: D10K: Other PT Losses	-111	-158	-158	-118	-118	-144	-39
10	2	D10K: D10K: Other PT Losses	-111	-106	-106	-110	-110	-108	-118
11	0	D10K: D10K: Other PT Losses	-111	-106	-106	-110	-110	-108	-118
11	1	D10K: D10K: Other PT Losses	-111	-97	-97	-109	-109	-101	-132
11	2	D10K: D10K: Other PT Losses	-111	-87	-87	-108	-107	-94	-147
12	0	D10K: D10K: Other PT Losses	-111	-93	-93	-109	-109	-98	-139
12	1	D10K: D10K: Other PT Losses	-111	-92	-93	-109	-108	-98	-139
12	2	D10K: D10K: Other PT Losses	-111	-92	-92	-108	-108	-98	-140
13	0	D10K: D10K: Other PT Losses	-117	-95	-95	-114	-114	-102	-151
13	1	D10K: D10K: Other PT Losses	-117	-118	-118	-117	-117	-118	-117
13	2	D10K: D10K: Other PT Losses	-117	-137	-137	-120	-120	-131	-88
14	0	D10K: D10K: Other PT Losses	-117	-137	-137	-120	-120	-131	-88
14	1	D10K: D10K: Other PT Losses	-118	-175	-175	-126	-126	-158	-31
14	2	D10K: D10K: Other PT Losses	-118	-179	-179	-127	-127	-160	-26
15	0	D10K: D10K: Other PT Losses	-118	-179	-179	-127	-127	-160	-26
15	1	D10K: D10K: Other PT Losses	-118	-148	-148	-122	-122	-139	-73
15	2	D10K: D10K: Other PT Losses	-118	-82	-82	-113	-113	-93	-172
16	0	D10K: D10K: Other PT Losses	-118	-82	-82	-113	-113	-93	-172
16	1	D10K: D10K: Other PT Losses	-118	-72	-72	-112	-111	-86	-187
16	2	D10K: D10K: Other PT Losses	-118	-62	-62	-110	-110	-79	-203

MEMBER STRESSES

DECK & CANOPY MEMBERS
D10K

CASE A: LL ON FULL LENGTH OF BRIDGE

(-) compression

σ_{t_allow} = 3sqrt(f'c) = 39.8 ksf
σ_{c_allow} = 0.45(f'c) = -550.8 ksf

			SERVICE III-CASE A						
Member	Station	Result Case	(P/A) @ Centroid (kips/ft²)	Normal Stress @ Point 1 (kips/ft²)	Normal Stress @ Point 2 (kips/ft²)	Normal Stress @ Point 3 (kips/ft²)	Normal Stress @ Point 4 (kips/ft²)	Normal Stress @ Point 5 (kips/ft²)	Normal Stress @ Point 6 (kips/ft²)
17	0	D10K: D10K: Other PT Losses	-121	-83	-83	-115	-115	-95	-178
17	1	D10K: D10K: Other PT Losses	-121	-72	-72	-114	-114	-87	-195
17	2	D10K: D10K: Other PT Losses	-120	-60	-60	-112	-112	-78	-211
18	0	D10K: D10K: Other PT Losses	-139	-76	-76	-130	-130	-95	-234
18	1	D10K: D10K: Other PT Losses	-139	-99	-99	-133	-133	-111	-199
18	2	D10K: D10K: Other PT Losses	-139	-119	-120	-136	-136	-125	-168
19	0	D10K: D10K: Other PT Losses	-139	-119	-120	-136	-136	-125	-168
19	1	D10K: D10K: Other PT Losses	-139	-183	-183	-146	-146	-170	-73
19	2	D10K: D10K: Other PT Losses	-139	-206	-206	-149	-149	-186	-40
20	0	D10K: D10K: Other PT Losses	-139	-206	-206	-149	-149	-186	-40
20	1	D10K: D10K: Other PT Losses	-140	-188	-188	-147	-147	-173	-67
20	2	D10K: D10K: Other PT Losses	-140	-129	-129	-138	-138	-133	-156
21	0	D10K: D10K: Other PT Losses	-140	-129	-129	-138	-138	-133	-156
21	1	D10K: D10K: Other PT Losses	-140	-114	-114	-136	-136	-123	-178
21	2	D10K: D10K: Other PT Losses	-140	-97	-97	-134	-134	-111	-201
22	0	D10K: D10K: Other PT Losses	-154	-122	-122	-150	-150	-134	-190
22	1	D10K: D10K: Other PT Losses	-153	-104	-104	-147	-147	-121	-222
22	2	D10K: D10K: Other PT Losses	-153	-85	-85	-143	-143	-106	-253
23	0	D10K: D10K: Other PT Losses	-171	-105	-105	-162	-162	-127	-260
23	1	D10K: D10K: Other PT Losses	-171	-120	-120	-164	-164	-137	-239
23	2	D10K: D10K: Other PT Losses	-171	-134	-134	-166	-166	-147	-220
24	0	D10K: D10K: Other PT Losses	-171	-134	-134	-166	-166	-147	-220
24	1	D10K: D10K: Other PT Losses	-171	-198	-198	-175	-175	-190	-130
24	2	D10K: D10K: Other PT Losses	-171	-211	-211	-177	-177	-199	-110
25	0	D10K: D10K: Other PT Losses	-171	-211	-211	-177	-177	-199	-110
25	1	D10K: D10K: Other PT Losses	-171	-178	-178	-172	-172	-176	-149
25	2	D10K: D10K: Other PT Losses	-170	-97	-97	-160	-160	-120	-258
26	0	D10K: D10K: Other PT Losses	-170	-97	-97	-160	-160	-120	-258
26	1	D10K: D10K: Other PT Losses	-170	-69	-69	-156	-155	-100	-297
26	2	D10K: D10K: Other PT Losses	-169	15	15	-142	-142	-41	-419
29	0	D10K: D10K: Other PT Losses	-93	35	36	-74	-75	-4	-258
29	1	D10K: D10K: Other PT Losses	-92	-22	-21	-82	-82	-43	-173
29	2	D10K: D10K: Other PT Losses	-92	-49	-49	-86	-86	-62	-136
30	0	D10K: D10K: Other PT Losses	-92	-49	-49	-86	-86	-62	-136
30	1	D10K: D10K: Other PT Losses	-92	-126	-125	-97	-97	-115	-35
30	2	D10K: D10K: Other PT Losses	-92	-155	-154	-101	-102	-136	2
31	0	D10K: D10K: Other PT Losses	-92	-155	-154	-101	-102	-136	2
31	1	D10K: D10K: Other PT Losses	-92	-138	-137	-98	-99	-123	-24
31	2	D10K: D10K: Other PT Losses	-92	-65	-64	-89	-89	-76	-119
32	0	D10K: D10K: Other PT Losses	-92	-65	-64	-89	-89	-76	-119
32	1	D10K: D10K: Other PT Losses	-92	-50	-50	-87	-87	-65	-139
32	2	D10K: D10K: Other PT Losses	-92	-35	-34	-85	-85	-55	-161
33	0	D10K: D10K: Other PT Losses	-81	-28	-28	-74	-74	-48	-153
33	1	D10K: D10K: Other PT Losses	-81	-31	-31	-75	-75	-50	-146
33	2	D10K: D10K: Other PT Losses	-81	-34	-34	-75	-76	-52	-139
34	0	D10K: D10K: Other PT Losses	-81	-27	-27	-73	-74	-45	-157
34	1	D10K: D10K: Other PT Losses	-81	-36	-35	-74	-75	-51	-146
34	2	D10K: D10K: Other PT Losses	-81	-43	-43	-75	-76	-56	-134

MEMBER STRESSES

DECK & CANOPY MEMBERS
D10K

CASE A: LL ON FULL LENGTH OF BRIDGE

(-) compression

σ_{t_allow} = 3sqrt(f'c) = 39.8 ksf
σ_{c_allow} = 0.45(f'c) = -550.8 ksf

			SERVICE III-CASE A						
Member	Station	Result Case	(P/A) @ Centroid (kips/ft²)	Normal Stress @ Point 1 (kips/ft²)	Normal Stress @ Point 2 (kips/ft²)	Normal Stress @ Point 3 (kips/ft²)	Normal Stress @ Point 4 (kips/ft²)	Normal Stress @ Point 5 (kips/ft²)	Normal Stress @ Point 6 (kips/ft²)
35	0	D10K: D10K: Other PT Losses	-81	-43	-43	-75	-76	-56	-134
35	1	D10K: D10K: Other PT Losses	-81	-64	-64	-78	-79	-70	-105
35	2	D10K: D10K: Other PT Losses	-81	-80	-79	-80	-81	-80	-83
36	0	D10K: D10K: Other PT Losses	-81	-80	-79	-80	-81	-80	-83
36	1	D10K: D10K: Other PT Losses	-81	-89	-89	-82	-82	-87	-68
36	2	D10K: D10K: Other PT Losses	-81	-94	-94	-82	-83	-90	-61
37	0	D10K: D10K: Other PT Losses	-81	-94	-94	-82	-83	-90	-61
37	1	D10K: D10K: Other PT Losses	-81	-95	-94	-82	-83	-90	-60
37	2	D10K: D10K: Other PT Losses	-81	-94	-94	-82	-83	-90	-61
38	0	D10K: D10K: Other PT Losses	-73	-79	-79	-74	-74	-77	-64
38	1	D10K: D10K: Other PT Losses	-73	-83	-83	-74	-75	-80	-58
38	2	D10K: D10K: Other PT Losses	-73	-87	-87	-75	-75	-83	-53
39	0	D10K: D10K: Other PT Losses	-74	-73	-73	-73	-74	-73	-75
39	1	D10K: D10K: Other PT Losses	-74	-78	-78	-74	-75	-77	-67
39	2	D10K: D10K: Other PT Losses	-74	-83	-83	-75	-75	-80	-60
40	0	D10K: D10K: Other PT Losses	-74	-83	-83	-75	-75	-80	-60
40	1	D10K: D10K: Other PT Losses	-74	-94	-94	-76	-77	-88	-43
40	2	D10K: D10K: Other PT Losses	-74	-102	-101	-77	-78	-93	-32
41	0	D10K: D10K: Other PT Losses	-74	-102	-101	-77	-78	-93	-32
41	1	D10K: D10K: Other PT Losses	-74	-105	-104	-78	-78	-95	-27
41	2	D10K: D10K: Other PT Losses	-73	-104	-103	-78	-78	-94	-28
42	0	D10K: D10K: Other PT Losses	-73	-104	-103	-78	-78	-94	-28
42	1	D10K: D10K: Other PT Losses	-73	-101	-101	-77	-78	-93	-32
42	2	D10K: D10K: Other PT Losses	-74	-97	-96	-77	-77	-90	-39
43	0	D10K: D10K: Other PT Losses	-69	-89	-89	-72	-73	-84	-38
43	1	D10K: D10K: Other PT Losses	-70	-91	-90	-73	-73	-85	-36
43	2	D10K: D10K: Other PT Losses	-70	-92	-92	-73	-73	-86	-34
44	0	D10K: D10K: Other PT Losses	-69	-84	-84	-72	-72	-82	-42
44	1	D10K: D10K: Other PT Losses	-69	-89	-89	-73	-73	-86	-33
44	2	D10K: D10K: Other PT Losses	-69	-94	-94	-74	-74	-90	-25
45	0	D10K: D10K: Other PT Losses	-69	-94	-94	-74	-74	-90	-25
45	1	D10K: D10K: Other PT Losses	-69	-106	-106	-75	-76	-99	-6
45	2	D10K: D10K: Other PT Losses	-69	-114	-114	-77	-77	-104	7
46	0	D10K: D10K: Other PT Losses	-69	-114	-114	-77	-77	-104	7
46	1	D10K: D10K: Other PT Losses	-69	-118	-118	-77	-78	-107	15
46	2	D10K: D10K: Other PT Losses	-69	-119	-119	-78	-78	-108	18
47	0	D10K: D10K: Other PT Losses	-69	-119	-119	-78	-78	-108	18
47	1	D10K: D10K: Other PT Losses	-69	-118	-118	-78	-78	-107	17
47	2	D10K: D10K: Other PT Losses	-69	-115	-115	-77	-77	-105	13
48	0	D10K: D10K: Other PT Losses	-73	-115	-115	-82	-82	-105	16
48	1	D10K: D10K: Other PT Losses	-73	-115	-115	-81	-81	-105	13
48	2	D10K: D10K: Other PT Losses	-73	-114	-114	-81	-81	-104	10
49	0	D10K: D10K: Other PT Losses	-72	-114	-114	-82	-82	-104	27
49	1	D10K: D10K: Other PT Losses	-72	-113	-113	-81	-81	-104	23
49	2	D10K: D10K: Other PT Losses	-72	-112	-112	-81	-81	-103	19
50	0	D10K: D10K: Other PT Losses	-72	-112	-112	-81	-81	-103	19
50	1	D10K: D10K: Other PT Losses	-72	-106	-106	-79	-79	-99	4
50	2	D10K: D10K: Other PT Losses	-72	-97	-97	-77	-77	-93	-16

MEMBER STRESSES

DECK & CANOPY MEMBERS
D10K

CASE A: LL ON FULL LENGTH OF BRIDGE

(-) compression

σ_{t_allow} = 3sqrt(f'c) = 39.8 ksf
σ_{c_allow} = 0.45(f'c) = -550.8 ksf

			SERVICE III-CASE A						
Member	Station	Result Case	(P/A) @ Centroid (kips/ft²)	Normal Stress @ Point 1 (kips/ft²)	Normal Stress @ Point 2 (kips/ft²)	Normal Stress @ Point 3 (kips/ft²)	Normal Stress @ Point 4 (kips/ft²)	Normal Stress @ Point 5 (kips/ft²)	Normal Stress @ Point 6 (kips/ft²)
51	0	D10K: D10K: Other PT Losses	-72	-97	-97	-77	-77	-93	-16
51	1	D10K: D10K: Other PT Losses	-72	-85	-85	-75	-75	-84	-40
51	2	D10K: D10K: Other PT Losses	-72	-70	-70	-72	-72	-73	-69
52	0	D10K: D10K: Other PT Losses	-72	-70	-70	-72	-72	-73	-69
52	1	D10K: D10K: Other PT Losses	-72	-55	-55	-70	-70	-61	-95
52	2	D10K: D10K: Other PT Losses	-72	-36	-36	-66	-66	-47	-124
60	0	D10K: D10K: Other PT Losses	0	0	0	0	0	0	0
60	1	D10K: D10K: Other PT Losses	-168	6	6	-143	-143	-47	-430
60	2	D10K: D10K: Other PT Losses	-166	-40	-40	-148	-148	-79	-355
101	0	D10K: D10K: Other PT Losses	-195	-294	-294	-86	-86	-272	-175
101	1	D10K: D10K: Other PT Losses	-194	-168	-168	-222	-222	-174	-199
101	2	D10K: D10K: Other PT Losses	-198	-156	-156	-245	-245	-165	-207
102	0	D10K: D10K: Other PT Losses	-198	-156	-156	-245	-245	-165	-207
102	1	D10K: D10K: Other PT Losses	-201	-287	-287	-107	-107	-268	-183
102	2	D10K: D10K: Other PT Losses	-203	-253	-253	-147	-147	-242	-192
103	0	D10K: D10K: Other PT Losses	-203	-253	-253	-147	-147	-242	-192
103	1	D10K: D10K: Other PT Losses	-210	-254	-254	-160	-160	-244	-200
103	2	D10K: D10K: Other PT Losses	-210	-230	-230	-187	-187	-225	-205
104	0	D10K: D10K: Other PT Losses	-210	-230	-230	-187	-187	-225	-205
104	1	D10K: D10K: Other PT Losses	-209	-216	-216	-202	-203	-214	-208
104	2	D10K: D10K: Other PT Losses	-221	-207	-207	-236	-236	-210	-224
106	0	D10K: D10K: Other PT Losses	-303	-238	-238	-362	-362	-255	-314
106	1	D10K: D10K: Other PT Losses	-290	-241	-241	-332	-332	-254	-297
106	2	D10K: D10K: Other PT Losses	-290	-255	-254	-319	-319	-265	-295
107	0	D10K: D10K: Other PT Losses	-290	-255	-254	-319	-319	-265	-295
107	1	D10K: D10K: Other PT Losses	-290	-321	-320	-257	-257	-314	-284
107	2	D10K: D10K: Other PT Losses	-290	-346	-346	-229	-229	-333	-279
108	0	D10K: D10K: Other PT Losses	-290	-346	-346	-229	-229	-333	-279
108	1	D10K: D10K: Other PT Losses	-290	-341	-341	-235	-235	-330	-280
108	2	D10K: D10K: Other PT Losses	-290	-310	-310	-258	-258	-306	-286
109	0	D10K: D10K: Other PT Losses	-290	-310	-310	-258	-258	-306	-286
109	1	D10K: D10K: Other PT Losses	-290	-296	-296	-270	-270	-295	-289
109	2	D10K: D10K: Other PT Losses	-304	-289	-289	-302	-302	-292	-307
111	0	D10K: D10K: Other PT Losses	-331	-379	-379	-279	-279	-369	-322
111	1	D10K: D10K: Other PT Losses	-317	-373	-373	-256	-256	-360	-306
111	2	D10K: D10K: Other PT Losses	-317	-377	-377	-252	-252	-364	-305
112	0	D10K: D10K: Other PT Losses	-317	-377	-377	-252	-252	-364	-305
112	1	D10K: D10K: Other PT Losses	-318	-397	-397	-231	-231	-380	-301
112	2	D10K: D10K: Other PT Losses	-318	-383	-383	-247	-247	-369	-305
113	0	D10K: D10K: Other PT Losses	-318	-383	-383	-247	-247	-369	-305
113	1	D10K: D10K: Other PT Losses	-318	-338	-338	-296	-296	-334	-314
113	2	D10K: D10K: Other PT Losses	-318	-266	-266	-376	-376	-278	-329
114	0	D10K: D10K: Other PT Losses	-318	-266	-266	-376	-376	-278	-329
114	1	D10K: D10K: Other PT Losses	-318	-241	-241	-403	-403	-258	-334
114	2	D10K: D10K: Other PT Losses	-332	-226	-226	-449	-449	-250	-354
116	0	D10K: D10K: Other PT Losses	-315	-348	-348	-271	-271	-341	-308
116	1	D10K: D10K: Other PT Losses	-302	-342	-341	-251	-251	-333	-294
116	2	D10K: D10K: Other PT Losses	-302	-346	-346	-247	-247	-336	-293

MEMBER STRESSES

DECK & CANOPY MEMBERS
D10K

CASE A: LL ON FULL LENGTH OF BRIDGE

(-) compression

σ_{t_allow} = 3sqrt(f'c) = 39.8 ksf
σ_{c_allow} = 0.45(f'c) = -550.8 ksf

			SERVICE III-CASE A						
Member	Station	Result Case	(P/A) @ Centroid (kips/ft²)	Normal Stress @ Point 1 (kips/ft²)	Normal Stress @ Point 2 (kips/ft²)	Normal Stress @ Point 3 (kips/ft²)	Normal Stress @ Point 4 (kips/ft²)	Normal Stress @ Point 5 (kips/ft²)	Normal Stress @ Point 6 (kips/ft²)
117	0	D10K: D10K: Other PT Losses	-302	-346	-346	-247	-247	-336	-293
117	1	D10K: D10K: Other PT Losses	-302	-364	-364	-233	-233	-350	-290
117	2	D10K: D10K: Other PT Losses	-303	-348	-348	-253	-253	-338	-293
118	0	D10K: D10K: Other PT Losses	-303	-348	-348	-253	-253	-338	-293
118	1	D10K: D10K: Other PT Losses	-303	-299	-299	-307	-307	-300	-304
118	2	D10K: D10K: Other PT Losses	-303	-219	-219	-393	-393	-239	-320
119	0	D10K: D10K: Other PT Losses	-303	-219	-219	-393	-393	-239	-320
119	1	D10K: D10K: Other PT Losses	-303	-199	-199	-414	-414	-223	-323
119	2	D10K: D10K: Other PT Losses	-316	-188	-188	-452	-452	-218	-342
121	0	D10K: D10K: Other PT Losses	-239	-258	-258	-212	-212	-257	-234
121	1	D10K: D10K: Other PT Losses	-227	-257	-257	-191	-191	-253	-221
121	2	D10K: D10K: Other PT Losses	-228	-264	-264	-184	-184	-259	-219
122	0	D10K: D10K: Other PT Losses	-228	-264	-264	-184	-184	-259	-219
122	1	D10K: D10K: Other PT Losses	-228	-285	-285	-164	-164	-273	-216
122	2	D10K: D10K: Other PT Losses	-228	-268	-268	-184	-184	-259	-219
123	0	D10K: D10K: Other PT Losses	-228	-268	-268	-184	-184	-259	-219
123	1	D10K: D10K: Other PT Losses	-228	-217	-217	-239	-239	-220	-230
123	2	D10K: D10K: Other PT Losses	-228	-134	-134	-329	-329	-155	-247
124	0	D10K: D10K: Other PT Losses	-228	-134	-134	-329	-329	-155	-247
124	1	D10K: D10K: Other PT Losses	-227	-121	-121	-341	-341	-145	-249
124	2	D10K: D10K: Other PT Losses	-237	-117	-117	-365	-365	-144	-262
126	0	D10K: D10K: Other PT Losses	-103	-172	-171	-27	-27	-156	-88
126	1	D10K: D10K: Other PT Losses	-96	-169	-169	-15	-15	-153	-80
126	2	D10K: D10K: Other PT Losses	-96	-172	-171	-12	-12	-155	-80
127	0	D10K: D10K: Other PT Losses	-96	-172	-171	-12	-12	-155	-80
127	1	D10K: D10K: Other PT Losses	-96	-159	-159	-26	-26	-145	-83
127	2	D10K: D10K: Other PT Losses	-96	-120	-120	-69	-69	-115	-91
128	0	D10K: D10K: Other PT Losses	-96	-120	-120	-69	-69	-115	-91
128	1	D10K: D10K: Other PT Losses	-95	-55	-54	-140	-141	-64	-104
133	0	D10K: D10K: Other PT Losses	-59	37	38	-163	-163	16	-79
133	1	D10K: D10K: Other PT Losses	-59	-34	-33	-86	-86	-39	-64
133	2	D10K: D10K: Other PT Losses	-58	-79	-79	-36	-36	-74	-54
134	0	D10K: D10K: Other PT Losses	-58	-79	-79	-36	-36	-74	-54
134	1	D10K: D10K: Other PT Losses	-58	-98	-98	-15	-15	-89	-50
134	2	D10K: D10K: Other PT Losses	-58	-89	-89	-23	-24	-82	-52
135	0	D10K: D10K: Other PT Losses	-58	-89	-89	-23	-24	-82	-52
135	1	D10K: D10K: Other PT Losses	-58	-82	-82	-31	-31	-77	-53
135	2	D10K: D10K: Other PT Losses	-65	-84	-84	-44	-44	-80	-61
137	0	D10K: D10K: Other PT Losses	-152	-23	-23	-264	-264	-52	-177
137	1	D10K: D10K: Other PT Losses	-142	-26	-26	-245	-245	-52	-165
137	2	D10K: D10K: Other PT Losses	-142	-44	-44	-230	-230	-66	-163
138	0	D10K: D10K: Other PT Losses	-142	-44	-44	-230	-230	-66	-163
138	1	D10K: D10K: Other PT Losses	-142	-94	-94	-190	-190	-105	-152
138	2	D10K: D10K: Other PT Losses	-142	-139	-139	-146	-146	-140	-143
139	0	D10K: D10K: Other PT Losses	-142	-139	-139	-146	-146	-140	-143
139	1	D10K: D10K: Other PT Losses	-142	-170	-169	-98	-98	-164	-134
139	2	D10K: D10K: Other PT Losses	-142	-193	-193	-57	-57	-183	-126

MEMBER STRESSES

DECK & CANOPY MEMBERS
D10K

CASE A: LL ON FULL LENGTH OF BRIDGE

(-) compression

σ_{t_allow} = 3sqrt(f'c) = 39.8 ksf
σ_{c_allow} = 0.45(f'c) = -550.8 ksf

			SERVICE III-CASE A						
Member	Station	Result Case	(P/A) @ Centroid (kips/ft²)	Normal Stress @ Point 1 (kips/ft²)	Normal Stress @ Point 2 (kips/ft²)	Normal Stress @ Point 3 (kips/ft²)	Normal Stress @ Point 4 (kips/ft²)	Normal Stress @ Point 5 (kips/ft²)	Normal Stress @ Point 6 (kips/ft²)
140	0	D10K: D10K: Other PT Losses	-142	-193	-193	-57	-57	-183	-126
140	1	D10K: D10K: Other PT Losses	-142	-197	-196	-48	-48	-185	-124
140	2	D10K: D10K: Other PT Losses	-152	-216	-216	-43	-43	-202	-131
142	0	D10K: D10K: Other PT Losses	-162	-117	-117	-207	-207	-129	-171
142	1	D10K: D10K: Other PT Losses	-152	-118	-118	-188	-188	-126	-159
142	2	D10K: D10K: Other PT Losses	-152	-131	-131	-174	-174	-136	-156
143	0	D10K: D10K: Other PT Losses	-152	-131	-131	-174	-174	-136	-156
143	1	D10K: D10K: Other PT Losses	-152	-153	-152	-151	-151	-152	-152
143	2	D10K: D10K: Other PT Losses	-152	-169	-169	-129	-129	-165	-148
144	0	D10K: D10K: Other PT Losses	-152	-169	-169	-129	-129	-165	-148
144	1	D10K: D10K: Other PT Losses	-152	-184	-184	-105	-105	-177	-145
144	2	D10K: D10K: Other PT Losses	-152	-192	-192	-87	-87	-183	-143
145	0	D10K: D10K: Other PT Losses	-152	-192	-192	-87	-87	-183	-143
145	1	D10K: D10K: Other PT Losses	-152	-192	-192	-85	-85	-183	-143
145	2	D10K: D10K: Other PT Losses	-162	-208	-208	-87	-87	-198	-152
147	0	D10K: D10K: Other PT Losses	-168	-110	-110	-227	-227	-123	-179
147	1	D10K: D10K: Other PT Losses	-157	-112	-112	-202	-202	-122	-166
147	2	D10K: D10K: Other PT Losses	-157	-130	-130	-182	-183	-136	-163
148	0	D10K: D10K: Other PT Losses	-157	-130	-130	-182	-183	-136	-163
148	1	D10K: D10K: Other PT Losses	-157	-157	-157	-152	-152	-157	-157
148	2	D10K: D10K: Other PT Losses	-157	-181	-181	-125	-125	-175	-152
149	0	D10K: D10K: Other PT Losses	-157	-181	-181	-125	-125	-175	-152
149	1	D10K: D10K: Other PT Losses	-157	-203	-203	-100	-100	-192	-148
149	2	D10K: D10K: Other PT Losses	-157	-219	-219	-81	-81	-205	-144
150	0	D10K: D10K: Other PT Losses	-157	-219	-219	-81	-81	-205	-144
150	1	D10K: D10K: Other PT Losses	-157	-221	-221	-79	-79	-207	-144
150	2	D10K: D10K: Other PT Losses	-167	-240	-239	-80	-80	-223	-152
152	0	D10K: D10K: Other PT Losses	-168	-172	-172	-116	-116	-171	-167
152	1	D10K: D10K: Other PT Losses	-157	-163	-163	-113	-113	-162	-156
152	2	D10K: D10K: Other PT Losses	-158	-169	-169	-115	-115	-167	-155
153	0	D10K: D10K: Other PT Losses	-158	-169	-169	-115	-115	-167	-155
153	1	D10K: D10K: Other PT Losses	-158	-175	-175	-123	-124	-171	-154
153	2	D10K: D10K: Other PT Losses	-158	-176	-176	-136	-136	-172	-154
154	0	D10K: D10K: Other PT Losses	-158	-176	-176	-136	-136	-172	-154
154	1	D10K: D10K: Other PT Losses	-157	-175	-175	-138	-138	-171	-154
154	2	D10K: D10K: Other PT Losses	-157	-161	-161	-145	-145	-163	-155
155	0	D10K: D10K: Other PT Losses	-157	-161	-161	-145	-145	-163	-155
155	1	D10K: D10K: Other PT Losses	-157	-152	-152	-150	-150	-156	-156
155	2	D10K: D10K: Other PT Losses	-168	-159	-159	-160	-160	-164	-166
157	0	D10K: D10K: Other PT Losses	-162	-122	-122	-154	-154	-131	-163
157	1	D10K: D10K: Other PT Losses	-151	-115	-115	-144	-144	-123	-152
157	2	D10K: D10K: Other PT Losses	-147	-125	-125	-135	-135	-130	-147
158	0	D10K: D10K: Other PT Losses	-147	-125	-125	-135	-135	-130	-147
158	1	D10K: D10K: Other PT Losses	-147	-183	-183	-99	-99	-175	-140
158	2	D10K: D10K: Other PT Losses	-147	-214	-214	-61	-61	-200	-131
159	0	D10K: D10K: Other PT Losses	-147	-214	-214	-61	-61	-200	-131
159	1	D10K: D10K: Other PT Losses	-144	-176	-176	-68	-68	-170	-129
159	2	D10K: D10K: Other PT Losses	-144	-119	-119	-103	-103	-125	-136

MEMBER STRESSES

DECK & CANOPY MEMBERS
D10K

CASE B: LL ON MAIN SPAN ONLY

(-) compression

σ_{t_allow} = 3sqrt(f'c) = 39.8 ksf
σ_{c_allow} = 0.45(f'c) = -550.8 ksf

			SERVICE III-CASE B						
Member	Station	Result Case	(P/A) @ Centroid (kips/ft²)	Normal Stress @ Point 1 (kips/ft²)	Normal Stress @ Point 2 (kips/ft²)	Normal Stress @ Point 3 (kips/ft²)	Normal Stress @ Point 4 (kips/ft²)	Normal Stress @ Point 5 (kips/ft²)	Normal Stress @ Point 6 (kips/ft²)
1	0	D10K: D10K: Other PT Losses	-164	21	21	-137	-137	-35	-442
1	1	D10K: D10K: Other PT Losses	-162	14	14	-136	-136	-39	-427
1	2	D10K: D10K: Other PT Losses	-162	8	8	-137	-137	-44	-416
2	0	D10K: D10K: Other PT Losses	-161	4	4	-137	-137	-46	-393
2	1	D10K: D10K: Other PT Losses	-160	-58	-58	-146	-146	-90	-305
2	2	D10K: D10K: Other PT Losses	-161	-122	-122	-156	-156	-134	-219
3	0	D10K: D10K: Other PT Losses	-116	-58	-58	-108	-108	-76	-204
3	1	D10K: D10K: Other PT Losses	-123	-145	-145	-126	-126	-138	-89
3	2	D10K: D10K: Other PT Losses	-123	-166	-166	-129	-129	-153	-57
4	0	D10K: D10K: Other PT Losses	-123	-166	-166	-129	-129	-153	-57
4	1	D10K: D10K: Other PT Losses	-123	-193	-193	-133	-133	-171	-17
4	2	D10K: D10K: Other PT Losses	-123	-194	-194	-133	-133	-172	-16
5	0	D10K: D10K: Other PT Losses	-123	-194	-194	-133	-133	-172	-16
5	1	D10K: D10K: Other PT Losses	-123	-169	-169	-130	-130	-155	-53
5	2	D10K: D10K: Other PT Losses	-123	-119	-119	-122	-122	-120	-128
6	0	D10K: D10K: Other PT Losses	-123	-119	-119	-122	-122	-120	-128
6	1	D10K: D10K: Other PT Losses	-123	-111	-111	-121	-121	-114	-141
6	2	D10K: D10K: Other PT Losses	-123	-101	-101	-120	-120	-108	-155
7	0	D10K: D10K: Other PT Losses	-127	-88	-88	-121	-121	-100	-185
7	1	D10K: D10K: Other PT Losses	-127	-101	-101	-123	-123	-109	-166
7	2	D10K: D10K: Other PT Losses	-127	-113	-113	-125	-125	-117	-148
8	0	D10K: D10K: Other PT Losses	-113	-95	-95	-111	-111	-101	-140
8	1	D10K: D10K: Other PT Losses	-114	-122	-122	-115	-115	-119	-101
8	2	D10K: D10K: Other PT Losses	-114	-144	-144	-118	-118	-135	-68
9	0	D10K: D10K: Other PT Losses	-114	-144	-144	-118	-118	-135	-68
9	1	D10K: D10K: Other PT Losses	-114	-178	-178	-123	-123	-158	-17
9	2	D10K: D10K: Other PT Losses	-114	-183	-183	-124	-124	-162	-10
10	0	D10K: D10K: Other PT Losses	-114	-183	-183	-124	-124	-162	-10
10	1	D10K: D10K: Other PT Losses	-114	-160	-160	-121	-121	-146	-45
10	2	D10K: D10K: Other PT Losses	-114	-107	-107	-113	-113	-109	-124
11	0	D10K: D10K: Other PT Losses	-114	-107	-107	-113	-113	-109	-124
11	1	D10K: D10K: Other PT Losses	-114	-98	-98	-112	-112	-103	-138
11	2	D10K: D10K: Other PT Losses	-114	-88	-88	-110	-110	-96	-153
12	0	D10K: D10K: Other PT Losses	-114	-94	-94	-112	-111	-100	-145
12	1	D10K: D10K: Other PT Losses	-114	-94	-94	-112	-111	-100	-145
12	2	D10K: D10K: Other PT Losses	-114	-94	-94	-111	-111	-100	-145
13	0	D10K: D10K: Other PT Losses	-120	-97	-97	-117	-117	-104	-156
13	1	D10K: D10K: Other PT Losses	-120	-119	-119	-120	-120	-120	-121
13	2	D10K: D10K: Other PT Losses	-120	-139	-139	-123	-123	-133	-92
14	0	D10K: D10K: Other PT Losses	-120	-139	-139	-123	-123	-133	-92
14	1	D10K: D10K: Other PT Losses	-120	-177	-177	-129	-129	-160	-35
14	2	D10K: D10K: Other PT Losses	-121	-181	-181	-129	-129	-162	-30
15	0	D10K: D10K: Other PT Losses	-121	-181	-181	-129	-129	-162	-30
15	1	D10K: D10K: Other PT Losses	-121	-150	-150	-125	-125	-141	-77
15	2	D10K: D10K: Other PT Losses	-121	-84	-85	-116	-116	-96	-176
16	0	D10K: D10K: Other PT Losses	-121	-84	-85	-116	-116	-96	-176
16	1	D10K: D10K: Other PT Losses	-121	-74	-75	-114	-114	-89	-191
16	2	D10K: D10K: Other PT Losses	-121	-64	-64	-113	-113	-81	-206

MEMBER STRESSES

DECK & CANOPY MEMBERS
D10K

CASE B: LL ON MAIN SPAN ONLY

(-) compression

σ_{t_allow} = 3sqrt(f'c) = 39.8 ksf
σ_{c_allow} = 0.45(f'c) = -550.8 ksf

			SERVICE III-CASE B						
Member	Station	Result Case	(P/A) @ Centroid (kips/ft²)	Normal Stress @ Point 1 (kips/ft²)	Normal Stress @ Point 2 (kips/ft²)	Normal Stress @ Point 3 (kips/ft²)	Normal Stress @ Point 4 (kips/ft²)	Normal Stress @ Point 5 (kips/ft²)	Normal Stress @ Point 6 (kips/ft²)
17	0	D10K: D10K: Other PT Losses	-123	-85	-85	-118	-118	-97	-182
17	1	D10K: D10K: Other PT Losses	-123	-74	-74	-116	-116	-89	-197
17	2	D10K: D10K: Other PT Losses	-123	-63	-63	-114	-114	-81	-213
18	0	D10K: D10K: Other PT Losses	-141	-78	-78	-132	-132	-97	-235
18	1	D10K: D10K: Other PT Losses	-141	-101	-101	-135	-135	-113	-200
18	2	D10K: D10K: Other PT Losses	-141	-121	-121	-138	-138	-127	-169
19	0	D10K: D10K: Other PT Losses	-141	-121	-121	-138	-138	-127	-169
19	1	D10K: D10K: Other PT Losses	-141	-184	-185	-147	-147	-171	-75
19	2	D10K: D10K: Other PT Losses	-141	-207	-207	-151	-151	-187	-42
20	0	D10K: D10K: Other PT Losses	-141	-207	-207	-151	-151	-187	-42
20	1	D10K: D10K: Other PT Losses	-141	-189	-189	-148	-148	-174	-70
20	2	D10K: D10K: Other PT Losses	-142	-127	-128	-140	-140	-133	-159
21	0	D10K: D10K: Other PT Losses	-142	-127	-128	-140	-140	-133	-159
21	1	D10K: D10K: Other PT Losses	-142	-112	-113	-138	-138	-123	-181
21	2	D10K: D10K: Other PT Losses	-141	-96	-96	-135	-135	-112	-205
22	0	D10K: D10K: Other PT Losses	-154	-121	-121	-151	-150	-133	-194
22	1	D10K: D10K: Other PT Losses	-154	-103	-103	-147	-147	-120	-224
22	2	D10K: D10K: Other PT Losses	-154	-84	-84	-144	-144	-107	-254
23	0	D10K: D10K: Other PT Losses	-171	-104	-104	-162	-162	-126	-262
23	1	D10K: D10K: Other PT Losses	-171	-118	-119	-164	-164	-136	-240
23	2	D10K: D10K: Other PT Losses	-171	-133	-133	-166	-166	-146	-220
24	0	D10K: D10K: Other PT Losses	-171	-133	-133	-166	-166	-146	-220
24	1	D10K: D10K: Other PT Losses	-171	-199	-199	-175	-175	-190	-129
24	2	D10K: D10K: Other PT Losses	-171	-213	-213	-177	-177	-200	-108
25	0	D10K: D10K: Other PT Losses	-171	-213	-213	-177	-177	-200	-108
25	1	D10K: D10K: Other PT Losses	-171	-180	-181	-172	-172	-178	-147
25	2	D10K: D10K: Other PT Losses	-171	-101	-101	-161	-160	-122	-257
26	0	D10K: D10K: Other PT Losses	-171	-101	-101	-161	-160	-122	-257
26	1	D10K: D10K: Other PT Losses	-170	-73	-74	-156	-156	-103	-296
26	2	D10K: D10K: Other PT Losses	-169	11	11	-143	-143	-44	-417
29	0	D10K: D10K: Other PT Losses	-97	6	7	-81	-82	-25	-229
29	1	D10K: D10K: Other PT Losses	-95	-44	-43	-88	-88	-59	-154
29	2	D10K: D10K: Other PT Losses	-95	-65	-64	-91	-91	-74	-125
30	0	D10K: D10K: Other PT Losses	-95	-65	-64	-91	-91	-74	-125
30	1	D10K: D10K: Other PT Losses	-95	-124	-123	-99	-100	-115	-47
30	2	D10K: D10K: Other PT Losses	-95	-146	-145	-102	-103	-130	-19
31	0	D10K: D10K: Other PT Losses	-95	-146	-145	-102	-103	-130	-19
31	1	D10K: D10K: Other PT Losses	-95	-131	-130	-100	-101	-120	-41
31	2	D10K: D10K: Other PT Losses	-95	-72	-71	-92	-93	-81	-117
32	0	D10K: D10K: Other PT Losses	-95	-72	-71	-92	-93	-81	-117
32	1	D10K: D10K: Other PT Losses	-95	-60	-60	-91	-91	-72	-133
32	2	D10K: D10K: Other PT Losses	-95	-48	-47	-89	-90	-64	-151
33	0	D10K: D10K: Other PT Losses	-86	-41	-41	-80	-81	-57	-145
33	1	D10K: D10K: Other PT Losses	-86	-44	-44	-81	-81	-60	-138
33	2	D10K: D10K: Other PT Losses	-86	-47	-47	-82	-82	-62	-132
34	0	D10K: D10K: Other PT Losses	-86	-40	-39	-80	-80	-56	-149
34	1	D10K: D10K: Other PT Losses	-86	-46	-46	-80	-81	-61	-140
34	2	D10K: D10K: Other PT Losses	-86	-53	-52	-81	-82	-65	-131

MEMBER STRESSES

DECK & CANOPY MEMBERS
D10K

CASE B: LL ON MAIN SPAN ONLY

(-) compression

σ_{t_allow} = 3sqrt(f'c) = 39.8 ksf
σ_{c_allow} = 0.45(f'c) = -550.8 ksf

			SERVICE III-CASE B						
Member	Station	Result Case	(P/A) @ Centroid (kips/ft²)	Normal Stress @ Point 1 (kips/ft²)	Normal Stress @ Point 2 (kips/ft²)	Normal Stress @ Point 3 (kips/ft²)	Normal Stress @ Point 4 (kips/ft²)	Normal Stress @ Point 5 (kips/ft²)	Normal Stress @ Point 6 (kips/ft²)
35	0	D10K: D10K: Other PT Losses	-86	-53	-52	-81	-82	-65	-131
35	1	D10K: D10K: Other PT Losses	-86	-69	-69	-84	-84	-76	-107
35	2	D10K: D10K: Other PT Losses	-86	-82	-82	-85	-86	-84	-89
36	0	D10K: D10K: Other PT Losses	-86	-82	-82	-85	-86	-84	-89
36	1	D10K: D10K: Other PT Losses	-86	-92	-91	-86	-87	-90	-77
36	2	D10K: D10K: Other PT Losses	-86	-96	-95	-87	-87	-93	-71
37	0	D10K: D10K: Other PT Losses	-86	-96	-95	-87	-87	-93	-71
37	1	D10K: D10K: Other PT Losses	-86	-96	-96	-87	-87	-93	-70
37	2	D10K: D10K: Other PT Losses	-86	-96	-96	-87	-87	-93	-71
38	0	D10K: D10K: Other PT Losses	-79	-83	-83	-79	-80	-82	-73
38	1	D10K: D10K: Other PT Losses	-79	-86	-86	-80	-80	-84	-68
38	2	D10K: D10K: Other PT Losses	-79	-90	-89	-81	-81	-86	-63
39	0	D10K: D10K: Other PT Losses	-80	-77	-77	-79	-79	-78	-84
39	1	D10K: D10K: Other PT Losses	-80	-81	-81	-80	-80	-80	-78
39	2	D10K: D10K: Other PT Losses	-80	-85	-85	-80	-80	-83	-72
40	0	D10K: D10K: Other PT Losses	-80	-85	-85	-80	-80	-83	-72
40	1	D10K: D10K: Other PT Losses	-80	-94	-94	-82	-82	-90	-57
40	2	D10K: D10K: Other PT Losses	-79	-101	-100	-82	-83	-94	-48
41	0	D10K: D10K: Other PT Losses	-79	-101	-100	-82	-83	-94	-48
41	1	D10K: D10K: Other PT Losses	-79	-103	-103	-83	-83	-96	-43
41	2	D10K: D10K: Other PT Losses	-79	-103	-103	-83	-83	-96	-44
42	0	D10K: D10K: Other PT Losses	-79	-103	-103	-83	-83	-96	-44
42	1	D10K: D10K: Other PT Losses	-79	-101	-101	-82	-83	-95	-46
42	2	D10K: D10K: Other PT Losses	-79	-99	-98	-82	-82	-93	-51
43	0	D10K: D10K: Other PT Losses	-75	-90	-90	-77	-78	-86	-51
43	1	D10K: D10K: Other PT Losses	-75	-92	-92	-78	-78	-88	-49
43	2	D10K: D10K: Other PT Losses	-75	-94	-94	-78	-78	-89	-47
44	0	D10K: D10K: Other PT Losses	-75	-85	-85	-77	-77	-84	-57
44	1	D10K: D10K: Other PT Losses	-75	-90	-89	-78	-78	-87	-50
44	2	D10K: D10K: Other PT Losses	-75	-94	-94	-78	-79	-90	-43
45	0	D10K: D10K: Other PT Losses	-75	-94	-94	-78	-79	-90	-43
45	1	D10K: D10K: Other PT Losses	-75	-104	-104	-80	-80	-98	-27
45	2	D10K: D10K: Other PT Losses	-75	-111	-111	-81	-81	-103	-15
46	0	D10K: D10K: Other PT Losses	-75	-111	-111	-81	-81	-103	-15
46	1	D10K: D10K: Other PT Losses	-75	-116	-116	-82	-82	-106	-8
46	2	D10K: D10K: Other PT Losses	-75	-117	-117	-82	-82	-107	-5
47	0	D10K: D10K: Other PT Losses	-75	-117	-117	-82	-82	-107	-5
47	1	D10K: D10K: Other PT Losses	-75	-117	-117	-82	-82	-107	-5
47	2	D10K: D10K: Other PT Losses	-75	-115	-115	-82	-82	-106	-7
48	0	D10K: D10K: Other PT Losses	-77	-114	-114	-84	-84	-104	-5
48	1	D10K: D10K: Other PT Losses	-77	-114	-114	-84	-84	-104	-7
48	2	D10K: D10K: Other PT Losses	-77	-114	-114	-84	-84	-104	-9
49	0	D10K: D10K: Other PT Losses	-77	-112	-112	-84	-84	-103	0
49	1	D10K: D10K: Other PT Losses	-77	-111	-111	-84	-84	-103	-3
49	2	D10K: D10K: Other PT Losses	-77	-110	-110	-83	-83	-102	-6
50	0	D10K: D10K: Other PT Losses	-77	-110	-110	-83	-83	-102	-6
50	1	D10K: D10K: Other PT Losses	-77	-105	-105	-82	-82	-99	-18
50	2	D10K: D10K: Other PT Losses	-77	-98	-98	-81	-81	-94	-33

MEMBER STRESSES

DECK & CANOPY MEMBERS
D10K

CASE B: LL ON MAIN SPAN ONLY

(-) compression

σ_{t_allow} = 3sqrt(f'c) = 39.8 ksf
σ_{c_allow} = 0.45(f'c) = -550.8 ksf

			SERVICE III-CASE B						
Member	Station	Result Case	(P/A) @ Centroid (kips/ft²)	Normal Stress @ Point 1 (kips/ft²)	Normal Stress @ Point 2 (kips/ft²)	Normal Stress @ Point 3 (kips/ft²)	Normal Stress @ Point 4 (kips/ft²)	Normal Stress @ Point 5 (kips/ft²)	Normal Stress @ Point 6 (kips/ft²)
51	0	D10K: D10K: Other PT Losses	-77	-98	-98	-81	-81	-94	-33
51	1	D10K: D10K: Other PT Losses	-76	-88	-88	-79	-79	-87	-52
51	2	D10K: D10K: Other PT Losses	-76	-76	-76	-77	-77	-77	-75
52	0	D10K: D10K: Other PT Losses	-76	-76	-76	-77	-77	-77	-75
52	1	D10K: D10K: Other PT Losses	-76	-64	-64	-75	-75	-68	-95
52	2	D10K: D10K: Other PT Losses	-76	-48	-48	-72	-72	-57	-118
60	0	D10K: D10K: Other PT Losses	0	0	0	0	0	0	0
60	1	D10K: D10K: Other PT Losses	-168	6	6	-143	-143	-47	-430
60	2	D10K: D10K: Other PT Losses	-166	-40	-40	-148	-148	-79	-355
101	0	D10K: D10K: Other PT Losses	-195	-294	-294	-86	-86	-272	-175
101	1	D10K: D10K: Other PT Losses	-194	-168	-168	-222	-222	-174	-199
101	2	D10K: D10K: Other PT Losses	-198	-156	-156	-245	-245	-165	-207
102	0	D10K: D10K: Other PT Losses	-198	-156	-156	-245	-245	-165	-207
102	1	D10K: D10K: Other PT Losses	-201	-287	-287	-107	-107	-268	-183
102	2	D10K: D10K: Other PT Losses	-203	-253	-253	-147	-147	-242	-192
103	0	D10K: D10K: Other PT Losses	-203	-253	-253	-147	-147	-242	-192
103	1	D10K: D10K: Other PT Losses	-210	-254	-254	-160	-160	-244	-200
103	2	D10K: D10K: Other PT Losses	-210	-230	-230	-187	-187	-225	-205
104	0	D10K: D10K: Other PT Losses	-210	-230	-230	-187	-187	-225	-205
104	1	D10K: D10K: Other PT Losses	-209	-216	-216	-202	-203	-214	-208
104	2	D10K: D10K: Other PT Losses	-221	-207	-207	-236	-236	-210	-224
106	0	D10K: D10K: Other PT Losses	-305	-240	-240	-367	-367	-256	-316
106	1	D10K: D10K: Other PT Losses	-291	-242	-242	-337	-337	-255	-300
106	2	D10K: D10K: Other PT Losses	-291	-256	-256	-324	-324	-266	-297
107	0	D10K: D10K: Other PT Losses	-291	-256	-256	-324	-324	-266	-297
107	1	D10K: D10K: Other PT Losses	-292	-320	-320	-260	-260	-314	-286
107	2	D10K: D10K: Other PT Losses	-292	-347	-347	-231	-231	-335	-280
108	0	D10K: D10K: Other PT Losses	-292	-347	-347	-231	-231	-335	-280
108	1	D10K: D10K: Other PT Losses	-292	-343	-343	-235	-235	-332	-281
108	2	D10K: D10K: Other PT Losses	-292	-314	-314	-260	-260	-309	-287
109	0	D10K: D10K: Other PT Losses	-292	-314	-314	-260	-260	-309	-287
109	1	D10K: D10K: Other PT Losses	-292	-300	-300	-273	-273	-298	-290
109	2	D10K: D10K: Other PT Losses	-305	-294	-294	-306	-306	-297	-308
111	0	D10K: D10K: Other PT Losses	-334	-382	-382	-281	-281	-371	-324
111	1	D10K: D10K: Other PT Losses	-320	-375	-375	-259	-259	-363	-308
111	2	D10K: D10K: Other PT Losses	-320	-380	-380	-254	-254	-366	-308
112	0	D10K: D10K: Other PT Losses	-320	-380	-380	-254	-254	-366	-308
112	1	D10K: D10K: Other PT Losses	-320	-400	-400	-233	-233	-382	-304
112	2	D10K: D10K: Other PT Losses	-320	-386	-386	-248	-248	-371	-307
113	0	D10K: D10K: Other PT Losses	-320	-386	-386	-248	-248	-371	-307
113	1	D10K: D10K: Other PT Losses	-321	-342	-342	-298	-298	-337	-316
113	2	D10K: D10K: Other PT Losses	-321	-270	-270	-377	-377	-281	-331
114	0	D10K: D10K: Other PT Losses	-321	-270	-270	-377	-377	-281	-331
114	1	D10K: D10K: Other PT Losses	-321	-245	-245	-404	-404	-262	-336
114	2	D10K: D10K: Other PT Losses	-335	-230	-230	-450	-450	-253	-356
116	0	D10K: D10K: Other PT Losses	-318	-351	-351	-278	-278	-344	-311
116	1	D10K: D10K: Other PT Losses	-304	-345	-345	-258	-258	-336	-296
116	2	D10K: D10K: Other PT Losses	-305	-349	-349	-254	-255	-339	-296

MEMBER STRESSES

DECK & CANOPY MEMBERS
D10K

CASE B: LL ON MAIN SPAN ONLY

(-) compression

σ_{t_allow} = 3sqrt(f'c) = 39.8 ksf
σ_{c_allow} = 0.45(f'c) = -550.8 ksf

			SERVICE III-CASE B						
Member	Station	Result Case	(P/A) @ Centroid (kips/ft²)	Normal Stress @ Point 1 (kips/ft²)	Normal Stress @ Point 2 (kips/ft²)	Normal Stress @ Point 3 (kips/ft²)	Normal Stress @ Point 4 (kips/ft²)	Normal Stress @ Point 5 (kips/ft²)	Normal Stress @ Point 6 (kips/ft²)
117	0	D10K: D10K: Other PT Losses	-305	-349	-349	-254	-255	-339	-296
117	1	D10K: D10K: Other PT Losses	-305	-367	-367	-237	-237	-353	-292
117	2	D10K: D10K: Other PT Losses	-305	-351	-351	-255	-255	-341	-296
118	0	D10K: D10K: Other PT Losses	-305	-351	-351	-255	-255	-341	-296
118	1	D10K: D10K: Other PT Losses	-305	-302	-302	-309	-309	-303	-306
118	2	D10K: D10K: Other PT Losses	-305	-224	-224	-395	-395	-242	-322
119	0	D10K: D10K: Other PT Losses	-305	-224	-224	-395	-395	-242	-322
119	1	D10K: D10K: Other PT Losses	-305	-205	-205	-416	-416	-227	-326
119	2	D10K: D10K: Other PT Losses	-319	-195	-195	-455	-455	-223	-344
121	0	D10K: D10K: Other PT Losses	-248	-261	-261	-224	-224	-259	-243
121	1	D10K: D10K: Other PT Losses	-236	-260	-260	-203	-203	-256	-230
121	2	D10K: D10K: Other PT Losses	-236	-267	-267	-196	-196	-262	-229
122	0	D10K: D10K: Other PT Losses	-236	-267	-267	-196	-196	-262	-229
122	1	D10K: D10K: Other PT Losses	-237	-292	-292	-175	-175	-280	-225
122	2	D10K: D10K: Other PT Losses	-237	-277	-276	-193	-193	-268	-228
123	0	D10K: D10K: Other PT Losses	-237	-277	-276	-193	-193	-268	-228
123	1	D10K: D10K: Other PT Losses	-237	-227	-227	-247	-247	-229	-239
123	2	D10K: D10K: Other PT Losses	-237	-145	-145	-331	-331	-165	-255
124	0	D10K: D10K: Other PT Losses	-237	-145	-145	-331	-331	-165	-255
124	1	D10K: D10K: Other PT Losses	-236	-132	-132	-343	-343	-156	-258
124	2	D10K: D10K: Other PT Losses	-246	-129	-129	-367	-367	-155	-270
126	0	D10K: D10K: Other PT Losses	-117	-178	-178	-51	-51	-164	-105
126	1	D10K: D10K: Other PT Losses	-110	-177	-177	-38	-38	-162	-97
126	2	D10K: D10K: Other PT Losses	-110	-180	-180	-34	-34	-165	-96
127	0	D10K: D10K: Other PT Losses	-110	-180	-180	-34	-34	-165	-96
127	1	D10K: D10K: Other PT Losses	-110	-172	-172	-43	-43	-158	-98
127	2	D10K: D10K: Other PT Losses	-110	-137	-137	-81	-81	-131	-105
128	0	D10K: D10K: Other PT Losses	-110	-137	-137	-81	-81	-131	-105
128	1	D10K: D10K: Other PT Losses	-110	-75	-75	-149	-149	-83	-117
133	0	D10K: D10K: Other PT Losses	-71	7	7	-157	-157	-11	-87
133	1	D10K: D10K: Other PT Losses	-71	-57	-56	-87	-87	-60	-74
133	2	D10K: D10K: Other PT Losses	-71	-94	-94	-45	-45	-89	-66
134	0	D10K: D10K: Other PT Losses	-71	-94	-94	-45	-45	-89	-66
134	1	D10K: D10K: Other PT Losses	-71	-105	-105	-32	-32	-98	-63
134	2	D10K: D10K: Other PT Losses	-70	-90	-89	-49	-49	-85	-66
135	0	D10K: D10K: Other PT Losses	-70	-90	-89	-49	-49	-85	-66
135	1	D10K: D10K: Other PT Losses	-70	-80	-80	-59	-60	-78	-68
135	2	D10K: D10K: Other PT Losses	-77	-80	-80	-74	-75	-79	-77
137	0	D10K: D10K: Other PT Losses	-149	-29	-29	-255	-255	-55	-170
137	1	D10K: D10K: Other PT Losses	-139	-30	-30	-237	-237	-54	-159
137	2	D10K: D10K: Other PT Losses	-139	-47	-47	-222	-222	-67	-156
138	0	D10K: D10K: Other PT Losses	-139	-47	-47	-222	-222	-67	-156
138	1	D10K: D10K: Other PT Losses	-139	-92	-92	-184	-184	-103	-149
138	2	D10K: D10K: Other PT Losses	-139	-132	-132	-146	-147	-134	-141
139	0	D10K: D10K: Other PT Losses	-139	-132	-132	-146	-147	-134	-141
139	1	D10K: D10K: Other PT Losses	-139	-160	-160	-103	-104	-156	-133
139	2	D10K: D10K: Other PT Losses	-139	-182	-182	-67	-67	-173	-126

MEMBER STRESSES

DECK & CANOPY MEMBERS
D10K

CASE B: LL ON MAIN SPAN ONLY

(-) compression

σ_{t_allow} = 3sqrt(f'c) = 39.8 ksf
σ_{c_allow} = 0.45(f'c) = -550.8 ksf

			SERVICE III-CASE B						
Member	Station	Result Case	(P/A) @ Centroid (kips/ft²)	Normal Stress @ Point 1 (kips/ft²)	Normal Stress @ Point 2 (kips/ft²)	Normal Stress @ Point 3 (kips/ft²)	Normal Stress @ Point 4 (kips/ft²)	Normal Stress @ Point 5 (kips/ft²)	Normal Stress @ Point 6 (kips/ft²)
140	0	D10K: D10K: Other PT Losses	-139	-182	-182	-67	-67	-173	-126
140	1	D10K: D10K: Other PT Losses	-139	-185	-185	-60	-60	-175	-124
140	2	D10K: D10K: Other PT Losses	-149	-204	-204	-56	-57	-192	-131
142	0	D10K: D10K: Other PT Losses	-157	-110	-110	-208	-208	-120	-166
142	1	D10K: D10K: Other PT Losses	-146	-108	-108	-188	-189	-116	-154
142	2	D10K: D10K: Other PT Losses	-146	-121	-121	-174	-174	-127	-152
143	0	D10K: D10K: Other PT Losses	-146	-121	-121	-174	-174	-127	-152
143	1	D10K: D10K: Other PT Losses	-146	-143	-143	-150	-150	-144	-147
143	2	D10K: D10K: Other PT Losses	-146	-161	-161	-128	-128	-158	-143
144	0	D10K: D10K: Other PT Losses	-146	-161	-161	-128	-128	-158	-143
144	1	D10K: D10K: Other PT Losses	-146	-177	-177	-106	-106	-170	-140
144	2	D10K: D10K: Other PT Losses	-146	-186	-186	-91	-91	-177	-138
145	0	D10K: D10K: Other PT Losses	-146	-186	-186	-91	-91	-177	-138
145	1	D10K: D10K: Other PT Losses	-146	-186	-186	-89	-89	-177	-138
145	2	D10K: D10K: Other PT Losses	-156	-203	-203	-92	-92	-192	-147
147	0	D10K: D10K: Other PT Losses	-163	-101	-101	-227	-227	-115	-176
147	1	D10K: D10K: Other PT Losses	-152	-104	-104	-202	-202	-115	-163
147	2	D10K: D10K: Other PT Losses	-153	-122	-122	-182	-182	-129	-159
148	0	D10K: D10K: Other PT Losses	-153	-122	-122	-182	-182	-129	-159
148	1	D10K: D10K: Other PT Losses	-153	-150	-150	-152	-152	-151	-153
148	2	D10K: D10K: Other PT Losses	-153	-174	-174	-126	-126	-169	-148
149	0	D10K: D10K: Other PT Losses	-153	-174	-174	-126	-126	-169	-148
149	1	D10K: D10K: Other PT Losses	-152	-197	-197	-102	-102	-187	-143
149	2	D10K: D10K: Other PT Losses	-152	-213	-213	-83	-83	-200	-140
150	0	D10K: D10K: Other PT Losses	-152	-213	-213	-83	-83	-200	-140
150	1	D10K: D10K: Other PT Losses	-152	-216	-216	-81	-81	-202	-139
150	2	D10K: D10K: Other PT Losses	-163	-235	-235	-82	-82	-219	-148
152	0	D10K: D10K: Other PT Losses	-165	-158	-158	-141	-142	-159	-167
152	1	D10K: D10K: Other PT Losses	-155	-150	-150	-133	-133	-151	-156
152	2	D10K: D10K: Other PT Losses	-155	-159	-159	-131	-131	-158	-154
153	0	D10K: D10K: Other PT Losses	-155	-159	-159	-131	-131	-158	-154
153	1	D10K: D10K: Other PT Losses	-155	-168	-168	-131	-131	-165	-152
153	2	D10K: D10K: Other PT Losses	-155	-173	-173	-134	-134	-169	-151
154	0	D10K: D10K: Other PT Losses	-155	-173	-173	-134	-134	-169	-151
154	1	D10K: D10K: Other PT Losses	-155	-176	-176	-131	-131	-171	-150
154	2	D10K: D10K: Other PT Losses	-155	-167	-167	-134	-134	-166	-151
155	0	D10K: D10K: Other PT Losses	-155	-167	-167	-134	-134	-166	-151
155	1	D10K: D10K: Other PT Losses	-154	-160	-160	-138	-138	-161	-151
155	2	D10K: D10K: Other PT Losses	-165	-170	-170	-146	-146	-171	-161
157	0	D10K: D10K: Other PT Losses	-162	-118	-118	-176	-176	-128	-166
157	1	D10K: D10K: Other PT Losses	-150	-113	-112	-163	-163	-121	-154
157	2	D10K: D10K: Other PT Losses	-147	-123	-123	-150	-150	-128	-149
158	0	D10K: D10K: Other PT Losses	-147	-123	-123	-150	-150	-128	-149
158	1	D10K: D10K: Other PT Losses	-147	-182	-182	-103	-103	-174	-140
158	2	D10K: D10K: Other PT Losses	-147	-219	-219	-60	-60	-203	-131
159	0	D10K: D10K: Other PT Losses	-147	-219	-219	-60	-60	-203	-131
159	1	D10K: D10K: Other PT Losses	-143	-191	-191	-64	-64	-181	-129
159	2	D10K: D10K: Other PT Losses	-143	-145	-145	-97	-97	-145	-135

MEMBER STRESSES

DECK & CANOPY MEMBERS
D10K

CASE C: LL ON BACK SPAN ONLY

(-) compression

σ_{t_allow} = 3sqrt(f'c) = 39.8 ksf
σ_{c_allow} = 0.45(f'c) = -550.8 ksf

			SERVICE III-CASE C						
Member	Station	Result Case	(P/A) @ Centroid (kips/ft²)	Normal Stress @ Point 1 (kips/ft²)	Normal Stress @ Point 2 (kips/ft²)	Normal Stress @ Point 3 (kips/ft²)	Normal Stress @ Point 4 (kips/ft²)	Normal Stress @ Point 5 (kips/ft²)	Normal Stress @ Point 6 (kips/ft²)
1	0	D10K: D10K: Other PT Losses	-164	21	21	-137	-137	-35	-442
1	1	D10K: D10K: Other PT Losses	-162	14	14	-136	-136	-39	-427
1	2	D10K: D10K: Other PT Losses	-162	8	8	-137	-137	-44	-416
2	0	D10K: D10K: Other PT Losses	-161	3	3	-137	-137	-47	-391
2	1	D10K: D10K: Other PT Losses	-160	-54	-54	-146	-146	-87	-311
2	2	D10K: D10K: Other PT Losses	-161	-112	-112	-154	-154	-128	-233
3	0	D10K: D10K: Other PT Losses	-123	-60	-60	-113	-113	-79	-216
3	1	D10K: D10K: Other PT Losses	-129	-143	-143	-131	-131	-139	-108
3	2	D10K: D10K: Other PT Losses	-129	-160	-160	-134	-134	-151	-82
4	0	D10K: D10K: Other PT Losses	-129	-160	-160	-134	-134	-151	-82
4	1	D10K: D10K: Other PT Losses	-129	-183	-183	-137	-137	-167	-47
4	2	D10K: D10K: Other PT Losses	-129	-186	-186	-137	-137	-169	-43
5	0	D10K: D10K: Other PT Losses	-129	-186	-186	-137	-137	-169	-43
5	1	D10K: D10K: Other PT Losses	-129	-169	-169	-135	-135	-157	-69
5	2	D10K: D10K: Other PT Losses	-129	-131	-131	-130	-130	-131	-126
6	0	D10K: D10K: Other PT Losses	-129	-131	-131	-130	-130	-131	-126
6	1	D10K: D10K: Other PT Losses	-129	-125	-125	-129	-129	-126	-136
6	2	D10K: D10K: Other PT Losses	-129	-118	-118	-128	-128	-121	-146
7	0	D10K: D10K: Other PT Losses	-132	-107	-107	-129	-129	-115	-171
7	1	D10K: D10K: Other PT Losses	-132	-117	-117	-130	-130	-122	-156
7	2	D10K: D10K: Other PT Losses	-133	-127	-127	-132	-132	-129	-141
8	0	D10K: D10K: Other PT Losses	-121	-112	-112	-120	-120	-115	-134
8	1	D10K: D10K: Other PT Losses	-121	-133	-133	-123	-123	-129	-103
8	2	D10K: D10K: Other PT Losses	-121	-150	-150	-125	-125	-141	-78
9	0	D10K: D10K: Other PT Losses	-121	-150	-150	-125	-125	-141	-78
9	1	D10K: D10K: Other PT Losses	-121	-176	-176	-129	-129	-160	-39
9	2	D10K: D10K: Other PT Losses	-121	-180	-180	-130	-130	-162	-34
10	0	D10K: D10K: Other PT Losses	-121	-180	-180	-130	-130	-162	-34
10	1	D10K: D10K: Other PT Losses	-122	-161	-161	-127	-127	-149	-62
10	2	D10K: D10K: Other PT Losses	-122	-119	-119	-121	-121	-120	-125
11	0	D10K: D10K: Other PT Losses	-122	-119	-119	-121	-121	-120	-125
11	1	D10K: D10K: Other PT Losses	-122	-112	-112	-120	-120	-115	-137
11	2	D10K: D10K: Other PT Losses	-122	-104	-104	-119	-119	-110	-148
12	0	D10K: D10K: Other PT Losses	-122	-111	-111	-120	-120	-114	-139
12	1	D10K: D10K: Other PT Losses	-122	-110	-110	-120	-120	-114	-140
12	2	D10K: D10K: Other PT Losses	-122	-110	-110	-120	-120	-113	-140
13	0	D10K: D10K: Other PT Losses	-127	-112	-112	-125	-125	-117	-150
13	1	D10K: D10K: Other PT Losses	-127	-130	-130	-128	-128	-129	-123
13	2	D10K: D10K: Other PT Losses	-127	-145	-145	-130	-130	-140	-100
14	0	D10K: D10K: Other PT Losses	-127	-145	-145	-130	-130	-140	-100
14	1	D10K: D10K: Other PT Losses	-127	-175	-175	-134	-134	-160	-56
14	2	D10K: D10K: Other PT Losses	-128	-177	-177	-135	-135	-162	-53
15	0	D10K: D10K: Other PT Losses	-128	-177	-177	-135	-135	-162	-53
15	1	D10K: D10K: Other PT Losses	-128	-152	-152	-131	-131	-145	-91
15	2	D10K: D10K: Other PT Losses	-128	-100	-100	-124	-124	-109	-170
16	0	D10K: D10K: Other PT Losses	-128	-100	-100	-124	-124	-109	-170
16	1	D10K: D10K: Other PT Losses	-128	-93	-93	-123	-123	-103	-181
16	2	D10K: D10K: Other PT Losses	-128	-84	-84	-122	-122	-98	-194

MEMBER STRESSES

DECK & CANOPY MEMBERS
D10K

CASE C: LL ON BACK SPAN ONLY

(-) compression

σ_{t_allow} = 3sqrt(f'c) = 39.8 ksf
σ_{c_allow} = 0.45(f'c) = -550.8 ksf

			SERVICE III-CASE C						
Member	Station	Result Case	(P/A) @ Centroid (kips/ft²)	Normal Stress @ Point 1 (kips/ft²)	Normal Stress @ Point 2 (kips/ft²)	Normal Stress @ Point 3 (kips/ft²)	Normal Stress @ Point 4 (kips/ft²)	Normal Stress @ Point 5 (kips/ft²)	Normal Stress @ Point 6 (kips/ft²)
17	0	D10K: D10K: Other PT Losses	-130	-103	-103	-127	-127	-112	-171
17	1	D10K: D10K: Other PT Losses	-130	-94	-94	-125	-125	-105	-186
17	2	D10K: D10K: Other PT Losses	-130	-83	-83	-123	-123	-98	-200
18	0	D10K: D10K: Other PT Losses	-146	-97	-97	-139	-139	-112	-219
18	1	D10K: D10K: Other PT Losses	-145	-115	-115	-141	-141	-124	-191
18	2	D10K: D10K: Other PT Losses	-145	-131	-131	-143	-143	-135	-167
19	0	D10K: D10K: Other PT Losses	-145	-131	-131	-143	-143	-135	-167
19	1	D10K: D10K: Other PT Losses	-146	-182	-182	-151	-151	-171	-91
19	2	D10K: D10K: Other PT Losses	-146	-200	-200	-154	-154	-184	-64
20	0	D10K: D10K: Other PT Losses	-146	-200	-200	-154	-154	-184	-64
20	1	D10K: D10K: Other PT Losses	-146	-187	-187	-152	-152	-174	-85
20	2	D10K: D10K: Other PT Losses	-146	-139	-139	-146	-146	-143	-154
21	0	D10K: D10K: Other PT Losses	-146	-139	-139	-146	-146	-143	-154
21	1	D10K: D10K: Other PT Losses	-146	-127	-127	-144	-144	-135	-171
21	2	D10K: D10K: Other PT Losses	-146	-114	-114	-142	-142	-126	-189
22	0	D10K: D10K: Other PT Losses	-158	-137	-137	-156	-156	-145	-180
22	1	D10K: D10K: Other PT Losses	-158	-121	-121	-153	-153	-134	-206
22	2	D10K: D10K: Other PT Losses	-157	-104	-104	-150	-150	-122	-232
23	0	D10K: D10K: Other PT Losses	-172	-121	-121	-166	-166	-138	-239
23	1	D10K: D10K: Other PT Losses	-172	-132	-132	-167	-167	-146	-222
23	2	D10K: D10K: Other PT Losses	-172	-143	-143	-168	-168	-154	-207
24	0	D10K: D10K: Other PT Losses	-172	-143	-143	-168	-168	-154	-207
24	1	D10K: D10K: Other PT Losses	-172	-195	-195	-175	-175	-188	-138
24	2	D10K: D10K: Other PT Losses	-172	-204	-204	-177	-177	-194	-124
25	0	D10K: D10K: Other PT Losses	-172	-204	-204	-177	-177	-194	-124
25	1	D10K: D10K: Other PT Losses	-172	-177	-177	-173	-173	-175	-156
25	2	D10K: D10K: Other PT Losses	-172	-113	-113	-163	-163	-131	-242
26	0	D10K: D10K: Other PT Losses	-172	-113	-113	-163	-163	-131	-242
26	1	D10K: D10K: Other PT Losses	-172	-90	-90	-160	-160	-115	-274
26	2	D10K: D10K: Other PT Losses	-170	-12	-12	-147	-147	-60	-386
29	0	D10K: D10K: Other PT Losses	-92	32	33	-73	-74	-5	-255
29	1	D10K: D10K: Other PT Losses	-90	-25	-24	-80	-81	-44	-170
29	2	D10K: D10K: Other PT Losses	-90	-52	-51	-84	-85	-63	-132
30	0	D10K: D10K: Other PT Losses	-90	-52	-51	-84	-85	-63	-132
30	1	D10K: D10K: Other PT Losses	-90	-127	-126	-95	-96	-115	-31
30	2	D10K: D10K: Other PT Losses	-90	-155	-154	-99	-100	-135	6
31	0	D10K: D10K: Other PT Losses	-90	-155	-154	-99	-100	-135	6
31	1	D10K: D10K: Other PT Losses	-90	-136	-135	-96	-97	-122	-21
31	2	D10K: D10K: Other PT Losses	-90	-63	-62	-87	-87	-73	-118
32	0	D10K: D10K: Other PT Losses	-90	-63	-62	-87	-87	-73	-118
32	1	D10K: D10K: Other PT Losses	-90	-48	-48	-85	-85	-63	-139
32	2	D10K: D10K: Other PT Losses	-90	-33	-32	-83	-83	-52	-160
33	0	D10K: D10K: Other PT Losses	-80	-27	-26	-73	-74	-45	-152
33	1	D10K: D10K: Other PT Losses	-80	-30	-29	-74	-74	-48	-146
33	2	D10K: D10K: Other PT Losses	-80	-33	-32	-74	-75	-50	-139
34	0	D10K: D10K: Other PT Losses	-80	-26	-25	-73	-73	-45	-155
34	1	D10K: D10K: Other PT Losses	-80	-34	-34	-74	-74	-51	-144
34	2	D10K: D10K: Other PT Losses	-80	-42	-41	-75	-75	-56	-133

MEMBER STRESSES

DECK & CANOPY MEMBERS
D10K

CASE C: LL ON BACK SPAN ONLY

(-) compression

σ_{t_allow} = 3sqrt(f'c) = 39.8 ksf
σ_{c_allow} = 0.45(f'c) = -550.8 ksf

			SERVICE III-CASE C						
Member	Station	Result Case	(P/A) @ Centroid (kips/ft²)	Normal Stress @ Point 1 (kips/ft²)	Normal Stress @ Point 2 (kips/ft²)	Normal Stress @ Point 3 (kips/ft²)	Normal Stress @ Point 4 (kips/ft²)	Normal Stress @ Point 5 (kips/ft²)	Normal Stress @ Point 6 (kips/ft²)
35	0	D10K: D10K: Other PT Losses	-80	-42	-41	-75	-75	-56	-133
35	1	D10K: D10K: Other PT Losses	-80	-62	-62	-78	-78	-69	-103
35	2	D10K: D10K: Other PT Losses	-80	-78	-78	-80	-80	-79	-82
36	0	D10K: D10K: Other PT Losses	-80	-78	-78	-80	-80	-79	-82
36	1	D10K: D10K: Other PT Losses	-80	-89	-88	-81	-81	-86	-67
36	2	D10K: D10K: Other PT Losses	-80	-93	-93	-82	-82	-89	-60
37	0	D10K: D10K: Other PT Losses	-80	-93	-93	-82	-82	-89	-60
37	1	D10K: D10K: Other PT Losses	-80	-94	-93	-82	-82	-89	-60
37	2	D10K: D10K: Other PT Losses	-80	-93	-93	-82	-82	-89	-61
38	0	D10K: D10K: Other PT Losses	-74	-81	-80	-74	-75	-78	-63
38	1	D10K: D10K: Other PT Losses	-74	-84	-83	-75	-75	-81	-59
38	2	D10K: D10K: Other PT Losses	-74	-87	-86	-75	-76	-83	-54
39	0	D10K: D10K: Other PT Losses	-74	-75	-75	-74	-74	-75	-73
39	1	D10K: D10K: Other PT Losses	-74	-80	-79	-75	-75	-78	-66
39	2	D10K: D10K: Other PT Losses	-74	-84	-84	-75	-76	-81	-59
40	0	D10K: D10K: Other PT Losses	-74	-84	-84	-75	-76	-81	-59
40	1	D10K: D10K: Other PT Losses	-74	-95	-95	-77	-77	-88	-43
40	2	D10K: D10K: Other PT Losses	-74	-101	-101	-78	-78	-93	-33
41	0	D10K: D10K: Other PT Losses	-74	-101	-101	-78	-78	-93	-33
41	1	D10K: D10K: Other PT Losses	-74	-104	-103	-78	-78	-95	-29
41	2	D10K: D10K: Other PT Losses	-74	-102	-102	-78	-78	-93	-32
42	0	D10K: D10K: Other PT Losses	-74	-102	-102	-78	-78	-93	-32
42	1	D10K: D10K: Other PT Losses	-74	-99	-99	-77	-78	-91	-36
42	2	D10K: D10K: Other PT Losses	-74	-94	-94	-77	-77	-88	-43
43	0	D10K: D10K: Other PT Losses	-71	-88	-88	-73	-74	-84	-43
43	1	D10K: D10K: Other PT Losses	-71	-90	-89	-74	-74	-84	-42
43	2	D10K: D10K: Other PT Losses	-71	-91	-91	-74	-74	-85	-41
44	0	D10K: D10K: Other PT Losses	-71	-84	-84	-73	-73	-82	-46
44	1	D10K: D10K: Other PT Losses	-71	-90	-89	-74	-74	-86	-37
44	2	D10K: D10K: Other PT Losses	-71	-95	-94	-74	-75	-89	-30
45	0	D10K: D10K: Other PT Losses	-71	-95	-94	-74	-75	-89	-30
45	1	D10K: D10K: Other PT Losses	-71	-106	-106	-76	-76	-98	-12
45	2	D10K: D10K: Other PT Losses	-71	-114	-113	-77	-77	-103	0
46	0	D10K: D10K: Other PT Losses	-71	-114	-113	-77	-77	-103	0
46	1	D10K: D10K: Other PT Losses	-70	-118	-118	-78	-78	-106	7
46	2	D10K: D10K: Other PT Losses	-70	-118	-118	-78	-78	-106	9
47	0	D10K: D10K: Other PT Losses	-70	-118	-118	-78	-78	-106	9
47	1	D10K: D10K: Other PT Losses	-70	-117	-117	-78	-78	-105	7
47	2	D10K: D10K: Other PT Losses	-70	-113	-113	-77	-78	-103	2
48	0	D10K: D10K: Other PT Losses	-74	-116	-116	-82	-82	-105	5
48	1	D10K: D10K: Other PT Losses	-74	-115	-115	-82	-82	-105	2
48	2	D10K: D10K: Other PT Losses	-74	-114	-114	-81	-82	-104	-1
49	0	D10K: D10K: Other PT Losses	-73	-117	-117	-82	-82	-105	15
49	1	D10K: D10K: Other PT Losses	-73	-116	-116	-81	-82	-105	12
49	2	D10K: D10K: Other PT Losses	-73	-114	-114	-81	-81	-104	8
50	0	D10K: D10K: Other PT Losses	-73	-114	-114	-81	-81	-104	8
50	1	D10K: D10K: Other PT Losses	-73	-108	-108	-80	-80	-99	-6
50	2	D10K: D10K: Other PT Losses	-73	-99	-99	-78	-78	-93	-24

MEMBER STRESSES

DECK & CANOPY MEMBERS
D10K

CASE C: LL ON BACK SPAN ONLY

(-) compression

σ_{t_allow} = 3sqrt(f'c) = 39.8 ksf
σ_{c_allow} = 0.45(f'c) = -550.8 ksf

			SERVICE III-CASE C						
Member	Station	Result Case	(P/A) @ Centroid (kips/ft²)	Normal Stress @ Point 1 (kips/ft²)	Normal Stress @ Point 2 (kips/ft²)	Normal Stress @ Point 3 (kips/ft²)	Normal Stress @ Point 4 (kips/ft²)	Normal Stress @ Point 5 (kips/ft²)	Normal Stress @ Point 6 (kips/ft²)
51	0	D10K: D10K: Other PT Losses	-73	-99	-99	-78	-78	-93	-24
51	1	D10K: D10K: Other PT Losses	-73	-86	-86	-76	-76	-84	-47
51	2	D10K: D10K: Other PT Losses	-73	-70	-70	-73	-73	-72	-75
52	0	D10K: D10K: Other PT Losses	-73	-70	-70	-73	-73	-72	-75
52	1	D10K: D10K: Other PT Losses	-73	-55	-55	-70	-70	-60	-100
52	2	D10K: D10K: Other PT Losses	-73	-36	-36	-67	-67	-47	-129
60	0	D10K: D10K: Other PT Losses	0	0	0	0	0	0	0
60	1	D10K: D10K: Other PT Losses	-168	6	6	-143	-143	-47	-430
60	2	D10K: D10K: Other PT Losses	-166	-40	-40	-148	-148	-79	-355
101	0	D10K: D10K: Other PT Losses	-195	-294	-294	-86	-86	-272	-175
101	1	D10K: D10K: Other PT Losses	-194	-168	-168	-222	-222	-174	-199
101	2	D10K: D10K: Other PT Losses	-198	-156	-156	-245	-245	-165	-207
102	0	D10K: D10K: Other PT Losses	-198	-156	-156	-245	-245	-165	-207
102	1	D10K: D10K: Other PT Losses	-201	-287	-287	-107	-107	-268	-183
102	2	D10K: D10K: Other PT Losses	-203	-253	-253	-147	-147	-242	-192
103	0	D10K: D10K: Other PT Losses	-203	-253	-253	-147	-147	-242	-192
103	1	D10K: D10K: Other PT Losses	-210	-254	-254	-160	-160	-244	-200
103	2	D10K: D10K: Other PT Losses	-210	-230	-230	-187	-187	-225	-205
104	0	D10K: D10K: Other PT Losses	-210	-230	-230	-187	-187	-225	-205
104	1	D10K: D10K: Other PT Losses	-209	-216	-216	-202	-203	-214	-208
104	2	D10K: D10K: Other PT Losses	-221	-207	-207	-236	-236	-210	-224
106	0	D10K: D10K: Other PT Losses	-290	-247	-246	-328	-328	-258	-297
106	1	D10K: D10K: Other PT Losses	-276	-248	-248	-300	-300	-256	-281
106	2	D10K: D10K: Other PT Losses	-276	-260	-260	-288	-289	-265	-279
107	0	D10K: D10K: Other PT Losses	-276	-260	-260	-288	-288	-265	-279
107	1	D10K: D10K: Other PT Losses	-277	-315	-315	-234	-234	-307	-269
107	2	D10K: D10K: Other PT Losses	-277	-333	-333	-215	-215	-321	-265
108	0	D10K: D10K: Other PT Losses	-277	-333	-333	-215	-215	-321	-265
108	1	D10K: D10K: Other PT Losses	-277	-321	-321	-228	-228	-311	-268
108	2	D10K: D10K: Other PT Losses	-277	-284	-284	-262	-262	-282	-276
109	0	D10K: D10K: Other PT Losses	-277	-284	-284	-262	-262	-282	-276
109	1	D10K: D10K: Other PT Losses	-277	-267	-266	-278	-279	-269	-279
109	2	D10K: D10K: Other PT Losses	-291	-257	-257	-315	-315	-265	-297
111	0	D10K: D10K: Other PT Losses	-313	-353	-353	-268	-268	-344	-304
111	1	D10K: D10K: Other PT Losses	-299	-347	-347	-246	-246	-336	-289
111	2	D10K: D10K: Other PT Losses	-299	-352	-352	-240	-240	-340	-288
112	0	D10K: D10K: Other PT Losses	-299	-352	-352	-240	-240	-340	-288
112	1	D10K: D10K: Other PT Losses	-299	-373	-373	-218	-218	-357	-284
112	2	D10K: D10K: Other PT Losses	-299	-360	-360	-232	-233	-347	-287
113	0	D10K: D10K: Other PT Losses	-299	-360	-360	-232	-233	-347	-287
113	1	D10K: D10K: Other PT Losses	-300	-317	-317	-280	-280	-313	-296
113	2	D10K: D10K: Other PT Losses	-300	-246	-246	-358	-358	-258	-311
114	0	D10K: D10K: Other PT Losses	-300	-246	-246	-358	-358	-258	-311
114	1	D10K: D10K: Other PT Losses	-300	-222	-222	-385	-385	-239	-316
114	2	D10K: D10K: Other PT Losses	-314	-207	-207	-431	-431	-231	-336
116	0	D10K: D10K: Other PT Losses	-297	-323	-323	-266	-266	-317	-292
116	1	D10K: D10K: Other PT Losses	-284	-317	-317	-245	-245	-309	-277
116	2	D10K: D10K: Other PT Losses	-284	-321	-321	-241	-241	-313	-276

MEMBER STRESSES

DECK & CANOPY MEMBERS
D10K

CASE C: LL ON BACK SPAN ONLY

(-) compression

σ_{t_allow} = 3sqrt(f'c) = 39.8 ksf
σ_{c_allow} = 0.45(f'c) = -550.8 ksf

			SERVICE III-CASE C						
Member	Station	Result Case	(P/A) @ Centroid (kips/ft²)	Normal Stress @ Point 1 (kips/ft²)	Normal Stress @ Point 2 (kips/ft²)	Normal Stress @ Point 3 (kips/ft²)	Normal Stress @ Point 4 (kips/ft²)	Normal Stress @ Point 5 (kips/ft²)	Normal Stress @ Point 6 (kips/ft²)
117	0	D10K: D10K: Other PT Losses	-284	-321	-321	-241	-241	-313	-276
117	1	D10K: D10K: Other PT Losses	-284	-342	-342	-221	-221	-329	-272
117	2	D10K: D10K: Other PT Losses	-284	-328	-328	-236	-236	-318	-275
118	0	D10K: D10K: Other PT Losses	-284	-328	-328	-236	-236	-318	-275
118	1	D10K: D10K: Other PT Losses	-285	-282	-282	-287	-287	-283	-285
118	2	D10K: D10K: Other PT Losses	-285	-206	-206	-371	-371	-224	-301
119	0	D10K: D10K: Other PT Losses	-285	-206	-206	-371	-371	-224	-301
119	1	D10K: D10K: Other PT Losses	-285	-187	-187	-391	-391	-209	-305
119	2	D10K: D10K: Other PT Losses	-298	-178	-178	-429	-429	-205	-323
121	0	D10K: D10K: Other PT Losses	-235	-240	-240	-220	-220	-240	-232
121	1	D10K: D10K: Other PT Losses	-223	-239	-239	-198	-198	-237	-219
121	2	D10K: D10K: Other PT Losses	-224	-247	-247	-190	-190	-243	-217
122	0	D10K: D10K: Other PT Losses	-224	-247	-247	-190	-190	-243	-217
122	1	D10K: D10K: Other PT Losses	-224	-275	-275	-166	-167	-264	-213
122	2	D10K: D10K: Other PT Losses	-224	-262	-262	-181	-181	-254	-216
123	0	D10K: D10K: Other PT Losses	-224	-262	-262	-181	-181	-254	-216
123	1	D10K: D10K: Other PT Losses	-224	-216	-216	-232	-232	-218	-225
123	2	D10K: D10K: Other PT Losses	-224	-137	-136	-313	-313	-156	-242
124	0	D10K: D10K: Other PT Losses	-224	-137	-136	-313	-313	-156	-242
124	1	D10K: D10K: Other PT Losses	-224	-124	-124	-325	-325	-146	-244
124	2	D10K: D10K: Other PT Losses	-233	-121	-121	-349	-349	-146	-257
126	0	D10K: D10K: Other PT Losses	-118	-165	-165	-67	-68	-154	-109
126	1	D10K: D10K: Other PT Losses	-111	-165	-165	-52	-53	-153	-100
126	2	D10K: D10K: Other PT Losses	-111	-170	-170	-47	-47	-157	-99
127	0	D10K: D10K: Other PT Losses	-111	-170	-170	-47	-47	-157	-99
127	1	D10K: D10K: Other PT Losses	-111	-167	-167	-50	-50	-155	-100
127	2	D10K: D10K: Other PT Losses	-111	-138	-138	-82	-82	-132	-106
128	0	D10K: D10K: Other PT Losses	-111	-138	-138	-82	-82	-132	-106
128	1	D10K: D10K: Other PT Losses	-111	-82	-82	-143	-143	-89	-117
133	0	D10K: D10K: Other PT Losses	-77	6	6	-168	-168	-13	-94
133	1	D10K: D10K: Other PT Losses	-77	-60	-60	-95	-95	-64	-80
133	2	D10K: D10K: Other PT Losses	-76	-101	-101	-50	-50	-95	-72
134	0	D10K: D10K: Other PT Losses	-76	-101	-101	-50	-50	-95	-72
134	1	D10K: D10K: Other PT Losses	-76	-115	-114	-34	-34	-106	-68
134	2	D10K: D10K: Other PT Losses	-76	-102	-101	-48	-48	-96	-71
135	0	D10K: D10K: Other PT Losses	-76	-102	-101	-48	-48	-96	-71
135	1	D10K: D10K: Other PT Losses	-76	-93	-93	-57	-58	-89	-73
135	2	D10K: D10K: Other PT Losses	-83	-94	-94	-72	-72	-91	-81
137	0	D10K: D10K: Other PT Losses	-162	-42	-41	-269	-269	-68	-184
137	1	D10K: D10K: Other PT Losses	-153	-44	-43	-250	-250	-68	-172
137	2	D10K: D10K: Other PT Losses	-153	-61	-61	-235	-235	-81	-169
138	0	D10K: D10K: Other PT Losses	-153	-61	-61	-235	-235	-81	-169
138	1	D10K: D10K: Other PT Losses	-153	-108	-108	-195	-195	-118	-162
138	2	D10K: D10K: Other PT Losses	-153	-149	-149	-156	-156	-150	-153
139	0	D10K: D10K: Other PT Losses	-153	-149	-149	-156	-156	-150	-153
139	1	D10K: D10K: Other PT Losses	-153	-179	-179	-111	-111	-174	-145
139	2	D10K: D10K: Other PT Losses	-153	-203	-203	-73	-73	-192	-138

MEMBER STRESSES

DECK & CANOPY MEMBERS
D10K

CASE C: LL ON BACK SPAN ONLY

(-) compression

σ_{t_allow} = 3sqrt(f'c) = 39.8 ksf
σ_{c_allow} = 0.45(f'c) = -550.8 ksf

			SERVICE III-CASE C						
Member	Station	Result Case	(P/A) @ Centroid (kips/ft²)	Normal Stress @ Point 1 (kips/ft²)	Normal Stress @ Point 2 (kips/ft²)	Normal Stress @ Point 3 (kips/ft²)	Normal Stress @ Point 4 (kips/ft²)	Normal Stress @ Point 5 (kips/ft²)	Normal Stress @ Point 6 (kips/ft²)
140	0	D10K: D10K: Other PT Losses	-153	-203	-203	-73	-73	-192	-138
140	1	D10K: D10K: Other PT Losses	-152	-206	-206	-65	-65	-195	-136
140	2	D10K: D10K: Other PT Losses	-162	-226	-225	-61	-61	-212	-143
142	0	D10K: D10K: Other PT Losses	-169	-135	-135	-207	-207	-143	-176
142	1	D10K: D10K: Other PT Losses	-159	-132	-132	-189	-189	-138	-165
142	2	D10K: D10K: Other PT Losses	-159	-144	-144	-176	-176	-147	-162
143	0	D10K: D10K: Other PT Losses	-159	-144	-144	-176	-176	-147	-162
143	1	D10K: D10K: Other PT Losses	-159	-164	-164	-154	-154	-163	-158
143	2	D10K: D10K: Other PT Losses	-159	-179	-179	-135	-135	-175	-155
144	0	D10K: D10K: Other PT Losses	-159	-179	-179	-135	-135	-175	-155
144	1	D10K: D10K: Other PT Losses	-159	-193	-192	-116	-116	-185	-152
144	2	D10K: D10K: Other PT Losses	-159	-200	-200	-103	-103	-191	-151
145	0	D10K: D10K: Other PT Losses	-159	-200	-200	-103	-103	-191	-151
145	1	D10K: D10K: Other PT Losses	-159	-199	-199	-102	-103	-190	-151
145	2	D10K: D10K: Other PT Losses	-169	-214	-214	-106	-106	-204	-160
147	0	D10K: D10K: Other PT Losses	-174	-127	-127	-221	-221	-137	-183
147	1	D10K: D10K: Other PT Losses	-163	-127	-127	-198	-198	-135	-170
147	2	D10K: D10K: Other PT Losses	-163	-144	-144	-181	-181	-148	-167
148	0	D10K: D10K: Other PT Losses	-163	-144	-144	-181	-181	-148	-167
148	1	D10K: D10K: Other PT Losses	-163	-169	-169	-154	-154	-168	-162
148	2	D10K: D10K: Other PT Losses	-163	-190	-190	-131	-131	-184	-158
149	0	D10K: D10K: Other PT Losses	-163	-190	-190	-131	-131	-184	-158
149	1	D10K: D10K: Other PT Losses	-163	-209	-209	-110	-111	-199	-154
149	2	D10K: D10K: Other PT Losses	-163	-222	-222	-96	-96	-209	-151
150	0	D10K: D10K: Other PT Losses	-163	-222	-222	-96	-96	-209	-151
150	1	D10K: D10K: Other PT Losses	-163	-224	-223	-94	-95	-210	-150
150	2	D10K: D10K: Other PT Losses	-173	-241	-241	-97	-97	-226	-159
152	0	D10K: D10K: Other PT Losses	-172	-192	-192	-117	-117	-188	-168
152	1	D10K: D10K: Other PT Losses	-161	-180	-180	-115	-115	-176	-158
152	2	D10K: D10K: Other PT Losses	-161	-183	-183	-118	-118	-178	-157
153	0	D10K: D10K: Other PT Losses	-161	-183	-183	-118	-118	-178	-157
153	1	D10K: D10K: Other PT Losses	-161	-184	-184	-128	-128	-179	-157
153	2	D10K: D10K: Other PT Losses	-161	-180	-180	-141	-141	-176	-158
154	0	D10K: D10K: Other PT Losses	-161	-180	-180	-141	-141	-176	-158
154	1	D10K: D10K: Other PT Losses	-161	-173	-173	-148	-148	-171	-159
154	2	D10K: D10K: Other PT Losses	-161	-155	-155	-161	-161	-158	-161
155	0	D10K: D10K: Other PT Losses	-161	-155	-155	-161	-161	-158	-161
155	1	D10K: D10K: Other PT Losses	-161	-145	-145	-168	-168	-150	-162
155	2	D10K: D10K: Other PT Losses	-172	-152	-152	-179	-180	-158	-173
157	0	D10K: D10K: Other PT Losses	-163	-131	-131	-164	-164	-138	-165
157	1	D10K: D10K: Other PT Losses	-151	-123	-123	-153	-153	-129	-153
157	2	D10K: D10K: Other PT Losses	-148	-131	-131	-142	-142	-135	-148
158	0	D10K: D10K: Other PT Losses	-148	-131	-131	-142	-142	-135	-148
158	1	D10K: D10K: Other PT Losses	-148	-185	-185	-102	-102	-176	-140
158	2	D10K: D10K: Other PT Losses	-148	-215	-215	-66	-66	-200	-132
159	0	D10K: D10K: Other PT Losses	-148	-215	-215	-66	-66	-200	-132
159	1	D10K: D10K: Other PT Losses	-144	-180	-180	-78	-78	-173	-132
159	2	D10K: D10K: Other PT Losses	-144	-127	-127	-118	-118	-131	-139

FIGG	Project: FIU	Date: 6/16	Page: / Of
	Project Number: 2262.03 - 1	Designed: ME	
	Description: SUPERSTRUCTURE DESIGN	Checked: EDL	

Check Buckling in Top Chord

MAX Compressive stress = $0.50 f'_c$ (allowable)

$0.5 (8.5 ksi) = 4.25 ksi$

AREA OF TOP Chord = $16.46 ft^2 = 2,370.24 in^2$

$P_{MAX} = (4.25 ksi)(2,370.24 in^2) = 10,073 kips$

$$P_{cr} = \frac{\pi^2 EI}{(Kl)^2}$$

Where: $l_{MAX} = 38.20 ft$ (MAX TOP Chord Span) (CONSERVATIVE)

$E = 688,462 ksf$

$I = 2.69 ft^4$

(Effective Length Factor) $K = 1.0$ Pin-Pin (CONSERVATIVE)

$$P_{cr} = \frac{(3.14159)^2 \left(688,462 \frac{lbs}{ft^2}\right)(2.69 ft^4)}{((1.0)(38.20 ft))^2} = 12,526 \text{ } \cancel{3,987} \text{ kips}$$

NOTE: Check EACH Chord TOV member with the CONCURRENT MAX. LOAD.

Figg Bridge Engineers, Inc.	Project: FIU - Pedestrian Bridge			Creating Bridges as Art
	Designed: MF	Project No.: 2262.03	Sheet: of	
Tallahassee Denver Philadelphia Dallas	Checked: EDL	Date: 20-Jun-16		

Checking Buckling in Canopy (AASHTO LRFD 4.5.3.2.2b-5)

f'c = 8.5 ksi

Top Chord Area = 16.46 ft^2

ϕ= 0.75

Section	Unbraced Length (ft)	K	E (ksf)	I (ft^4)	P_{cr} (kips)	ϕP_{cr} (kips)	STR I Max. Axial Load (kip)	Check
1	38.2	1.4	688463	2.69	6597	4948	3108	OK
2	27.2	1.5	688463	2.69	11213	8410	5494	OK
3	27.2	1.5	688463	2.69	10936	8202	6613	OK
4	27.3	1.5	688463	2.69	10713	8035	6507	OK
5	27.4	1.5	688463	2.69	10750	8063	4951	OK
6	27.5	1.4	688463	2.69	11753	8815	1911	OK

Figg Bridge Engineers, Inc.	Project: FIU - Pedestrian Bridge		Creating Bridges as Art
	Designed: EDL	Project No.: 2262.03	Sheet: of
	Checked:	Date: 20-Jun-16	
Tallahassee Denver Philadelphia Dallas			

CALCULATING EFFECTIVE LENGTH FACTOR, K

(AASHTO LRFD 4.6.2.5-5)

Section	1a	1b	2a	2b	3a	3b	4a	4b	5a	5b	5a	5b	6a	6b
E_{c1} (ksf)	688463	688463	688463	688463	688463	688463	688463	688463	688463	688463	688463	688463	688463	688463
E_{c2} (ksf)	0.00	688463	688463	688463	688463	688463	688463	688463	688463	688463	688463	688463	688463	0
I_{c1} (ft^4)	2.69	2.69	2.69	2.69	2.69	2.69	2.69	2.69	2.69	2.69	2.69	2.69	2.69	2.69
I_{c2} (ft^4)	0.00	2.69	2.69	2.69	2.69	2.69	2.69	2.69	2.69	2.69	2.69	2.69	2.69	0.00
L_{c1} (ft)	38.20	38.20	38.20	27.20	27.20	27.20	27.20	27.30	27.30	27.40	27.30	27.40	27.40	27.50
L_{c2} (ft)	0.00	27.20	27.20	27.20	27.20	27.30	27.30	27.40	27.40	27.50	27.40	27.50	27.50	0.00
E_{g1} (ksf)	688463	688463	688463	688463	688463	688463	688463	688463	688463	688463	688463	688463	688463	688463
E_{g2} (ksf)	0.00	688463	688463	688463	688463	688463	688463	688463	688463	688463	688463	688463	688463	0
E_{g3} (ksf)	0.00	4176000	4176000	4176000	4176000	4176000	4176000	4176000	4176000	4176000	4176000	4176000	4176000	0
I_{g1} (ft^4)	1.17	1.17	1.17	1.17	1.17	1.17	1.17	1.17	1.17	1.17	1.17	1.17	1.17	1.17
I_{g2} (ft^4)	0.00	1.17	1.17	1.17	1.17	1.17	1.17	1.17	1.17	1.17	1.17	1.17	1.17	0.00
I_{g3} (ft^4)	0.00	0.085	0.085	0.085	0.085	0.085	0.085	0.085	0.085	0.085	0.085	0.085	0.085	0.00
L_{g1} (ft)	13.77	35.17	35.17	32.00	32.00	28.21	28.21	23.29	23.29	17.38	23.29	17.38	17.38	13.77
L_{g2} (ft)	0.00	14.54	14.54	13.75	13.75	14.83	14.83	19.46	19.46	23.38	19.46	23.38	23.38	0.00
L_{g3} (ft)	0.00	142.67	142.67	115.54	115.54	88.77	88.77	62.69	62.69	38.10	62.69	38.10	38.10	0.00
G	0.83	1.44	1.44	1.57	1.57	1.56	1.56	1.66	1.66	1.50	1.66	1.50	1.50	1.15
K	1.38		1.48		1.50		1.51		1.50		1.50		1.43	

FIGG	Project FIU	Date 6-20-16	Page / Of
	Project Number 2262.03	Designed EDL	
	Description SUPERSTRUCTURE DESIGN	Checked	

CHECK BUBLING IN CANOPY

CALCULATE EFFECTIVE LENGTH FACTOR, K

SECTION 1

$$G_{55} = \frac{\Sigma (E_c I_c / L_c)}{\Sigma (E_g I_g / L_g)}$$

$E_{c_1} = 688,463\ ksf = E_{c_2}$

$I_{c_1} = 2.69\ ft^4 = I_{c_2}$

$L_{c_1} = 38.2\ ft \quad L_{c_2} = 27.2\ ft$

$E_{g_1} = E_{g_2} = 688,463\ ksf \quad E_{g_3} = 4,176,000\ ksf$

$I_{g_1} = I_{g_2} = 1.17\ ft^4 \quad I_{g_3} = 0.0849\ ft^4$

$L_{g_1} = 34\ ft \quad L_{g_2} = 14.48\ ft \quad L_{g_3} = 142.67\ ft$

$$G_{55} = \frac{(688,463\ k/ft^2 \times 2.69\ ft^4)/38.2\ ft + (688,463\ k/ft^2 \times 2.69\ ft^4)/27.2\ ft}{(688,463\ k/ft^2 \times 1.17\ ft^4)/34\ ft + (688,463\ k/ft^2 \times 1.17\ ft^4)/14.48\ ft + \ldots}$$

$$\ldots (4,176,000\ k/ft^2 \times 0.0849\ ft^4)/142.67\ ft$$

$G_{55} = 1.42$

$$G_{s1} = \frac{E_{c_1} I_{c_1} / L_{c_1}}{E_{g_1} I_{g_1} / L_{g_1}}$$

$E_{c1} = 688,463\ ksf \quad I_{c_1} = 2.69\ ft^4 \quad L_{c_1} = 38.2\ ft$

$E_{g_1} = 688,463\ ksf \quad I_{g_1} = 1.17\ ft^4 \quad L_{g_1} = 13.77\ ft$

$$G_{s1} = \frac{(688,463\ k/ft^2 \times 2.69\ ft^4)/38.2\ ft}{(688,463\ k/ft^2 \times 1.17\ ft^4)/13.77\ ft}$$

$G_{s1} = 0.83$

$$K = 4 - \frac{1}{1+0.26a} - \frac{1}{1+0.26G_B} - \frac{1}{1+0.016aG_b} = 1.38$$ (AASHTO LRFD C4.6.2.5-5)

N_L = number of design lanes as specified in Article 3.6.1.1.1

For skewed bridges, the longitudinal force effects may be reduced by the factor r:

$$r = 1.05 - 0.25\tan\theta \leq 1.00 \qquad (4.6.2.3\text{-}3)$$

where:

θ = skew angle (degrees)

Table 4.6.2.3-1—Typical Schematic Cross-Section

Supporting Components	Type of Deck	Typical Cross-Section
Cast-in-Place Concrete Slab or Voided Slab	Monolithic	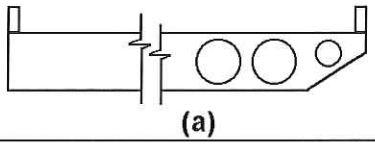 (a)
Stressed Wood Deck	Integral Wood	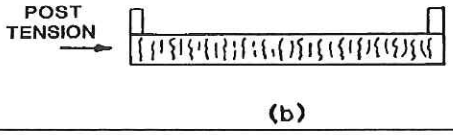 (b)
Glued/Spiked Wood Panels with Spreader Beam	Integral Wood	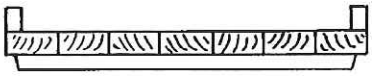 (c)

4.6.2.4—Truss and Arch Bridges

The lever rule may be used for the distribution of gravity loads in trusses and arches when analyzed as planar structures. If a space analysis is used, either the lever rule or direct loading through the deck or deck system may be used.

Where loads, other than the self-weight of the members and wind loads there on, are transmitted to the truss at the panel points, the truss may be analyzed as a pin-connected assembly.

4.6.2.5—Effective Length Factor, *K*

Physical column lengths shall be multiplied by an effective length factor, K, to compensate for rotational and translational boundary conditions other than pinned ends.

In the absence of a more refined analysis, where lateral stability is provided by diagonal bracing or other suitable means, the effective length factor in the braced plane, K, for the compression members in triangulated trusses, trusses, and frames may be taken as:

- For bolted or welded end connections at both ends: $K = 0.750$

C4.6.2.5

Equations for the compressive resistance of columns and moment magnification factors for beam-columns include a factor, K, which is used to modify the length according to the restraint at the ends of the column against rotation and translation.

K is the ratio of the effective length of an idealized pin-end column to the actual length of a column with various other end conditions. KL represents the length between inflection points of a buckled column influenced by the restraint against rotation and translation of column ends. Theoretical values of K, as provided by the

© 2014 by the American Association of State Highway and Transportation Officials.
All rights reserved. Duplication is a violation of applicable law.

- For pinned connections at both ends: $K = 0.875$
- For single angles, regardless of end connection: $K = 1.0$

Vierendeel trusses shall be treated as unbraced frames.

Structural Stability Research Council, are given in Table C4.6.2.5-1 for some idealized column end conditions.

Table C4.6.2.5-1—Effective Length Factors, *K*

Buckled shape of column is shown by dashed line	(a)	(b)	(c) 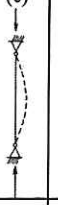	(d)	(e)	(f)
Theoretical K value	0.5	0.7	1.0	1.0	2.0	2.0
Design value of K when ideal conditions are approximated	0.65	0.80	1.0	1.2	2.1	2.0
End condition code	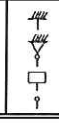	Rotation fixed Rotation free Rotation fixed Rotation free			Translation fixed Translation fixed Translation free Translation free	

Because actual column end conditions seldom comply fully with idealized restraint conditions against rotation and translation, the design values suggested by the Structural Stability Research Council are higher than the idealized values.

Lateral stability of columns in continuous frames, unbraced by attachment to shear walls, diagonal bracing, or adjacent structures, depends on the flexural stiffness of the rigidly connected beams. Therefore, the effective length factor, K, is a function of the total flexural restraint provided by the beams at the ends of the column. If the stiffness of the beams is small in relation to that of the column, the value of K could exceed 2.0.

Single angles are loaded through one leg and are subject to eccentricity and twist, which is often not recognized. K is set equal to 1.0 for these members to more closely match the strength provided in the Guide for Design of Steel Transmission Towers (ASCE Manual No. 52, 1971).

Assuming that only elastic action occurs and that all columns buckle simultaneously, it can be shown that (Chen and Liu, 1991; ASCE Task Committee on Effective Length, 1997):

For braced frames:

$$\frac{G_a G_b}{4}\left(\frac{\pi}{K}\right)^2 + \frac{G_a + G_b}{2}\left(1 - \frac{\frac{\pi}{K}}{tan\left(\frac{\pi}{K}\right)}\right) + \frac{2\tan\left(\frac{\pi}{2K}\right)}{\frac{\pi}{K}} = 1 \quad \text{(C4.6.2.5-1)}$$

© 2014 by the American Association of State Highway and Transportation Officials.
All rights reserved. Duplication is a violation of applicable law.

For unbraced frames:

$$\frac{G_a G_b\left(\frac{\pi}{K}\right)^2 - 36}{6\,(G_a + G_b)} = \frac{\frac{\pi}{K}}{\tan\left(\frac{\pi}{K}\right)} \qquad \text{(C4.6.2.5-2)}$$

where subscripts a and b refer to the two ends of the column under consideration

in which:

$$G = \frac{\Sigma\left(\frac{E_c I_c}{L_c}\right)}{\Sigma\left(\frac{E_g I_g}{L_g}\right)} \qquad \text{(C4.6.2.5-3)}$$

where:

Σ = summation of the properties of components rigidly connected to an end of the column in the plane of flexure
E_c = modulus of elasticity of column (ksi)
I_c = moment of inertia of column (in.^{4})
L_c = unbraced length of column (in.)
E_g = modulus of elasticity of beam or other restraining member (ksi)
I_g = moment of inertia of beam or other restraining member (in.^{4})
L_g = unsupported length of beam or other restraining member (in.)
K = effective length factor for the column under consideration

Figures C4.6.2.5-1 and C4.6.2.5-2 are graphical representations of the relationship among K, G_a, and G_b for Eqs. C4.6.2.5-1 and C4.6.2.5-2, respectively. The figures can be used to obtain values of K directly.

Eqs. C4.6.2.5-1, C4.6.2.5-2, and the alignment charts in Figures C4.6.2.5-1 and C4.6.2.5-2 are based on assumptions of idealized conditions. The development of the chart and formula can be found in textbooks such as Salmon and Johnson (1990) and Chen and Lui (1991). When actual conditions differ significantly from these idealized assumptions, unrealistic designs may result. Galambos (1988), Yura (1971), Disque (1973), Duan and Chen (1988), and AISC (1993) may be used to evaluate end conditions more accurately.

© 2014 by the American Association of State Highway and Transportation Officials.
All rights reserved. Duplication is a violation of applicable law.

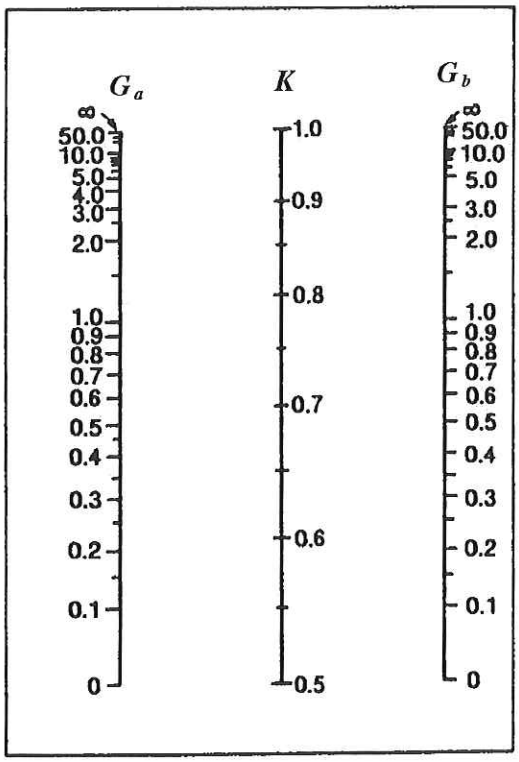

Figure C4.6.2.5-1—Alignment Chart for Determining Effective Length Factor, *K*, for Braced Frames

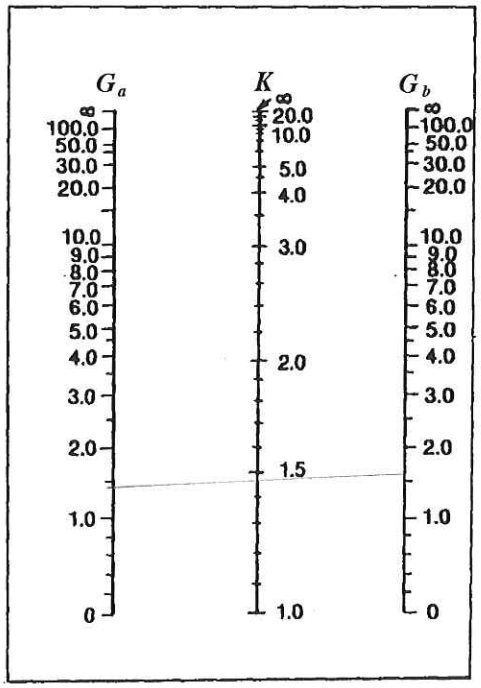

Figure C4.6.2.5-2—Alignment Chart for Determining Effective Length Factor, *K*, for Unbraced Frames

© 2014 by the American Association of State Highway and Transportation Officials.
All rights reserved. Duplication is a violation of applicable law.

The following applies to the use of Figures C4.6.2.5-1 and C4.6.2.5-2:

- For column ends supported by but not rigidly connected to a footing or foundation, G is theoretically equal to infinity, but unless actually designed as a true frictionless pin, may be taken equal to 10 for practical design. If the column end is rigidly attached to a properly designed footing, G may be taken equal to 1.0. Smaller values may be taken if justified by analysis.
- In computing effective length factors for members with monolithic connections, it is important to properly evaluate the degree of fixity in the foundation using engineering judgment. In absence of a more refined analysis, the following values can be used:

Condition	G
Footing anchored on rock	1.5
Footing not anchored on rock	3.0
Footing on soil	5.0
Footing on multiple rows of end bearing piles	1.0

In lieu of the alignment charts, the following alternative K-factor equations (Duan, King, and Chen, 1993) may be used.

For braced frames:

$$K = 1 - \frac{1}{5+9G_a} - \frac{1}{5+9G_b} - \frac{1}{10+G_aG_b} \qquad \text{(C4.6.2.5-4)}$$

For unbraced frames:

- For $K < 2$

$$K = 4 - \frac{1}{1+0.2G_a} - \frac{1}{1+0.2G_b} - \frac{1}{1+0.01G_aG_b} \qquad \text{(C4.6.2.5-5)}$$

- For $K \geq 2$

$$K = \frac{2\pi a}{0.9+\sqrt{0.81+4ab}} \qquad \text{(C4.6.2.5-6)}$$

in which:

$$a = \frac{G_aG_b}{G_a+G_b} + 3 \qquad \text{(C4.6.2.5-7)}$$

$$b = \frac{36}{G_a+G_b} + 6 \qquad \text{(C4.6.2.5-8)}$$

© 2014 by the American Association of State Highway and Transportation Officials.
All rights reserved. Duplication is a violation of applicable law.

Eq. C4.6.2.5-5 is used first. If the value of K calculated by Eq. C4.6.2.5-5 is greater than 2, Eq. C4.6.2.5-6 is used. The values for K calculated using Eqs. C4.6.2.5-5 and C4.6.2.5-6 are a good fit with results from the alignment chart Eqs. C4.6.2.5-1, C4.6.2.5-2, C4.6.2.5-3, and allow an Engineer to perform a direct noniterative solution for K.

4.6.2.6—Effective Flange Width

4.6.2.6.1—General

Unless specified otherwise in this Article or in Articles 4.6.2.6.2, 4.6.2.6.3, or 4.6.2.6.5, the effective flange width of a concrete deck slab in composite or monolithic construction may be taken as the tributary width perpendicular to the axis of the member for determining cross-section stiffnesses for analysis and for determining flexural resistances. The effective flange width of orthotropic steel decks shall be as specified in Article 4.6.2.6.4. For the calculation of live load deflections, where required, the provisions of Article 2.5.2.6.2 shall apply.

Where a structurally continuous concrete barrier is present and is included in the structural analysis as permitted in Article 4.5.1, the deck slab overhang width used for the analysis as well as for checking the composite girder resistance may be extended by:

$$\Delta w = \frac{A_b}{2t_s} \tag{4.6.2.6.1-1}$$

where:

A_b = cross-sectional area of the barrier (in.^{2})
t_s = thickness of deck slab (in.)

The slab effective flange width in composite girder and/or stringer systems or in the chords of composite deck trusses may be taken as one-half the distance to the adjacent stringer or girder on each side of the component, or one-half the distance to the adjacent stringer or girder plus the full overhang width. Otherwise, the slab effective flange width should be determined by a refined analysis when:

- the composite or monolithic member cross-section is subjected to significant combined axial force and bending, with the exception that forces induced by restraint of thermal expansion may be determined in beam-slab systems using the slab tributary width,
- the largest skew angle θ in the bridge system is greater than 75 degrees, where θ is the angle of a bearing line measured relative to a normal to the centerline of a longitudinal component,

C4.6.2.6.1

Longitudinal stresses are distributed across the deck of composite and monolithic flexural members by in-plane shear stresses. Due to the corresponding shear deformations, plane sections do not remain plane and the longitudinal stresses across the deck are not uniform. This phenomenon is referred to as shear lag. The effective flange width is the width of the deck over which the assumed uniformly distributed longitudinal stresses result approximately in the same deck force and member moments calculated from elementary beam theory assuming plane sections remain plane, as are produced by the nonuniform stress distribution.

The provisions of this Article apply to all longitudinal flexural members composite or monolithic with a deck slab, including girders and stringers. They are based on finite element studies of various bridge types and configurations, corroborated by experimental tests, and sensitivity analysis of various candidate regression equations (Chen et al., 2005). Chen et al. (2005) found that bridges with larger L/S (ratio of span length to girder spacing) consistently exhibited an effective width b_e equal to the tributary width b. Nonskewed bridges with $L/S = 3.1$, the smallest value of L/S considered in the Chen et al. (2005) study, exhibited $b_e = b$ in the maximum positive bending regions and approximately $b_e = 0.9b$ in the maximum negative bending regions under service limit state conditions. However, they exhibited $b_e = b$ in these regions in all cases at the strength limit state. Bridges with large skew angles often exhibited $b_e < b$ in both the maximum positive and negative moment regions, particularly in cases with small L/S. However, when various potential provisions were assessed using the Rating Factor (RF) as a measure of impact, the influence of using full width ($b_e = b$) was found to be minimal. Therefore, the use of the tributary width is justified in all cases within the limits specified in this Article. The Chen et al. (2005) study demonstrated that there is no significant relationship between the slab effective width and the slab thickness, as implied by previous Specifications.

These provisions are considered applicable for skew angles less than or equal to 75 degrees, L/S greater than or equal to 2.0 and overhang widths less than or equal to $0.5S$. In unusual cases where these limits are violated, a refined analysis should be used to determine the slab effective width. Furthermore, these provisions are considered applicable for slab-beam bridges with

© 2014 by the American Association of State Highway and Transportation Officials.
All rights reserved. Duplication is a violation of applicable law.

Figg Bridge Engineers, Inc.	Project: FIU - Pedestrian Bridge			Creating
	Designed: MF	Project No.: 2262.03	Sheet: of	Bridges
Tallahassee Denver Philadelphia Dallas	Checked	Date: 20-Jun-16		as Art

TOP CHORD BUCKLING ANALYSIS
DL + PT + DW

Section	Member	Joint	Result Case	Force X (kips)	Force Y (kips)	Force Z (kips)	Moment X (kips-ft)	Moment Y (kips-ft)	Moment Z (kips-ft)
1	51	51	D10K: D10K: No Activity	51	0	57	0	-290	0
	51	52	D10K: D10K: No Activity	-2449	0	-39	0	164	0
	52	52	D10K: D10K: No Activity	2449	0	39	0	-164	0
	52	53	D10K: D10K: No Activity	-2455	0	-12	0	-117	0
	53	53	D10K: D10K: No Activity	2455	0	12	0	117	0
	53	54	D10K: D10K: No Activity	-2460	0	15	0	-103	0
	54	54	D10K: D10K: No Activity	2460	0	-15	0	103	0
	54	55	D10K: D10K: No Activity	-2463	0	35	0	75	0
2	55	55	D10K: D10K: No Activity	3916	0	36	0	-69	0
	55	56	D10K: D10K: No Activity	-3918	0	-19	0	-82	0
	56	56	D10K: D10K: No Activity	3918	0	20	0	82	0
	56	57	D10K: D10K: No Activity	-3922	0	2	0	-147	0
	57	57	D10K: D10K: No Activity	3922	0	-2	0	147	0
	57	58	D10K: D10K: No Activity	-3926	0	23	0	-45	0
	58	58	D10K: D10K: No Activity	3926	0	-23	0	45	0
	58	59	D10K: D10K: No Activity	-3928	0	37	0	115	0
3	59	59	D10K: D10K: No Activity	4633	0	28	0	36	0
	59	60	D10K: D10K: No Activity	-4635	0	-11	0	-142	0
	60	60	D10K: D10K: No Activity	4635	0	11	0	142	0
	60	61	D10K: D10K: No Activity	-4639	0	11	0	-140	0
	61	61	D10K: D10K: No Activity	4639	0	-10	0	140	0
	61	62	D10K: D10K: No Activity	-4643	0	31	0	29	0
	62	62	D10K: D10K: No Activity	4643	0	-31	0	-29	0
	62	63	D10K: D10K: No Activity	-4646	0	45	0	234	-1
4	63	63	D10K: D10K: No Activity	4614	0	28	0	-5	1
	63	64	D10K: D10K: No Activity	-4616	0	-11	0	-102	-1
	64	64	D10K: D10K: No Activity	4616	0	11	0	102	1
	64	65	D10K: D10K: No Activity	-4620	0	10	0	-104	-1
	65	65	D10K: D10K: No Activity	4620	0	-10	0	104	1
	65	66	D10K: D10K: No Activity	-4624	0	30	0	62	-1
	66	66	D10K: D10K: No Activity	4624	0	-30	0	-62	1
	66	67	D10K: D10K: No Activity	-4626	0	45	0	266	-1
5	67	67	D10K: D10K: No Activity	3705	0	39	0	-134	1
	67	68	D10K: D10K: No Activity	-3706	0	-22	0	-31	-1
	68	68	D10K: D10K: No Activity	3706	0	22	0	31	1
	68	69	D10K: D10K: No Activity	-3706	0	-1	0	-121	-1
	69	69	D10K: D10K: No Activity	3706	0	1	0	121	1
	69	70	D10K: D10K: No Activity	-3707	0	20	0	-43	-1
	70	70	D10K: D10K: No Activity	3707	0	-20	0	43	1
	70	71	D10K: D10K: No Activity	-3708	0	35	0	105	-1
6	71	71	D10K: D10K: No Activity	1843	0	21	0	5	1
	71	72	D10K: D10K: No Activity	-1844	0	-4	0	-71	-1
	72	72	D10K: D10K: No Activity	1844	0	4	0	71	1
	72	73	D10K: D10K: No Activity	-1841	0	17	0	-15	-1
	73	73	D10K: D10K: No Activity	1841	0	-17	0	15	1
	73	74	D10K: D10K: No Activity	-1837	0	38	0	211	-1
	74	74	D10K: D10K: No Activity	1837	0	-38	0	-211	1
	74	75	D10K: D10K: No Activity	-329	0	51	0	225	-1

Figg Bridge Engineers, Inc.	Project: FIU - Pedestrian Bridge			Creating
	Designed: MF	Project No.: 2262.03	Sheet: of	Bridges
Tallahassee Denver Philadelphia Dallas	Checked	Date: 20-Jun-16		as Art

TOP CHORD BUCKLING ANALYSIS
LL DECK

Section	Member	Joint	Result Case	Force X (kips)	Force Y (kips)	Force Z (kips)	Moment X (kips-ft)	Moment Y (kips-ft)	Moment Z (kips-ft)
1	51	51	Load Cases: LL2_Deck	13	0	4	0	-74	0
	51	52	Load Cases: LL2_Deck	-13	0	-4	0	46	0
	52	52	Load Cases: LL2_Deck	13	0	4	0	-46	0
	52	53	Load Cases: LL2_Deck	-13	0	-4	0	4	0
	53	53	Load Cases: LL2_Deck	13	0	4	0	-4	0
	53	54	Load Cases: LL2_Deck	-13	0	-4	0	-38	0
	54	54	Load Cases: LL2_Deck	13	0	4	0	38	0
	54	55	Load Cases: LL2_Deck	-13	0	-4	0	-66	0
2	55	55	Load Cases: LL2_Deck	262	0	1	0	0	0
	55	56	Load Cases: LL2_Deck	-262	0	-1	0	-6	0
	56	56	Load Cases: LL2_Deck	262	0	1	0	6	0
	56	57	Load Cases: LL2_Deck	-262	0	-1	0	-16	0
	57	57	Load Cases: LL2_Deck	262	0	1	0	16	0
	57	58	Load Cases: LL2_Deck	-262	0	-1	0	-25	0
	58	58	Load Cases: LL2_Deck	262	0	1	0	25	0
	58	59	Load Cases: LL2_Deck	-262	0	-1	0	-31	0
3	59	59	Load Cases: LL2_Deck	375	0	-1	0	23	0
	59	60	Load Cases: LL2_Deck	-375	0	1	0	-18	0
	60	60	Load Cases: LL2_Deck	375	0	-1	0	18	0
	60	61	Load Cases: LL2_Deck	-375	0	1	0	-12	0
	61	61	Load Cases: LL2_Deck	375	0	-1	0	12	0
	61	62	Load Cases: LL2_Deck	-375	0	1	0	-5	0
	62	62	Load Cases: LL2_Deck	375	0	-1	0	5	0
	62	63	Load Cases: LL2_Deck	-375	0	1	0	0	0
4	63	63	Load Cases: LL2_Deck	362	0	-1	0	20	0
	63	64	Load Cases: LL2_Deck	-362	0	1	0	-14	0
	64	64	Load Cases: LL2_Deck	362	0	-1	0	14	0
	64	65	Load Cases: LL2_Deck	-362	0	1	0	-5	0
	65	65	Load Cases: LL2_Deck	362	0	-1	0	5	0
	65	66	Load Cases: LL2_Deck	-362	0	1	0	3	0
	66	66	Load Cases: LL2_Deck	362	0	-1	0	-3	0
	66	67	Load Cases: LL2_Deck	-362	0	1	0	9	0
5	67	67	Load Cases: LL2_Deck	213	0	0	0	4	0
	67	68	Load Cases: LL2_Deck	-213	0	0	0	-5	0
	68	68	Load Cases: LL2_Deck	213	0	0	0	5	0
	68	69	Load Cases: LL2_Deck	-213	0	0	0	-7	0
	69	69	Load Cases: LL2_Deck	213	0	0	0	7	0
	69	70	Load Cases: LL2_Deck	-213	0	0	0	-9	0
	70	70	Load Cases: LL2_Deck	213	0	0	0	9	0
	70	71	Load Cases: LL2_Deck	-213	0	0	0	-10	0
6	71	71	Load Cases: LL2_Deck	-44	0	-2	0	23	0
	71	72	Load Cases: LL2_Deck	44	0	2	0	-10	0
	72	72	Load Cases: LL2_Deck	-44	0	-2	0	10	0
	72	73	Load Cases: LL2_Deck	44	0	2	0	8	0
	73	73	Load Cases: LL2_Deck	-44	0	-2	0	-8	0
	73	74	Load Cases: LL2_Deck	44	0	2	0	27	0
	74	74	Load Cases: LL2_Deck	-44	0	-2	0	-27	0
	74	75	Load Cases: LL2_Deck	44	0	2	0	39	0

Figg Bridge Engineers, Inc.	Project: FIU - Pedestrian Bridge			Creating Bridges as Art
Tallahassee Denver Philadelphia Dallas	Designed: MF	Project No.: 2262.03	Sheet: of	
	Checked:	Date: 20-Jun-16		

TOP CHORD BUCKLING ANALYSIS
LL CANOPY

Section	Member	Joint	Result Case	Force X (kips)	Force Y (kips)	Force Z (kips)	Moment X (kips-ft)	Moment Y (kips-ft)	Moment Z (kips-ft)
1	51	51	Load Cases: LL2_Roof	3	0	6	0	-26	0
	51	52	Load Cases: LL2_Roof	-3	0	-3	0	-7	0
	52	52	Load Cases: LL2_Roof	3	0	3	0	7	0
	52	53	Load Cases: LL2_Roof	-3	0	0	0	-24	0
	53	53	Load Cases: LL2_Roof	3	0	0	0	24	0
	53	54	Load Cases: LL2_Roof	-3	0	4	0	-4	0
	54	54	Load Cases: LL2_Roof	3	0	-4	0	4	0
	54	55	Load Cases: LL2_Roof	-3	0	6	0	32	0
2	55	55	Load Cases: LL2_Roof	33	0	5	0	-28	0
	55	56	Load Cases: LL2_Roof	-33	0	-3	0	6	0
	56	56	Load Cases: LL2_Roof	33	0	3	0	-6	0
	56	57	Load Cases: LL2_Roof	-33	0	-1	0	-9	0
	57	57	Load Cases: LL2_Roof	33	0	1	0	9	0
	57	58	Load Cases: LL2_Roof	-33	0	2	0	-2	0
	58	58	Load Cases: LL2_Roof	33	0	-2	0	2	0
	58	59	Load Cases: LL2_Roof	-33	0	4	0	14	0
3	59	59	Load Cases: LL2_Roof	45	0	4	0	-16	0
	59	60	Load Cases: LL2_Roof	-45	0	-2	0	-2	0
	60	60	Load Cases: LL2_Roof	45	0	2	0	2	0
	60	61	Load Cases: LL2_Roof	-45	0	0	0	-12	0
	61	61	Load Cases: LL2_Roof	45	0	0	0	12	0
	61	62	Load Cases: LL2_Roof	-45	0	3	0	0	0
	62	62	Load Cases: LL2_Roof	45	0	-3	0	0	0
	62	63	Load Cases: LL2_Roof	-45	0	5	0	20	0
4	63	63	Load Cases: LL2_Roof	42	0	4	0	-18	0
	63	64	Load Cases: LL2_Roof	-42	0	-3	0	-1	0
	64	64	Load Cases: LL2_Roof	42	0	3	0	1	0
	64	65	Load Cases: LL2_Roof	-42	0	0	0	-11	0
	65	65	Load Cases: LL2_Roof	42	0	0	0	11	0
	65	66	Load Cases: LL2_Roof	-42	0	3	0	1	0
	66	66	Load Cases: LL2_Roof	42	0	-3	0	-1	0
	66	67	Load Cases: LL2_Roof	-42	0	4	0	21	0
5	67	67	Load Cases: LL2_Roof	23	0	4	0	-19	0
	67	68	Load Cases: LL2_Roof	-23	0	-3	0	0	0
	68	68	Load Cases: LL2_Roof	23	0	3	0	0	0
	68	69	Load Cases: LL2_Roof	-23	0	0	0	-11	0
	69	69	Load Cases: LL2_Roof	23	0	0	0	11	0
	69	70	Load Cases: LL2_Roof	-23	0	3	0	0	0
	70	70	Load Cases: LL2_Roof	23	0	-3	0	0	0
	70	71	Load Cases: LL2_Roof	-23	0	4	0	19	0
6	71	71	Load Cases: LL2_Roof	-4	0	4	0	-17	0
	71	72	Load Cases: LL2_Roof	4	0	-2	0	-1	0
	72	72	Load Cases: LL2_Roof	-4	0	2	0	1	0
	72	73	Load Cases: LL2_Roof	4	0	0	0	-9	0
	73	73	Load Cases: LL2_Roof	-4	0	0	0	9	0
	73	74	Load Cases: LL2_Roof	4	0	3	0	4	0
	74	74	Load Cases: LL2_Roof	-4	0	-3	0	-4	0
	74	75	Load Cases: LL2_Roof	4	0	5	0	25	0

Figg Bridge Engineers, Inc.	Project: FIU - Pedestrian Bridge			Creating Bridges as Art
Tallahassee Denver Philadelphia Dallas	Designed: MF	Project No.: 2262.03	Sheet: of	
	Checked:	Date: 20-Jun-16		

TOP CHORD BUCKLING ANALYSIS
TU

Section	Member	Joint	Result Case	Force X (kips)	Force Y (kips)	Force Z (kips)	Moment X (kips-ft)	Moment Y (kips-ft)	Moment Z (kips-ft)
1	51	51	TU+Temp. Diff.	11	0	4	0	-73	0
	51	52	TU+Temp. Diff.	-11	0	-4	0	45	0
	52	52	TU+Temp. Diff.	11	0	4	0	-45	0
	52	53	TU+Temp. Diff.	-11	0	-4	0	3	0
	53	53	TU+Temp. Diff.	11	0	4	0	-3	0
	53	54	TU+Temp. Diff.	-11	0	-4	0	-39	0
	54	54	TU+Temp. Diff.	11	0	4	0	39	0
	54	55	TU+Temp. Diff.	-11	0	-4	0	-67	0
2	55	55	TU+Temp. Diff.	139	0	2	0	-10	0
	55	56	TU+Temp. Diff.	-139	0	-2	0	0	0
	56	56	TU+Temp. Diff.	139	0	2	0	0	0
	56	57	TU+Temp. Diff.	-139	0	-2	0	-15	0
	57	57	TU+Temp. Diff.	139	0	2	0	15	0
	57	58	TU+Temp. Diff.	-139	0	-2	0	-30	0
	58	58	TU+Temp. Diff.	139	0	2	0	30	0
	58	59	TU+Temp. Diff.	-139	0	-2	0	-39	0
3	59	59	TU+Temp. Diff.	150	0	0	0	15	0
	59	60	TU+Temp. Diff.	-150	0	0	0	-14	0
	60	60	TU+Temp. Diff.	150	0	0	0	14	0
	60	61	TU+Temp. Diff.	-150	0	0	0	-11	0
	61	61	TU+Temp. Diff.	150	0	0	0	11	0
	61	62	TU+Temp. Diff.	-150	0	0	0	-9	0
	62	62	TU+Temp. Diff.	150	0	0	0	9	0
	62	63	TU+Temp. Diff.	-150	0	0	0	-7	0
4	63	63	TU+Temp. Diff.	42	0	-1	0	15	0
	63	64	TU+Temp. Diff.	-42	0	1	0	-10	0
	64	64	TU+Temp. Diff.	42	0	-1	0	10	0
	64	65	TU+Temp. Diff.	-42	0	1	0	-3	0
	65	65	TU+Temp. Diff.	42	0	-1	0	3	0
	65	66	TU+Temp. Diff.	-42	0	1	0	4	0
	66	66	TU+Temp. Diff.	42	0	-1	0	-4	0
	66	67	TU+Temp. Diff.	-42	0	1	0	8	0
5	67	67	TU+Temp. Diff.	-190	0	1	0	2	0
	67	68	TU+Temp. Diff.	190	0	-1	0	-5	0
	68	68	TU+Temp. Diff.	-190	0	1	0	5	0
	68	69	TU+Temp. Diff.	190	0	-1	0	-10	0
	69	69	TU+Temp. Diff.	-190	0	1	0	10	0
	69	70	TU+Temp. Diff.	190	0	-1	0	-14	0
	70	70	TU+Temp. Diff.	-190	0	1	0	14	0
	70	71	TU+Temp. Diff.	190	0	-1	0	-17	0
6	71	71	TU+Temp. Diff.	-620	0	-5	0	48	0
	71	72	TU+Temp. Diff.	620	0	5	0	-21	0
	72	72	TU+Temp. Diff.	-620	0	-5	0	21	0
	72	73	TU+Temp. Diff.	620	0	5	0	20	0
	73	73	TU+Temp. Diff.	-620	0	-5	0	-20	0
	73	74	TU+Temp. Diff.	620	0	5	0	61	0
	74	74	TU+Temp. Diff.	-620	0	-5	0	-61	0
	74	75	TU+Temp. Diff.	620	0	5	0	88	0

Figg Bridge Engineers, Inc.	Project: FIU - Pedestrian Bridge			Creating Bridges as Art
Tallahassee Denver Philadelphia Dallas	Designed: MF	Project No.: 2262.03	Sheet: of	
	Checked	Date: 20-Jun-16		

TOP CHORD BUCKLING ANALYSIS
STRENGTH I LOAD COMBINATION

Section	Member	Joint	Result Case	Force X (kips)	Force Y (kips)	Force Z (kips)	Moment X (kips-ft)	Moment Y (kips-ft)	Moment Z (kips-ft)
1	51	51	STR I	96	0	90	0	-574	0
	51	52	STR I	-3095	0	-64	0	295	0
	52	52	STR I	3095	0	64	0	-295	0
	52	53	STR I	-3101	0	-24	0	-181	0
	53	53	STR I	3101	0	24	0	181	0
	53	54	STR I	-3108	0	16	0	-221	0
	54	54	STR I	3108	0	-16	0	221	0
	54	55	STR I	-3112	0	46	0	0	0
2	55	55	STR I	5481	0	57	0	-139	0
	55	56	STR I	-5484	0	-33	0	-104	0
	56	56	STR I	5484	0	33	0	104	0
	56	57	STR I	-5489	0	-1	0	-234	0
	57	57	STR I	5489	0	1	0	234	0
	57	58	STR I	-5494	0	29	0	-118	0
	58	58	STR I	5494	0	-29	0	118	0
	58	59	STR I	-5497	0	50	0	94	0
3	59	59	STR I	6601	0	41	0	66	0
	59	60	STR I	-6604	0	-17	0	-221	-1
	60	60	STR I	6604	0	16	0	221	1
	60	61	STR I	-6609	0	15	0	-221	-1
	61	61	STR I	6609	0	-15	0	221	1
	61	62	STR I	-6613	0	45	0	24	-1
	62	62	STR I	6613	0	-45	0	-24	1
	62	63	STR I	-6617	0	66	0	323	-1
4	63	63	STR I	6495	0	40	0	4	1
	63	64	STR I	-6498	0	-16	0	-158	-1
	64	64	STR I	6498	0	16	0	158	1
	64	65	STR I	-6503	0	15	0	-159	-1
	65	65	STR I	6503	0	-15	0	159	1
	65	66	STR I	-6507	0	45	0	87	-1
	66	66	STR I	6507	0	-45	0	-87	1
	66	67	STR I	-6509	0	67	0	389	-1
5	67	67	STR I	4949	0	57	0	-194	1
	67	68	STR I	-4950	0	-33	0	-50	-1
	68	68	STR I	4950	0	32	0	50	1
	68	69	STR I	-4950	0	-2	0	-187	-2
	69	69	STR I	4950	0	2	0	187	2
	69	70	STR I	-4951	0	28	0	-76	-2
	70	70	STR I	4951	0	-28	0	76	2
	70	71	STR I	-4952	0	51	0	139	-2
6	71	71	STR I	1911	0	27	0	40	2
	71	72	STR I	-1911	0	-2	0	-119	-2
	72	72	STR I	1911	0	2	0	119	2
	72	73	STR I	-1909	0	28	0	-11	-2
	73	73	STR I	1909	0	-28	0	11	2
	73	74	STR I	-1903	0	58	0	348	-2
	74	74	STR I	1903	0	-58	0	-348	2
	74	75	STR I	-19	0	79	0	437	-2

MEMBER STRESSES

DIAGONAL MEMBERS

Main Span Erection - Supports at First Nodal Zones from Both Ends

Member No.	LARSA Member	MEMBER STRESS (ksf)
2	705	122
3	708	-23
4	711	-152
5	714	93
6	717	19
7	720	95
8	723	191
9	726	-117
10	729	-53
11	732	160

			SELWEIGHT (DC)				
Member	Station	Result Case	(P/A) @ Centroid (kips/ft²)	Normal Stress @ Point 1 (kips/ft²)	Normal Stress @ Point 2 (kips/ft²)	Normal Stress @ Point 3 (kips/ft²)	Normal Stress @ Point 4 (kips/ft²)
705	0	Stage 2: Stage 2: Stress Canopy PT	79.87	93.68	66.07	66.07	93.68
705	1	Stage 2: Stage 2: Stress Canopy PT	80.78	72.15	89.41	89.41	72.15
705	2	Stage 2: Stage 2: Stress Canopy PT	81.68	108.44	54.93	54.93	108.44
708	0	Stage 2: Stage 2: Stress Canopy PT	-94.12	-118.01	-70.22	-70.22	-118.01
708	1	Stage 2: Stage 2: Stress Canopy PT	-93.33	-111.71	-74.95	-74.95	-111.71
708	2	Stage 2: Stage 2: Stress Canopy PT	-92.55	-101.35	-83.75	-83.75	-101.35
711	0	Stage 2: Stage 2: Stress Canopy PT	-184.01	-155.23	-212.79	-212.79	-155.23
711	1	Stage 2: Stage 2: Stress Canopy PT	-183.11	-207.06	-159.15	-159.15	-207.06
711	2	Stage 2: Stage 2: Stress Canopy PT	-182.20	-187.22	-177.19	-177.19	-187.22
714	0	Stage 2: Stage 2: Stress Canopy PT	60.89	-33.34	155.12	155.12	-33.34
714	1	Stage 2: Stage 2: Stress Canopy PT	61.78	47.90	75.66	75.66	47.90
714	2	Stage 2: Stage 2: Stress Canopy PT	62.67	129.38	-4.05	-4.05	129.38
717	0	Stage 2: Stage 2: Stress Canopy PT	-11.32	-37.81	15.16	15.16	-37.81
717	1	Stage 2: Stage 2: Stress Canopy PT	-10.42	-43.19	22.36	22.36	-43.19
717	2	Stage 2: Stage 2: Stress Canopy PT	-9.51	6.12	-25.14	-25.14	6.12
720	0	Stage 2: Stage 2: Stress Canopy PT	-20.84	-83.91	42.23	42.23	-83.91
720	1	Stage 2: Stage 2: Stress Canopy PT	-19.91	-30.78	-9.03	-9.03	-30.78
720	2	Stage 2: Stage 2: Stress Canopy PT	-18.97	29.47	-67.41	-67.41	29.47
723	0	Stage 2: Stage 2: Stress Canopy PT	143.01	148.15	137.88	137.88	148.15
723	1	Stage 2: Stage 2: Stress Canopy PT	143.93	139.20	148.65	148.65	139.20
723	2	Stage 2: Stage 2: Stress Canopy PT	144.84	166.39	123.29	123.29	166.39
726	0	Stage 2: Stage 2: Stress Canopy PT	-152.21	-137.95	-166.46	-166.46	-137.95
726	1	Stage 2: Stage 2: Stress Canopy PT	-151.30	-158.11	-144.48	-144.48	-158.11
726	2	Stage 2: Stage 2: Stress Canopy PT	-150.39	-156.98	-143.80	-143.80	-156.98
729	0	Stage 2: Stage 2: Stress Canopy PT	-96.69	-71.31	-122.07	-122.07	-71.31
729	1	Stage 2: Stage 2: Stress Canopy PT	-95.76	-95.21	-96.30	-96.30	-95.21
729	2	Stage 2: Stage 2: Stress Canopy PT	-94.82	-101.63	-88.02	-88.02	-101.63
732	0	Stage 2: Stage 2: Stress Canopy PT	88.35	57.25	119.46	119.46	57.25
732	1	Stage 2: Stage 2: Stress Canopy PT	89.23	69.06	109.41	109.41	69.06
732	2	Stage 2: Stage 2: Stress Canopy PT	90.11	130.03	50.19	50.19	130.03

			CREEP (CR)				
Member	Station	Result Case	(P/A) @ Centroid (kips/ft²)	Normal Stress @ Point 1 (kips/ft²)	Normal Stress @ Point 2 (kips/ft²)	Normal Stress @ Point 3 (kips/ft²)	Normal Stress @ Point 4 (kips/ft²)
705	0	Stage 2: Stage 2: Stress Canopy PT	0.00	0.00	0.00	0.00	0.00
705	1	Stage 2: Stage 2: Stress Canopy PT	0.00	0.00	0.00	0.00	0.00
705	2	Stage 2: Stage 2: Stress Canopy PT	0.00	0.00	0.00	0.00	0.00
708	0	Stage 2: Stage 2: Stress Canopy PT	0.00	0.00	0.00	0.00	0.00
708	1	Stage 2: Stage 2: Stress Canopy PT	0.00	0.00	0.00	0.00	0.00
708	2	Stage 2: Stage 2: Stress Canopy PT	0.00	0.00	0.00	0.00	0.00
711	0	Stage 2: Stage 2: Stress Canopy PT	0.00	0.00	0.00	0.00	0.00
711	1	Stage 2: Stage 2: Stress Canopy PT	0.00	0.00	0.00	0.00	0.00
711	2	Stage 2: Stage 2: Stress Canopy PT	0.00	0.00	0.00	0.00	0.00
714	0	Stage 2: Stage 2: Stress Canopy PT	0.00	0.00	0.00	0.00	0.00
714	1	Stage 2: Stage 2: Stress Canopy PT	0.00	0.00	0.00	0.00	0.00
714	2	Stage 2: Stage 2: Stress Canopy PT	0.00	0.00	0.00	0.00	0.00
717	0	Stage 2: Stage 2: Stress Canopy PT	0.00	0.00	0.00	0.00	0.00
717	1	Stage 2: Stage 2: Stress Canopy PT	0.00	0.00	0.00	0.00	0.00
717	2	Stage 2: Stage 2: Stress Canopy PT	0.00	0.00	0.00	0.00	0.00
720	0	Stage 2: Stage 2: Stress Canopy PT	0.00	0.00	0.00	0.00	0.00
720	1	Stage 2: Stage 2: Stress Canopy PT	0.00	0.00	0.00	0.00	0.00
720	2	Stage 2: Stage 2: Stress Canopy PT	0.00	0.00	0.00	0.00	0.00
723	0	Stage 2: Stage 2: Stress Canopy PT	0.00	0.00	0.00	0.00	0.00
723	1	Stage 2: Stage 2: Stress Canopy PT	0.00	0.00	0.00	0.00	0.00
723	2	Stage 2: Stage 2: Stress Canopy PT	0.00	0.00	0.00	0.00	0.00
726	0	Stage 2: Stage 2: Stress Canopy PT	0.00	0.00	0.00	0.00	0.00
726	1	Stage 2: Stage 2: Stress Canopy PT	0.00	0.00	0.00	0.00	0.00
726	2	Stage 2: Stage 2: Stress Canopy PT	0.00	0.00	0.00	0.00	0.00
729	0	Stage 2: Stage 2: Stress Canopy PT	0.00	0.00	0.00	0.00	0.00
729	1	Stage 2: Stage 2: Stress Canopy PT	0.00	0.00	0.00	0.00	0.00
729	2	Stage 2: Stage 2: Stress Canopy PT	0.00	0.00	0.00	0.00	0.00
732	0	Stage 2: Stage 2: Stress Canopy PT	0.00	0.00	0.00	0.00	0.00
732	1	Stage 2: Stage 2: Stress Canopy PT	0.00	0.00	0.00	0.00	0.00
732	2	Stage 2: Stage 2: Stress Canopy PT	0.00	0.00	0.00	0.00	0.00

			SHRINKAGE (SH)				
Member	Station	Result Case	(P/A) @ Centroid (kips/ft²)	Normal Stress @ Point 1 (kips/ft²)	Normal Stress @ Point 2 (kips/ft²)	Normal Stress @ Point 3 (kips/ft²)	Normal Stress @ Point 4 (kips/ft²)
705	0	Stage 2: Stage 2: Stress Canopy PT	0.00	0.00	0.00	0.00	0.00
705	1	Stage 2: Stage 2: Stress Canopy PT	0.00	0.00	0.00	0.00	0.00
705	2	Stage 2: Stage 2: Stress Canopy PT	0.00	0.00	0.00	0.00	0.00
708	0	Stage 2: Stage 2: Stress Canopy PT	0.00	0.00	0.00	0.00	0.00
708	1	Stage 2: Stage 2: Stress Canopy PT	0.00	0.00	0.00	0.00	0.00
708	2	Stage 2: Stage 2: Stress Canopy PT	0.00	0.00	0.00	0.00	0.00
711	0	Stage 2: Stage 2: Stress Canopy PT	0.00	0.00	0.00	0.00	0.00
711	1	Stage 2: Stage 2: Stress Canopy PT	0.00	0.00	0.00	0.00	0.00
711	2	Stage 2: Stage 2: Stress Canopy PT	0.00	0.00	0.00	0.00	0.00
714	0	Stage 2: Stage 2: Stress Canopy PT	0.00	0.00	0.00	0.00	0.00
714	1	Stage 2: Stage 2: Stress Canopy PT	0.00	0.00	0.00	0.00	0.00
714	2	Stage 2: Stage 2: Stress Canopy PT	0.00	0.00	0.00	0.00	0.00
717	0	Stage 2: Stage 2: Stress Canopy PT	0.00	0.00	0.00	0.00	0.00
717	1	Stage 2: Stage 2: Stress Canopy PT	0.00	0.00	0.00	0.00	0.00
717	2	Stage 2: Stage 2: Stress Canopy PT	0.00	0.00	0.00	0.00	0.00
720	0	Stage 2: Stage 2: Stress Canopy PT	0.00	0.00	0.00	0.00	0.00
720	1	Stage 2: Stage 2: Stress Canopy PT	0.00	0.00	0.00	0.00	0.00
720	2	Stage 2: Stage 2: Stress Canopy PT	0.00	0.00	0.00	0.00	0.00
723	0	Stage 2: Stage 2: Stress Canopy PT	0.00	0.00	0.00	0.00	0.00
723	1	Stage 2: Stage 2: Stress Canopy PT	0.00	0.00	0.00	0.00	0.00
723	2	Stage 2: Stage 2: Stress Canopy PT	0.00	0.00	0.00	0.00	0.00
726	0	Stage 2: Stage 2: Stress Canopy PT	0.00	0.00	0.00	0.00	0.00
726	1	Stage 2: Stage 2: Stress Canopy PT	0.00	0.00	0.00	0.00	0.00
726	2	Stage 2: Stage 2: Stress Canopy PT	0.00	0.00	0.00	0.00	0.00
729	0	Stage 2: Stage 2: Stress Canopy PT	0.00	0.00	0.00	0.00	0.00
729	1	Stage 2: Stage 2: Stress Canopy PT	0.00	0.00	0.00	0.00	0.00
729	2	Stage 2: Stage 2: Stress Canopy PT	0.00	0.00	0.00	0.00	0.00
732	0	Stage 2: Stage 2: Stress Canopy PT	0.00	0.00	0.00	0.00	0.00
732	1	Stage 2: Stage 2: Stress Canopy PT	0.00	0.00	0.00	0.00	0.00
732	2	Stage 2: Stage 2: Stress Canopy PT	0.00	0.00	0.00	0.00	0.00

			PRESTRESS LOAD (PS)				
Member	Station	Result Case	(P/A) @ Centroid (kips/ft²)	Normal Stress @ Point 1 (kips/ft²)	Normal Stress @ Point 2 (kips/ft²)	Normal Stress @ Point 3 (kips/ft²)	Normal Stress @ Point 4 (kips/ft²)
705	0	Stage 2: Stage 2: Stress Canopy PT	-5.54	-12.85	1.78	1.78	-12.85
705	1	Stage 2: Stage 2: Stress Canopy PT	-5.54	0.31	-11.39	-11.39	0.31
705	2	Stage 2: Stage 2: Stress Canopy PT	-5.54	13.48	-24.55	-24.55	13.48
708	0	Stage 2: Stage 2: Stress Canopy PT	6.85	77.24	-63.54	-63.54	77.24
708	1	Stage 2: Stage 2: Stress Canopy PT	6.85	15.10	-1.40	-1.40	15.10
708	2	Stage 2: Stage 2: Stress Canopy PT	6.85	-47.04	60.74	60.74	-47.04
711	0	Stage 2: Stage 2: Stress Canopy PT	-3.70	3.61	-11.00	-11.00	3.61
711	1	Stage 2: Stage 2: Stress Canopy PT	-3.70	4.13	-11.52	-11.52	4.13
711	2	Stage 2: Stage 2: Stress Canopy PT	-3.70	4.65	-12.04	-12.04	4.65
714	0	Stage 2: Stage 2: Stress Canopy PT	1.38	65.24	-62.49	-62.49	65.24
714	1	Stage 2: Stage 2: Stress Canopy PT	1.38	1.97	0.78	0.78	1.97
714	2	Stage 2: Stage 2: Stress Canopy PT	1.38	-61.30	64.05	64.05	-61.30
717	0	Stage 2: Stage 2: Stress Canopy PT	-3.75	-6.65	-0.85	-0.85	-6.65
717	1	Stage 2: Stage 2: Stress Canopy PT	-3.75	3.29	-10.78	-10.78	3.29
717	2	Stage 2: Stage 2: Stress Canopy PT	-3.75	13.23	-20.72	-20.72	13.23
720	0	Stage 2: Stage 2: Stress Canopy PT	0.42	-52.11	52.96	52.96	-52.11
720	1	Stage 2: Stage 2: Stress Canopy PT	0.42	4.32	-3.48	-3.48	4.32
720	2	Stage 2: Stage 2: Stress Canopy PT	0.42	60.76	-59.92	-59.92	60.76
723	0	Stage 2: Stage 2: Stress Canopy PT	-2.96	-14.03	8.11	8.11	-14.03
723	1	Stage 2: Stage 2: Stress Canopy PT	-2.96	5.39	-11.32	-11.32	5.39
723	2	Stage 2: Stage 2: Stress Canopy PT	-2.96	24.82	-30.74	-30.74	24.82
726	0	Stage 2: Stage 2: Stress Canopy PT	-0.44	-21.12	20.24	20.24	-21.12
726	1	Stage 2: Stage 2: Stress Canopy PT	-0.44	9.23	-10.11	-10.11	9.23
726	2	Stage 2: Stage 2: Stress Canopy PT	-0.44	39.58	-40.46	-40.46	39.58
729	0	Stage 2: Stage 2: Stress Canopy PT	1.51	-35.20	38.23	38.23	-35.20
729	1	Stage 2: Stage 2: Stress Canopy PT	1.51	6.52	-3.50	-3.50	6.52
729	2	Stage 2: Stage 2: Stress Canopy PT	1.51	48.24	-45.22	-45.22	48.24
732	0	Stage 2: Stage 2: Stress Canopy PT	-3.53	-23.40	16.33	16.33	-23.40
732	1	Stage 2: Stage 2: Stress Canopy PT	-3.53	3.30	-10.37	-10.37	3.30
732	2	Stage 2: Stage 2: Stress Canopy PT	-3.53	29.99	-37.06	-37.06	29.99

			PT RELAXATION (PS)				
Member	Station	Result Case	(P/A) @ Centroid (kips/ft²)	Normal Stress @ Point 1 (kips/ft²)	Normal Stress @ Point 2 (kips/ft²)	Normal Stress @ Point 3 (kips/ft²)	Normal Stress @ Point 4 (kips/ft²)
705	0	Stage 2: Stage 2: Stress Canopy PT	0.00	0.00	0.00	0.00	0.00
705	1	Stage 2: Stage 2: Stress Canopy PT	0.00	0.00	0.00	0.00	0.00
705	2	Stage 2: Stage 2: Stress Canopy PT	0.00	0.00	0.00	0.00	0.00
708	0	Stage 2: Stage 2: Stress Canopy PT	0.00	0.00	0.00	0.00	0.00
708	1	Stage 2: Stage 2: Stress Canopy PT	0.00	0.00	0.00	0.00	0.00
708	2	Stage 2: Stage 2: Stress Canopy PT	0.00	0.00	0.00	0.00	0.00
711	0	Stage 2: Stage 2: Stress Canopy PT	0.00	0.00	0.00	0.00	0.00
711	1	Stage 2: Stage 2: Stress Canopy PT	0.00	0.00	0.00	0.00	0.00
711	2	Stage 2: Stage 2: Stress Canopy PT	0.00	0.00	0.00	0.00	0.00
714	0	Stage 2: Stage 2: Stress Canopy PT	0.00	0.00	0.00	0.00	0.00
714	1	Stage 2: Stage 2: Stress Canopy PT	0.00	0.00	0.00	0.00	0.00
714	2	Stage 2: Stage 2: Stress Canopy PT	0.00	0.00	0.00	0.00	0.00
717	0	Stage 2: Stage 2: Stress Canopy PT	0.00	0.00	0.00	0.00	0.00
717	1	Stage 2: Stage 2: Stress Canopy PT	0.00	0.00	0.00	0.00	0.00
717	2	Stage 2: Stage 2: Stress Canopy PT	0.00	0.00	0.00	0.00	0.00
720	0	Stage 2: Stage 2: Stress Canopy PT	0.00	0.00	0.00	0.00	0.00
720	1	Stage 2: Stage 2: Stress Canopy PT	0.00	0.00	0.00	0.00	0.00
720	2	Stage 2: Stage 2: Stress Canopy PT	0.00	0.00	0.00	0.00	0.00
723	0	Stage 2: Stage 2: Stress Canopy PT	0.00	0.00	0.00	0.00	0.00
723	1	Stage 2: Stage 2: Stress Canopy PT	0.00	0.00	0.00	0.00	0.00
723	2	Stage 2: Stage 2: Stress Canopy PT	0.00	0.00	0.00	0.00	0.00
726	0	Stage 2: Stage 2: Stress Canopy PT	0.00	0.00	0.00	0.00	0.00
726	1	Stage 2: Stage 2: Stress Canopy PT	0.00	0.00	0.00	0.00	0.00
726	2	Stage 2: Stage 2: Stress Canopy PT	0.00	0.00	0.00	0.00	0.00
729	0	Stage 2: Stage 2: Stress Canopy PT	0.00	0.00	0.00	0.00	0.00
729	1	Stage 2: Stage 2: Stress Canopy PT	0.00	0.00	0.00	0.00	0.00
729	2	Stage 2: Stage 2: Stress Canopy PT	0.00	0.00	0.00	0.00	0.00
732	0	Stage 2: Stage 2: Stress Canopy PT	0.00	0.00	0.00	0.00	0.00
732	1	Stage 2: Stage 2: Stress Canopy PT	0.00	0.00	0.00	0.00	0.00
732	2	Stage 2: Stage 2: Stress Canopy PT	0.00	0.00	0.00	0.00	0.00

			OTHER PT LOSSES (PS)				
Member	Station	Result Case	(P/A) @ Centroid (kips/ft²)	Normal Stress @ Point 1 (kips/ft²)	Normal Stress @ Point 2 (kips/ft²)	Normal Stress @ Point 3 (kips/ft²)	Normal Stress @ Point 4 (kips/ft²)
705	0	Stage 2: Stage 2: Stress Canopy PT	0.00	0.00	0.00	0.00	0.00
705	1	Stage 2: Stage 2: Stress Canopy PT	0.00	0.00	0.00	0.00	0.00
705	2	Stage 2: Stage 2: Stress Canopy PT	0.00	0.00	0.00	0.00	0.00
708	0	Stage 2: Stage 2: Stress Canopy PT	0.00	0.00	0.00	0.00	0.00
708	1	Stage 2: Stage 2: Stress Canopy PT	0.00	0.00	0.00	0.00	0.00
708	2	Stage 2: Stage 2: Stress Canopy PT	0.00	0.00	0.00	0.00	0.00
711	0	Stage 2: Stage 2: Stress Canopy PT	0.00	0.00	0.00	0.00	0.00
711	1	Stage 2: Stage 2: Stress Canopy PT	0.00	0.00	0.00	0.00	0.00
711	2	Stage 2: Stage 2: Stress Canopy PT	0.00	0.00	0.00	0.00	0.00
714	0	Stage 2: Stage 2: Stress Canopy PT	0.00	0.00	0.00	0.00	0.00
714	1	Stage 2: Stage 2: Stress Canopy PT	0.00	0.00	0.00	0.00	0.00
714	2	Stage 2: Stage 2: Stress Canopy PT	0.00	0.00	0.00	0.00	0.00
717	0	Stage 2: Stage 2: Stress Canopy PT	0.00	0.00	0.00	0.00	0.00
717	1	Stage 2: Stage 2: Stress Canopy PT	0.00	0.00	0.00	0.00	0.00
717	2	Stage 2: Stage 2: Stress Canopy PT	0.00	0.00	0.00	0.00	0.00
720	0	Stage 2: Stage 2: Stress Canopy PT	0.00	0.00	0.00	0.00	0.00
720	1	Stage 2: Stage 2: Stress Canopy PT	0.00	0.00	0.00	0.00	0.00
720	2	Stage 2: Stage 2: Stress Canopy PT	0.00	0.00	0.00	0.00	0.00
723	0	Stage 2: Stage 2: Stress Canopy PT	0.00	0.00	0.00	0.00	0.00
723	1	Stage 2: Stage 2: Stress Canopy PT	0.00	0.00	0.00	0.00	0.00
723	2	Stage 2: Stage 2: Stress Canopy PT	0.00	0.00	0.00	0.00	0.00
726	0	Stage 2: Stage 2: Stress Canopy PT	0.00	0.00	0.00	0.00	0.00
726	1	Stage 2: Stage 2: Stress Canopy PT	0.00	0.00	0.00	0.00	0.00
726	2	Stage 2: Stage 2: Stress Canopy PT	0.00	0.00	0.00	0.00	0.00
729	0	Stage 2: Stage 2: Stress Canopy PT	0.00	0.00	0.00	0.00	0.00
729	1	Stage 2: Stage 2: Stress Canopy PT	0.00	0.00	0.00	0.00	0.00
729	2	Stage 2: Stage 2: Stress Canopy PT	0.00	0.00	0.00	0.00	0.00
732	0	Stage 2: Stage 2: Stress Canopy PT	0.00	0.00	0.00	0.00	0.00
732	1	Stage 2: Stage 2: Stress Canopy PT	0.00	0.00	0.00	0.00	0.00
732	2	Stage 2: Stage 2: Stress Canopy PT	0.00	0.00	0.00	0.00	0.00

			SERVICE III				
Member	Station	Result Case	(P/A) @ Centroid (kips/ft²)	Normal Stress @ Point 1 (kips/ft²)	Normal Stress @ Point 2 (kips/ft²)	Normal Stress @ Point 3 (kips/ft²)	Normal Stress @ Point 4 (kips/ft²)
705	0	Stage 2: Stage 2: Stress Canopy PT	74	81	68	68	81
705	1	Stage 2: Stage 2: Stress Canopy PT	75	72	78	78	72
705	2	Stage 2: Stage 2: Stress Canopy PT	76	122	30	30	122
708	0	Stage 2: Stage 2: Stress Canopy PT	-87	-41	-134	-134	-41
708	1	Stage 2: Stage 2: Stress Canopy PT	-86	-97	-76	-76	-97
708	2	Stage 2: Stage 2: Stress Canopy PT	-86	-148	-23	-23	-148
711	0	Stage 2: Stage 2: Stress Canopy PT	-188	-152	-224	-224	-152
711	1	Stage 2: Stage 2: Stress Canopy PT	-187	-203	-171	-171	-203
711	2	Stage 2: Stage 2: Stress Canopy PT	-186	-183	-189	-189	-183
714	0	Stage 2: Stage 2: Stress Canopy PT	62	32	93	93	32
714	1	Stage 2: Stage 2: Stress Canopy PT	63	50	76	76	50
714	2	Stage 2: Stage 2: Stress Canopy PT	64	68	60	60	68
717	0	Stage 2: Stage 2: Stress Canopy PT	-15	-44	14	14	-44
717	1	Stage 2: Stage 2: Stress Canopy PT	-14	-40	12	12	-40
717	2	Stage 2: Stage 2: Stress Canopy PT	-13	19	-46	-46	19
720	0	Stage 2: Stage 2: Stress Canopy PT	-20	-136	95	95	-136
720	1	Stage 2: Stage 2: Stress Canopy PT	-19	-26	-13	-13	-26
720	2	Stage 2: Stage 2: Stress Canopy PT	-19	90	-127	-127	90
723	0	Stage 2: Stage 2: Stress Canopy PT	140	134	146	146	134
723	1	Stage 2: Stage 2: Stress Canopy PT	141	145	137	137	145
723	2	Stage 2: Stage 2: Stress Canopy PT	142	191	93	93	191
726	0	Stage 2: Stage 2: Stress Canopy PT	-153	-159	-146	-146	-159
726	1	Stage 2: Stage 2: Stress Canopy PT	-152	-149	-155	-155	-149
726	2	Stage 2: Stage 2: Stress Canopy PT	-151	-117	-184	-184	-117
729	0	Stage 2: Stage 2: Stress Canopy PT	-95	-107	-84	-84	-107
729	1	Stage 2: Stage 2: Stress Canopy PT	-94	-89	-100	-100	-89
729	2	Stage 2: Stage 2: Stress Canopy PT	-93	-53	-133	-133	-53
732	0	Stage 2: Stage 2: Stress Canopy PT	85	34	136	136	34
732	1	Stage 2: Stage 2: Stress Canopy PT	86	72	99	99	72
732	2	Stage 2: Stage 2: Stress Canopy PT	87	160	13	13	160

MEMBER STRESSES

DIAGONAL MEMBERS
EOC

Note: Stresses given at member's discontinuities (break points).

Member No.	LARSA Member	MEMBER STRESS (ksf)
2	705	-196
3	708	325
4	711	-68
5	714	115
6	717	133
7	720	103
8	723	343
9	726	-64
10	729	449
11	732	-325
14	741	-139
15	744	251
16	747	38
17	750	184
18	753	28
19	756	103
20	759	36
21	762	55
22	765	109
23	768	29

			SELWEIGHT (DC)				
Member	Station	Result Case	(P/A) @ Centroid (kips/ft²)	Normal Stress @ Point 1 (kips/ft²)	Normal Stress @ Point 2 (kips/ft²)	Normal Stress @ Point 3 (kips/ft²)	Normal Stress @ Point 4 (kips/ft²)
705	0	EOC: Other PT Losses	-344.35	-455.42	-233.15	-233.28	-455.56
705	1	EOC: Other PT Losses	-343.45	-430.21	-256.62	-256.69	-430.27
705	2	EOC: Other PT Losses	-342.54	-347.17	-337.92	-337.92	-347.17
708	0	EOC: Other PT Losses	169.00	9.58	328.66	328.42	9.34
708	1	EOC: Other PT Losses	169.78	131.62	208.04	207.95	131.53
708	2	EOC: Other PT Losses	170.57	257.72	83.35	83.42	257.79
711	0	EOC: Other PT Losses	-206.28	-237.42	-175.04	-175.13	-237.51
711	1	EOC: Other PT Losses	-205.37	-243.52	-167.16	-167.22	-243.59
711	2	EOC: Other PT Losses	-204.47	-177.96	-230.94	-230.98	-178.00
714	0	EOC: Other PT Losses	67.35	-4.95	139.72	139.65	-5.02
714	1	EOC: Other PT Losses	68.24	77.93	58.56	58.55	77.91
714	2	EOC: Other PT Losses	69.12	161.05	-22.84	-22.81	161.08
717	0	EOC: Other PT Losses	-10.97	-36.93	15.08	15.00	-37.01
717	1	EOC: Other PT Losses	-10.06	-44.40	24.35	24.28	-44.47
717	2	EOC: Other PT Losses	-9.15	2.82	-21.07	-21.13	2.76
720	0	EOC: Other PT Losses	-24.25	-72.58	24.12	24.08	-72.62
720	1	EOC: Other PT Losses	-23.32	-33.83	-12.76	-12.81	-33.88
720	2	EOC: Other PT Losses	-22.38	12.05	-56.76	-56.82	11.99
723	0	EOC: Other PT Losses	160.58	136.11	185.13	185.06	136.03
723	1	EOC: Other PT Losses	161.49	144.61	178.45	178.37	144.54
723	2	EOC: Other PT Losses	162.41	189.27	135.63	135.55	189.18
726	0	EOC: Other PT Losses	-167.85	-259.87	-75.74	-75.82	-259.96
726	1	EOC: Other PT Losses	-166.94	-203.81	-129.99	-130.07	-203.88
726	2	EOC: Other PT Losses	-166.03	-126.44	-205.53	-205.61	-126.52
729	0	EOC: Other PT Losses	240.34	325.97	154.80	154.72	325.89
729	1	EOC: Other PT Losses	241.28	251.21	231.43	231.35	251.13
729	2	EOC: Other PT Losses	242.21	193.93	290.59	290.50	193.84
732	0	EOC: Other PT Losses	-387.32	-330.29	-444.28	-444.35	-330.36
732	1	EOC: Other PT Losses	-386.44	-404.67	-368.14	-368.21	-404.74
732	2	EOC: Other PT Losses	-385.56	-429.87	-341.18	-341.25	-429.95
741	0	EOC: Other PT Losses	-194.66	-189.40	-199.89	-199.92	-189.43
741	1	EOC: Other PT Losses	-193.75	-217.54	-169.97	-169.97	-217.54
741	2	EOC: Other PT Losses	-192.85	-196.12	-189.61	-189.57	-196.08
744	0	EOC: Other PT Losses	98.68	89.23	108.07	108.12	89.29
744	1	EOC: Other PT Losses	99.53	86.61	112.41	112.45	86.65
744	2	EOC: Other PT Losses	100.38	98.88	101.86	101.88	98.90
747	0	EOC: Other PT Losses	-20.46	-12.16	-28.76	-28.75	-12.15
747	1	EOC: Other PT Losses	-19.82	-27.56	-12.06	-12.07	-27.57
747	2	EOC: Other PT Losses	-19.18	-42.69	4.38	4.34	-42.73
750	0	EOC: Other PT Losses	17.27	19.94	14.56	14.60	19.97
750	1	EOC: Other PT Losses	18.03	4.07	31.95	31.99	4.11
750	2	EOC: Other PT Losses	18.79	3.84	33.69	33.74	3.88
753	0	EOC: Other PT Losses	8.47	9.28	7.68	7.66	9.26
753	1	EOC: Other PT Losses	9.03	12.52	5.56	5.53	12.50
753	2	EOC: Other PT Losses	9.59	17.08	2.13	2.10	17.05
756	0	EOC: Other PT Losses	-33.55	-54.94	-12.16	-12.15	-54.93
756	1	EOC: Other PT Losses	-32.82	-47.17	-18.50	-18.48	-47.14
756	2	EOC: Other PT Losses	-32.10	-22.33	-41.91	-41.86	-22.28
759	0	EOC: Other PT Losses	53.52	19.28	87.81	87.76	19.22
759	1	EOC: Other PT Losses	54.02	55.08	53.00	52.96	55.04
759	2	EOC: Other PT Losses	54.52	92.61	16.45	16.42	92.58
762	0	EOC: Other PT Losses	-92.94	-139.30	-46.55	-46.58	-139.32
762	1	EOC: Other PT Losses	-92.24	-109.99	-74.51	-74.49	-109.98
762	2	EOC: Other PT Losses	-91.55	-62.92	-120.23	-120.18	-62.87
765	0	EOC: Other PT Losses	74.15	5.86	142.55	142.44	5.75
765	1	EOC: Other PT Losses	74.60	60.82	88.46	88.39	60.75
765	2	EOC: Other PT Losses	75.06	117.64	32.50	32.47	117.61
768	0	EOC: Other PT Losses	-151.06	-195.82	-106.21	-106.30	-195.90
768	1	EOC: Other PT Losses	-150.30	-173.19	-127.39	-127.40	-173.20
768	2	EOC: Other PT Losses	-149.53	-126.83	-172.30	-172.24	-126.77

			NONSTRUCTURAL COMPONENTS (DC)				
Member	Station	Result Case	(P/A) @ Centroid (kips/ft²)	Normal Stress @ Point 1 (kips/ft²)	Normal Stress @ Point 2 (kips/ft²)	Normal Stress @ Point 3 (kips/ft²)	Normal Stress @ Point 4 (kips/ft²)
705	0	EOC: Other PT Losses	-7.78	-9.99	-5.58	-5.58	-9.99
705	1	EOC: Other PT Losses	-7.78	-9.08	-6.48	-6.48	-9.08
705	2	EOC: Other PT Losses	-7.78	-8.17	-7.39	-7.39	-8.17
708	0	EOC: Other PT Losses	4.97	1.13	8.81	8.81	1.13
708	1	EOC: Other PT Losses	4.97	4.30	5.63	5.63	4.30
708	2	EOC: Other PT Losses	4.97	7.48	2.46	2.46	7.48
711	0	EOC: Other PT Losses	-2.89	-4.02	-1.76	-1.76	-4.02
711	1	EOC: Other PT Losses	-2.89	-3.58	-2.20	-2.20	-3.58
711	2	EOC: Other PT Losses	-2.89	-3.14	-2.64	-2.64	-3.14
714	0	EOC: Other PT Losses	2.12	2.53	1.72	1.72	2.53
714	1	EOC: Other PT Losses	2.12	2.15	2.10	2.10	2.15
714	2	EOC: Other PT Losses	2.12	1.77	2.48	2.48	1.77
717	0	EOC: Other PT Losses	3.02	2.21	3.83	3.83	2.21
717	1	EOC: Other PT Losses	3.02	2.57	3.48	3.48	2.57
717	2	EOC: Other PT Losses	3.02	2.93	3.12	3.12	2.93
720	0	EOC: Other PT Losses	-0.32	-3.10	2.47	2.46	-3.10
720	1	EOC: Other PT Losses	-0.32	-0.43	-0.20	-0.21	-0.43
720	2	EOC: Other PT Losses	-0.32	2.24	-2.88	-2.87	2.24
723	0	EOC: Other PT Losses	7.12	6.41	7.84	7.84	6.41
723	1	EOC: Other PT Losses	7.12	6.94	7.30	7.30	6.94
723	2	EOC: Other PT Losses	7.12	7.48	6.77	6.77	7.48
726	0	EOC: Other PT Losses	-3.46	-6.09	-0.82	-0.82	-6.09
726	1	EOC: Other PT Losses	-3.46	-3.88	-3.04	-3.04	-3.88
726	2	EOC: Other PT Losses	-3.46	-1.66	-5.25	-5.25	-1.66
729	0	EOC: Other PT Losses	8.49	9.71	7.26	7.27	9.71
729	1	EOC: Other PT Losses	8.49	8.80	8.18	8.18	8.79
729	2	EOC: Other PT Losses	8.49	7.88	9.10	9.10	7.88
732	0	EOC: Other PT Losses	-7.56	-7.56	-7.55	-7.56	-7.56
732	1	EOC: Other PT Losses	-7.56	-7.78	-7.33	-7.33	-7.78
732	2	EOC: Other PT Losses	-7.56	-8.01	-7.10	-7.10	-8.01
741	0	EOC: Other PT Losses	-1.22	-2.40	-0.05	-0.05	-2.40
741	1	EOC: Other PT Losses	-1.22	-1.40	-1.05	-1.05	-1.40
741	2	EOC: Other PT Losses	-1.22	-0.40	-2.05	-2.05	-0.40
744	0	EOC: Other PT Losses	3.20	1.76	4.65	4.65	1.76
744	1	EOC: Other PT Losses	3.20	2.77	3.64	3.64	2.77
744	2	EOC: Other PT Losses	3.20	3.78	2.63	2.63	3.78
747	0	EOC: Other PT Losses	0.97	-0.06	2.00	1.99	-0.06
747	1	EOC: Other PT Losses	0.97	0.21	1.73	1.73	0.21
747	2	EOC: Other PT Losses	0.97	0.48	1.46	1.46	0.48
750	0	EOC: Other PT Losses	1.59	2.30	0.87	0.87	2.30
750	1	EOC: Other PT Losses	1.59	1.65	1.52	1.52	1.65
750	2	EOC: Other PT Losses	1.59	1.00	2.17	2.17	1.00
753	0	EOC: Other PT Losses	-0.03	0.98	-1.03	-1.03	0.97
753	1	EOC: Other PT Losses	-0.03	0.15	-0.20	-0.20	0.14
753	2	EOC: Other PT Losses	-0.03	-0.68	0.63	0.63	-0.69
756	0	EOC: Other PT Losses	2.26	2.65	1.87	1.87	2.64
756	1	EOC: Other PT Losses	2.26	2.35	2.17	2.17	2.35
756	2	EOC: Other PT Losses	2.26	2.06	2.46	2.46	2.06
759	0	EOC: Other PT Losses	0.20	1.00	-0.59	-0.59	1.00
759	1	EOC: Other PT Losses	0.20	0.22	0.19	0.19	0.22
759	2	EOC: Other PT Losses	0.20	-0.56	0.97	0.97	-0.56
762	0	EOC: Other PT Losses	1.58	1.70	1.46	1.46	1.70
762	1	EOC: Other PT Losses	1.58	1.45	1.71	1.70	1.45
762	2	EOC: Other PT Losses	1.58	1.21	1.95	1.95	1.20
765	0	EOC: Other PT Losses	-1.56	-1.19	-1.93	-1.93	-1.20
765	1	EOC: Other PT Losses	-1.56	-1.86	-1.26	-1.27	-1.86
765	2	EOC: Other PT Losses	-1.56	-2.52	-0.60	-0.60	-2.52
768	0	EOC: Other PT Losses	3.35	7.83	-1.12	-1.13	7.82
768	1	EOC: Other PT Losses	3.35	4.94	1.76	1.76	4.94
768	2	EOC: Other PT Losses	3.35	2.06	4.64	4.64	2.06

			CREEP (CR)				
Member	Station	Result Case	(P/A) @ Centroid (kips/ft²)	Normal Stress @ Point 1 (kips/ft²)	Normal Stress @ Point 2 (kips/ft²)	Normal Stress @ Point 3 (kips/ft²)	Normal Stress @ Point 4 (kips/ft²)
705	0	EOC: Other PT Losses	25.67	75.30	-23.98	-23.95	75.32
705	1	EOC: Other PT Losses	25.67	48.56	2.76	2.78	48.58
705	2	EOC: Other PT Losses	25.67	21.83	29.50	29.52	21.85
708	0	EOC: Other PT Losses	-18.77	-41.51	3.94	3.96	-41.48
708	1	EOC: Other PT Losses	-18.77	-7.39	-30.16	-30.15	-7.39
708	2	EOC: Other PT Losses	-18.77	26.73	-64.25	-64.27	26.70
711	0	EOC: Other PT Losses	18.46	1.99	34.89	34.92	2.02
711	1	EOC: Other PT Losses	18.46	1.30	35.58	35.61	1.33
711	2	EOC: Other PT Losses	18.46	0.61	36.27	36.30	0.64
714	0	EOC: Other PT Losses	-10.38	8.22	-29.01	-28.99	8.24
714	1	EOC: Other PT Losses	-10.38	-11.22	-9.55	-9.55	-11.21
714	2	EOC: Other PT Losses	-10.38	-30.65	9.91	9.89	-30.67
717	0	EOC: Other PT Losses	23.09	16.41	29.74	29.77	16.44
717	1	EOC: Other PT Losses	23.09	14.26	31.89	31.92	14.29
717	2	EOC: Other PT Losses	23.09	12.11	34.05	34.07	12.13
720	0	EOC: Other PT Losses	-6.26	-11.20	-1.31	-1.32	-11.21
720	1	EOC: Other PT Losses	-6.26	-8.20	-4.32	-4.32	-8.19
720	2	EOC: Other PT Losses	-6.26	-5.20	-7.34	-7.31	-5.18
723	0	EOC: Other PT Losses	9.71	7.14	12.24	12.28	7.18
723	1	EOC: Other PT Losses	9.71	2.98	16.41	16.44	3.01
723	2	EOC: Other PT Losses	9.71	-1.18	20.58	20.60	-1.16
726	0	EOC: Other PT Losses	7.72	7.39	8.06	8.05	7.38
726	1	EOC: Other PT Losses	7.72	5.99	9.45	9.46	6.00
726	2	EOC: Other PT Losses	7.72	4.59	10.83	10.86	4.61
729	0	EOC: Other PT Losses	-7.49	-14.10	-0.91	-0.87	-14.06
729	1	EOC: Other PT Losses	-7.49	-10.49	-4.50	-4.48	-10.47
729	2	EOC: Other PT Losses	-7.49	-6.88	-8.09	-8.09	-6.88
732	0	EOC: Other PT Losses	45.75	44.44	47.07	47.07	44.43
732	1	EOC: Other PT Losses	45.75	39.86	51.64	51.64	39.86
732	2	EOC: Other PT Losses	45.75	35.29	56.21	56.22	35.30
741	0	EOC: Other PT Losses	41.79	37.75	45.83	45.83	37.75
741	1	EOC: Other PT Losses	41.79	34.52	49.07	49.06	34.51
741	2	EOC: Other PT Losses	41.79	31.29	52.31	52.29	31.27
744	0	EOC: Other PT Losses	-6.92	-5.51	-8.30	-8.33	-5.54
744	1	EOC: Other PT Losses	-6.92	-7.37	-6.45	-6.47	-7.39
744	2	EOC: Other PT Losses	-6.92	-9.23	-4.60	-4.61	-9.24
747	0	EOC: Other PT Losses	4.79	8.78	0.81	0.79	8.77
747	1	EOC: Other PT Losses	4.79	6.04	3.54	3.54	6.04
747	2	EOC: Other PT Losses	4.79	3.30	6.26	6.28	3.31
750	0	EOC: Other PT Losses	12.77	13.04	12.52	12.49	13.02
750	1	EOC: Other PT Losses	12.77	11.28	14.28	14.26	11.25
750	2	EOC: Other PT Losses	12.77	9.51	16.05	16.03	9.49
753	0	EOC: Other PT Losses	-6.70	-0.26	-13.11	-13.13	-0.28
753	1	EOC: Other PT Losses	-6.70	-7.65	-5.74	-5.74	-7.65
753	2	EOC: Other PT Losses	-6.70	-15.04	1.64	1.65	-15.03
756	0	EOC: Other PT Losses	21.04	24.84	17.28	17.25	24.81
756	1	EOC: Other PT Losses	21.04	18.68	23.43	23.40	18.66
756	2	EOC: Other PT Losses	21.04	12.53	29.57	29.56	12.51
759	0	EOC: Other PT Losses	-14.25	-3.46	-25.03	-25.04	-3.47
759	1	EOC: Other PT Losses	-14.25	-14.41	-14.10	-14.09	-14.40
759	2	EOC: Other PT Losses	-14.25	-25.36	-3.16	-3.14	-25.34
762	0	EOC: Other PT Losses	18.02	20.26	15.81	15.79	20.24
762	1	EOC: Other PT Losses	18.02	14.12	21.95	21.93	14.10
762	2	EOC: Other PT Losses	18.02	7.97	28.09	28.08	7.96
765	0	EOC: Other PT Losses	-15.05	-7.90	-22.21	-22.21	-7.90
765	1	EOC: Other PT Losses	-15.05	-13.75	-16.37	-16.36	-13.73
765	2	EOC: Other PT Losses	-15.05	-19.60	-10.54	-10.51	-19.57
768	0	EOC: Other PT Losses	4.92	2.04	7.82	7.81	2.03
768	1	EOC: Other PT Losses	4.92	0.17	9.69	9.68	0.16
768	2	EOC: Other PT Losses	4.92	-1.70	11.56	11.55	-1.71

			SHRINKAGE (SH)				
Member	Station	Result Case	(P/A) @ Centroid (kips/ft²)	Normal Stress @ Point 1 (kips/ft²)	Normal Stress @ Point 2 (kips/ft²)	Normal Stress @ Point 3 (kips/ft²)	Normal Stress @ Point 4 (kips/ft²)
705	0	EOC: Other PT Losses	-3.99	-5.41	-2.56	-2.56	-5.41
705	1	EOC: Other PT Losses	-3.99	-5.12	-2.85	-2.85	-5.13
705	2	EOC: Other PT Losses	-3.99	-4.84	-3.13	-3.13	-4.84
708	0	EOC: Other PT Losses	-1.67	-3.50	0.16	0.16	-3.50
708	1	EOC: Other PT Losses	-1.67	-1.61	-1.73	-1.73	-1.61
708	2	EOC: Other PT Losses	-1.67	0.28	-3.62	-3.62	0.28
711	0	EOC: Other PT Losses	3.68	3.19	4.18	4.18	3.19
711	1	EOC: Other PT Losses	3.68	2.89	4.48	4.48	2.88
711	2	EOC: Other PT Losses	3.68	2.58	4.79	4.78	2.58
714	0	EOC: Other PT Losses	-4.40	-4.18	-4.62	-4.62	-4.18
714	1	EOC: Other PT Losses	-4.40	-3.90	-4.90	-4.90	-3.90
714	2	EOC: Other PT Losses	-4.40	-3.62	-5.18	-5.18	-3.62
717	0	EOC: Other PT Losses	8.62	8.59	8.66	8.65	8.59
717	1	EOC: Other PT Losses	8.62	8.10	9.15	9.15	8.09
717	2	EOC: Other PT Losses	8.62	7.60	9.64	9.64	7.60
720	0	EOC: Other PT Losses	-6.42	-7.74	-5.09	-5.09	-7.74
720	1	EOC: Other PT Losses	-6.42	-7.29	-5.54	-5.55	-7.29
720	2	EOC: Other PT Losses	-6.42	-6.83	-6.00	-6.00	-6.83
723	0	EOC: Other PT Losses	10.25	11.60	8.90	8.90	11.60
723	1	EOC: Other PT Losses	10.25	10.15	10.34	10.34	10.15
723	2	EOC: Other PT Losses	10.25	8.71	11.78	11.78	8.71
726	0	EOC: Other PT Losses	-8.43	-8.83	-8.02	-8.02	-8.83
726	1	EOC: Other PT Losses	-8.43	-9.64	-7.21	-7.21	-9.64
726	2	EOC: Other PT Losses	-8.43	-10.45	-6.40	-6.40	-10.45
729	0	EOC: Other PT Losses	7.87	14.09	1.64	1.64	14.09
729	1	EOC: Other PT Losses	7.87	7.26	8.47	8.47	7.26
729	2	EOC: Other PT Losses	7.87	0.43	15.30	15.30	0.43
732	0	EOC: Other PT Losses	-5.31	-3.46	-7.17	-7.17	-3.46
732	1	EOC: Other PT Losses	-5.31	-4.79	-5.84	-5.84	-4.79
732	2	EOC: Other PT Losses	-5.31	-6.12	-4.51	-4.51	-6.12
741	0	EOC: Other PT Losses	-12.43	-9.81	-15.04	-15.04	-9.82
741	1	EOC: Other PT Losses	-12.43	-11.87	-12.99	-12.99	-11.87
741	2	EOC: Other PT Losses	-12.43	-13.92	-10.94	-10.94	-13.92
744	0	EOC: Other PT Losses	13.17	19.19	7.15	7.16	19.19
744	1	EOC: Other PT Losses	13.17	11.61	14.73	14.73	11.61
744	2	EOC: Other PT Losses	13.17	4.04	22.31	22.31	4.04
747	0	EOC: Other PT Losses	-10.59	-4.30	-16.88	-16.88	-4.30
747	1	EOC: Other PT Losses	-10.59	-9.82	-11.36	-11.36	-9.82
747	2	EOC: Other PT Losses	-10.59	-15.33	-5.85	-5.85	-15.33
750	0	EOC: Other PT Losses	13.45	16.59	10.31	10.31	16.59
750	1	EOC: Other PT Losses	13.45	13.06	13.84	13.84	13.06
750	2	EOC: Other PT Losses	13.45	9.53	17.37	17.37	9.53
753	0	EOC: Other PT Losses	-9.22	-4.18	-14.26	-14.26	-4.18
753	1	EOC: Other PT Losses	-9.22	-9.12	-9.32	-9.32	-9.12
753	2	EOC: Other PT Losses	-9.22	-14.06	-4.37	-4.38	-14.06
756	0	EOC: Other PT Losses	10.13	12.32	7.93	7.93	12.32
756	1	EOC: Other PT Losses	10.13	9.18	11.08	11.08	9.18
756	2	EOC: Other PT Losses	10.13	6.03	14.23	14.23	6.03
759	0	EOC: Other PT Losses	-7.07	-4.02	-10.11	-10.11	-4.02
759	1	EOC: Other PT Losses	-7.07	-6.90	-7.23	-7.23	-6.91
759	2	EOC: Other PT Losses	-7.07	-9.79	-4.34	-4.34	-9.79
762	0	EOC: Other PT Losses	3.62	3.15	4.09	4.09	3.15
762	1	EOC: Other PT Losses	3.62	2.12	5.12	5.12	2.12
762	2	EOC: Other PT Losses	3.62	1.08	6.16	6.16	1.08
765	0	EOC: Other PT Losses	-4.00	-5.04	-2.96	-2.96	-5.05
765	1	EOC: Other PT Losses	-4.00	-4.23	-3.77	-3.78	-4.23
765	2	EOC: Other PT Losses	-4.00	-3.42	-4.59	-4.59	-3.42
768	0	EOC: Other PT Losses	-4.98	-7.26	-2.69	-2.70	-7.26
768	1	EOC: Other PT Losses	-4.98	-6.49	-3.47	-3.47	-6.49
768	2	EOC: Other PT Losses	-4.98	-5.71	-4.24	-4.24	-5.71

			PRESTRESS LOAD (PS)				
Member	Station	Result Case	(P/A) @ Centroid (kips/ft²)	Normal Stress @ Point 1 (kips/ft²)	Normal Stress @ Point 2 (kips/ft²)	Normal Stress @ Point 3 (kips/ft²)	Normal Stress @ Point 4 (kips/ft²)
705	0	EOC: Other PT Losses	33.45	23.58	43.30	43.31	23.59
705	1	EOC: Other PT Losses	33.45	34.75	32.13	32.14	34.76
705	2	EOC: Other PT Losses	33.45	45.92	20.96	20.97	45.93
708	0	EOC: Other PT Losses	-15.45	107.01	-137.92	-137.91	107.01
708	1	EOC: Other PT Losses	-15.45	-2.26	-28.65	-28.65	-2.26
708	2	EOC: Other PT Losses	-15.45	-111.52	80.62	80.62	-111.52
711	0	EOC: Other PT Losses	45.47	50.34	40.58	40.59	50.35
711	1	EOC: Other PT Losses	45.47	50.35	40.56	40.58	50.37
711	2	EOC: Other PT Losses	45.47	50.36	40.55	40.57	50.38
714	0	EOC: Other PT Losses	-20.90	98.40	-140.21	-140.20	98.40
714	1	EOC: Other PT Losses	-20.90	-17.04	-24.76	-24.76	-17.05
714	2	EOC: Other PT Losses	-20.90	-132.48	90.69	90.68	-132.49
717	0	EOC: Other PT Losses	41.95	35.64	48.24	48.25	35.66
717	1	EOC: Other PT Losses	41.95	47.78	36.09	36.11	47.80
717	2	EOC: Other PT Losses	41.95	59.93	23.95	23.96	59.94
720	0	EOC: Other PT Losses	-25.04	-115.89	65.83	65.82	-115.90
720	1	EOC: Other PT Losses	-25.04	-24.48	-25.60	-25.59	-24.48
720	2	EOC: Other PT Losses	-25.04	66.93	-117.02	-117.00	66.95
723	0	EOC: Other PT Losses	35.90	20.34	51.44	51.46	20.36
723	1	EOC: Other PT Losses	35.90	43.32	28.46	28.48	43.34
723	2	EOC: Other PT Losses	35.90	66.30	5.49	5.50	66.31
726	0	EOC: Other PT Losses	-32.74	-71.19	5.72	5.72	-71.19
726	1	EOC: Other PT Losses	-32.74	-25.21	-40.27	-40.26	-25.20
726	2	EOC: Other PT Losses	-32.74	20.77	-86.27	-86.25	20.79
729	0	EOC: Other PT Losses	33.08	-12.05	78.19	78.21	-12.02
729	1	EOC: Other PT Losses	33.08	41.00	25.15	25.16	41.01
729	2	EOC: Other PT Losses	33.08	94.05	-27.89	-27.89	94.05
732	0	EOC: Other PT Losses	-54.02	-92.15	-15.88	-15.88	-92.15
732	1	EOC: Other PT Losses	-54.02	-56.81	-51.22	-51.22	-56.81
732	2	EOC: Other PT Losses	-54.02	-21.47	-86.57	-86.56	-21.47
741	0	EOC: Other PT Losses	-86.04	-106.67	-65.41	-65.41	-106.66
741	1	EOC: Other PT Losses	-86.04	-84.42	-87.65	-87.65	-84.42
741	2	EOC: Other PT Losses	-86.04	-62.18	-109.89	-109.89	-62.18
744	0	EOC: Other PT Losses	50.04	52.49	47.59	47.58	52.48
744	1	EOC: Other PT Losses	50.04	51.88	48.19	48.19	51.88
744	2	EOC: Other PT Losses	50.04	51.27	48.80	48.80	51.27
747	0	EOC: Other PT Losses	-32.70	4.69	-70.09	-70.10	4.69
747	1	EOC: Other PT Losses	-32.70	-36.90	-28.51	-28.50	-36.90
747	2	EOC: Other PT Losses	-32.70	-78.49	13.08	13.09	-78.49
750	0	EOC: Other PT Losses	48.07	65.90	30.24	30.24	65.90
750	1	EOC: Other PT Losses	48.07	47.87	48.27	48.27	47.87
750	2	EOC: Other PT Losses	48.07	29.84	66.30	66.30	29.84
753	0	EOC: Other PT Losses	-36.23	12.50	-84.97	-84.96	12.51
753	1	EOC: Other PT Losses	-36.23	-34.71	-37.76	-37.76	-34.70
753	2	EOC: Other PT Losses	-36.23	-81.91	9.45	9.45	-81.91
756	0	EOC: Other PT Losses	52.35	71.68	33.01	33.01	71.68
756	1	EOC: Other PT Losses	52.35	52.51	52.18	52.18	52.51
756	2	EOC: Other PT Losses	52.35	33.33	71.36	71.36	33.33
759	0	EOC: Other PT Losses	-34.58	14.11	-83.29	-83.28	14.12
759	1	EOC: Other PT Losses	-34.58	-32.92	-36.26	-36.25	-32.91
759	2	EOC: Other PT Losses	-34.58	-79.95	10.78	10.78	-79.94
762	0	EOC: Other PT Losses	54.93	76.80	33.05	33.06	76.80
762	1	EOC: Other PT Losses	54.93	54.95	54.91	54.91	54.95
762	2	EOC: Other PT Losses	54.93	33.10	76.76	76.76	33.10
765	0	EOC: Other PT Losses	-36.90	12.55	-86.38	-86.36	12.57
765	1	EOC: Other PT Losses	-36.90	-37.01	-36.81	-36.80	-37.00
765	2	EOC: Other PT Losses	-36.90	-86.58	12.77	12.77	-86.58
768	0	EOC: Other PT Losses	62.71	100.43	24.98	25.00	100.44
768	1	EOC: Other PT Losses	62.71	66.66	58.76	58.77	66.67
768	2	EOC: Other PT Losses	62.71	32.89	92.54	92.53	32.89

			PT RELAXATION (PS)				
Member	Station	Result Case	(P/A) @ Centroid (kips/ft²)	Normal Stress @ Point 1 (kips/ft²)	Normal Stress @ Point 2 (kips/ft²)	Normal Stress @ Point 3 (kips/ft²)	Normal Stress @ Point 4 (kips/ft²)
705	0	EOC: Other PT Losses	-0.09	0.07	-0.24	-0.24	0.07
705	1	EOC: Other PT Losses	-0.09	-0.07	-0.10	-0.10	-0.07
705	2	EOC: Other PT Losses	-0.09	-0.21	0.04	0.04	-0.21
708	0	EOC: Other PT Losses	0.13	-1.41	1.66	1.66	-1.41
708	1	EOC: Other PT Losses	0.13	-0.01	0.26	0.26	-0.01
708	2	EOC: Other PT Losses	0.13	1.39	-1.14	-1.14	1.39
711	0	EOC: Other PT Losses	-0.42	-0.45	-0.38	-0.38	-0.45
711	1	EOC: Other PT Losses	-0.42	-0.48	-0.35	-0.35	-0.48
711	2	EOC: Other PT Losses	-0.42	-0.51	-0.32	-0.32	-0.51
714	0	EOC: Other PT Losses	0.28	-1.39	1.95	1.95	-1.39
714	1	EOC: Other PT Losses	0.28	0.22	0.34	0.34	0.22
714	2	EOC: Other PT Losses	0.28	1.83	-1.26	-1.26	1.83
717	0	EOC: Other PT Losses	-0.56	-0.46	-0.67	-0.67	-0.46
717	1	EOC: Other PT Losses	-0.56	-0.65	-0.47	-0.47	-0.65
717	2	EOC: Other PT Losses	-0.56	-0.84	-0.28	-0.28	-0.84
720	0	EOC: Other PT Losses	0.42	1.82	-0.97	-0.97	1.82
720	1	EOC: Other PT Losses	0.42	0.41	0.44	0.44	0.41
720	2	EOC: Other PT Losses	0.42	-0.99	1.84	1.84	-0.99
723	0	EOC: Other PT Losses	-0.62	-0.37	-0.86	-0.86	-0.37
723	1	EOC: Other PT Losses	-0.62	-0.74	-0.49	-0.49	-0.74
723	2	EOC: Other PT Losses	-0.62	-1.11	-0.12	-0.12	-1.11
726	0	EOC: Other PT Losses	0.64	1.29	0.00	0.00	1.29
726	1	EOC: Other PT Losses	0.64	0.52	0.76	0.76	0.52
726	2	EOC: Other PT Losses	0.64	-0.24	1.53	1.53	-0.24
729	0	EOC: Other PT Losses	-0.63	0.03	-1.29	-1.29	0.03
729	1	EOC: Other PT Losses	-0.63	-0.79	-0.48	-0.48	-0.79
729	2	EOC: Other PT Losses	-0.63	-1.61	0.34	0.34	-1.61
732	0	EOC: Other PT Losses	1.02	1.56	0.49	0.49	1.56
732	1	EOC: Other PT Losses	1.02	1.04	1.01	1.01	1.04
732	2	EOC: Other PT Losses	1.02	0.52	1.53	1.53	0.52
741	0	EOC: Other PT Losses	1.55	1.82	1.28	1.28	1.82
741	1	EOC: Other PT Losses	1.55	1.55	1.56	1.56	1.55
741	2	EOC: Other PT Losses	1.55	1.27	1.84	1.84	1.27
744	0	EOC: Other PT Losses	-0.86	-0.96	-0.76	-0.76	-0.96
744	1	EOC: Other PT Losses	-0.86	-0.86	-0.86	-0.86	-0.86
744	2	EOC: Other PT Losses	-0.86	-0.76	-0.96	-0.96	-0.76
747	0	EOC: Other PT Losses	0.59	0.00	1.18	1.18	0.00
747	1	EOC: Other PT Losses	0.59	0.63	0.54	0.54	0.63
747	2	EOC: Other PT Losses	0.59	1.27	-0.09	-0.09	1.27
750	0	EOC: Other PT Losses	-0.76	-1.01	-0.50	-0.50	-1.01
750	1	EOC: Other PT Losses	-0.76	-0.73	-0.78	-0.78	-0.73
750	2	EOC: Other PT Losses	-0.76	-0.46	-1.05	-1.05	-0.46
753	0	EOC: Other PT Losses	0.56	-0.11	1.23	1.23	-0.11
753	1	EOC: Other PT Losses	0.56	0.54	0.59	0.59	0.54
753	2	EOC: Other PT Losses	0.56	1.18	-0.06	-0.06	1.18
756	0	EOC: Other PT Losses	-0.67	-0.89	-0.45	-0.45	-0.89
756	1	EOC: Other PT Losses	-0.67	-0.64	-0.70	-0.70	-0.65
756	2	EOC: Other PT Losses	-0.67	-0.40	-0.95	-0.95	-0.40
759	0	EOC: Other PT Losses	0.45	-0.13	1.03	1.03	-0.14
759	1	EOC: Other PT Losses	0.45	0.43	0.47	0.47	0.43
759	2	EOC: Other PT Losses	0.45	0.99	-0.10	-0.10	0.99
762	0	EOC: Other PT Losses	-0.47	-0.64	-0.31	-0.31	-0.64
762	1	EOC: Other PT Losses	-0.47	-0.42	-0.53	-0.53	-0.42
762	2	EOC: Other PT Losses	-0.47	-0.21	-0.74	-0.74	-0.21
765	0	EOC: Other PT Losses	0.36	-0.08	0.80	0.80	-0.08
765	1	EOC: Other PT Losses	0.36	0.36	0.36	0.36	0.36
765	2	EOC: Other PT Losses	0.36	0.79	-0.07	-0.07	0.79
768	0	EOC: Other PT Losses	-0.23	-0.44	-0.02	-0.02	-0.44
768	1	EOC: Other PT Losses	-0.23	-0.21	-0.25	-0.25	-0.21
768	2	EOC: Other PT Losses	-0.23	0.02	-0.48	-0.48	0.02

			OTHER PT LOSSES (PS)				
Member	Station	Result Case	(P/A) @ Centroid (kips/ft²)	Normal Stress @ Point 1 (kips/ft²)	Normal Stress @ Point 2 (kips/ft²)	Normal Stress @ Point 3 (kips/ft²)	Normal Stress @ Point 4 (kips/ft²)
705	0	EOC: Other PT Losses	-0.62	0.24	-1.48	-1.48	0.24
705	1	EOC: Other PT Losses	-0.62	-0.26	-0.97	-0.97	-0.26
705	2	EOC: Other PT Losses	-0.62	-0.77	-0.46	-0.46	-0.77
708	0	EOC: Other PT Losses	0.58	-4.87	6.04	6.04	-4.87
708	1	EOC: Other PT Losses	0.58	0.03	1.14	1.14	0.03
708	2	EOC: Other PT Losses	0.58	4.93	-3.77	-3.77	4.93
711	0	EOC: Other PT Losses	-1.66	-1.41	-1.91	-1.91	-1.41
711	1	EOC: Other PT Losses	-1.66	-1.43	-1.90	-1.90	-1.43
711	2	EOC: Other PT Losses	-1.66	-1.44	-1.89	-1.89	-1.44
714	0	EOC: Other PT Losses	1.11	-5.32	7.53	7.53	-5.32
714	1	EOC: Other PT Losses	1.11	0.94	1.27	1.27	0.94
714	2	EOC: Other PT Losses	1.11	7.20	-4.99	-4.99	7.20
717	0	EOC: Other PT Losses	-2.18	-1.38	-2.98	-2.98	-1.38
717	1	EOC: Other PT Losses	-2.18	-2.12	-2.24	-2.24	-2.12
717	2	EOC: Other PT Losses	-2.18	-2.85	-1.50	-1.50	-2.85
720	0	EOC: Other PT Losses	1.45	6.56	-3.66	-3.66	6.56
720	1	EOC: Other PT Losses	1.45	1.58	1.32	1.32	1.58
720	2	EOC: Other PT Losses	1.45	-3.40	6.30	6.30	-3.40
723	0	EOC: Other PT Losses	-2.10	-0.92	-3.27	-3.27	-0.92
723	1	EOC: Other PT Losses	-2.10	-2.31	-1.88	-1.88	-2.31
723	2	EOC: Other PT Losses	-2.10	-3.71	-0.48	-0.48	-3.71
726	0	EOC: Other PT Losses	1.89	4.09	-0.31	-0.31	4.09
726	1	EOC: Other PT Losses	1.89	1.77	2.01	2.01	1.77
726	2	EOC: Other PT Losses	1.89	-0.56	4.33	4.33	-0.56
729	0	EOC: Other PT Losses	-1.81	0.30	-3.92	-3.92	0.30
729	1	EOC: Other PT Losses	-1.81	-2.36	-1.25	-1.25	-2.36
729	2	EOC: Other PT Losses	-1.81	-5.02	1.41	1.41	-5.02
732	0	EOC: Other PT Losses	2.67	3.83	1.50	1.50	3.83
732	1	EOC: Other PT Losses	2.67	2.73	2.60	2.60	2.73
732	2	EOC: Other PT Losses	2.67	1.63	3.70	3.70	1.63
741	0	EOC: Other PT Losses	4.87	5.76	3.98	3.98	5.76
741	1	EOC: Other PT Losses	4.87	4.64	5.10	5.10	4.64
741	2	EOC: Other PT Losses	4.87	3.53	6.21	6.21	3.53
744	0	EOC: Other PT Losses	-2.95	-3.27	-2.63	-2.63	-3.27
744	1	EOC: Other PT Losses	-2.95	-2.70	-3.20	-3.20	-2.70
744	2	EOC: Other PT Losses	-2.95	-2.12	-3.78	-3.78	-2.12
747	0	EOC: Other PT Losses	2.02	-0.26	4.30	4.30	-0.26
747	1	EOC: Other PT Losses	2.02	2.18	1.86	1.86	2.18
747	2	EOC: Other PT Losses	2.02	4.62	-0.58	-0.58	4.62
750	0	EOC: Other PT Losses	-2.71	-3.45	-1.97	-1.97	-3.45
750	1	EOC: Other PT Losses	-2.71	-2.51	-2.91	-2.91	-2.51
750	2	EOC: Other PT Losses	-2.71	-1.56	-3.86	-3.86	-1.56
753	0	EOC: Other PT Losses	2.01	-0.66	4.69	4.69	-0.66
753	1	EOC: Other PT Losses	2.01	2.00	2.03	2.03	2.00
753	2	EOC: Other PT Losses	2.01	4.65	-0.63	-0.63	4.65
756	0	EOC: Other PT Losses	-2.55	-3.24	-1.85	-1.85	-3.24
756	1	EOC: Other PT Losses	-2.55	-2.25	-2.84	-2.84	-2.25
756	2	EOC: Other PT Losses	-2.55	-1.26	-3.83	-3.83	-1.26
759	0	EOC: Other PT Losses	1.67	-0.71	4.05	4.05	-0.71
759	1	EOC: Other PT Losses	1.67	1.64	1.70	1.70	1.64
759	2	EOC: Other PT Losses	1.67	3.98	-0.64	-0.64	3.98
762	0	EOC: Other PT Losses	-1.93	-2.40	-1.46	-1.47	-2.40
762	1	EOC: Other PT Losses	-1.93	-1.56	-2.30	-2.30	-1.56
762	2	EOC: Other PT Losses	-1.93	-0.72	-3.14	-3.14	-0.72
765	0	EOC: Other PT Losses	1.56	-0.33	3.46	3.46	-0.33
765	1	EOC: Other PT Losses	1.56	1.83	1.30	1.30	1.83
765	2	EOC: Other PT Losses	1.56	3.99	-0.86	-0.86	3.99
768	0	EOC: Other PT Losses	-1.27	-2.46	-0.09	-0.09	-2.46
768	1	EOC: Other PT Losses	-1.27	-1.03	-1.52	-1.52	-1.03
768	2	EOC: Other PT Losses	-1.27	0.41	-2.95	-2.95	0.41

			UTILITIES (DW)				
Member	Station	Result Case	(P/A) @ Centroid (kips/ft²)	Normal Stress @ Point 1 (kips/ft²)	Normal Stress @ Point 2 (kips/ft²)	Normal Stress @ Point 3 (kips/ft²)	Normal Stress @ Point 4 (kips/ft²)
705	0	EOC: Other PT Losses	-15.66	-23.19	-8.12	-8.12	-23.19
705	1	EOC: Other PT Losses	-15.66	-20.43	-10.88	-10.88	-20.43
705	2	EOC: Other PT Losses	-15.66	-17.67	-13.65	-13.64	-17.66
708	0	EOC: Other PT Losses	9.70	5.13	14.28	14.27	5.12
708	1	EOC: Other PT Losses	9.70	7.62	11.79	11.78	7.62
708	2	EOC: Other PT Losses	9.70	10.12	9.29	9.29	10.12
711	0	EOC: Other PT Losses	-4.76	-6.55	-2.97	-2.97	-6.55
711	1	EOC: Other PT Losses	-4.76	-5.78	-3.75	-3.75	-5.77
711	2	EOC: Other PT Losses	-4.76	-5.00	-4.53	-4.53	-5.00
714	0	EOC: Other PT Losses	3.87	4.34	3.41	3.41	4.33
714	1	EOC: Other PT Losses	3.87	4.11	3.64	3.64	4.11
714	2	EOC: Other PT Losses	3.87	3.88	3.87	3.87	3.88
717	0	EOC: Other PT Losses	5.66	4.16	7.17	7.17	4.16
717	1	EOC: Other PT Losses	5.66	4.80	6.53	6.53	4.80
717	2	EOC: Other PT Losses	5.66	5.44	5.89	5.89	5.44
720	0	EOC: Other PT Losses	-0.57	-5.80	4.67	4.66	-5.81
720	1	EOC: Other PT Losses	-0.57	-0.74	-0.40	-0.40	-0.74
720	2	EOC: Other PT Losses	-0.57	4.33	-5.47	-5.46	4.33
723	0	EOC: Other PT Losses	13.24	11.92	14.56	14.57	11.92
723	1	EOC: Other PT Losses	13.24	12.92	13.57	13.57	12.92
723	2	EOC: Other PT Losses	13.24	13.92	12.57	12.57	13.92
726	0	EOC: Other PT Losses	-6.34	-11.21	-1.46	-1.46	-11.22
726	1	EOC: Other PT Losses	-6.34	-7.11	-5.57	-5.57	-7.11
726	2	EOC: Other PT Losses	-6.34	-3.01	-9.68	-9.67	-3.00
729	0	EOC: Other PT Losses	15.72	17.96	13.49	13.49	17.96
729	1	EOC: Other PT Losses	15.72	16.29	15.15	15.15	16.29
729	2	EOC: Other PT Losses	15.72	14.63	16.82	16.82	14.63
732	0	EOC: Other PT Losses	-13.93	-13.94	-13.92	-13.92	-13.94
732	1	EOC: Other PT Losses	-13.93	-14.34	-13.51	-13.51	-14.35
732	2	EOC: Other PT Losses	-13.93	-14.75	-13.10	-13.11	-14.75
741	0	EOC: Other PT Losses	-2.82	-4.98	-0.65	-0.66	-4.98
741	1	EOC: Other PT Losses	-2.82	-3.13	-2.50	-2.50	-3.14
741	2	EOC: Other PT Losses	-2.82	-1.29	-4.35	-4.35	-1.29
744	0	EOC: Other PT Losses	6.39	3.85	8.94	8.94	3.84
744	1	EOC: Other PT Losses	6.39	5.57	7.22	7.21	5.57
744	2	EOC: Other PT Losses	6.39	7.30	5.49	5.48	7.30
747	0	EOC: Other PT Losses	1.47	-0.17	3.12	3.12	-0.17
747	1	EOC: Other PT Losses	1.47	0.07	2.88	2.88	0.07
747	2	EOC: Other PT Losses	1.47	0.31	2.64	2.64	0.31
750	0	EOC: Other PT Losses	3.51	5.00	2.02	2.01	5.00
750	1	EOC: Other PT Losses	3.51	3.64	3.38	3.38	3.63
750	2	EOC: Other PT Losses	3.51	2.27	4.75	4.75	2.27
753	0	EOC: Other PT Losses	-0.43	1.77	-2.63	-2.64	1.77
753	1	EOC: Other PT Losses	-0.43	-0.13	-0.74	-0.74	-0.13
753	2	EOC: Other PT Losses	-0.43	-2.02	1.15	1.15	-2.02
756	0	EOC: Other PT Losses	4.90	5.85	3.95	3.94	5.85
756	1	EOC: Other PT Losses	4.90	5.07	4.73	4.72	5.07
756	2	EOC: Other PT Losses	4.90	4.29	5.51	5.51	4.28
759	0	EOC: Other PT Losses	-0.18	1.72	-2.07	-2.07	1.72
759	1	EOC: Other PT Losses	-0.18	-0.11	-0.24	-0.24	-0.11
759	2	EOC: Other PT Losses	-0.18	-1.94	1.59	1.59	-1.94
762	0	EOC: Other PT Losses	4.01	4.72	3.31	3.30	4.71
762	1	EOC: Other PT Losses	4.01	3.90	4.12	4.12	3.90
762	2	EOC: Other PT Losses	4.01	3.08	4.94	4.94	3.08
765	0	EOC: Other PT Losses	-1.16	0.13	-2.44	-2.45	0.13
765	1	EOC: Other PT Losses	-1.16	-1.21	-1.10	-1.11	-1.21
765	2	EOC: Other PT Losses	-1.16	-2.55	0.24	0.23	-2.55
768	0	EOC: Other PT Losses	4.25	7.63	0.87	0.86	7.63
768	1	EOC: Other PT Losses	4.25	5.31	3.20	3.19	5.30
768	2	EOC: Other PT Losses	4.25	2.98	5.52	5.52	2.97

			LIVE LOAD ON FULL LENGTH OF BRIDGE (LL1)				
Member	Station	Result Case	(P/A) @ Centroid (kips/ft²)	Normal Stress @ Point 1 (kips/ft²)	Normal Stress @ Point 2 (kips/ft²)	Normal Stress @ Point 3 (kips/ft²)	Normal Stress @ Point 4 (kips/ft²)
705	0	EOC: Other PT Losses	-57.27	-84.83	-29.70	-29.72	-84.85
705	1	EOC: Other PT Losses	-57.27	-74.73	-39.81	-39.81	-74.74
705	2	EOC: Other PT Losses	-57.27	-64.64	-49.92	-49.91	-64.62
708	0	EOC: Other PT Losses	35.50	18.78	52.26	52.22	18.74
708	1	EOC: Other PT Losses	35.50	27.89	43.12	43.11	27.88
708	2	EOC: Other PT Losses	35.50	37.01	33.99	34.00	37.02
711	0	EOC: Other PT Losses	-17.42	-23.97	-10.87	-10.88	-23.97
711	1	EOC: Other PT Losses	-17.42	-21.13	-13.72	-13.72	-21.13
711	2	EOC: Other PT Losses	-17.42	-18.29	-16.57	-16.56	-18.28
714	0	EOC: Other PT Losses	14.18	15.86	12.49	12.49	15.86
714	1	EOC: Other PT Losses	14.18	15.02	13.33	13.33	15.02
714	2	EOC: Other PT Losses	14.18	14.19	14.17	14.16	14.18
717	0	EOC: Other PT Losses	20.73	15.22	26.23	26.23	15.22
717	1	EOC: Other PT Losses	20.73	17.56	23.89	23.89	17.56
717	2	EOC: Other PT Losses	20.73	19.90	21.55	21.55	19.91
720	0	EOC: Other PT Losses	-2.08	-21.22	17.08	17.06	-21.24
720	1	EOC: Other PT Losses	-2.08	-2.69	-1.46	-1.46	-2.70
720	2	EOC: Other PT Losses	-2.08	15.84	-20.01	-19.99	15.85
723	0	EOC: Other PT Losses	48.45	43.60	53.28	53.29	43.61
723	1	EOC: Other PT Losses	48.45	47.26	49.63	49.63	47.26
723	2	EOC: Other PT Losses	48.45	50.92	45.98	45.97	50.91
726	0	EOC: Other PT Losses	-23.19	-41.02	-5.34	-5.36	-41.05
726	1	EOC: Other PT Losses	-23.19	-26.01	-20.37	-20.37	-26.02
726	2	EOC: Other PT Losses	-23.19	-10.99	-35.40	-35.39	-10.98
729	0	EOC: Other PT Losses	57.52	65.69	49.34	49.35	65.71
729	1	EOC: Other PT Losses	57.52	59.61	55.44	55.44	59.61
729	2	EOC: Other PT Losses	57.52	53.53	61.54	61.52	53.51
732	0	EOC: Other PT Losses	-50.96	-50.98	-50.92	-50.93	-51.00
732	1	EOC: Other PT Losses	-50.96	-52.48	-49.43	-49.44	-52.49
732	2	EOC: Other PT Losses	-50.96	-53.97	-47.94	-47.95	-53.97
741	0	EOC: Other PT Losses	-10.31	-18.22	-2.39	-2.41	-18.24
741	1	EOC: Other PT Losses	-10.31	-11.47	-9.15	-9.16	-11.48
741	2	EOC: Other PT Losses	-10.31	-4.71	-15.91	-15.92	-4.72
744	0	EOC: Other PT Losses	23.39	14.07	32.72	32.70	14.06
744	1	EOC: Other PT Losses	23.39	20.39	26.40	26.38	20.38
744	2	EOC: Other PT Losses	23.39	26.71	20.08	20.07	26.69
747	0	EOC: Other PT Losses	5.40	-0.62	11.42	11.41	-0.62
747	1	EOC: Other PT Losses	5.40	0.25	10.55	10.54	0.25
747	2	EOC: Other PT Losses	5.40	1.12	9.68	9.67	1.12
750	0	EOC: Other PT Losses	12.83	18.30	7.39	7.37	18.28
750	1	EOC: Other PT Losses	12.83	13.30	12.38	12.37	13.28
750	2	EOC: Other PT Losses	12.83	8.30	17.38	17.37	8.29
753	0	EOC: Other PT Losses	-1.59	6.47	-9.64	-9.65	6.46
753	1	EOC: Other PT Losses	-1.59	-0.46	-2.71	-2.72	-0.47
753	2	EOC: Other PT Losses	-1.59	-7.39	4.22	4.21	-7.40
756	0	EOC: Other PT Losses	17.91	21.41	14.44	14.42	21.39
756	1	EOC: Other PT Losses	17.91	18.55	17.30	17.28	18.53
756	2	EOC: Other PT Losses	17.91	15.69	20.16	20.14	15.67
759	0	EOC: Other PT Losses	-0.64	6.30	-7.57	-7.59	6.29
759	1	EOC: Other PT Losses	-0.64	-0.40	-0.87	-0.89	-0.41
759	2	EOC: Other PT Losses	-0.64	-7.10	5.83	5.82	-7.11
762	0	EOC: Other PT Losses	14.67	17.26	12.09	12.07	17.24
762	1	EOC: Other PT Losses	14.67	14.27	15.08	15.07	14.25
762	2	EOC: Other PT Losses	14.67	11.27	18.07	18.06	11.26
765	0	EOC: Other PT Losses	-4.23	0.49	-8.93	-8.95	0.47
765	1	EOC: Other PT Losses	-4.23	-4.41	-4.03	-4.05	-4.43
765	2	EOC: Other PT Losses	-4.23	-9.31	0.87	0.85	-9.33
768	0	EOC: Other PT Losses	15.54	27.93	3.18	3.16	27.90
768	1	EOC: Other PT Losses	15.54	19.41	11.69	11.67	19.39
768	2	EOC: Other PT Losses	15.54	10.90	20.20	20.19	10.88

			LIVE LOAD ON MAIN SPAN (LL2)				
Member	Station	Result Case	(P/A) @ Centroid (kips/ft²)	Normal Stress @ Point 1 (kips/ft²)	Normal Stress @ Point 2 (kips/ft²)	Normal Stress @ Point 3 (kips/ft²)	Normal Stress @ Point 4 (kips/ft²)
705	0	EOC: Other PT Losses	-67.10	-96.50	-37.66	-37.71	-96.55
705	1	EOC: Other PT Losses	-67.10	-85.99	-48.21	-48.22	-86.00
705	2	EOC: Other PT Losses	-67.10	-75.48	-58.76	-58.72	-75.44
708	0	EOC: Other PT Losses	39.84	17.21	62.62	62.47	17.06
708	1	EOC: Other PT Losses	39.84	30.88	48.86	48.80	30.82
708	2	EOC: Other PT Losses	39.84	44.55	35.10	35.13	44.58
711	0	EOC: Other PT Losses	-26.67	-34.19	-19.13	-19.15	-34.21
711	1	EOC: Other PT Losses	-26.67	-30.96	-22.39	-22.39	-30.95
711	2	EOC: Other PT Losses	-26.67	-27.72	-25.65	-25.63	-27.69
714	0	EOC: Other PT Losses	16.79	13.79	19.84	19.78	13.74
714	1	EOC: Other PT Losses	16.79	17.42	16.19	16.16	17.38
714	2	EOC: Other PT Losses	16.79	21.04	12.54	12.53	21.03
717	0	EOC: Other PT Losses	15.29	8.85	21.74	21.74	8.84
717	1	EOC: Other PT Losses	15.29	11.44	19.13	19.14	11.45
717	2	EOC: Other PT Losses	15.29	14.03	16.53	16.55	14.05
720	0	EOC: Other PT Losses	-1.30	-19.59	16.99	16.99	-19.59
720	1	EOC: Other PT Losses	-1.30	-2.00	-0.62	-0.61	-1.99
720	2	EOC: Other PT Losses	-1.30	15.59	-18.22	-18.20	15.61
723	0	EOC: Other PT Losses	47.29	41.79	52.79	52.80	41.80
723	1	EOC: Other PT Losses	47.29	45.73	48.85	48.85	45.74
723	2	EOC: Other PT Losses	47.29	49.68	44.90	44.91	49.68
726	0	EOC: Other PT Losses	-25.65	-44.32	-6.96	-6.98	-44.34
726	1	EOC: Other PT Losses	-25.65	-29.03	-22.27	-22.27	-29.03
726	2	EOC: Other PT Losses	-25.65	-13.74	-37.57	-37.56	-13.73
729	0	EOC: Other PT Losses	59.80	68.96	50.62	50.65	68.98
729	1	EOC: Other PT Losses	59.80	61.75	57.85	57.86	61.76
729	2	EOC: Other PT Losses	59.80	54.54	65.08	65.07	54.53
732	0	EOC: Other PT Losses	-57.14	-57.40	-56.86	-56.88	-57.42
732	1	EOC: Other PT Losses	-57.14	-59.07	-55.20	-55.22	-59.08
732	2	EOC: Other PT Losses	-57.14	-60.73	-53.55	-53.55	-60.73
741	0	EOC: Other PT Losses	13.08	11.57	14.59	14.59	11.57
741	1	EOC: Other PT Losses	13.08	13.78	12.38	12.38	13.78
741	2	EOC: Other PT Losses	13.08	16.00	10.17	10.16	15.99
744	0	EOC: Other PT Losses	1.24	1.69	0.79	0.79	1.69
744	1	EOC: Other PT Losses	1.24	2.31	0.19	0.17	2.30
744	2	EOC: Other PT Losses	1.24	2.92	-0.42	-0.44	2.90
747	0	EOC: Other PT Losses	-0.25	0.66	-1.17	-1.17	0.66
747	1	EOC: Other PT Losses	-0.25	-0.94	0.43	0.43	-0.94
747	2	EOC: Other PT Losses	-0.25	-2.54	2.03	2.03	-2.53
750	0	EOC: Other PT Losses	11.32	15.99	6.65	6.65	15.99
750	1	EOC: Other PT Losses	11.32	12.98	9.67	9.66	12.97
750	2	EOC: Other PT Losses	11.32	9.97	12.69	12.67	9.95
753	0	EOC: Other PT Losses	-7.80	-0.09	-15.53	-15.52	-0.07
753	1	EOC: Other PT Losses	-7.80	-7.68	-7.93	-7.92	-7.67
753	2	EOC: Other PT Losses	-7.80	-15.28	-0.33	-0.33	-15.27
756	0	EOC: Other PT Losses	21.66	29.50	13.81	13.82	29.50
756	1	EOC: Other PT Losses	21.66	23.46	19.86	19.86	23.45
756	2	EOC: Other PT Losses	21.66	17.42	25.91	25.90	17.40
759	0	EOC: Other PT Losses	-14.72	-1.66	-27.81	-27.78	-1.63
759	1	EOC: Other PT Losses	-14.72	-14.51	-14.95	-14.93	-14.49
759	2	EOC: Other PT Losses	-14.72	-27.35	-2.09	-2.09	-27.35
762	0	EOC: Other PT Losses	29.75	41.18	18.31	18.32	41.20
762	1	EOC: Other PT Losses	29.75	31.53	27.97	27.97	31.53
762	2	EOC: Other PT Losses	29.75	21.88	37.64	37.62	21.87
765	0	EOC: Other PT Losses	-19.44	-2.04	-36.87	-36.83	-2.00
765	1	EOC: Other PT Losses	-19.44	-16.84	-22.05	-22.03	-16.82
765	2	EOC: Other PT Losses	-19.44	-31.65	-7.23	-7.22	-31.64
768	0	EOC: Other PT Losses	39.78	56.99	22.53	22.57	57.02
768	1	EOC: Other PT Losses	39.78	44.71	34.84	34.85	44.72
768	2	EOC: Other PT Losses	39.78	32.43	47.14	47.13	32.41

			LIVE LOAD ON BACK SPAN (LL3)				
Member	Station	Result Case	(P/A) @ Centroid (kips/ft²)	Normal Stress @ Point 1 (kips/ft²)	Normal Stress @ Point 2 (kips/ft²)	Normal Stress @ Point 3 (kips/ft²)	Normal Stress @ Point 4 (kips/ft²)
705	0	EOC: Other PT Losses	9.83	11.67	7.95	7.99	11.70
705	1	EOC: Other PT Losses	9.83	11.26	8.40	8.40	11.26
705	2	EOC: Other PT Losses	9.83	10.85	8.84	8.81	10.82
708	0	EOC: Other PT Losses	-4.34	1.57	-10.36	-10.25	1.68
708	1	EOC: Other PT Losses	-4.34	-2.98	-5.73	-5.69	-2.94
708	2	EOC: Other PT Losses	-4.34	-7.54	-1.11	-1.13	-7.57
711	0	EOC: Other PT Losses	9.25	10.22	8.26	8.28	10.24
711	1	EOC: Other PT Losses	9.25	9.83	8.67	8.67	9.83
711	2	EOC: Other PT Losses	9.25	9.43	9.08	9.07	9.41
714	0	EOC: Other PT Losses	-2.61	2.07	-7.35	-7.29	2.12
714	1	EOC: Other PT Losses	-2.61	-2.39	-2.86	-2.83	-2.37
714	2	EOC: Other PT Losses	-2.61	-6.86	1.63	1.63	-6.85
717	0	EOC: Other PT Losses	5.43	6.37	4.49	4.50	6.37
717	1	EOC: Other PT Losses	5.43	6.12	4.75	4.75	6.11
717	2	EOC: Other PT Losses	5.43	5.87	5.01	5.00	5.85
720	0	EOC: Other PT Losses	-0.78	-1.63	0.09	0.08	-1.65
720	1	EOC: Other PT Losses	-0.78	-0.69	-0.84	-0.86	-0.71
720	2	EOC: Other PT Losses	-0.78	0.24	-1.78	-1.79	0.23
723	0	EOC: Other PT Losses	1.15	1.82	0.49	0.49	1.81
723	1	EOC: Other PT Losses	1.15	1.53	0.78	0.78	1.52
723	2	EOC: Other PT Losses	1.15	1.24	1.07	1.06	1.23
726	0	EOC: Other PT Losses	2.46	3.30	1.62	1.62	3.30
726	1	EOC: Other PT Losses	2.46	3.02	1.90	1.90	3.02
726	2	EOC: Other PT Losses	2.46	2.75	2.18	2.17	2.74
729	0	EOC: Other PT Losses	-2.28	-3.27	-1.29	-1.29	-3.27
729	1	EOC: Other PT Losses	-2.28	-2.14	-2.41	-2.42	-2.15
729	2	EOC: Other PT Losses	-2.28	-1.01	-3.54	-3.55	-1.02
732	0	EOC: Other PT Losses	6.18	6.41	5.95	5.95	6.42
732	1	EOC: Other PT Losses	6.18	6.59	5.77	5.78	6.59
732	2	EOC: Other PT Losses	6.18	6.76	5.60	5.60	6.76
741	0	EOC: Other PT Losses	-23.39	-29.79	-16.98	-17.00	-29.81
741	1	EOC: Other PT Losses	-23.39	-25.25	-21.53	-21.54	-25.26
741	2	EOC: Other PT Losses	-23.39	-20.71	-26.08	-26.08	-20.71
744	0	EOC: Other PT Losses	22.15	12.38	31.92	31.91	12.37
744	1	EOC: Other PT Losses	22.15	18.08	26.21	26.21	18.08
744	2	EOC: Other PT Losses	22.15	23.79	20.51	20.50	23.79
747	0	EOC: Other PT Losses	5.65	-1.28	12.59	12.58	-1.29
747	1	EOC: Other PT Losses	5.65	1.19	10.12	10.11	1.18
747	2	EOC: Other PT Losses	5.65	3.66	7.65	7.64	3.65
750	0	EOC: Other PT Losses	1.52	2.31	0.74	0.72	2.30
750	1	EOC: Other PT Losses	1.52	0.32	2.72	2.71	0.32
750	2	EOC: Other PT Losses	1.52	-1.66	4.69	4.70	-1.66
753	0	EOC: Other PT Losses	6.21	6.56	5.89	5.87	6.53
753	1	EOC: Other PT Losses	6.21	7.22	5.22	5.20	7.20
753	2	EOC: Other PT Losses	6.21	7.89	4.55	4.54	7.87
756	0	EOC: Other PT Losses	-3.74	-8.09	0.63	0.61	-8.11
756	1	EOC: Other PT Losses	-3.74	-4.91	-2.56	-2.57	-4.92
756	2	EOC: Other PT Losses	-3.74	-1.73	-5.76	-5.75	-1.73
759	0	EOC: Other PT Losses	14.08	7.96	20.24	20.20	7.92
759	1	EOC: Other PT Losses	14.08	14.11	14.08	14.05	14.08
759	2	EOC: Other PT Losses	14.08	20.26	7.92	7.90	20.24
762	0	EOC: Other PT Losses	-15.09	-23.92	-6.22	-6.25	-23.96
762	1	EOC: Other PT Losses	-15.09	-17.26	-12.89	-12.91	-17.28
762	2	EOC: Other PT Losses	-15.09	-10.61	-19.57	-19.56	-10.61
765	0	EOC: Other PT Losses	15.21	2.53	27.94	27.88	2.47
765	1	EOC: Other PT Losses	15.21	12.44	18.02	17.98	12.39
765	2	EOC: Other PT Losses	15.21	22.34	8.10	8.08	22.31
768	0	EOC: Other PT Losses	-24.24	-29.06	-19.35	-19.41	-29.12
768	1	EOC: Other PT Losses	-24.24	-25.30	-23.15	-23.18	-25.33
768	2	EOC: Other PT Losses	-24.24	-21.53	-26.94	-26.94	-21.53

			TEMPERATURE RISE (TU+)				
Member	Station	Result Case	(P/A) @ Centroid (kips/ft²)	Normal Stress @ Point 1 (kips/ft²)	Normal Stress @ Point 2 (kips/ft²)	Normal Stress @ Point 3 (kips/ft²)	Normal Stress @ Point 4 (kips/ft²)
705	0	EOC: Other PT Losses	-31.80	-34.21	-29.40	-29.40	-34.20
705	1	EOC: Other PT Losses	-31.80	-35.20	-28.41	-28.41	-35.20
705	2	EOC: Other PT Losses	-31.80	-36.18	-27.42	-27.42	-36.19
708	0	EOC: Other PT Losses	9.14	-8.71	26.97	26.99	-8.69
708	1	EOC: Other PT Losses	9.14	5.32	12.96	12.96	5.33
708	2	EOC: Other PT Losses	9.14	19.35	-1.06	-1.07	19.34
711	0	EOC: Other PT Losses	-21.54	-25.56	-17.51	-17.51	-25.56
711	1	EOC: Other PT Losses	-21.54	-23.53	-19.53	-19.54	-23.54
711	2	EOC: Other PT Losses	-21.54	-21.51	-21.56	-21.56	-21.51
714	0	EOC: Other PT Losses	2.24	-4.85	9.32	9.34	-4.84
714	1	EOC: Other PT Losses	2.24	2.69	1.79	1.80	2.70
714	2	EOC: Other PT Losses	2.24	10.23	-5.74	-5.74	10.23
717	0	EOC: Other PT Losses	-4.95	-6.85	-3.05	-3.06	-6.85
717	1	EOC: Other PT Losses	-4.95	-6.30	-3.60	-3.61	-6.30
717	2	EOC: Other PT Losses	-4.95	-5.75	-4.15	-4.16	-5.75
720	0	EOC: Other PT Losses	-4.26	-4.81	-3.70	-3.72	-4.82
720	1	EOC: Other PT Losses	-4.26	-4.57	-3.95	-3.95	-4.58
720	2	EOC: Other PT Losses	-4.26	-4.34	-4.19	-4.19	-4.34
723	0	EOC: Other PT Losses	7.92	5.87	9.97	9.96	5.87
723	1	EOC: Other PT Losses	7.92	7.41	8.43	8.42	7.41
723	2	EOC: Other PT Losses	7.92	8.96	6.89	6.88	8.95
726	0	EOC: Other PT Losses	-17.14	-27.16	-7.10	-7.11	-27.17
726	1	EOC: Other PT Losses	-17.14	-21.01	-13.26	-13.26	-21.02
726	2	EOC: Other PT Losses	-17.14	-14.86	-19.41	-19.41	-14.86
729	0	EOC: Other PT Losses	13.54	26.15	0.93	0.93	26.14
729	1	EOC: Other PT Losses	13.54	17.27	9.81	9.81	17.26
729	2	EOC: Other PT Losses	13.54	8.39	18.69	18.68	8.38
732	0	EOC: Other PT Losses	-62.93	-50.35	-75.51	-75.51	-50.35
732	1	EOC: Other PT Losses	-62.93	-64.36	-61.50	-61.50	-64.37
732	2	EOC: Other PT Losses	-62.93	-78.37	-47.49	-47.49	-78.38
741	0	EOC: Other PT Losses	-69.05	-58.34	-79.74	-79.75	-58.36
741	1	EOC: Other PT Losses	-69.05	-69.63	-68.46	-68.46	-69.64
741	2	EOC: Other PT Losses	-69.05	-80.92	-57.17	-57.18	-80.92
744	0	EOC: Other PT Losses	19.85	29.68	10.02	10.02	29.68
744	1	EOC: Other PT Losses	19.85	19.92	19.78	19.77	19.91
744	2	EOC: Other PT Losses	19.85	10.16	29.54	29.53	10.15
747	0	EOC: Other PT Losses	-18.08	-3.89	-32.26	-32.26	-3.89
747	1	EOC: Other PT Losses	-18.08	-15.55	-20.60	-20.60	-15.56
747	2	EOC: Other PT Losses	-18.08	-27.21	-8.93	-8.94	-27.22
750	0	EOC: Other PT Losses	9.66	10.60	8.72	8.71	10.60
750	1	EOC: Other PT Losses	9.66	7.87	11.45	11.44	7.87
750	2	EOC: Other PT Losses	9.66	5.15	14.17	14.17	5.14
753	0	EOC: Other PT Losses	-5.65	-3.76	-7.53	-7.53	-3.77
753	1	EOC: Other PT Losses	-5.65	-5.28	-6.01	-6.02	-5.28
753	2	EOC: Other PT Losses	-5.65	-6.79	-4.50	-4.50	-6.80
756	0	EOC: Other PT Losses	-6.82	-10.24	-3.38	-3.39	-10.25
756	1	EOC: Other PT Losses	-6.82	-8.93	-4.70	-4.70	-8.94
756	2	EOC: Other PT Losses	-6.82	-7.62	-6.02	-6.02	-7.62
759	0	EOC: Other PT Losses	4.56	-1.62	10.76	10.74	-1.64
759	1	EOC: Other PT Losses	4.56	5.16	3.97	3.96	5.15
759	2	EOC: Other PT Losses	4.56	11.94	-2.81	-2.82	11.93
762	0	EOC: Other PT Losses	-25.29	-36.61	-13.95	-13.97	-36.62
762	1	EOC: Other PT Losses	-25.29	-28.44	-22.13	-22.14	-28.45
762	2	EOC: Other PT Losses	-25.29	-20.27	-30.31	-30.31	-20.27
765	0	EOC: Other PT Losses	13.48	-3.89	30.88	30.85	-3.91
765	1	EOC: Other PT Losses	13.48	11.00	15.99	15.97	10.98
765	2	EOC: Other PT Losses	13.48	25.89	1.09	1.08	25.88
768	0	EOC: Other PT Losses	-50.46	-69.98	-30.93	-30.95	-70.00
768	1	EOC: Other PT Losses	-50.46	-56.73	-44.19	-44.20	-56.74
768	2	EOC: Other PT Losses	-50.46	-43.48	-57.45	-57.45	-43.48

			TEMPERATURE FALL (TU-)				
Member	Station	Result Case	(P/A) @ Centroid (kips/ft²)	Normal Stress @ Point 1 (kips/ft²)	Normal Stress @ Point 2 (kips/ft²)	Normal Stress @ Point 3 (kips/ft²)	Normal Stress @ Point 4 (kips/ft²)
705	0	EOC: Other PT Losses	31.80	34.21	29.40	29.40	34.20
705	1	EOC: Other PT Losses	31.80	35.20	28.41	28.41	35.20
705	2	EOC: Other PT Losses	31.80	36.18	27.42	27.42	36.19
708	0	EOC: Other PT Losses	-9.14	8.71	-26.97	-26.99	8.69
708	1	EOC: Other PT Losses	-9.14	-5.32	-12.96	-12.96	-5.33
708	2	EOC: Other PT Losses	-9.14	-19.35	1.06	1.07	-19.34
711	0	EOC: Other PT Losses	21.54	25.56	17.51	17.51	25.56
711	1	EOC: Other PT Losses	21.54	23.53	19.53	19.54	23.54
711	2	EOC: Other PT Losses	21.54	21.51	21.56	21.56	21.51
714	0	EOC: Other PT Losses	-2.24	4.85	-9.32	-9.34	4.84
714	1	EOC: Other PT Losses	-2.24	-2.69	-1.79	-1.80	-2.70
714	2	EOC: Other PT Losses	-2.24	-10.23	5.74	5.74	-10.23
717	0	EOC: Other PT Losses	4.95	6.85	3.05	3.06	6.85
717	1	EOC: Other PT Losses	4.95	6.30	3.60	3.61	6.30
717	2	EOC: Other PT Losses	4.95	5.75	4.15	4.16	5.75
720	0	EOC: Other PT Losses	4.26	4.81	3.70	3.72	4.82
720	1	EOC: Other PT Losses	4.26	4.57	3.95	3.95	4.58
720	2	EOC: Other PT Losses	4.26	4.34	4.19	4.19	4.34
723	0	EOC: Other PT Losses	-7.92	-5.87	-9.97	-9.96	-5.87
723	1	EOC: Other PT Losses	-7.92	-7.41	-8.43	-8.42	-7.41
723	2	EOC: Other PT Losses	-7.92	-8.96	-6.89	-6.88	-8.95
726	0	EOC: Other PT Losses	17.14	27.16	7.10	7.11	27.17
726	1	EOC: Other PT Losses	17.14	21.01	13.26	13.26	21.02
726	2	EOC: Other PT Losses	17.14	14.86	19.41	19.41	14.86
729	0	EOC: Other PT Losses	-13.54	-26.15	-0.93	-0.93	-26.14
729	1	EOC: Other PT Losses	-13.54	-17.27	-9.81	-9.81	-17.26
729	2	EOC: Other PT Losses	-13.54	-8.39	-18.69	-18.68	-8.38
732	0	EOC: Other PT Losses	62.93	50.35	75.51	75.51	50.35
732	1	EOC: Other PT Losses	62.93	64.36	61.50	61.50	64.37
732	2	EOC: Other PT Losses	62.93	78.37	47.49	47.49	78.38
741	0	EOC: Other PT Losses	69.05	58.34	79.74	79.75	58.36
741	1	EOC: Other PT Losses	69.05	69.63	68.46	68.46	69.64
741	2	EOC: Other PT Losses	69.05	80.92	57.17	57.18	80.92
744	0	EOC: Other PT Losses	-19.85	-29.68	-10.02	-10.02	-29.68
744	1	EOC: Other PT Losses	-19.85	-19.92	-19.78	-19.77	-19.91
744	2	EOC: Other PT Losses	-19.85	-10.16	-29.54	-29.53	-10.15
747	0	EOC: Other PT Losses	18.08	3.89	32.26	32.26	3.89
747	1	EOC: Other PT Losses	18.08	15.55	20.60	20.60	15.56
747	2	EOC: Other PT Losses	18.08	27.21	8.93	8.94	27.22
750	0	EOC: Other PT Losses	-9.66	-10.60	-8.72	-8.71	-10.60
750	1	EOC: Other PT Losses	-9.66	-7.87	-11.45	-11.44	-7.87
750	2	EOC: Other PT Losses	-9.66	-5.15	-14.17	-14.17	-5.14
753	0	EOC: Other PT Losses	5.65	3.76	7.53	7.53	3.77
753	1	EOC: Other PT Losses	5.65	5.28	6.01	6.02	5.28
753	2	EOC: Other PT Losses	5.65	6.79	4.50	4.50	6.80
756	0	EOC: Other PT Losses	6.82	10.24	3.38	3.39	10.25
756	1	EOC: Other PT Losses	6.82	8.93	4.70	4.70	8.94
756	2	EOC: Other PT Losses	6.82	7.62	6.02	6.02	7.62
759	0	EOC: Other PT Losses	-4.56	1.62	-10.76	-10.74	1.64
759	1	EOC: Other PT Losses	-4.56	-5.16	-3.97	-3.96	-5.15
759	2	EOC: Other PT Losses	-4.56	-11.94	2.81	2.82	-11.93
762	0	EOC: Other PT Losses	25.29	36.61	13.95	13.97	36.62
762	1	EOC: Other PT Losses	25.29	28.44	22.13	22.14	28.45
762	2	EOC: Other PT Losses	25.29	20.27	30.31	30.31	20.27
765	0	EOC: Other PT Losses	-13.48	3.89	-30.88	-30.85	3.91
765	1	EOC: Other PT Losses	-13.48	-11.00	-15.99	-15.97	-10.98
765	2	EOC: Other PT Losses	-13.48	-25.89	-1.09	-1.08	-25.88
768	0	EOC: Other PT Losses	50.46	69.98	30.93	30.95	70.00
768	1	EOC: Other PT Losses	50.46	56.73	44.19	44.20	56.74
768	2	EOC: Other PT Losses	50.46	43.48	57.45	57.45	43.48

			TEMPERATURE RISE + TEMP. DIFFERENTIAL				
Member	Station	Result Case	(P/A) @ Centroid (kips/ft²)	Normal Stress @ Point 1 (kips/ft²)	Normal Stress @ Point 2 (kips/ft²)	Normal Stress @ Point 3 (kips/ft²)	Normal Stress @ Point 4 (kips/ft²)
705	0	EOC: Other PT Losses	-64.53	-74.04	-55.03	-55.02	-74.03
705	1	EOC: Other PT Losses	-64.53	-73.31	-55.74	-55.75	-73.32
705	2	EOC: Other PT Losses	-64.53	-72.58	-56.46	-56.48	-72.60
708	0	EOC: Other PT Losses	16.78	-15.77	49.31	49.34	-15.74
708	1	EOC: Other PT Losses	16.78	9.51	24.05	24.05	9.52
708	2	EOC: Other PT Losses	16.78	34.80	-1.21	-1.23	34.78
711	0	EOC: Other PT Losses	-38.27	-45.59	-30.94	-30.94	-45.59
711	1	EOC: Other PT Losses	-38.27	-41.92	-34.61	-34.61	-41.93
711	2	EOC: Other PT Losses	-38.27	-38.25	-38.27	-38.28	-38.26
714	0	EOC: Other PT Losses	1.03	-10.55	12.59	12.61	-10.53
714	1	EOC: Other PT Losses	1.03	2.24	-0.18	-0.17	2.25
714	2	EOC: Other PT Losses	1.03	15.03	-12.96	-12.96	15.02
717	0	EOC: Other PT Losses	-2.95	-6.28	0.39	0.39	-6.28
717	1	EOC: Other PT Losses	-2.95	-5.22	-0.66	-0.67	-5.23
717	2	EOC: Other PT Losses	-2.95	-4.17	-1.71	-1.72	-4.18
720	0	EOC: Other PT Losses	-12.71	-16.99	-8.41	-8.43	-17.01
720	1	EOC: Other PT Losses	-12.71	-13.87	-11.54	-11.55	-13.88
720	2	EOC: Other PT Losses	-12.71	-10.75	-14.66	-14.67	-10.76
723	0	EOC: Other PT Losses	21.62	19.78	23.46	23.45	19.78
723	1	EOC: Other PT Losses	21.62	21.38	21.87	21.85	21.37
723	2	EOC: Other PT Losses	21.62	22.98	20.28	20.25	22.96
726	0	EOC: Other PT Losses	-34.57	-49.43	-19.69	-19.70	-49.45
726	1	EOC: Other PT Losses	-34.57	-40.47	-28.65	-28.66	-40.48
726	2	EOC: Other PT Losses	-34.57	-31.52	-37.61	-37.61	-31.52
729	0	EOC: Other PT Losses	29.21	51.53	6.89	6.88	51.52
729	1	EOC: Other PT Losses	29.21	33.92	24.51	24.49	33.91
729	2	EOC: Other PT Losses	29.21	16.32	42.12	42.10	16.29
732	0	EOC: Other PT Losses	-89.03	-71.62	-106.42	-106.43	-71.63
732	1	EOC: Other PT Losses	-89.03	-89.62	-88.42	-88.43	-89.63
732	2	EOC: Other PT Losses	-89.03	-107.63	-70.41	-70.42	-107.64
741	0	EOC: Other PT Losses	-107.93	-91.73	-124.10	-124.13	-91.76
741	1	EOC: Other PT Losses	-107.93	-107.32	-108.52	-108.54	-107.34
741	2	EOC: Other PT Losses	-107.93	-122.92	-92.94	-92.94	-122.92
744	0	EOC: Other PT Losses	41.32	60.36	22.29	22.29	60.36
744	1	EOC: Other PT Losses	41.32	40.21	42.44	42.44	40.21
744	2	EOC: Other PT Losses	41.32	20.07	62.60	62.58	20.05
747	0	EOC: Other PT Losses	-35.54	-9.19	-61.89	-61.89	-9.18
747	1	EOC: Other PT Losses	-35.54	-31.60	-39.47	-39.48	-31.60
747	2	EOC: Other PT Losses	-35.54	-54.01	-17.06	-17.07	-54.02
750	0	EOC: Other PT Losses	24.79	29.08	20.50	20.49	29.07
750	1	EOC: Other PT Losses	24.79	22.10	27.48	27.48	22.09
750	2	EOC: Other PT Losses	24.79	15.11	34.46	34.46	15.11
753	0	EOC: Other PT Losses	-15.91	-8.38	-23.43	-23.44	-8.39
753	1	EOC: Other PT Losses	-15.91	-15.03	-16.78	-16.79	-15.05
753	2	EOC: Other PT Losses	-15.91	-21.69	-10.13	-10.14	-21.70
756	0	EOC: Other PT Losses	-5.79	-10.14	-1.43	-1.44	-10.15
756	1	EOC: Other PT Losses	-5.79	-9.79	-1.79	-1.79	-9.80
756	2	EOC: Other PT Losses	-5.79	-9.44	-2.14	-2.14	-9.44
759	0	EOC: Other PT Losses	3.80	-4.80	12.43	12.40	-4.83
759	1	EOC: Other PT Losses	3.80	5.24	2.38	2.35	5.22
759	2	EOC: Other PT Losses	3.80	15.29	-7.68	-7.69	15.28
762	0	EOC: Other PT Losses	-45.10	-66.06	-24.12	-24.15	-66.09
762	1	EOC: Other PT Losses	-45.10	-51.54	-38.65	-38.66	-51.55
762	2	EOC: Other PT Losses	-45.10	-37.02	-53.18	-53.18	-37.02
765	0	EOC: Other PT Losses	23.20	-9.36	55.82	55.77	-9.41
765	1	EOC: Other PT Losses	23.20	18.63	27.81	27.78	18.60
765	2	EOC: Other PT Losses	23.20	46.63	-0.20	-0.22	46.61
768	0	EOC: Other PT Losses	-100.45	-139.76	-61.08	-61.14	-139.81
768	1	EOC: Other PT Losses	-100.45	-113.50	-87.37	-87.39	-113.53
768	2	EOC: Other PT Losses	-100.45	-87.25	-113.65	-113.64	-87.25

			SERVICE III-CASE A				
Member	Station	Result Case	(P/A) @ Centroid (kips/ft²)	Normal Stress @ Point 1 (kips/ft²)	Normal Stress @ Point 2 (kips/ft²)	Normal Stress @ Point 3 (kips/ft²)	Normal Stress @ Point 4 (kips/ft²)
705	0	EOC: Other PT Losses	-327	-428	-226	-226	-429
705	1	EOC: Other PT Losses	-326	-406	-246	-246	-406
705	2	EOC: Other PT Losses	-326	-327	-325	-325	-327
708	0	EOC: Other PT Losses	194	95	317	317	95
708	1	EOC: Other PT Losses	194	164	225	225	164
708	2	EOC: Other PT Losses	195	262	131	131	262
711	0	EOC: Other PT Losses	-141	-188	-94	-94	-188
711	1	EOC: Other PT Losses	-140	-194	-86	-86	-194
711	2	EOC: Other PT Losses	-139	-128	-150	-150	-128
714	0	EOC: Other PT Losses	53	115	3	3	115
714	1	EOC: Other PT Losses	54	68	39	39	68
714	2	EOC: Other PT Losses	54	35	90	90	35
717	0	EOC: Other PT Losses	90	47	133	133	47
717	1	EOC: Other PT Losses	91	51	131	131	51
717	2	EOC: Other PT Losses	92	109	75	75	109
720	0	EOC: Other PT Losses	-58	-220	103	103	-220
720	1	EOC: Other PT Losses	-57	-71	-44	-44	-71
720	2	EOC: Other PT Losses	-57	86	-199	-199	86
723	0	EOC: Other PT Losses	294	247	342	342	247
723	1	EOC: Other PT Losses	295	277	314	314	277
723	2	EOC: Other PT Losses	296	343	249	249	343
726	0	EOC: Other PT Losses	-210	-350	-70	-70	-350
726	1	EOC: Other PT Losses	-209	-241	-177	-177	-241
726	2	EOC: Other PT Losses	-208	-111	-305	-305	-111
729	0	EOC: Other PT Losses	371	446	296	296	446
729	1	EOC: Other PT Losses	372	393	351	351	392
729	2	EOC: Other PT Losses	373	357	389	389	356
732	0	EOC: Other PT Losses	-397	-388	-405	-405	-388
732	1	EOC: Other PT Losses	-396	-422	-369	-369	-422
732	2	EOC: Other PT Losses	-395	-408	-382	-382	-408
741	0	EOC: Other PT Losses	-188	-224	-152	-152	-224
741	1	EOC: Other PT Losses	-187	-217	-157	-157	-217
741	2	EOC: Other PT Losses	-186	-161	-212	-212	-161
744	0	EOC: Other PT Losses	221	228	213	213	228
744	1	EOC: Other PT Losses	222	204	239	239	204
744	2	EOC: Other PT Losses	222	195	250	250	195
747	0	EOC: Other PT Losses	-32	0	-63	-63	0
747	1	EOC: Other PT Losses	-31	-49	-12	-12	-49
747	2	EOC: Other PT Losses	-30	-98	38	38	-98
750	0	EOC: Other PT Losses	128	162	94	94	162
750	1	EOC: Other PT Losses	129	111	147	147	111
750	2	EOC: Other PT Losses	130	76	184	184	76
753	0	EOC: Other PT Losses	-37	28	-103	-103	28
753	1	EOC: Other PT Losses	-37	-31	-42	-42	-32
753	2	EOC: Other PT Losses	-36	-90	18	18	-90
756	0	EOC: Other PT Losses	75	86	65	64	86
756	1	EOC: Other PT Losses	76	61	90	90	61
756	2	EOC: Other PT Losses	77	54	99	99	54
759	0	EOC: Other PT Losses	4	34	-22	-22	34
759	1	EOC: Other PT Losses	4	8	1	1	8
759	2	EOC: Other PT Losses	5	-10	29	29	-10
762	0	EOC: Other PT Losses	24	15	33	33	15
762	1	EOC: Other PT Losses	25	4	45	45	4
762	2	EOC: Other PT Losses	25	12	39	39	12
765	0	EOC: Other PT Losses	37	8	80	79	8
765	1	EOC: Other PT Losses	38	20	55	55	20
765	2	EOC: Other PT Losses	38	47	31	31	47
768	0	EOC: Other PT Losses	-19	4	-43	-43	4
768	1	EOC: Other PT Losses	-19	-32	-6	-6	-32
768	2	EOC: Other PT Losses	-18	-44	8	8	-44

			SERVICE III-CASE B				
Member	Station	Result Case	(P/A) @ Centroid (kips/ft²)	Normal Stress @ Point 1 (kips/ft²)	Normal Stress @ Point 2 (kips/ft²)	Normal Stress @ Point 3 (kips/ft²)	Normal Stress @ Point 4 (kips/ft²)
705	0	EOC: Other PT Losses	-335	-438	-233	-233	-438
705	1	EOC: Other PT Losses	-334	-415	-253	-253	-415
705	2	EOC: Other PT Losses	-333	-335	-332	-332	-335
708	0	EOC: Other PT Losses	197	94	325	325	94
708	1	EOC: Other PT Losses	198	167	229	229	166
708	2	EOC: Other PT Losses	199	268	132	132	268
711	0	EOC: Other PT Losses	-148	-196	-100	-100	-196
711	1	EOC: Other PT Losses	-147	-201	-93	-93	-201
711	2	EOC: Other PT Losses	-146	-135	-158	-158	-135
714	0	EOC: Other PT Losses	55	114	9	9	113
714	1	EOC: Other PT Losses	56	70	41	41	70
714	2	EOC: Other PT Losses	56	41	88	88	41
717	0	EOC: Other PT Losses	86	42	130	129	42
717	1	EOC: Other PT Losses	87	46	128	128	46
717	2	EOC: Other PT Losses	88	104	71	71	104
720	0	EOC: Other PT Losses	-58	-219	103	103	-219
720	1	EOC: Other PT Losses	-57	-70	-44	-44	-70
720	2	EOC: Other PT Losses	-56	86	-198	-198	86
723	0	EOC: Other PT Losses	294	245	342	342	245
723	1	EOC: Other PT Losses	294	276	313	313	276
723	2	EOC: Other PT Losses	295	342	248	248	342
726	0	EOC: Other PT Losses	-212	-353	-71	-71	-353
726	1	EOC: Other PT Losses	-211	-244	-178	-178	-244
726	2	EOC: Other PT Losses	-210	-113	-307	-307	-113
729	0	EOC: Other PT Losses	373	449	297	297	449
729	1	EOC: Other PT Losses	374	394	353	353	394
729	2	EOC: Other PT Losses	374	357	392	392	357
732	0	EOC: Other PT Losses	-401	-393	-410	-410	-393
732	1	EOC: Other PT Losses	-401	-428	-373	-374	-428
732	2	EOC: Other PT Losses	-400	-413	-386	-386	-413
741	0	EOC: Other PT Losses	-169	-200	-139	-139	-200
741	1	EOC: Other PT Losses	-169	-197	-140	-140	-197
741	2	EOC: Other PT Losses	-168	-144	-191	-191	-144
744	0	EOC: Other PT Losses	203	218	188	188	219
744	1	EOC: Other PT Losses	204	190	218	218	190
744	2	EOC: Other PT Losses	205	176	234	234	176
747	0	EOC: Other PT Losses	-36	1	-73	-73	1
747	1	EOC: Other PT Losses	-35	-50	-20	-20	-50
747	2	EOC: Other PT Losses	-35	-101	32	32	-101
750	0	EOC: Other PT Losses	127	160	94	94	160
750	1	EOC: Other PT Losses	128	111	145	145	111
750	2	EOC: Other PT Losses	129	77	180	180	77
753	0	EOC: Other PT Losses	-42	23	-107	-107	23
753	1	EOC: Other PT Losses	-42	-37	-46	-46	-37
753	2	EOC: Other PT Losses	-41	-96	14	14	-96
756	0	EOC: Other PT Losses	78	92	64	64	92
756	1	EOC: Other PT Losses	79	65	92	92	65
756	2	EOC: Other PT Losses	79	56	103	103	56
759	0	EOC: Other PT Losses	-7	28	-38	-38	28
759	1	EOC: Other PT Losses	-7	-3	-10	-10	-3
759	2	EOC: Other PT Losses	-6	-27	23	23	-27
762	0	EOC: Other PT Losses	36	34	38	38	34
762	1	EOC: Other PT Losses	37	18	55	55	18
762	2	EOC: Other PT Losses	37	20	54	54	20
765	0	EOC: Other PT Losses	25	6	57	57	6
765	1	EOC: Other PT Losses	26	10	41	41	10
765	2	EOC: Other PT Losses	26	29	24	24	29
768	0	EOC: Other PT Losses	0	28	-28	-28	27
768	1	EOC: Other PT Losses	1	-11	13	13	-11
768	2	EOC: Other PT Losses	2	-26	29	29	-26

			SERVICE III-CASE C				
Member	Station	Result Case	(P/A) @ Centroid (kips/ft²)	Normal Stress @ Point 1 (kips/ft²)	Normal Stress @ Point 2 (kips/ft²)	Normal Stress @ Point 3 (kips/ft²)	Normal Stress @ Point 4 (kips/ft²)
705	0	EOC: Other PT Losses	-274	-351	-196	-196	-351
705	1	EOC: Other PT Losses	-273	-338	-208	-208	-338
705	2	EOC: Other PT Losses	-272	-266	-278	-278	-266
708	0	EOC: Other PT Losses	162	82	267	267	81
708	1	EOC: Other PT Losses	163	139	186	186	139
708	2	EOC: Other PT Losses	163	226	103	103	226
711	0	EOC: Other PT Losses	-119	-161	-78	-78	-161
711	1	EOC: Other PT Losses	-119	-169	-68	-68	-169
711	2	EOC: Other PT Losses	-118	-105	-130	-130	-105
714	0	EOC: Other PT Losses	39	104	-13	-13	104
714	1	EOC: Other PT Losses	40	54	26	26	54
714	2	EOC: Other PT Losses	41	19	80	80	19
717	0	EOC: Other PT Losses	78	40	116	116	40
717	1	EOC: Other PT Losses	79	42	116	116	42
717	2	EOC: Other PT Losses	80	98	62	62	98
720	0	EOC: Other PT Losses	-57	-204	90	90	-205
720	1	EOC: Other PT Losses	-56	-69	-44	-44	-69
720	2	EOC: Other PT Losses	-55	74	-185	-185	74
723	0	EOC: Other PT Losses	257	213	300	300	213
723	1	EOC: Other PT Losses	258	240	275	275	240
723	2	EOC: Other PT Losses	258	304	213	213	304
726	0	EOC: Other PT Losses	-189	-315	-64	-64	-315
726	1	EOC: Other PT Losses	-189	-218	-159	-159	-218
726	2	EOC: Other PT Losses	-188	-100	-275	-275	-100
729	0	EOC: Other PT Losses	323	391	255	255	391
729	1	EOC: Other PT Losses	324	343	305	305	343
729	2	EOC: Other PT Losses	325	313	337	337	313
732	0	EOC: Other PT Losses	-351	-342	-359	-360	-342
732	1	EOC: Other PT Losses	-350	-375	-325	-325	-375
732	2	EOC: Other PT Losses	-349	-359	-339	-339	-359
741	0	EOC: Other PT Losses	-199	-233	-164	-164	-233
741	1	EOC: Other PT Losses	-198	-228	-167	-167	-228
741	2	EOC: Other PT Losses	-197	-173	-220	-220	-173
744	0	EOC: Other PT Losses	220	227	213	213	227
744	1	EOC: Other PT Losses	221	202	239	239	202
744	2	EOC: Other PT Losses	222	192	251	251	192
747	0	EOC: Other PT Losses	-31	-1	-62	-62	-1
747	1	EOC: Other PT Losses	-31	-49	-13	-13	-49
747	2	EOC: Other PT Losses	-30	-96	36	36	-96
750	0	EOC: Other PT Losses	119	149	89	89	149
750	1	EOC: Other PT Losses	120	101	139	139	101
750	2	EOC: Other PT Losses	121	68	174	174	68
753	0	EOC: Other PT Losses	-31	28	-90	-90	28
753	1	EOC: Other PT Losses	-30	-25	-35	-35	-25
753	2	EOC: Other PT Losses	-30	-78	18	18	-78
756	0	EOC: Other PT Losses	58	62	53	53	62
756	1	EOC: Other PT Losses	58	43	74	74	43
756	2	EOC: Other PT Losses	59	40	78	78	41
759	0	EOC: Other PT Losses	16	36	0	0	36
759	1	EOC: Other PT Losses	16	20	13	13	19
759	2	EOC: Other PT Losses	17	11	31	31	11
762	0	EOC: Other PT Losses	0	-18	18	18	-18
762	1	EOC: Other PT Losses	1	-21	22	22	-21
762	2	EOC: Other PT Losses	1	-6	8	8	-6
765	0	EOC: Other PT Losses	53	10	109	109	10
765	1	EOC: Other PT Losses	53	34	73	73	33
765	2	EOC: Other PT Losses	54	72	36	36	72
768	0	EOC: Other PT Losses	-51	-41	-61	-61	-41
768	1	EOC: Other PT Losses	-50	-67	-34	-34	-67
768	2	EOC: Other PT Losses	-50	-70	-30	-30	-70

MEMBER STRESSES

DIAGONAL MEMBERS
D10K

Note: Stresses given at member's discontinuities (break points).

Member No.	LARSA Member	MEMBER STRESS (ksf)
2	705	-238
3	708	352
4	711	-74
5	714	113
6	717	148
7	720	99
8	723	355
9	726	-69
10	729	451
11	732	-299
14	741	-125
15	744	257
16	747	39
17	750	202
18	753	27
19	756	117
20	759	33
21	762	42
22	765	133
23	768	-52

			SELWEIGHT (DC)				
Member	Station	Result Case	(P/A) @ Centroid (kips/ft²)	Normal Stress @ Point 1 (kips/ft²)	Normal Stress @ Point 2 (kips/ft²)	Normal Stress @ Point 3 (kips/ft²)	Normal Stress @ Point 4 (kips/ft²)
705	0	D10K: Other PT Losses	-344.35	-455.42	-233.15	-233.28	-455.56
705	1	D10K: Other PT Losses	-343.45	-430.21	-256.62	-256.69	-430.27
705	2	D10K: Other PT Losses	-342.54	-347.17	-337.92	-337.92	-347.17
708	0	D10K: Other PT Losses	169.00	9.58	328.66	328.42	9.34
708	1	D10K: Other PT Losses	169.78	131.62	208.04	207.95	131.53
708	2	D10K: Other PT Losses	170.57	257.72	83.35	83.42	257.79
711	0	D10K: Other PT Losses	-206.28	-237.42	-175.04	-175.13	-237.51
711	1	D10K: Other PT Losses	-205.37	-243.52	-167.16	-167.22	-243.59
711	2	D10K: Other PT Losses	-204.47	-177.96	-230.94	-230.98	-178.00
714	0	D10K: Other PT Losses	67.35	-4.95	139.72	139.65	-5.02
714	1	D10K: Other PT Losses	68.24	77.93	58.56	58.55	77.91
714	2	D10K: Other PT Losses	69.12	161.05	-22.84	-22.81	161.08
717	0	D10K: Other PT Losses	-10.97	-36.93	15.08	15.00	-37.01
717	1	D10K: Other PT Losses	-10.06	-44.40	24.35	24.28	-44.47
717	2	D10K: Other PT Losses	-9.15	2.82	-21.07	-21.13	2.76
720	0	D10K: Other PT Losses	-24.25	-72.58	24.12	24.08	-72.62
720	1	D10K: Other PT Losses	-23.32	-33.83	-12.76	-12.81	-33.88
720	2	D10K: Other PT Losses	-22.38	12.05	-56.76	-56.82	11.99
723	0	D10K: Other PT Losses	160.58	136.11	185.13	185.06	136.03
723	1	D10K: Other PT Losses	161.49	144.61	178.45	178.37	144.54
723	2	D10K: Other PT Losses	162.41	189.27	135.63	135.55	189.18
726	0	D10K: Other PT Losses	-167.85	-259.87	-75.74	-75.82	-259.96
726	1	D10K: Other PT Losses	-166.94	-203.81	-129.99	-130.07	-203.88
726	2	D10K: Other PT Losses	-166.03	-126.44	-205.53	-205.61	-126.52
729	0	D10K: Other PT Losses	240.34	325.97	154.80	154.72	325.89
729	1	D10K: Other PT Losses	241.28	251.21	231.43	231.35	251.13
729	2	D10K: Other PT Losses	242.21	193.93	290.59	290.50	193.84
732	0	D10K: Other PT Losses	-387.32	-330.29	-444.28	-444.35	-330.36
732	1	D10K: Other PT Losses	-386.44	-404.67	-368.14	-368.21	-404.74
732	2	D10K: Other PT Losses	-385.56	-429.87	-341.18	-341.25	-429.95
741	0	D10K: Other PT Losses	-194.66	-189.40	-199.89	-199.92	-189.43
741	1	D10K: Other PT Losses	-193.75	-217.54	-169.97	-169.97	-217.54
741	2	D10K: Other PT Losses	-192.85	-196.12	-189.61	-189.57	-196.08
744	0	D10K: Other PT Losses	98.68	89.23	108.07	108.12	89.29
744	1	D10K: Other PT Losses	99.53	86.61	112.41	112.45	86.65
744	2	D10K: Other PT Losses	100.38	98.88	101.86	101.88	98.90
747	0	D10K: Other PT Losses	-20.46	-12.16	-28.76	-28.75	-12.15
747	1	D10K: Other PT Losses	-19.82	-27.56	-12.06	-12.07	-27.57
747	2	D10K: Other PT Losses	-19.18	-42.69	4.38	4.34	-42.73
750	0	D10K: Other PT Losses	17.27	19.94	14.56	14.60	19.97
750	1	D10K: Other PT Losses	18.03	4.07	31.95	31.99	4.11
750	2	D10K: Other PT Losses	18.79	3.84	33.69	33.74	3.88
753	0	D10K: Other PT Losses	8.47	9.28	7.68	7.66	9.26
753	1	D10K: Other PT Losses	9.03	12.52	5.56	5.53	12.50
753	2	D10K: Other PT Losses	9.59	17.08	2.13	2.10	17.05
756	0	D10K: Other PT Losses	-33.55	-54.94	-12.16	-12.15	-54.93
756	1	D10K: Other PT Losses	-32.82	-47.17	-18.50	-18.48	-47.14
756	2	D10K: Other PT Losses	-32.10	-22.33	-41.91	-41.86	-22.28
759	0	D10K: Other PT Losses	53.52	19.28	87.81	87.76	19.22
759	1	D10K: Other PT Losses	54.02	55.08	53.00	52.96	55.04
759	2	D10K: Other PT Losses	54.52	92.61	16.45	16.42	92.58
762	0	D10K: Other PT Losses	-92.94	-139.30	-46.55	-46.58	-139.32
762	1	D10K: Other PT Losses	-92.24	-109.99	-74.51	-74.49	-109.98
762	2	D10K: Other PT Losses	-91.55	-62.92	-120.23	-120.18	-62.87
765	0	D10K: Other PT Losses	74.15	5.86	142.55	142.44	5.75
765	1	D10K: Other PT Losses	74.60	60.82	88.46	88.39	60.75
765	2	D10K: Other PT Losses	75.06	117.64	32.50	32.47	117.61
768	0	D10K: Other PT Losses	-151.06	-195.82	-106.21	-106.30	-195.90
768	1	D10K: Other PT Losses	-150.30	-173.19	-127.39	-127.40	-173.20
768	2	D10K: Other PT Losses	-149.53	-126.83	-172.30	-172.24	-126.77

			NONSTRUCTURAL COMPONENTS (DC)				
Member	Station	Result Case	(P/A) @ Centroid (kips/ft²)	Normal Stress @ Point 1 (kips/ft²)	Normal Stress @ Point 2 (kips/ft²)	Normal Stress @ Point 3 (kips/ft²)	Normal Stress @ Point 4 (kips/ft²)
705	0	D10K: Other PT Losses	-7.78	-9.99	-5.58	-5.58	-9.99
705	1	D10K: Other PT Losses	-7.78	-9.08	-6.48	-6.48	-9.08
705	2	D10K: Other PT Losses	-7.78	-8.17	-7.39	-7.39	-8.17
708	0	D10K: Other PT Losses	4.97	1.13	8.81	8.81	1.13
708	1	D10K: Other PT Losses	4.97	4.30	5.63	5.63	4.30
708	2	D10K: Other PT Losses	4.97	7.48	2.46	2.46	7.48
711	0	D10K: Other PT Losses	-2.89	-4.02	-1.76	-1.76	-4.02
711	1	D10K: Other PT Losses	-2.89	-3.58	-2.20	-2.20	-3.58
711	2	D10K: Other PT Losses	-2.89	-3.14	-2.64	-2.64	-3.14
714	0	D10K: Other PT Losses	2.12	2.53	1.72	1.72	2.53
714	1	D10K: Other PT Losses	2.12	2.15	2.10	2.10	2.15
714	2	D10K: Other PT Losses	2.12	1.77	2.48	2.48	1.77
717	0	D10K: Other PT Losses	3.02	2.21	3.83	3.83	2.21
717	1	D10K: Other PT Losses	3.02	2.57	3.48	3.48	2.57
717	2	D10K: Other PT Losses	3.02	2.93	3.12	3.12	2.93
720	0	D10K: Other PT Losses	-0.32	-3.10	2.47	2.46	-3.10
720	1	D10K: Other PT Losses	-0.32	-0.43	-0.20	-0.21	-0.43
720	2	D10K: Other PT Losses	-0.32	2.24	-2.88	-2.87	2.24
723	0	D10K: Other PT Losses	7.12	6.41	7.84	7.84	6.41
723	1	D10K: Other PT Losses	7.12	6.94	7.30	7.30	6.94
723	2	D10K: Other PT Losses	7.12	7.48	6.77	6.77	7.48
726	0	D10K: Other PT Losses	-3.46	-6.09	-0.82	-0.82	-6.09
726	1	D10K: Other PT Losses	-3.46	-3.88	-3.04	-3.04	-3.88
726	2	D10K: Other PT Losses	-3.46	-1.66	-5.25	-5.25	-1.66
729	0	D10K: Other PT Losses	8.49	9.71	7.26	7.27	9.71
729	1	D10K: Other PT Losses	8.49	8.80	8.18	8.18	8.79
729	2	D10K: Other PT Losses	8.49	7.88	9.10	9.10	7.88
732	0	D10K: Other PT Losses	-7.56	-7.56	-7.55	-7.56	-7.56
732	1	D10K: Other PT Losses	-7.56	-7.78	-7.33	-7.33	-7.78
732	2	D10K: Other PT Losses	-7.56	-8.01	-7.10	-7.10	-8.01
741	0	D10K: Other PT Losses	-1.22	-2.40	-0.05	-0.05	-2.40
741	1	D10K: Other PT Losses	-1.22	-1.40	-1.05	-1.05	-1.40
741	2	D10K: Other PT Losses	-1.22	-0.40	-2.05	-2.05	-0.40
744	0	D10K: Other PT Losses	3.20	1.76	4.65	4.65	1.76
744	1	D10K: Other PT Losses	3.20	2.77	3.64	3.64	2.77
744	2	D10K: Other PT Losses	3.20	3.78	2.63	2.63	3.78
747	0	D10K: Other PT Losses	0.97	-0.06	2.00	1.99	-0.06
747	1	D10K: Other PT Losses	0.97	0.21	1.73	1.73	0.21
747	2	D10K: Other PT Losses	0.97	0.48	1.46	1.46	0.48
750	0	D10K: Other PT Losses	1.59	2.30	0.87	0.87	2.30
750	1	D10K: Other PT Losses	1.59	1.65	1.52	1.52	1.65
750	2	D10K: Other PT Losses	1.59	1.00	2.17	2.17	1.00
753	0	D10K: Other PT Losses	-0.03	0.98	-1.03	-1.03	0.97
753	1	D10K: Other PT Losses	-0.03	0.15	-0.20	-0.20	0.14
753	2	D10K: Other PT Losses	-0.03	-0.68	0.63	0.63	-0.69
756	0	D10K: Other PT Losses	2.26	2.65	1.87	1.87	2.64
756	1	D10K: Other PT Losses	2.26	2.35	2.17	2.17	2.35
756	2	D10K: Other PT Losses	2.26	2.06	2.46	2.46	2.06
759	0	D10K: Other PT Losses	0.20	1.00	-0.59	-0.59	1.00
759	1	D10K: Other PT Losses	0.20	0.22	0.19	0.19	0.22
759	2	D10K: Other PT Losses	0.20	-0.56	0.97	0.97	-0.56
762	0	D10K: Other PT Losses	1.58	1.70	1.46	1.46	1.70
762	1	D10K: Other PT Losses	1.58	1.45	1.71	1.70	1.45
762	2	D10K: Other PT Losses	1.58	1.21	1.95	1.95	1.20
765	0	D10K: Other PT Losses	-1.56	-1.19	-1.93	-1.93	-1.20
765	1	D10K: Other PT Losses	-1.56	-1.86	-1.26	-1.27	-1.86
765	2	D10K: Other PT Losses	-1.56	-2.52	-0.60	-0.60	-2.52
768	0	D10K: Other PT Losses	3.35	7.83	-1.12	-1.13	7.82
768	1	D10K: Other PT Losses	3.35	4.94	1.76	1.76	4.94
768	2	D10K: Other PT Losses	3.35	2.06	4.64	4.64	2.06

			CREEP (CR)				
Member	Station	Result Case	(P/A) @ Centroid (kips/ft²)	Normal Stress @ Point 1 (kips/ft²)	Normal Stress @ Point 2 (kips/ft²)	Normal Stress @ Point 3 (kips/ft²)	Normal Stress @ Point 4 (kips/ft²)
705	0	D10K: Other PT Losses	30.05	85.86	-25.79	-25.76	85.89
705	1	D10K: Other PT Losses	30.05	56.17	3.90	3.93	56.20
705	2	D10K: Other PT Losses	30.05	26.48	33.59	33.62	26.51
708	0	D10K: Other PT Losses	-28.04	-46.04	-10.07	-10.03	-46.00
708	1	D10K: Other PT Losses	-28.04	-13.91	-42.17	-42.17	-13.90
708	2	D10K: Other PT Losses	-28.04	18.23	-74.27	-74.31	18.20
711	0	D10K: Other PT Losses	33.72	15.38	52.02	52.06	15.42
711	1	D10K: Other PT Losses	33.72	15.20	52.21	52.25	15.23
711	2	D10K: Other PT Losses	33.72	15.01	52.40	52.44	15.04
714	0	D10K: Other PT Losses	-15.05	18.51	-48.64	-48.61	18.54
714	1	D10K: Other PT Losses	-15.05	-15.90	-14.20	-14.20	-15.90
714	2	D10K: Other PT Losses	-15.05	-50.31	20.24	20.21	-50.34
717	0	D10K: Other PT Losses	34.24	28.52	39.92	39.96	28.57
717	1	D10K: Other PT Losses	34.24	26.23	42.22	42.26	26.27
717	2	D10K: Other PT Losses	34.24	23.93	44.52	44.56	23.97
720	0	D10K: Other PT Losses	-3.49	-12.50	5.54	5.52	-12.52
720	1	D10K: Other PT Losses	-3.49	-4.54	-2.45	-2.44	-4.53
720	2	D10K: Other PT Losses	-3.49	3.42	-10.44	-10.40	3.46
723	0	D10K: Other PT Losses	4.13	2.54	5.67	5.73	2.59
723	1	D10K: Other PT Losses	4.13	-2.66	10.89	10.93	-2.62
723	2	D10K: Other PT Losses	4.13	-7.86	16.10	16.13	-7.84
726	0	D10K: Other PT Losses	29.16	34.72	23.61	23.60	34.71
726	1	D10K: Other PT Losses	29.16	32.11	26.20	26.21	32.13
726	2	D10K: Other PT Losses	29.16	29.50	28.78	28.83	29.55
729	0	D10K: Other PT Losses	-25.65	-49.96	-1.42	-1.35	-49.89
729	1	D10K: Other PT Losses	-25.65	-28.80	-22.54	-22.51	-28.77
729	2	D10K: Other PT Losses	-25.65	-7.64	-43.67	-43.67	-7.64
732	0	D10K: Other PT Losses	101.32	90.08	112.56	112.55	90.08
732	1	D10K: Other PT Losses	101.32	94.24	108.38	108.39	94.25
732	2	D10K: Other PT Losses	101.32	98.41	104.21	104.23	98.43
741	0	D10K: Other PT Losses	100.49	85.76	115.22	115.22	85.76
741	1	D10K: Other PT Losses	100.49	90.93	110.06	110.05	90.92
741	2	D10K: Other PT Losses	100.49	96.11	104.90	104.87	96.09
744	0	D10K: Other PT Losses	-30.57	-42.45	-18.65	-18.69	-42.48
744	1	D10K: Other PT Losses	-30.57	-28.23	-32.89	-32.91	-28.25
744	2	D10K: Other PT Losses	-30.57	-14.01	-47.13	-47.13	-14.01
747	0	D10K: Other PT Losses	25.46	16.62	34.31	34.29	16.61
747	1	D10K: Other PT Losses	25.46	23.33	27.59	27.59	23.32
747	2	D10K: Other PT Losses	25.46	30.03	20.87	20.89	30.04
750	0	D10K: Other PT Losses	5.79	5.88	5.74	5.71	5.85
750	1	D10K: Other PT Losses	5.79	6.03	5.58	5.56	6.01
750	2	D10K: Other PT Losses	5.79	6.18	5.42	5.41	6.17
753	0	D10K: Other PT Losses	-1.73	5.97	-9.41	-9.43	5.95
753	1	D10K: Other PT Losses	-1.73	-3.01	-0.45	-0.45	-3.01
753	2	D10K: Other PT Losses	-1.73	-11.99	8.51	8.53	-11.96
756	0	D10K: Other PT Losses	29.33	36.32	22.38	22.35	36.29
756	1	D10K: Other PT Losses	29.33	28.59	30.09	30.07	28.57
756	2	D10K: Other PT Losses	29.33	20.87	37.81	37.80	20.85
759	0	D10K: Other PT Losses	-18.45	-0.48	-36.41	-36.43	-0.49
759	1	D10K: Other PT Losses	-18.45	-18.60	-18.32	-18.31	-18.59
759	2	D10K: Other PT Losses	-18.45	-36.71	-0.23	-0.19	-36.68
762	0	D10K: Other PT Losses	29.04	34.41	23.69	23.67	34.39
762	1	D10K: Other PT Losses	29.04	25.03	33.07	33.05	25.02
762	2	D10K: Other PT Losses	29.04	15.65	42.44	42.43	15.64
765	0	D10K: Other PT Losses	-23.54	-10.54	-36.54	-36.54	-10.54
765	1	D10K: Other PT Losses	-23.54	-21.58	-25.53	-25.50	-21.56
765	2	D10K: Other PT Losses	-23.54	-32.62	-14.51	-14.47	-32.57
768	0	D10K: Other PT Losses	3.41	2.11	4.72	4.71	2.11
768	1	D10K: Other PT Losses	3.41	-1.94	8.77	8.77	-1.95
768	2	D10K: Other PT Losses	3.41	-6.00	12.83	12.83	-6.00

			SHRINKAGE (SH)				
Member	Station	Result Case	(P/A) @ Centroid (kips/ft²)	Normal Stress @ Point 1 (kips/ft²)	Normal Stress @ Point 2 (kips/ft²)	Normal Stress @ Point 3 (kips/ft²)	Normal Stress @ Point 4 (kips/ft²)
705	0	D10K: Other PT Losses	-51.98	-59.52	-44.44	-44.45	-59.53
705	1	D10K: Other PT Losses	-51.98	-57.10	-46.86	-46.87	-57.11
705	2	D10K: Other PT Losses	-51.98	-54.69	-49.27	-49.28	-54.70
708	0	D10K: Other PT Losses	9.03	-20.77	38.84	38.84	-20.78
708	1	D10K: Other PT Losses	9.03	5.95	12.12	12.11	5.95
708	2	D10K: Other PT Losses	9.03	32.68	-14.61	-14.61	32.68
711	0	D10K: Other PT Losses	-22.60	-28.59	-16.59	-16.60	-28.60
711	1	D10K: Other PT Losses	-22.60	-26.40	-18.77	-18.79	-26.42
711	2	D10K: Other PT Losses	-22.60	-24.22	-20.96	-20.97	-24.23
714	0	D10K: Other PT Losses	-6.61	-12.41	-0.81	-0.81	-12.41
714	1	D10K: Other PT Losses	-6.61	-5.34	-7.88	-7.88	-5.34
714	2	D10K: Other PT Losses	-6.61	1.72	-14.94	-14.94	1.72
717	0	D10K: Other PT Losses	12.70	10.59	14.82	14.81	10.58
717	1	D10K: Other PT Losses	12.70	10.94	14.48	14.46	10.92
717	2	D10K: Other PT Losses	12.70	11.28	14.13	14.12	11.26
720	0	D10K: Other PT Losses	-20.02	-27.31	-12.73	-12.74	-27.32
720	1	D10K: Other PT Losses	-20.02	-22.38	-17.66	-17.67	-22.39
720	2	D10K: Other PT Losses	-20.02	-17.44	-22.59	-22.60	-17.45
723	0	D10K: Other PT Losses	32.11	34.32	29.90	29.89	34.31
723	1	D10K: Other PT Losses	32.11	32.62	31.61	31.59	32.61
723	2	D10K: Other PT Losses	32.11	30.92	33.31	33.29	30.90
726	0	D10K: Other PT Losses	-35.14	-41.67	-28.59	-28.60	-41.69
726	1	D10K: Other PT Losses	-35.14	-39.04	-31.23	-31.24	-39.05
726	2	D10K: Other PT Losses	-35.14	-36.40	-33.86	-33.88	-36.41
729	0	D10K: Other PT Losses	32.32	52.93	11.72	11.71	52.92
729	1	D10K: Other PT Losses	32.32	32.67	31.99	31.97	32.65
729	2	D10K: Other PT Losses	32.32	12.41	52.25	52.23	12.39
732	0	D10K: Other PT Losses	-38.54	-31.15	-45.91	-45.93	-31.16
732	1	D10K: Other PT Losses	-38.54	-36.38	-40.69	-40.70	-36.39
732	2	D10K: Other PT Losses	-38.54	-41.61	-35.46	-35.47	-41.62
741	0	D10K: Other PT Losses	-65.83	-55.43	-76.20	-76.22	-55.46
741	1	D10K: Other PT Losses	-65.83	-63.00	-68.65	-68.66	-63.01
741	2	D10K: Other PT Losses	-65.83	-70.56	-61.09	-61.09	-70.57
744	0	D10K: Other PT Losses	46.84	67.34	26.34	26.34	67.34
744	1	D10K: Other PT Losses	46.84	43.10	50.59	50.58	43.09
744	2	D10K: Other PT Losses	46.84	18.85	74.84	74.83	18.84
747	0	D10K: Other PT Losses	-37.59	-13.14	-62.04	-62.04	-13.13
747	1	D10K: Other PT Losses	-37.59	-34.77	-40.41	-40.41	-34.77
747	2	D10K: Other PT Losses	-37.59	-56.40	-18.77	-18.78	-56.41
750	0	D10K: Other PT Losses	37.95	46.67	29.23	29.22	46.67
750	1	D10K: Other PT Losses	37.95	36.35	39.55	39.55	36.34
750	2	D10K: Other PT Losses	37.95	26.02	49.88	49.87	26.02
753	0	D10K: Other PT Losses	-26.04	-11.75	-40.32	-40.32	-11.76
753	1	D10K: Other PT Losses	-26.04	-25.15	-26.92	-26.93	-25.16
753	2	D10K: Other PT Losses	-26.04	-38.55	-13.52	-13.53	-38.56
756	0	D10K: Other PT Losses	13.25	14.45	12.07	12.05	14.44
756	1	D10K: Other PT Losses	13.25	9.38	17.13	17.13	9.37
756	2	D10K: Other PT Losses	13.25	4.30	22.20	22.20	4.30
759	0	D10K: Other PT Losses	-9.30	-9.51	-9.06	-9.08	-9.54
759	1	D10K: Other PT Losses	-9.30	-7.78	-10.80	-10.82	-7.80
759	2	D10K: Other PT Losses	-9.30	-6.04	-12.54	-12.55	-6.05
762	0	D10K: Other PT Losses	-26.00	-41.16	-10.82	-10.84	-41.18
762	1	D10K: Other PT Losses	-26.00	-32.65	-19.35	-19.36	-32.66
762	2	D10K: Other PT Losses	-26.00	-24.13	-27.88	-27.87	-24.13
765	0	D10K: Other PT Losses	10.66	-13.74	35.09	35.05	-13.78
765	1	D10K: Other PT Losses	10.66	7.25	14.09	14.06	7.22
765	2	D10K: Other PT Losses	10.66	28.24	-6.91	-6.93	28.22
768	0	D10K: Other PT Losses	-82.92	-116.87	-48.94	-48.98	-116.91
768	1	D10K: Other PT Losses	-82.92	-95.46	-70.37	-70.39	-95.48
768	2	D10K: Other PT Losses	-82.92	-74.05	-91.80	-91.80	-74.05

			PRESTRESS LOAD (PS)				
Member	Station	Result Case	(P/A) @ Centroid (kips/ft²)	Normal Stress @ Point 1 (kips/ft²)	Normal Stress @ Point 2 (kips/ft²)	Normal Stress @ Point 3 (kips/ft²)	Normal Stress @ Point 4 (kips/ft²)
705	0	D10K: Other PT Losses	33.45	23.58	43.30	43.31	23.59
705	1	D10K: Other PT Losses	33.45	34.75	32.13	32.14	34.76
705	2	D10K: Other PT Losses	33.45	45.92	20.96	20.97	45.93
708	0	D10K: Other PT Losses	-15.45	107.01	-137.92	-137.91	107.01
708	1	D10K: Other PT Losses	-15.45	-2.26	-28.65	-28.65	-2.26
708	2	D10K: Other PT Losses	-15.45	-111.52	80.62	80.62	-111.52
711	0	D10K: Other PT Losses	45.47	50.34	40.58	40.59	50.35
711	1	D10K: Other PT Losses	45.47	50.35	40.56	40.58	50.37
711	2	D10K: Other PT Losses	45.47	50.36	40.55	40.57	50.38
714	0	D10K: Other PT Losses	-20.90	98.40	-140.21	-140.20	98.40
714	1	D10K: Other PT Losses	-20.90	-17.04	-24.76	-24.76	-17.05
714	2	D10K: Other PT Losses	-20.90	-132.48	90.69	90.68	-132.49
717	0	D10K: Other PT Losses	41.95	35.64	48.24	48.25	35.66
717	1	D10K: Other PT Losses	41.95	47.78	36.09	36.11	47.80
717	2	D10K: Other PT Losses	41.95	59.93	23.95	23.96	59.94
720	0	D10K: Other PT Losses	-25.04	-115.89	65.83	65.82	-115.90
720	1	D10K: Other PT Losses	-25.04	-24.48	-25.60	-25.59	-24.48
720	2	D10K: Other PT Losses	-25.04	66.93	-117.02	-117.00	66.95
723	0	D10K: Other PT Losses	35.90	20.34	51.44	51.46	20.36
723	1	D10K: Other PT Losses	35.90	43.32	28.46	28.48	43.34
723	2	D10K: Other PT Losses	35.90	66.30	5.49	5.50	66.31
726	0	D10K: Other PT Losses	-32.74	-71.19	5.72	5.72	-71.19
726	1	D10K: Other PT Losses	-32.74	-25.21	-40.27	-40.26	-25.20
726	2	D10K: Other PT Losses	-32.74	20.77	-86.27	-86.25	20.79
729	0	D10K: Other PT Losses	33.08	-12.05	78.19	78.21	-12.02
729	1	D10K: Other PT Losses	33.08	41.00	25.15	25.16	41.01
729	2	D10K: Other PT Losses	33.08	94.05	-27.89	-27.89	94.05
732	0	D10K: Other PT Losses	-54.02	-92.15	-15.88	-15.88	-92.15
732	1	D10K: Other PT Losses	-54.02	-56.81	-51.22	-51.22	-56.81
732	2	D10K: Other PT Losses	-54.02	-21.47	-86.57	-86.56	-21.47
741	0	D10K: Other PT Losses	-86.04	-106.67	-65.41	-65.41	-106.66
741	1	D10K: Other PT Losses	-86.04	-84.42	-87.65	-87.65	-84.42
741	2	D10K: Other PT Losses	-86.04	-62.18	-109.89	-109.89	-62.18
744	0	D10K: Other PT Losses	50.04	52.49	47.59	47.58	52.48
744	1	D10K: Other PT Losses	50.04	51.88	48.19	48.19	51.88
744	2	D10K: Other PT Losses	50.04	51.27	48.80	48.80	51.27
747	0	D10K: Other PT Losses	-32.70	4.69	-70.09	-70.10	4.69
747	1	D10K: Other PT Losses	-32.70	-36.90	-28.51	-28.50	-36.90
747	2	D10K: Other PT Losses	-32.70	-78.49	13.08	13.09	-78.49
750	0	D10K: Other PT Losses	48.07	65.90	30.24	30.24	65.90
750	1	D10K: Other PT Losses	48.07	47.87	48.27	48.27	47.87
750	2	D10K: Other PT Losses	48.07	29.84	66.30	66.30	29.84
753	0	D10K: Other PT Losses	-36.23	12.50	-84.97	-84.96	12.51
753	1	D10K: Other PT Losses	-36.23	-34.71	-37.76	-37.76	-34.70
753	2	D10K: Other PT Losses	-36.23	-81.91	9.45	9.45	-81.91
756	0	D10K: Other PT Losses	52.35	71.68	33.01	33.01	71.68
756	1	D10K: Other PT Losses	52.35	52.51	52.18	52.18	52.51
756	2	D10K: Other PT Losses	52.35	33.33	71.36	71.36	33.33
759	0	D10K: Other PT Losses	-34.58	14.11	-83.29	-83.28	14.12
759	1	D10K: Other PT Losses	-34.58	-32.92	-36.26	-36.25	-32.91
759	2	D10K: Other PT Losses	-34.58	-79.95	10.78	10.78	-79.94
762	0	D10K: Other PT Losses	54.93	76.80	33.05	33.06	76.80
762	1	D10K: Other PT Losses	54.93	54.95	54.91	54.91	54.95
762	2	D10K: Other PT Losses	54.93	33.10	76.76	76.76	33.10
765	0	D10K: Other PT Losses	-36.90	12.55	-86.38	-86.36	12.57
765	1	D10K: Other PT Losses	-36.90	-37.01	-36.81	-36.80	-37.00
765	2	D10K: Other PT Losses	-36.90	-86.58	12.77	12.77	-86.58
768	0	D10K: Other PT Losses	62.71	100.43	24.98	25.00	100.44
768	1	D10K: Other PT Losses	62.71	66.66	58.76	58.77	66.67
768	2	D10K: Other PT Losses	62.71	32.89	92.54	92.53	32.89

			PT RELAXATION (PS)				
Member	Station	Result Case	(P/A) @ Centroid (kips/ft²)	Normal Stress @ Point 1 (kips/ft²)	Normal Stress @ Point 2 (kips/ft²)	Normal Stress @ Point 3 (kips/ft²)	Normal Stress @ Point 4 (kips/ft²)
705	0	D10K: Other PT Losses	0.69	1.02	0.35	0.35	1.02
705	1	D10K: Other PT Losses	0.69	0.78	0.60	0.60	0.78
705	2	D10K: Other PT Losses	0.69	0.53	0.85	0.85	0.53
708	0	D10K: Other PT Losses	-0.11	-2.14	1.93	1.93	-2.14
708	1	D10K: Other PT Losses	-0.11	-0.26	0.04	0.04	-0.26
708	2	D10K: Other PT Losses	-0.11	1.63	-1.84	-1.84	1.63
711	0	D10K: Other PT Losses	0.04	0.09	-0.02	-0.02	0.09
711	1	D10K: Other PT Losses	0.04	0.00	0.07	0.07	0.00
711	2	D10K: Other PT Losses	0.04	-0.10	0.17	0.17	-0.10
714	0	D10K: Other PT Losses	0.30	-2.21	2.82	2.82	-2.21
714	1	D10K: Other PT Losses	0.30	0.21	0.40	0.40	0.21
714	2	D10K: Other PT Losses	0.30	2.63	-2.03	-2.03	2.63
717	0	D10K: Other PT Losses	-0.60	-0.34	-0.85	-0.85	-0.34
717	1	D10K: Other PT Losses	-0.60	-0.69	-0.50	-0.50	-0.69
717	2	D10K: Other PT Losses	-0.60	-1.04	-0.15	-0.15	-1.04
720	0	D10K: Other PT Losses	0.69	3.02	-1.65	-1.65	3.02
720	1	D10K: Other PT Losses	0.69	0.68	0.69	0.69	0.68
720	2	D10K: Other PT Losses	0.69	-1.65	3.03	3.03	-1.65
723	0	D10K: Other PT Losses	-1.00	-0.53	-1.47	-1.47	-0.53
723	1	D10K: Other PT Losses	-1.00	-1.18	-0.82	-0.82	-1.18
723	2	D10K: Other PT Losses	-1.00	-1.83	-0.16	-0.16	-1.83
726	0	D10K: Other PT Losses	1.28	2.45	0.11	0.11	2.45
726	1	D10K: Other PT Losses	1.28	1.13	1.44	1.44	1.13
726	2	D10K: Other PT Losses	1.28	-0.19	2.76	2.76	-0.19
729	0	D10K: Other PT Losses	-1.25	-0.19	-2.31	-2.31	-0.19
729	1	D10K: Other PT Losses	-1.25	-1.49	-1.01	-1.01	-1.49
729	2	D10K: Other PT Losses	-1.25	-2.80	0.30	0.30	-2.80
732	0	D10K: Other PT Losses	2.19	3.13	1.24	1.24	3.13
732	1	D10K: Other PT Losses	2.19	2.25	2.12	2.12	2.25
732	2	D10K: Other PT Losses	2.19	1.37	3.01	3.01	1.37
741	0	D10K: Other PT Losses	3.10	3.48	2.72	2.72	3.48
741	1	D10K: Other PT Losses	3.10	3.08	3.12	3.12	3.08
741	2	D10K: Other PT Losses	3.10	2.68	3.52	3.52	2.68
744	0	D10K: Other PT Losses	-1.59	-1.81	-1.38	-1.38	-1.81
744	1	D10K: Other PT Losses	-1.59	-1.58	-1.61	-1.61	-1.58
744	2	D10K: Other PT Losses	-1.59	-1.34	-1.84	-1.84	-1.34
747	0	D10K: Other PT Losses	1.12	0.02	2.22	2.22	0.02
747	1	D10K: Other PT Losses	1.12	1.18	1.06	1.06	1.18
747	2	D10K: Other PT Losses	1.12	2.33	-0.10	-0.10	2.33
750	0	D10K: Other PT Losses	-1.23	-1.61	-0.86	-0.86	-1.61
750	1	D10K: Other PT Losses	-1.23	-1.16	-1.31	-1.31	-1.16
750	2	D10K: Other PT Losses	-1.23	-0.71	-1.76	-1.76	-0.71
753	0	D10K: Other PT Losses	0.92	-0.17	2.01	2.01	-0.17
753	1	D10K: Other PT Losses	0.92	0.87	0.96	0.96	0.87
753	2	D10K: Other PT Losses	0.92	1.92	-0.09	-0.09	1.92
756	0	D10K: Other PT Losses	-0.80	-1.03	-0.57	-0.57	-1.03
756	1	D10K: Other PT Losses	-0.80	-0.70	-0.90	-0.90	-0.70
756	2	D10K: Other PT Losses	-0.80	-0.37	-1.23	-1.23	-0.37
759	0	D10K: Other PT Losses	0.52	-0.24	1.28	1.28	-0.24
759	1	D10K: Other PT Losses	0.52	0.48	0.56	0.56	0.48
759	2	D10K: Other PT Losses	0.52	1.21	-0.17	-0.17	1.21
762	0	D10K: Other PT Losses	-0.07	-0.04	-0.11	-0.11	-0.04
762	1	D10K: Other PT Losses	-0.07	0.09	-0.24	-0.24	0.09
762	2	D10K: Other PT Losses	-0.07	0.22	-0.36	-0.36	0.22
765	0	D10K: Other PT Losses	0.18	-0.10	0.46	0.46	-0.10
765	1	D10K: Other PT Losses	0.18	0.24	0.11	0.11	0.25
765	2	D10K: Other PT Losses	0.18	0.59	-0.24	-0.24	0.59
768	0	D10K: Other PT Losses	0.93	1.10	0.75	0.75	1.10
768	1	D10K: Other PT Losses	0.93	1.14	0.71	0.72	1.14
768	2	D10K: Other PT Losses	0.93	1.17	0.68	0.68	1.17

			OTHER PT LOSSES (PS)				
Member	Station	Result Case	(P/A) @ Centroid (kips/ft²)	Normal Stress @ Point 1 (kips/ft²)	Normal Stress @ Point 2 (kips/ft²)	Normal Stress @ Point 3 (kips/ft²)	Normal Stress @ Point 4 (kips/ft²)
705	0	D10K: Other PT Losses	1.38	2.93	-0.16	-0.16	2.93
705	1	D10K: Other PT Losses	1.38	1.98	0.78	0.78	1.98
705	2	D10K: Other PT Losses	1.38	1.04	1.73	1.73	1.04
708	0	D10K: Other PT Losses	0.22	-7.84	8.27	8.27	-7.84
708	1	D10K: Other PT Losses	0.22	-0.60	1.03	1.03	-0.59
708	2	D10K: Other PT Losses	0.22	6.65	-6.22	-6.22	6.65
711	0	D10K: Other PT Losses	-1.02	-0.39	-1.66	-1.66	-0.39
711	1	D10K: Other PT Losses	-1.02	-0.57	-1.47	-1.47	-0.57
711	2	D10K: Other PT Losses	-1.02	-0.76	-1.29	-1.28	-0.76
714	0	D10K: Other PT Losses	1.58	-8.85	12.01	12.01	-8.85
714	1	D10K: Other PT Losses	1.58	1.28	1.88	1.88	1.28
714	2	D10K: Other PT Losses	1.58	11.41	-8.25	-8.25	11.41
717	0	D10K: Other PT Losses	-3.08	-1.62	-4.55	-4.55	-1.62
717	1	D10K: Other PT Losses	-3.08	-2.95	-3.22	-3.22	-2.95
717	2	D10K: Other PT Losses	-3.08	-4.27	-1.90	-1.90	-4.27
720	0	D10K: Other PT Losses	2.57	11.44	-6.30	-6.30	11.44
720	1	D10K: Other PT Losses	2.57	2.79	2.36	2.36	2.79
720	2	D10K: Other PT Losses	2.57	-5.87	11.02	11.02	-5.87
723	0	D10K: Other PT Losses	-3.74	-1.73	-5.75	-5.75	-1.73
723	1	D10K: Other PT Losses	-3.74	-4.09	-3.39	-3.39	-4.09
723	2	D10K: Other PT Losses	-3.74	-6.46	-1.03	-1.03	-6.45
726	0	D10K: Other PT Losses	3.85	7.86	-0.16	-0.15	7.86
726	1	D10K: Other PT Losses	3.85	3.62	4.08	4.08	3.62
726	2	D10K: Other PT Losses	3.85	-0.62	8.32	8.32	-0.62
729	0	D10K: Other PT Losses	-3.70	-0.29	-7.11	-7.11	-0.29
729	1	D10K: Other PT Losses	-3.70	-4.53	-2.87	-2.87	-4.53
729	2	D10K: Other PT Losses	-3.70	-8.76	1.36	1.36	-8.76
732	0	D10K: Other PT Losses	5.78	8.11	3.46	3.46	8.11
732	1	D10K: Other PT Losses	5.78	5.91	5.66	5.66	5.91
732	2	D10K: Other PT Losses	5.78	3.70	7.87	7.87	3.70
741	0	D10K: Other PT Losses	9.73	11.13	8.33	8.33	11.13
741	1	D10K: Other PT Losses	9.73	9.35	10.10	10.10	9.35
741	2	D10K: Other PT Losses	9.73	7.57	11.88	11.88	7.57
744	0	D10K: Other PT Losses	-5.53	-6.26	-4.81	-4.81	-6.26
744	1	D10K: Other PT Losses	-5.53	-5.16	-5.91	-5.91	-5.16
744	2	D10K: Other PT Losses	-5.53	-4.06	-7.01	-7.01	-4.06
747	0	D10K: Other PT Losses	3.84	-0.32	8.00	8.00	-0.32
747	1	D10K: Other PT Losses	3.84	4.09	3.59	3.59	4.09
747	2	D10K: Other PT Losses	3.84	8.49	-0.82	-0.82	8.49
750	0	D10K: Other PT Losses	-4.70	-5.99	-3.41	-3.41	-5.99
750	1	D10K: Other PT Losses	-4.70	-4.33	-5.07	-5.07	-4.33
750	2	D10K: Other PT Losses	-4.70	-2.67	-6.73	-6.73	-2.67
753	0	D10K: Other PT Losses	3.48	-1.04	8.00	8.00	-1.04
753	1	D10K: Other PT Losses	3.48	3.42	3.53	3.53	3.42
753	2	D10K: Other PT Losses	3.48	7.89	-0.93	-0.93	7.89
756	0	D10K: Other PT Losses	-3.62	-4.56	-2.67	-2.67	-4.56
756	1	D10K: Other PT Losses	-3.62	-3.06	-4.18	-4.18	-3.06
756	2	D10K: Other PT Losses	-3.62	-1.55	-5.68	-5.68	-1.55
759	0	D10K: Other PT Losses	2.34	-1.21	5.88	5.88	-1.21
759	1	D10K: Other PT Losses	2.34	2.23	2.44	2.44	2.23
759	2	D10K: Other PT Losses	2.34	5.66	-0.99	-0.99	5.67
762	0	D10K: Other PT Losses	-1.36	-1.40	-1.32	-1.32	-1.40
762	1	D10K: Other PT Losses	-1.36	-0.59	-2.13	-2.13	-0.59
762	2	D10K: Other PT Losses	-1.36	0.23	-2.95	-2.95	0.23
765	0	D10K: Other PT Losses	1.54	-0.46	3.53	3.53	-0.46
765	1	D10K: Other PT Losses	1.54	2.13	0.94	0.94	2.13
765	2	D10K: Other PT Losses	1.54	4.72	-1.64	-1.64	4.72
768	0	D10K: Other PT Losses	1.71	1.22	2.20	2.20	1.22
768	1	D10K: Other PT Losses	1.71	2.58	0.84	0.84	2.58
768	2	D10K: Other PT Losses	1.71	3.94	-0.52	-0.53	3.94

			UTILITIES (DW)				
Member	Station	Result Case	(P/A) @ Centroid (kips/ft²)	Normal Stress @ Point 1 (kips/ft²)	Normal Stress @ Point 2 (kips/ft²)	Normal Stress @ Point 3 (kips/ft²)	Normal Stress @ Point 4 (kips/ft²)
705	0	D10K: Other PT Losses	-15.66	-23.19	-8.12	-8.12	-23.19
705	1	D10K: Other PT Losses	-15.66	-20.43	-10.88	-10.88	-20.43
705	2	D10K: Other PT Losses	-15.66	-17.67	-13.65	-13.64	-17.66
708	0	D10K: Other PT Losses	9.70	5.13	14.28	14.27	5.12
708	1	D10K: Other PT Losses	9.70	7.62	11.79	11.78	7.62
708	2	D10K: Other PT Losses	9.70	10.12	9.29	9.29	10.12
711	0	D10K: Other PT Losses	-4.76	-6.55	-2.97	-2.97	-6.55
711	1	D10K: Other PT Losses	-4.76	-5.78	-3.75	-3.75	-5.77
711	2	D10K: Other PT Losses	-4.76	-5.00	-4.53	-4.53	-5.00
714	0	D10K: Other PT Losses	3.87	4.34	3.41	3.41	4.33
714	1	D10K: Other PT Losses	3.87	4.11	3.64	3.64	4.11
714	2	D10K: Other PT Losses	3.87	3.88	3.87	3.87	3.88
717	0	D10K: Other PT Losses	5.66	4.16	7.17	7.17	4.16
717	1	D10K: Other PT Losses	5.66	4.80	6.53	6.53	4.80
717	2	D10K: Other PT Losses	5.66	5.44	5.89	5.89	5.44
720	0	D10K: Other PT Losses	-0.57	-5.80	4.67	4.66	-5.81
720	1	D10K: Other PT Losses	-0.57	-0.74	-0.40	-0.40	-0.74
720	2	D10K: Other PT Losses	-0.57	4.33	-5.47	-5.46	4.33
723	0	D10K: Other PT Losses	13.24	11.92	14.56	14.57	11.92
723	1	D10K: Other PT Losses	13.24	12.92	13.57	13.57	12.92
723	2	D10K: Other PT Losses	13.24	13.92	12.57	12.57	13.92
726	0	D10K: Other PT Losses	-6.34	-11.21	-1.46	-1.46	-11.22
726	1	D10K: Other PT Losses	-6.34	-7.11	-5.57	-5.57	-7.11
726	2	D10K: Other PT Losses	-6.34	-3.01	-9.68	-9.67	-3.00
729	0	D10K: Other PT Losses	15.72	17.96	13.49	13.49	17.96
729	1	D10K: Other PT Losses	15.72	16.29	15.15	15.15	16.29
729	2	D10K: Other PT Losses	15.72	14.63	16.82	16.82	14.63
732	0	D10K: Other PT Losses	-13.93	-13.94	-13.92	-13.92	-13.94
732	1	D10K: Other PT Losses	-13.93	-14.34	-13.51	-13.51	-14.35
732	2	D10K: Other PT Losses	-13.93	-14.75	-13.10	-13.11	-14.75
741	0	D10K: Other PT Losses	-2.82	-4.98	-0.65	-0.66	-4.98
741	1	D10K: Other PT Losses	-2.82	-3.13	-2.50	-2.50	-3.14
741	2	D10K: Other PT Losses	-2.82	-1.29	-4.35	-4.35	-1.29
744	0	D10K: Other PT Losses	6.39	3.85	8.94	8.94	3.84
744	1	D10K: Other PT Losses	6.39	5.57	7.22	7.21	5.57
744	2	D10K: Other PT Losses	6.39	7.30	5.49	5.48	7.30
747	0	D10K: Other PT Losses	1.47	-0.17	3.12	3.12	-0.17
747	1	D10K: Other PT Losses	1.47	0.07	2.88	2.88	0.07
747	2	D10K: Other PT Losses	1.47	0.31	2.64	2.64	0.31
750	0	D10K: Other PT Losses	3.51	5.00	2.02	2.01	5.00
750	1	D10K: Other PT Losses	3.51	3.64	3.38	3.38	3.63
750	2	D10K: Other PT Losses	3.51	2.27	4.75	4.75	2.27
753	0	D10K: Other PT Losses	-0.43	1.77	-2.63	-2.64	1.77
753	1	D10K: Other PT Losses	-0.43	-0.13	-0.74	-0.74	-0.13
753	2	D10K: Other PT Losses	-0.43	-2.02	1.15	1.15	-2.02
756	0	D10K: Other PT Losses	4.90	5.85	3.95	3.94	5.85
756	1	D10K: Other PT Losses	4.90	5.07	4.73	4.72	5.07
756	2	D10K: Other PT Losses	4.90	4.29	5.51	5.51	4.28
759	0	D10K: Other PT Losses	-0.18	1.72	-2.07	-2.07	1.72
759	1	D10K: Other PT Losses	-0.18	-0.11	-0.24	-0.24	-0.11
759	2	D10K: Other PT Losses	-0.18	-1.94	1.59	1.59	-1.94
762	0	D10K: Other PT Losses	4.01	4.72	3.31	3.30	4.71
762	1	D10K: Other PT Losses	4.01	3.90	4.12	4.12	3.90
762	2	D10K: Other PT Losses	4.01	3.08	4.94	4.94	3.08
765	0	D10K: Other PT Losses	-1.16	0.13	-2.44	-2.45	0.13
765	1	D10K: Other PT Losses	-1.16	-1.21	-1.10	-1.11	-1.21
765	2	D10K: Other PT Losses	-1.16	-2.55	0.24	0.23	-2.55
768	0	D10K: Other PT Losses	4.25	7.63	0.87	0.86	7.63
768	1	D10K: Other PT Losses	4.25	5.31	3.20	3.19	5.30
768	2	D10K: Other PT Losses	4.25	2.98	5.52	5.52	2.97

			LIVE LOAD ON FULL LENGTH OF BRIDGE (LL1)				
Member	Station	Result Case	(P/A) @ Centroid (kips/ft²)	Normal Stress @ Point 1 (kips/ft²)	Normal Stress @ Point 2 (kips/ft²)	Normal Stress @ Point 3 (kips/ft²)	Normal Stress @ Point 4 (kips/ft²)
705	0	D10K: Other PT Losses	-57.27	-84.83	-29.70	-29.72	-84.85
705	1	D10K: Other PT Losses	-57.27	-74.73	-39.81	-39.81	-74.74
705	2	D10K: Other PT Losses	-57.27	-64.64	-49.92	-49.91	-64.62
708	0	D10K: Other PT Losses	35.50	18.78	52.26	52.22	18.74
708	1	D10K: Other PT Losses	35.50	27.89	43.12	43.11	27.88
708	2	D10K: Other PT Losses	35.50	37.01	33.99	34.00	37.02
711	0	D10K: Other PT Losses	-17.42	-23.97	-10.87	-10.88	-23.97
711	1	D10K: Other PT Losses	-17.42	-21.13	-13.72	-13.72	-21.13
711	2	D10K: Other PT Losses	-17.42	-18.29	-16.57	-16.56	-18.28
714	0	D10K: Other PT Losses	14.18	15.86	12.49	12.49	15.86
714	1	D10K: Other PT Losses	14.18	15.02	13.33	13.33	15.02
714	2	D10K: Other PT Losses	14.18	14.19	14.17	14.16	14.18
717	0	D10K: Other PT Losses	20.73	15.22	26.23	26.23	15.22
717	1	D10K: Other PT Losses	20.73	17.56	23.89	23.89	17.56
717	2	D10K: Other PT Losses	20.73	19.90	21.55	21.55	19.91
720	0	D10K: Other PT Losses	-2.08	-21.22	17.08	17.06	-21.24
720	1	D10K: Other PT Losses	-2.08	-2.69	-1.46	-1.46	-2.70
720	2	D10K: Other PT Losses	-2.08	15.84	-20.01	-19.99	15.85
723	0	D10K: Other PT Losses	48.45	43.60	53.28	53.29	43.61
723	1	D10K: Other PT Losses	48.45	47.26	49.63	49.63	47.26
723	2	D10K: Other PT Losses	48.45	50.92	45.98	45.97	50.91
726	0	D10K: Other PT Losses	-23.19	-41.02	-5.34	-5.36	-41.05
726	1	D10K: Other PT Losses	-23.19	-26.01	-20.37	-20.37	-26.02
726	2	D10K: Other PT Losses	-23.19	-10.99	-35.40	-35.39	-10.98
729	0	D10K: Other PT Losses	57.52	65.69	49.34	49.35	65.71
729	1	D10K: Other PT Losses	57.52	59.61	55.44	55.44	59.61
729	2	D10K: Other PT Losses	57.52	53.53	61.54	61.52	53.51
732	0	D10K: Other PT Losses	-50.96	-50.98	-50.92	-50.93	-51.00
732	1	D10K: Other PT Losses	-50.96	-52.48	-49.43	-49.44	-52.49
732	2	D10K: Other PT Losses	-50.96	-53.97	-47.94	-47.95	-53.97
741	0	D10K: Other PT Losses	-10.31	-18.22	-2.39	-2.41	-18.24
741	1	D10K: Other PT Losses	-10.31	-11.47	-9.15	-9.16	-11.48
741	2	D10K: Other PT Losses	-10.31	-4.71	-15.91	-15.92	-4.72
744	0	D10K: Other PT Losses	23.39	14.07	32.72	32.70	14.06
744	1	D10K: Other PT Losses	23.39	20.39	26.40	26.38	20.38
744	2	D10K: Other PT Losses	23.39	26.71	20.08	20.07	26.69
747	0	D10K: Other PT Losses	5.40	-0.62	11.42	11.41	-0.62
747	1	D10K: Other PT Losses	5.40	0.25	10.55	10.54	0.25
747	2	D10K: Other PT Losses	5.40	1.12	9.68	9.67	1.12
750	0	D10K: Other PT Losses	12.83	18.30	7.39	7.37	18.28
750	1	D10K: Other PT Losses	12.83	13.30	12.38	12.37	13.28
750	2	D10K: Other PT Losses	12.83	8.30	17.38	17.37	8.29
753	0	D10K: Other PT Losses	-1.59	6.47	-9.64	-9.65	6.46
753	1	D10K: Other PT Losses	-1.59	-0.46	-2.71	-2.72	-0.47
753	2	D10K: Other PT Losses	-1.59	-7.39	4.22	4.21	-7.40
756	0	D10K: Other PT Losses	17.91	21.41	14.44	14.42	21.39
756	1	D10K: Other PT Losses	17.91	18.55	17.30	17.28	18.53
756	2	D10K: Other PT Losses	17.91	15.69	20.16	20.14	15.67
759	0	D10K: Other PT Losses	-0.64	6.30	-7.57	-7.59	6.29
759	1	D10K: Other PT Losses	-0.64	-0.40	-0.87	-0.89	-0.41
759	2	D10K: Other PT Losses	-0.64	-7.10	5.83	5.82	-7.11
762	0	D10K: Other PT Losses	14.67	17.26	12.09	12.07	17.24
762	1	D10K: Other PT Losses	14.67	14.27	15.08	15.07	14.25
762	2	D10K: Other PT Losses	14.67	11.27	18.07	18.06	11.26
765	0	D10K: Other PT Losses	-4.23	0.49	-8.93	-8.95	0.47
765	1	D10K: Other PT Losses	-4.23	-4.41	-4.03	-4.05	-4.43
765	2	D10K: Other PT Losses	-4.23	-9.31	0.87	0.85	-9.33
768	0	D10K: Other PT Losses	15.54	27.93	3.18	3.16	27.90
768	1	D10K: Other PT Losses	15.54	19.41	11.69	11.67	19.39
768	2	D10K: Other PT Losses	15.54	10.90	20.20	20.19	10.88

			LIVE LOAD ON MAIN SPAN (LL2)				
Member	Station	Result Case	(P/A) @ Centroid (kips/ft²)	Normal Stress @ Point 1 (kips/ft²)	Normal Stress @ Point 2 (kips/ft²)	Normal Stress @ Point 3 (kips/ft²)	Normal Stress @ Point 4 (kips/ft²)
705	0	D10K: Other PT Losses	-67.10	-96.50	-37.66	-37.71	-96.55
705	1	D10K: Other PT Losses	-67.10	-85.99	-48.21	-48.22	-86.00
705	2	D10K: Other PT Losses	-67.10	-75.48	-58.76	-58.72	-75.44
708	0	D10K: Other PT Losses	39.84	17.21	62.62	62.47	17.06
708	1	D10K: Other PT Losses	39.84	30.88	48.86	48.80	30.82
708	2	D10K: Other PT Losses	39.84	44.55	35.10	35.13	44.58
711	0	D10K: Other PT Losses	-26.67	-34.19	-19.13	-19.15	-34.21
711	1	D10K: Other PT Losses	-26.67	-30.96	-22.39	-22.39	-30.95
711	2	D10K: Other PT Losses	-26.67	-27.72	-25.65	-25.63	-27.69
714	0	D10K: Other PT Losses	16.79	13.79	19.84	19.78	13.74
714	1	D10K: Other PT Losses	16.79	17.42	16.19	16.16	17.38
714	2	D10K: Other PT Losses	16.79	21.04	12.54	12.53	21.03
717	0	D10K: Other PT Losses	15.29	8.85	21.74	21.74	8.84
717	1	D10K: Other PT Losses	15.29	11.44	19.13	19.14	11.45
717	2	D10K: Other PT Losses	15.29	14.03	16.53	16.55	14.05
720	0	D10K: Other PT Losses	-1.30	-19.59	16.99	16.99	-19.59
720	1	D10K: Other PT Losses	-1.30	-2.00	-0.62	-0.61	-1.99
720	2	D10K: Other PT Losses	-1.30	15.59	-18.22	-18.20	15.61
723	0	D10K: Other PT Losses	47.29	41.79	52.79	52.80	41.80
723	1	D10K: Other PT Losses	47.29	45.73	48.85	48.85	45.74
723	2	D10K: Other PT Losses	47.29	49.68	44.90	44.91	49.68
726	0	D10K: Other PT Losses	-25.65	-44.32	-6.96	-6.98	-44.34
726	1	D10K: Other PT Losses	-25.65	-29.03	-22.27	-22.27	-29.03
726	2	D10K: Other PT Losses	-25.65	-13.74	-37.57	-37.56	-13.73
729	0	D10K: Other PT Losses	59.80	68.96	50.62	50.65	68.98
729	1	D10K: Other PT Losses	59.80	61.75	57.85	57.86	61.76
729	2	D10K: Other PT Losses	59.80	54.54	65.08	65.07	54.53
732	0	D10K: Other PT Losses	-57.14	-57.40	-56.86	-56.88	-57.42
732	1	D10K: Other PT Losses	-57.14	-59.07	-55.20	-55.22	-59.08
732	2	D10K: Other PT Losses	-57.14	-60.73	-53.55	-53.55	-60.73
741	0	D10K: Other PT Losses	13.08	11.57	14.59	14.59	11.57
741	1	D10K: Other PT Losses	13.08	13.78	12.38	12.38	13.78
741	2	D10K: Other PT Losses	13.08	16.00	10.17	10.16	15.99
744	0	D10K: Other PT Losses	1.24	1.69	0.79	0.79	1.69
744	1	D10K: Other PT Losses	1.24	2.31	0.19	0.17	2.30
744	2	D10K: Other PT Losses	1.24	2.92	-0.42	-0.44	2.90
747	0	D10K: Other PT Losses	-0.25	0.66	-1.17	-1.17	0.66
747	1	D10K: Other PT Losses	-0.25	-0.94	0.43	0.43	-0.94
747	2	D10K: Other PT Losses	-0.25	-2.54	2.03	2.03	-2.53
750	0	D10K: Other PT Losses	11.32	15.99	6.65	6.65	15.99
750	1	D10K: Other PT Losses	11.32	12.98	9.67	9.66	12.97
750	2	D10K: Other PT Losses	11.32	9.97	12.69	12.67	9.95
753	0	D10K: Other PT Losses	-7.80	-0.09	-15.53	-15.52	-0.07
753	1	D10K: Other PT Losses	-7.80	-7.68	-7.93	-7.92	-7.67
753	2	D10K: Other PT Losses	-7.80	-15.28	-0.33	-0.33	-15.27
756	0	D10K: Other PT Losses	21.66	29.50	13.81	13.82	29.50
756	1	D10K: Other PT Losses	21.66	23.46	19.86	19.86	23.45
756	2	D10K: Other PT Losses	21.66	17.42	25.91	25.90	17.40
759	0	D10K: Other PT Losses	-14.72	-1.66	-27.81	-27.78	-1.63
759	1	D10K: Other PT Losses	-14.72	-14.51	-14.95	-14.93	-14.49
759	2	D10K: Other PT Losses	-14.72	-27.35	-2.09	-2.09	-27.35
762	0	D10K: Other PT Losses	29.75	41.18	18.31	18.32	41.20
762	1	D10K: Other PT Losses	29.75	31.53	27.97	27.97	31.53
762	2	D10K: Other PT Losses	29.75	21.88	37.64	37.62	21.87
765	0	D10K: Other PT Losses	-19.44	-2.04	-36.87	-36.83	-2.00
765	1	D10K: Other PT Losses	-19.44	-16.84	-22.05	-22.03	-16.82
765	2	D10K: Other PT Losses	-19.44	-31.65	-7.23	-7.22	-31.64
768	0	D10K: Other PT Losses	39.78	56.99	22.53	22.57	57.02
768	1	D10K: Other PT Losses	39.78	44.71	34.84	34.85	44.72
768	2	D10K: Other PT Losses	39.78	32.43	47.14	47.13	32.41

			LIVE LOAD ON BACK SPAN (LL3)				
Member	Station	Result Case	(P/A) @ Centroid (kips/ft²)	Normal Stress @ Point 1 (kips/ft²)	Normal Stress @ Point 2 (kips/ft²)	Normal Stress @ Point 3 (kips/ft²)	Normal Stress @ Point 4 (kips/ft²)
705	0	D10K: Other PT Losses	9.83	11.67	7.95	7.99	11.70
705	1	D10K: Other PT Losses	9.83	11.26	8.40	8.40	11.26
705	2	D10K: Other PT Losses	9.83	10.85	8.84	8.81	10.82
708	0	D10K: Other PT Losses	-4.34	1.57	-10.36	-10.25	1.68
708	1	D10K: Other PT Losses	-4.34	-2.98	-5.73	-5.69	-2.94
708	2	D10K: Other PT Losses	-4.34	-7.54	-1.11	-1.13	-7.57
711	0	D10K: Other PT Losses	9.25	10.22	8.26	8.28	10.24
711	1	D10K: Other PT Losses	9.25	9.83	8.67	8.67	9.83
711	2	D10K: Other PT Losses	9.25	9.43	9.08	9.07	9.41
714	0	D10K: Other PT Losses	-2.61	2.07	-7.35	-7.29	2.12
714	1	D10K: Other PT Losses	-2.61	-2.39	-2.86	-2.83	-2.37
714	2	D10K: Other PT Losses	-2.61	-6.86	1.63	1.63	-6.85
717	0	D10K: Other PT Losses	5.43	6.37	4.49	4.50	6.37
717	1	D10K: Other PT Losses	5.43	6.12	4.75	4.75	6.11
717	2	D10K: Other PT Losses	5.43	5.87	5.01	5.00	5.85
720	0	D10K: Other PT Losses	-0.78	-1.63	0.09	0.08	-1.65
720	1	D10K: Other PT Losses	-0.78	-0.69	-0.84	-0.86	-0.71
720	2	D10K: Other PT Losses	-0.78	0.24	-1.78	-1.79	0.23
723	0	D10K: Other PT Losses	1.15	1.82	0.49	0.49	1.81
723	1	D10K: Other PT Losses	1.15	1.53	0.78	0.78	1.52
723	2	D10K: Other PT Losses	1.15	1.24	1.07	1.06	1.23
726	0	D10K: Other PT Losses	2.46	3.30	1.62	1.62	3.30
726	1	D10K: Other PT Losses	2.46	3.02	1.90	1.90	3.02
726	2	D10K: Other PT Losses	2.46	2.75	2.18	2.17	2.74
729	0	D10K: Other PT Losses	-2.28	-3.27	-1.29	-1.29	-3.27
729	1	D10K: Other PT Losses	-2.28	-2.14	-2.41	-2.42	-2.15
729	2	D10K: Other PT Losses	-2.28	-1.01	-3.54	-3.55	-1.02
732	0	D10K: Other PT Losses	6.18	6.41	5.95	5.95	6.42
732	1	D10K: Other PT Losses	6.18	6.59	5.77	5.78	6.59
732	2	D10K: Other PT Losses	6.18	6.76	5.60	5.60	6.76
741	0	D10K: Other PT Losses	-23.39	-29.79	-16.98	-17.00	-29.81
741	1	D10K: Other PT Losses	-23.39	-25.25	-21.53	-21.54	-25.26
741	2	D10K: Other PT Losses	-23.39	-20.71	-26.08	-26.08	-20.71
744	0	D10K: Other PT Losses	22.15	12.38	31.92	31.91	12.37
744	1	D10K: Other PT Losses	22.15	18.08	26.21	26.21	18.08
744	2	D10K: Other PT Losses	22.15	23.79	20.51	20.50	23.79
747	0	D10K: Other PT Losses	5.65	-1.28	12.59	12.58	-1.29
747	1	D10K: Other PT Losses	5.65	1.19	10.12	10.11	1.18
747	2	D10K: Other PT Losses	5.65	3.66	7.65	7.64	3.65
750	0	D10K: Other PT Losses	1.52	2.31	0.74	0.72	2.30
750	1	D10K: Other PT Losses	1.52	0.32	2.72	2.71	0.32
750	2	D10K: Other PT Losses	1.52	-1.66	4.69	4.70	-1.66
753	0	D10K: Other PT Losses	6.21	6.56	5.89	5.87	6.53
753	1	D10K: Other PT Losses	6.21	7.22	5.22	5.20	7.20
753	2	D10K: Other PT Losses	6.21	7.89	4.55	4.54	7.87
756	0	D10K: Other PT Losses	-3.74	-8.09	0.63	0.61	-8.11
756	1	D10K: Other PT Losses	-3.74	-4.91	-2.56	-2.57	-4.92
756	2	D10K: Other PT Losses	-3.74	-1.73	-5.76	-5.75	-1.73
759	0	D10K: Other PT Losses	14.08	7.96	20.24	20.20	7.92
759	1	D10K: Other PT Losses	14.08	14.11	14.08	14.05	14.08
759	2	D10K: Other PT Losses	14.08	20.26	7.92	7.90	20.24
762	0	D10K: Other PT Losses	-15.09	-23.92	-6.22	-6.25	-23.96
762	1	D10K: Other PT Losses	-15.09	-17.26	-12.89	-12.91	-17.28
762	2	D10K: Other PT Losses	-15.09	-10.61	-19.57	-19.56	-10.61
765	0	D10K: Other PT Losses	15.21	2.53	27.94	27.88	2.47
765	1	D10K: Other PT Losses	15.21	12.44	18.02	17.98	12.39
765	2	D10K: Other PT Losses	15.21	22.34	8.10	8.08	22.31
768	0	D10K: Other PT Losses	-24.24	-29.06	-19.35	-19.41	-29.12
768	1	D10K: Other PT Losses	-24.24	-25.30	-23.15	-23.18	-25.33
768	2	D10K: Other PT Losses	-24.24	-21.53	-26.94	-26.94	-21.53

			TEMPERATURE RISE (TU+)				
Member	Station	Result Case	(P/A) @ Centroid (kips/ft²)	Normal Stress @ Point 1 (kips/ft²)	Normal Stress @ Point 2 (kips/ft²)	Normal Stress @ Point 3 (kips/ft²)	Normal Stress @ Point 4 (kips/ft²)
705	0	D10K: Other PT Losses	-31.80	-34.21	-29.40	-29.40	-34.20
705	1	D10K: Other PT Losses	-31.80	-35.20	-28.41	-28.41	-35.20
705	2	D10K: Other PT Losses	-31.80	-36.18	-27.42	-27.42	-36.19
708	0	D10K: Other PT Losses	9.14	-8.71	26.97	26.99	-8.69
708	1	D10K: Other PT Losses	9.14	5.32	12.96	12.96	5.33
708	2	D10K: Other PT Losses	9.14	19.35	-1.06	-1.07	19.34
711	0	D10K: Other PT Losses	-21.54	-25.56	-17.51	-17.51	-25.56
711	1	D10K: Other PT Losses	-21.54	-23.53	-19.53	-19.54	-23.54
711	2	D10K: Other PT Losses	-21.54	-21.51	-21.56	-21.56	-21.51
714	0	D10K: Other PT Losses	2.24	-4.85	9.32	9.34	-4.84
714	1	D10K: Other PT Losses	2.24	2.69	1.79	1.80	2.70
714	2	D10K: Other PT Losses	2.24	10.23	-5.74	-5.74	10.23
717	0	D10K: Other PT Losses	-4.95	-6.85	-3.05	-3.06	-6.85
717	1	D10K: Other PT Losses	-4.95	-6.30	-3.60	-3.61	-6.30
717	2	D10K: Other PT Losses	-4.95	-5.75	-4.15	-4.16	-5.75
720	0	D10K: Other PT Losses	-4.26	-4.81	-3.70	-3.72	-4.82
720	1	D10K: Other PT Losses	-4.26	-4.57	-3.95	-3.95	-4.58
720	2	D10K: Other PT Losses	-4.26	-4.34	-4.19	-4.19	-4.34
723	0	D10K: Other PT Losses	7.92	5.87	9.97	9.96	5.87
723	1	D10K: Other PT Losses	7.92	7.41	8.43	8.42	7.41
723	2	D10K: Other PT Losses	7.92	8.96	6.89	6.88	8.95
726	0	D10K: Other PT Losses	-17.14	-27.16	-7.10	-7.11	-27.17
726	1	D10K: Other PT Losses	-17.14	-21.01	-13.26	-13.26	-21.02
726	2	D10K: Other PT Losses	-17.14	-14.86	-19.41	-19.41	-14.86
729	0	D10K: Other PT Losses	13.54	26.15	0.93	0.93	26.14
729	1	D10K: Other PT Losses	13.54	17.27	9.81	9.81	17.26
729	2	D10K: Other PT Losses	13.54	8.39	18.69	18.68	8.38
732	0	D10K: Other PT Losses	-62.93	-50.35	-75.51	-75.51	-50.35
732	1	D10K: Other PT Losses	-62.93	-64.36	-61.50	-61.50	-64.37
732	2	D10K: Other PT Losses	-62.93	-78.37	-47.49	-47.49	-78.38
741	0	D10K: Other PT Losses	-69.05	-58.34	-79.74	-79.75	-58.36
741	1	D10K: Other PT Losses	-69.05	-69.63	-68.46	-68.46	-69.64
741	2	D10K: Other PT Losses	-69.05	-80.92	-57.17	-57.18	-80.92
744	0	D10K: Other PT Losses	19.85	29.68	10.02	10.02	29.68
744	1	D10K: Other PT Losses	19.85	19.92	19.78	19.77	19.91
744	2	D10K: Other PT Losses	19.85	10.16	29.54	29.53	10.15
747	0	D10K: Other PT Losses	-18.08	-3.89	-32.26	-32.26	-3.89
747	1	D10K: Other PT Losses	-18.08	-15.55	-20.60	-20.60	-15.56
747	2	D10K: Other PT Losses	-18.08	-27.21	-8.93	-8.94	-27.22
750	0	D10K: Other PT Losses	9.66	10.60	8.72	8.71	10.60
750	1	D10K: Other PT Losses	9.66	7.87	11.45	11.44	7.87
750	2	D10K: Other PT Losses	9.66	5.15	14.17	14.17	5.14
753	0	D10K: Other PT Losses	-5.65	-3.76	-7.53	-7.53	-3.77
753	1	D10K: Other PT Losses	-5.65	-5.28	-6.01	-6.02	-5.28
753	2	D10K: Other PT Losses	-5.65	-6.79	-4.50	-4.50	-6.80
756	0	D10K: Other PT Losses	-6.82	-10.24	-3.38	-3.39	-10.25
756	1	D10K: Other PT Losses	-6.82	-8.93	-4.70	-4.70	-8.94
756	2	D10K: Other PT Losses	-6.82	-7.62	-6.02	-6.02	-7.62
759	0	D10K: Other PT Losses	4.56	-1.62	10.76	10.74	-1.64
759	1	D10K: Other PT Losses	4.56	5.16	3.97	3.96	5.15
759	2	D10K: Other PT Losses	4.56	11.94	-2.81	-2.82	11.93
762	0	D10K: Other PT Losses	-25.29	-36.61	-13.95	-13.97	-36.62
762	1	D10K: Other PT Losses	-25.29	-28.44	-22.13	-22.14	-28.45
762	2	D10K: Other PT Losses	-25.29	-20.27	-30.31	-30.31	-20.27
765	0	D10K: Other PT Losses	13.48	-3.89	30.88	30.85	-3.91
765	1	D10K: Other PT Losses	13.48	11.00	15.99	15.97	10.98
765	2	D10K: Other PT Losses	13.48	25.89	1.09	1.08	25.88
768	0	D10K: Other PT Losses	-50.46	-69.98	-30.93	-30.95	-70.00
768	1	D10K: Other PT Losses	-50.46	-56.73	-44.19	-44.20	-56.74
768	2	D10K: Other PT Losses	-50.46	-43.48	-57.45	-57.45	-43.48

			TEMPERATURE FALL (TU-)				
Member	Station	Result Case	(P/A) @ Centroid (kips/ft²)	Normal Stress @ Point 1 (kips/ft²)	Normal Stress @ Point 2 (kips/ft²)	Normal Stress @ Point 3 (kips/ft²)	Normal Stress @ Point 4 (kips/ft²)
705	0	D10K: Other PT Losses	31.80	34.21	29.40	29.40	34.20
705	1	D10K: Other PT Losses	31.80	35.20	28.41	28.41	35.20
705	2	D10K: Other PT Losses	31.80	36.18	27.42	27.42	36.19
708	0	D10K: Other PT Losses	-9.14	8.71	-26.97	-26.99	8.69
708	1	D10K: Other PT Losses	-9.14	-5.32	-12.96	-12.96	-5.33
708	2	D10K: Other PT Losses	-9.14	-19.35	1.06	1.07	-19.34
711	0	D10K: Other PT Losses	21.54	25.56	17.51	17.51	25.56
711	1	D10K: Other PT Losses	21.54	23.53	19.53	19.54	23.54
711	2	D10K: Other PT Losses	21.54	21.51	21.56	21.56	21.51
714	0	D10K: Other PT Losses	-2.24	4.85	-9.32	-9.34	4.84
714	1	D10K: Other PT Losses	-2.24	-2.69	-1.79	-1.80	-2.70
714	2	D10K: Other PT Losses	-2.24	-10.23	5.74	5.74	-10.23
717	0	D10K: Other PT Losses	4.95	6.85	3.05	3.06	6.85
717	1	D10K: Other PT Losses	4.95	6.30	3.60	3.61	6.30
717	2	D10K: Other PT Losses	4.95	5.75	4.15	4.16	5.75
720	0	D10K: Other PT Losses	4.26	4.81	3.70	3.72	4.82
720	1	D10K: Other PT Losses	4.26	4.57	3.95	3.95	4.58
720	2	D10K: Other PT Losses	4.26	4.34	4.19	4.19	4.34
723	0	D10K: Other PT Losses	-7.92	-5.87	-9.97	-9.96	-5.87
723	1	D10K: Other PT Losses	-7.92	-7.41	-8.43	-8.42	-7.41
723	2	D10K: Other PT Losses	-7.92	-8.96	-6.89	-6.88	-8.95
726	0	D10K: Other PT Losses	17.14	27.16	7.10	7.11	27.17
726	1	D10K: Other PT Losses	17.14	21.01	13.26	13.26	21.02
726	2	D10K: Other PT Losses	17.14	14.86	19.41	19.41	14.86
729	0	D10K: Other PT Losses	-13.54	-26.15	-0.93	-0.93	-26.14
729	1	D10K: Other PT Losses	-13.54	-17.27	-9.81	-9.81	-17.26
729	2	D10K: Other PT Losses	-13.54	-8.39	-18.69	-18.68	-8.38
732	0	D10K: Other PT Losses	62.93	50.35	75.51	75.51	50.35
732	1	D10K: Other PT Losses	62.93	64.36	61.50	61.50	64.37
732	2	D10K: Other PT Losses	62.93	78.37	47.49	47.49	78.38
741	0	D10K: Other PT Losses	69.05	58.34	79.74	79.75	58.36
741	1	D10K: Other PT Losses	69.05	69.63	68.46	68.46	69.64
741	2	D10K: Other PT Losses	69.05	80.92	57.17	57.18	80.92
744	0	D10K: Other PT Losses	-19.85	-29.68	-10.02	-10.02	-29.68
744	1	D10K: Other PT Losses	-19.85	-19.92	-19.78	-19.77	-19.91
744	2	D10K: Other PT Losses	-19.85	-10.16	-29.54	-29.53	-10.15
747	0	D10K: Other PT Losses	18.08	3.89	32.26	32.26	3.89
747	1	D10K: Other PT Losses	18.08	15.55	20.60	20.60	15.56
747	2	D10K: Other PT Losses	18.08	27.21	8.93	8.94	27.22
750	0	D10K: Other PT Losses	-9.66	-10.60	-8.72	-8.71	-10.60
750	1	D10K: Other PT Losses	-9.66	-7.87	-11.45	-11.44	-7.87
750	2	D10K: Other PT Losses	-9.66	-5.15	-14.17	-14.17	-5.14
753	0	D10K: Other PT Losses	5.65	3.76	7.53	7.53	3.77
753	1	D10K: Other PT Losses	5.65	5.28	6.01	6.02	5.28
753	2	D10K: Other PT Losses	5.65	6.79	4.50	4.50	6.80
756	0	D10K: Other PT Losses	6.82	10.24	3.38	3.39	10.25
756	1	D10K: Other PT Losses	6.82	8.93	4.70	4.70	8.94
756	2	D10K: Other PT Losses	6.82	7.62	6.02	6.02	7.62
759	0	D10K: Other PT Losses	-4.56	1.62	-10.76	-10.74	1.64
759	1	D10K: Other PT Losses	-4.56	-5.16	-3.97	-3.96	-5.15
759	2	D10K: Other PT Losses	-4.56	-11.94	2.81	2.82	-11.93
762	0	D10K: Other PT Losses	25.29	36.61	13.95	13.97	36.62
762	1	D10K: Other PT Losses	25.29	28.44	22.13	22.14	28.45
762	2	D10K: Other PT Losses	25.29	20.27	30.31	30.31	20.27
765	0	D10K: Other PT Losses	-13.48	3.89	-30.88	-30.85	3.91
765	1	D10K: Other PT Losses	-13.48	-11.00	-15.99	-15.97	-10.98
765	2	D10K: Other PT Losses	-13.48	-25.89	-1.09	-1.08	-25.88
768	0	D10K: Other PT Losses	50.46	69.98	30.93	30.95	70.00
768	1	D10K: Other PT Losses	50.46	56.73	44.19	44.20	56.74
768	2	D10K: Other PT Losses	50.46	43.48	57.45	57.45	43.48

			TEMPERATURE RISE + TEMP. DIFFERENTIAL				
Member	Station	Result Case	(P/A) @ Centroid (kips/ft²)	Normal Stress @ Point 1 (kips/ft²)	Normal Stress @ Point 2 (kips/ft²)	Normal Stress @ Point 3 (kips/ft²)	Normal Stress @ Point 4 (kips/ft²)
705	0	D10K: Other PT Losses	-64.53	-74.04	-55.03	-55.02	-74.03
705	1	D10K: Other PT Losses	-64.53	-73.31	-55.74	-55.75	-73.32
705	2	D10K: Other PT Losses	-64.53	-72.58	-56.46	-56.48	-72.60
708	0	D10K: Other PT Losses	16.78	-15.77	49.31	49.34	-15.74
708	1	D10K: Other PT Losses	16.78	9.51	24.05	24.05	9.52
708	2	D10K: Other PT Losses	16.78	34.80	-1.21	-1.23	34.78
711	0	D10K: Other PT Losses	-38.27	-45.59	-30.94	-30.94	-45.59
711	1	D10K: Other PT Losses	-38.27	-41.92	-34.61	-34.61	-41.93
711	2	D10K: Other PT Losses	-38.27	-38.25	-38.27	-38.28	-38.26
714	0	D10K: Other PT Losses	1.03	-10.55	12.59	12.61	-10.53
714	1	D10K: Other PT Losses	1.03	2.24	-0.18	-0.17	2.25
714	2	D10K: Other PT Losses	1.03	15.03	-12.96	-12.96	15.02
717	0	D10K: Other PT Losses	-2.95	-6.28	0.39	0.39	-6.28
717	1	D10K: Other PT Losses	-2.95	-5.22	-0.66	-0.67	-5.23
717	2	D10K: Other PT Losses	-2.95	-4.17	-1.71	-1.72	-4.18
720	0	D10K: Other PT Losses	-12.71	-16.99	-8.41	-8.43	-17.01
720	1	D10K: Other PT Losses	-12.71	-13.87	-11.54	-11.55	-13.88
720	2	D10K: Other PT Losses	-12.71	-10.75	-14.66	-14.67	-10.76
723	0	D10K: Other PT Losses	21.62	19.78	23.46	23.45	19.78
723	1	D10K: Other PT Losses	21.62	21.38	21.87	21.85	21.37
723	2	D10K: Other PT Losses	21.62	22.98	20.28	20.25	22.96
726	0	D10K: Other PT Losses	-34.57	-49.43	-19.69	-19.70	-49.45
726	1	D10K: Other PT Losses	-34.57	-40.47	-28.65	-28.66	-40.48
726	2	D10K: Other PT Losses	-34.57	-31.52	-37.61	-37.61	-31.52
729	0	D10K: Other PT Losses	29.21	51.53	6.89	6.88	51.52
729	1	D10K: Other PT Losses	29.21	33.92	24.51	24.49	33.91
729	2	D10K: Other PT Losses	29.21	16.32	42.12	42.10	16.29
732	0	D10K: Other PT Losses	-89.03	-71.62	-106.42	-106.43	-71.63
732	1	D10K: Other PT Losses	-89.03	-89.62	-88.42	-88.43	-89.63
732	2	D10K: Other PT Losses	-89.03	-107.63	-70.41	-70.42	-107.64
741	0	D10K: Other PT Losses	-107.93	-91.73	-124.10	-124.13	-91.76
741	1	D10K: Other PT Losses	-107.93	-107.32	-108.52	-108.54	-107.34
741	2	D10K: Other PT Losses	-107.93	-122.92	-92.94	-92.94	-122.92
744	0	D10K: Other PT Losses	41.32	60.36	22.29	22.29	60.36
744	1	D10K: Other PT Losses	41.32	40.21	42.44	42.44	40.21
744	2	D10K: Other PT Losses	41.32	20.07	62.60	62.58	20.05
747	0	D10K: Other PT Losses	-35.54	-9.19	-61.89	-61.89	-9.18
747	1	D10K: Other PT Losses	-35.54	-31.60	-39.47	-39.48	-31.60
747	2	D10K: Other PT Losses	-35.54	-54.01	-17.06	-17.07	-54.02
750	0	D10K: Other PT Losses	24.79	29.08	20.50	20.49	29.07
750	1	D10K: Other PT Losses	24.79	22.10	27.48	27.48	22.09
750	2	D10K: Other PT Losses	24.79	15.11	34.46	34.46	15.11
753	0	D10K: Other PT Losses	-15.91	-8.38	-23.43	-23.44	-8.39
753	1	D10K: Other PT Losses	-15.91	-15.03	-16.78	-16.79	-15.05
753	2	D10K: Other PT Losses	-15.91	-21.69	-10.13	-10.14	-21.70
756	0	D10K: Other PT Losses	-5.79	-10.14	-1.43	-1.44	-10.15
756	1	D10K: Other PT Losses	-5.79	-9.79	-1.79	-1.79	-9.80
756	2	D10K: Other PT Losses	-5.79	-9.44	-2.14	-2.14	-9.44
759	0	D10K: Other PT Losses	3.80	-4.80	12.43	12.40	-4.83
759	1	D10K: Other PT Losses	3.80	5.24	2.38	2.35	5.22
759	2	D10K: Other PT Losses	3.80	15.29	-7.68	-7.69	15.28
762	0	D10K: Other PT Losses	-45.10	-66.06	-24.12	-24.15	-66.09
762	1	D10K: Other PT Losses	-45.10	-51.54	-38.65	-38.66	-51.55
762	2	D10K: Other PT Losses	-45.10	-37.02	-53.18	-53.18	-37.02
765	0	D10K: Other PT Losses	23.20	-9.36	55.82	55.77	-9.41
765	1	D10K: Other PT Losses	23.20	18.63	27.81	27.78	18.60
765	2	D10K: Other PT Losses	23.20	46.63	-0.20	-0.22	46.61
768	0	D10K: Other PT Losses	-100.45	-139.76	-61.08	-61.14	-139.81
768	1	D10K: Other PT Losses	-100.45	-113.50	-87.37	-87.39	-113.53
768	2	D10K: Other PT Losses	-100.45	-87.25	-113.65	-113.64	-87.25

			SERVICE III-CASE A				
Member	Station	Result Case	(P/A) @ Centroid (kips/ft²)	Normal Stress @ Point 1 (kips/ft²)	Normal Stress @ Point 2 (kips/ft²)	Normal Stress @ Point 3 (kips/ft²)	Normal Stress @ Point 4 (kips/ft²)
705	0	D10K: Other PT Losses	-368	-468	-268	-268	-468
705	1	D10K: Other PT Losses	-367	-448	-287	-287	-448
705	2	D10K: Other PT Losses	-366	-369	-364	-364	-369
708	0	D10K: Other PT Losses	195	70	344	344	70
708	1	D10K: Other PT Losses	195	164	226	226	164
708	2	D10K: Other PT Losses	196	287	107	107	287
711	0	D10K: Other PT Losses	-151	-205	-97	-97	-205
711	1	D10K: Other PT Losses	-150	-208	-92	-92	-208
711	2	D10K: Other PT Losses	-149	-139	-159	-159	-139
714	0	D10K: Other PT Losses	46	113	-7	-7	113
714	1	D10K: Other PT Losses	47	62	32	32	62
714	2	D10K: Other PT Losses	48	26	86	86	26
717	0	D10K: Other PT Losses	104	61	148	148	61
717	1	D10K: Other PT Losses	105	65	146	146	65
717	2	D10K: Other PT Losses	106	123	90	90	123
720	0	D10K: Other PT Losses	-68	-235	99	99	-235
720	1	D10K: Other PT Losses	-67	-81	-53	-53	-81
720	2	D10K: Other PT Losses	-66	81	-213	-213	81
723	0	D10K: Other PT Losses	309	264	353	353	264
723	1	D10K: Other PT Losses	310	292	328	328	292
723	2	D10K: Other PT Losses	311	355	266	266	355
726	0	D10K: Other PT Losses	-213	-351	-74	-75	-351
726	1	D10K: Other PT Losses	-212	-242	-181	-181	-242
726	2	D10K: Other PT Losses	-211	-112	-310	-310	-112
729	0	D10K: Other PT Losses	375	448	301	301	448
729	1	D10K: Other PT Losses	376	397	354	354	397
729	2	D10K: Other PT Losses	376	363	390	390	363
732	0	D10K: Other PT Losses	-370	-364	-376	-376	-364
732	1	D10K: Other PT Losses	-369	-395	-343	-343	-395
732	2	D10K: Other PT Losses	-368	-377	-359	-359	-377
741	0	D10K: Other PT Losses	-176	-215	-138	-138	-215
741	1	D10K: Other PT Losses	-176	-206	-145	-145	-206
741	2	D10K: Other PT Losses	-175	-147	-202	-202	-147
744	0	D10K: Other PT Losses	227	236	219	219	236
744	1	D10K: Other PT Losses	228	211	245	245	211
744	2	D10K: Other PT Losses	229	202	256	256	202
747	0	D10K: Other PT Losses	-35	-1	-70	-70	-1
747	1	D10K: Other PT Losses	-35	-55	-15	-15	-55
747	2	D10K: Other PT Losses	-34	-108	39	39	-108
750	0	D10K: Other PT Losses	143	182	105	105	182
750	1	D10K: Other PT Losses	144	127	161	161	127
750	2	D10K: Other PT Losses	145	88	202	202	88
753	0	D10K: Other PT Losses	-47	26	-121	-121	26
753	1	D10K: Other PT Losses	-47	-41	-52	-52	-41
753	2	D10K: Other PT Losses	-46	-107	15	15	-107
756	0	D10K: Other PT Losses	85	98	73	73	98
756	1	D10K: Other PT Losses	86	71	101	101	71
756	2	D10K: Other PT Losses	87	61	113	113	61
759	0	D10K: Other PT Losses	-2	31	-30	-30	31
759	1	D10K: Other PT Losses	-1	4	-6	-6	3
759	2	D10K: Other PT Losses	-1	-16	23	23	-16
762	0	D10K: Other PT Losses	6	-14	26	26	-14
762	1	D10K: Other PT Losses	7	-18	32	32	-18
762	2	D10K: Other PT Losses	8	-4	19	19	-4
765	0	D10K: Other PT Losses	43	-3	103	103	-3
765	1	D10K: Other PT Losses	44	24	63	63	24
765	2	D10K: Other PT Losses	44	66	23	23	66
768	0	D10K: Other PT Losses	-95	-100	-89	-89	-100
768	1	D10K: Other PT Losses	-94	-118	-70	-70	-118
768	2	D10K: Other PT Losses	-93	-112	-75	-75	-112

			SERVICE III-CASE B				
Member	Station	Result Case	(P/A) @ Centroid (kips/ft²)	Normal Stress @ Point 1 (kips/ft²)	Normal Stress @ Point 2 (kips/ft²)	Normal Stress @ Point 3 (kips/ft²)	Normal Stress @ Point 4 (kips/ft²)
705	0	D10K: Other PT Losses	-376	-478	-274	-274	-478
705	1	D10K: Other PT Losses	-375	-457	-294	-294	-457
705	2	D10K: Other PT Losses	-374	-378	-371	-371	-378
708	0	D10K: Other PT Losses	198	69	352	352	68
708	1	D10K: Other PT Losses	199	167	231	231	167
708	2	D10K: Other PT Losses	200	293	108	108	293
711	0	D10K: Other PT Losses	-158	-213	-103	-103	-213
711	1	D10K: Other PT Losses	-157	-216	-99	-99	-216
711	2	D10K: Other PT Losses	-156	-146	-166	-166	-146
714	0	D10K: Other PT Losses	48	111	-2	-2	111
714	1	D10K: Other PT Losses	49	64	34	34	64
714	2	D10K: Other PT Losses	50	32	85	85	32
717	0	D10K: Other PT Losses	100	56	144	144	56
717	1	D10K: Other PT Losses	101	60	142	142	60
717	2	D10K: Other PT Losses	102	118	86	86	118
720	0	D10K: Other PT Losses	-67	-234	99	99	-234
720	1	D10K: Other PT Losses	-66	-80	-53	-53	-80
720	2	D10K: Other PT Losses	-65	81	-212	-211	81
723	0	D10K: Other PT Losses	308	263	353	353	263
723	1	D10K: Other PT Losses	309	290	327	327	290
723	2	D10K: Other PT Losses	310	354	265	265	354
726	0	D10K: Other PT Losses	-215	-353	-76	-76	-353
726	1	D10K: Other PT Losses	-214	-244	-183	-183	-244
726	2	D10K: Other PT Losses	-213	-114	-311	-311	-114
729	0	D10K: Other PT Losses	376	451	302	302	451
729	1	D10K: Other PT Losses	377	398	356	356	398
729	2	D10K: Other PT Losses	378	364	393	393	363
732	0	D10K: Other PT Losses	-375	-369	-380	-380	-369
732	1	D10K: Other PT Losses	-374	-400	-347	-347	-401
732	2	D10K: Other PT Losses	-373	-382	-364	-364	-383
741	0	D10K: Other PT Losses	-158	-191	-125	-125	-191
741	1	D10K: Other PT Losses	-157	-185	-128	-128	-185
741	2	D10K: Other PT Losses	-156	-130	-181	-181	-130
744	0	D10K: Other PT Losses	210	226	194	194	226
744	1	D10K: Other PT Losses	211	197	224	224	197
744	2	D10K: Other PT Losses	211	183	240	240	183
747	0	D10K: Other PT Losses	-40	0	-80	-80	0
747	1	D10K: Other PT Losses	-39	-56	-23	-23	-56
747	2	D10K: Other PT Losses	-39	-111	33	33	-111
750	0	D10K: Other PT Losses	142	180	104	104	180
750	1	D10K: Other PT Losses	143	127	159	159	127
750	2	D10K: Other PT Losses	144	89	198	198	89
753	0	D10K: Other PT Losses	-52	21	-126	-126	21
753	1	D10K: Other PT Losses	-52	-47	-56	-56	-47
753	2	D10K: Other PT Losses	-51	-114	12	12	-114
756	0	D10K: Other PT Losses	88	104	72	72	104
756	1	D10K: Other PT Losses	89	75	103	103	75
756	2	D10K: Other PT Losses	90	62	117	117	62
759	0	D10K: Other PT Losses	-13	25	-46	-46	25
759	1	D10K: Other PT Losses	-13	-8	-17	-17	-8
759	2	D10K: Other PT Losses	-12	-32	17	17	-32
762	0	D10K: Other PT Losses	18	5	31	31	5
762	1	D10K: Other PT Losses	19	-4	42	42	-4
762	2	D10K: Other PT Losses	20	4	35	35	4
765	0	D10K: Other PT Losses	31	-5	81	81	-5
765	1	D10K: Other PT Losses	31	14	49	49	14
765	2	D10K: Other PT Losses	32	48	17	17	48
768	0	D10K: Other PT Losses	-75	-77	-74	-74	-77
768	1	D10K: Other PT Losses	-75	-97	-52	-52	-97
768	2	D10K: Other PT Losses	-74	-94	-53	-53	-94

			SERVICE III-CASE C				
Member	Station	Result Case	(P/A) @ Centroid (kips/ft²)	Normal Stress @ Point 1 (kips/ft²)	Normal Stress @ Point 2 (kips/ft²)	Normal Stress @ Point 3 (kips/ft²)	Normal Stress @ Point 4 (kips/ft²)
705	0	D10K: Other PT Losses	-315	-391	-238	-238	-391
705	1	D10K: Other PT Losses	-314	-379	-248	-248	-379
705	2	D10K: Other PT Losses	-313	-309	-317	-317	-309
708	0	D10K: Other PT Losses	163	56	294	294	56
708	1	D10K: Other PT Losses	163	140	187	187	140
708	2	D10K: Other PT Losses	164	252	79	79	252
711	0	D10K: Other PT Losses	-129	-177	-81	-81	-177
711	1	D10K: Other PT Losses	-128	-183	-74	-74	-183
711	2	D10K: Other PT Losses	-128	-117	-138	-138	-117
714	0	D10K: Other PT Losses	33	102	-23	-23	102
714	1	D10K: Other PT Losses	34	48	19	19	48
714	2	D10K: Other PT Losses	35	9	76	76	9
717	0	D10K: Other PT Losses	92	54	130	130	54
717	1	D10K: Other PT Losses	93	55	131	131	55
717	2	D10K: Other PT Losses	94	111	77	77	111
720	0	D10K: Other PT Losses	-67	-219	86	86	-219
720	1	D10K: Other PT Losses	-66	-79	-53	-53	-79
720	2	D10K: Other PT Losses	-65	69	-198	-198	69
723	0	D10K: Other PT Losses	271	231	311	311	231
723	1	D10K: Other PT Losses	272	255	289	289	255
723	2	D10K: Other PT Losses	273	316	230	230	316
726	0	D10K: Other PT Losses	-192	-315	-69	-69	-315
726	1	D10K: Other PT Losses	-191	-219	-164	-164	-219
726	2	D10K: Other PT Losses	-190	-101	-280	-280	-101
729	0	D10K: Other PT Losses	327	393	260	260	393
729	1	D10K: Other PT Losses	328	347	308	308	347
729	2	D10K: Other PT Losses	329	319	338	338	319
732	0	D10K: Other PT Losses	-324	-318	-330	-330	-318
732	1	D10K: Other PT Losses	-323	-348	-299	-299	-348
732	2	D10K: Other PT Losses	-322	-328	-316	-316	-329
741	0	D10K: Other PT Losses	-187	-224	-150	-150	-224
741	1	D10K: Other PT Losses	-186	-217	-155	-155	-217
741	2	D10K: Other PT Losses	-185	-160	-210	-210	-160
744	0	D10K: Other PT Losses	226	234	219	219	234
744	1	D10K: Other PT Losses	227	210	245	245	210
744	2	D10K: Other PT Losses	228	200	257	257	200
747	0	D10K: Other PT Losses	-35	-2	-69	-69	-2
747	1	D10K: Other PT Losses	-35	-54	-15	-15	-54
747	2	D10K: Other PT Losses	-34	-106	38	38	-106
750	0	D10K: Other PT Losses	134	169	99	99	169
750	1	D10K: Other PT Losses	135	116	154	154	116
750	2	D10K: Other PT Losses	136	80	192	192	80
753	0	D10K: Other PT Losses	-41	27	-108	-108	26
753	1	D10K: Other PT Losses	-40	-35	-46	-46	-35
753	2	D10K: Other PT Losses	-40	-95	15	15	-95
756	0	D10K: Other PT Losses	68	74	62	62	74
756	1	D10K: Other PT Losses	69	52	85	85	52
756	2	D10K: Other PT Losses	69	47	92	92	47
759	0	D10K: Other PT Losses	10	33	-8	-8	33
759	1	D10K: Other PT Losses	10	15	6	6	15
759	2	D10K: Other PT Losses	11	6	25	25	6
762	0	D10K: Other PT Losses	-18	-47	12	12	-47
762	1	D10K: Other PT Losses	-17	-43	9	9	-43
762	2	D10K: Other PT Losses	-16	-22	-11	-11	-22
765	0	D10K: Other PT Losses	59	-2	133	132	-2
765	1	D10K: Other PT Losses	59	37	81	81	37
765	2	D10K: Other PT Losses	60	91	29	29	91
768	0	D10K: Other PT Losses	-127	-146	-107	-107	-146
768	1	D10K: Other PT Losses	-126	-153	-98	-98	-154
768	2	D10K: Other PT Losses	-125	-138	-113	-112	-138

Figg Bridge Engineers, Inc.	Project			Creating Bridges as Art
	FIU - Pedestrian Bridge			
	Designed	Project No.	Sheet	
	EDL	2262.03	of	
	Checked	Date		
		04-Oct-16		
Tallahassee Denver Philadelphia Dallas				

MEMBER STRESSES

DIAGONAL MEMBERS

Note: Stresses given at member's discontinuities (break points).
(+) tension

σ_{allow_tens} = **39.8**

Member No.	LARSA Member	Controlling Construction Stage	MEMBER STRESS (ksf)	AREA OF DIAGONAL (ft^2)	PT FORCE REQUIRED (kips)	SIZE OF PT BAR (in)	% PT STRESSED	PT FORCE/BAR (kips)	No. PT BARS REQUIRED	No. PT BARS PROVIDED	$\sigma_{compression}$ PROVIDED (ksf)	$\sigma_{tension}$ (ksf)	Tension Check ≤ 3*sqrt(f'c)
2	705	Main Span Erection	122	5.25	640	**1-3/4**	70	280	2.29	**2**	107	15	OK
3	708	D10K	352	3.5	1233	**1-3/4**	70	280	4.40	**4**	320	32	OK
4	711	EOC	-68	3.5	COMPRESSION	**N/A**	N/A	N/A	0.00	**0**	N/A	N/A	N/A
5	714	EOC	115	3.5	403	**1-3/8**	70	166	2.43	**2**	95	20	OK
6	717	D10K	148	3.5	517	**1-3/4**	70	280	1.85	**2**	160	-12	OK
7	720	EOC	103	3.5	362	**1-3/4**	70	280	1.29	**1**	80	23	OK
8	723	D10K	355	3.5	1244	**1-3/4**	70	280	4.44	**4**	320	35	OK
9	726	EOC	-64	3.5	COMPRESSION	**N/A**	N/A	N/A	0.00	**0**	N/A	N/A	N/A
10	729	D10K	451	3.5	1578	**2-1/2**	50	389	4.06	**4**	445	6	OK
11	732	Main Span Erection	160	3.5	560	**1-3/4**	70	280	2.00	**2**	160	0	OK
14	741	D10K	-125	3.5	COMPRESSION	**N/A**	N/A	N/A	0.00	**0**	N/A	N/A	N/A
15	744	D10K	257	3.5	898	**1-3/4**	60	240	3.74	**4**	274	-18	OK
16	747	D10K	39	3.5	138	**1-3/8**	60	142	0.97	**1**	41	-1	OK
17	750	D10K	202	3.5	707	**1-3/8**	70	166	4.26	**4**	190	12	OK
18	753	EOC	28	3.5	99	**1-3/8**	50	119	0.84	**1**	34	-6	OK
19	756	D10K	117	3.5	411	**1-3/8**	70	166	2.47	**2**	95	22	OK
20	759	EOC	36	3.5	125	**1-3/8**	60	142	0.88	**1**	41	-5	OK
21	762	EOC	55	3.5	192	**1-3/8**	50	119	1.62	**2**	68	-13	OK
22	765	D10K	133	3.5	464	**1-3/8**	70	166	2.80	**2**	95	38	OK
23	768	EOC	29	3.5	103	**1-3/8**	50	119	0.87	**2**	68	-38	OK

Figg Bridge Engineers, Inc.	Project: FIU - Pedestrian Bridge			Creating Bridges as Art
Tallahassee Denver Philadelphia Dallas	Designed: EDL	Project No.: 2262.03	Sheet: of	
	Checked:	Date: 04-Oct-16		

COMPRESSION STRESS CHECK (SRV I)
SUM OF EFFECTIVE PRESTRESS AND PERMANENT LOADS - ASSEMBLE ALL MODEL

DIAGONAL MEMBERS

	Typ. Diagonal	End Diagonal
A (ft^2)	3.5	5.25
c (ft)	1.0	1.5
I (ft^4)	1.17	3.94
f'c (ksi)	8.50	
σ_{allow} (ksf)	551	(0.45*f'c)

(-) tension

Member No.	LARSA Member	Axial Stress - PT Bars (ksf)	Applied Loads - P (k)	Applied Loads P/A (ksf)	Applied Loads - M_y (k*ft)	Applied Loads M_y*c/ I (ksf)	Total Compression Stress (ksf)	Check $\sigma_{comp} <= \sigma_{allow}$
*2	705	0	1860	354	212	81	435	OK
3	708	320	-523	-149	121	103	274	OK
4	711	0	554	158	62	53	211	OK
5	714	95	-114	-33	73	63	125	OK
6	717	160	-240	-69	47	40	132	OK
7	720	80	247	70	178	152	303	OK
8	723	320	-826	-236	51	44	128	OK
9	726	0	739	211	156	134	345	OK
10	729	445	-1035	-296	54	46	195	OK
*11	732	0	1459	417	30	26	443	OK
14	741	0	871	249	22	19	268	OK
15	744	274	-569	-162	11	9	121	OK
16	747	41	198	57	93	79	177	OK
17	750	190	-384	-110	51	44	124	OK
18	753	34	181	52	81	69	155	OK
19	756	95	-230	-66	29	25	54	OK
20	759	41	21	6	36	31	77	OK
21	762	68	108	31	39	34	132	OK
22	765	95	-82	-23	36	31	102	OK
23	768	0	552	158	41	35	193	OK

***PT bars in these members are temporarily stressed during main span erection.**

Main Span
Compression Diagonal Members
Strength Limit State

		Short Column Analysis - Individual Load Case Results								
Member	Joint	Load No.	Combo ID	Cross Section ID	Pu (kips)	Mux (ft*kip)	Muy (ft*kip)	Mu (ft*kip)	ϕMn (ft*kip)	ϕMn/Mu
711	707	1	STR 1/ 47	Diagonal2	1105.1	0.0	-126.2	126.2	701.9	5.562
711	707	2	STR 1/ 1	Diagonal2	928.1	0.0	-106.3	106.3	710.6	6.685
711	707	3	STR 3/ 65	Diagonal2	743.0	14.3	-80.6	81.9	651.9	7.964
711	707	4	STR 3/ 10	Diagonal2	781.0	34.3	-80.2	87.2	597.1	6.845
711	707	5	STR 1/ 47	Diagonal2	1105.1	0.0	-126.2	126.2	701.9	5.562
711	707	6	STR 1/ 7	Diagonal2	870.6	-12.3	-96.1	96.9	676.8	6.986
711	707	7	STR 1/ 47	Diagonal2	1105.1	0.0	-126.2	126.2	701.9	5.562
711	707	8	STR 3/ 1	Diagonal2	812.8	35.3	-86.1	93.1	603.1	6.481
711	707	9	STR 1/ 47	Diagonal2	1105.1	0.0	-126.2	126.2	701.9	5.562
711	707	10	STR 1/ 165	Diagonal2	466.3	0.0	-58.5	58.5	599.2	10.243
711	707	11	STR 3/ 1	Diagonal2	812.8	35.3	-86.1	93.1	603.1	6.481
711	707	12	STR 1/ 100	Diagonal2	773.8	0.0	-101.3	101.3	704.2	6.952
711	707	13	STR 1/ 7	Diagonal2	870.6	-12.3	-96.1	96.9	676.8	6.986
711	707	14	STR 3/ 190	Diagonal2	492.1	34.3	-55.7	65.4	524.4	8.017
711	707	15	STR 3/ 1	Diagonal2	812.8	35.3	-86.1	93.1	603.1	6.481
711	707	16	STR 1/ 165	Diagonal2	466.3	0.0	-58.5	58.5	599.2	10.243
711	707	17	STR 1/ 1	Diagonal2	928.1	0.0	-106.3	106.3	710.6	6.685
711	707	18	STR 1/ 165	Diagonal2	466.3	0.0	-58.5	58.5	599.2	10.243
726	717	19	STR 1/ 47	Diagonal2	1048.0	-0.1	-223.1	223.1	701.2	3.143
726	717	20	STR 3/ 1	Diagonal2	791.0	-44.9	-171.8	177.6	633.5	3.567
726	717	21	STR 3/ 189	Diagonal2	541.0	-20.7	-120.9	122.7	612.0	4.989
726	717	22	STR 1/ 7	Diagonal2	861.7	102.3	-190.0	215.8	588.6	2.728
726	717	23	STR 1/ 20	Diagonal2	1037.3	-0.1	-224.7	224.7	700.7	3.118
726	717	24	STR 3/ 1	Diagonal2	791.0	-44.9	-171.8	177.6	633.5	3.567
726	717	25	STR 1/ 20	Diagonal2	1037.3	-0.1	-224.7	224.7	700.7	3.118
726	717	26	STR 1/ 61	Diagonal2	651.9	102.3	-151.1	182.5	552.5	3.028
726	717	27	STR 1/ 25	Diagonal2	951.7	102.3	-204.6	228.7	603.1	2.637
726	717	28	STR 3/ 190	Diagonal2	512.4	-3.7	-118.2	118.3	624.0	5.276
726	717	29	STR 1/ 7	Diagonal2	861.7	102.3	-190.0	215.8	588.6	2.728
726	717	30	STR 1/ 20	Diagonal2	1037.3	-0.1	-224.7	224.7	700.7	3.118
726	717	31	STR 3/ 1	Diagonal2	791.0	-44.9	-171.8	177.6	633.5	3.567
726	717	32	STR 3/ 220	Diagonal2	523.1	-3.7	-116.6	116.7	629.8	5.399
726	717	33	STR 1/ 61	Diagonal2	651.9	102.3	-151.1	182.5	552.5	3.028
726	717	34	STR 3/ 220	Diagonal2	523.1	-3.7	-116.6	116.7	629.8	5.399
726	717	35	STR 1/ 55	Diagonal2	722.6	-0.1	-169.5	169.5	698.8	4.123
726	717	36	STR 3/ 220	Diagonal2	523.1	-3.7	-116.6	116.7	629.8	5.399

MIN C/D = 2.64

Section ID: Diagonal2

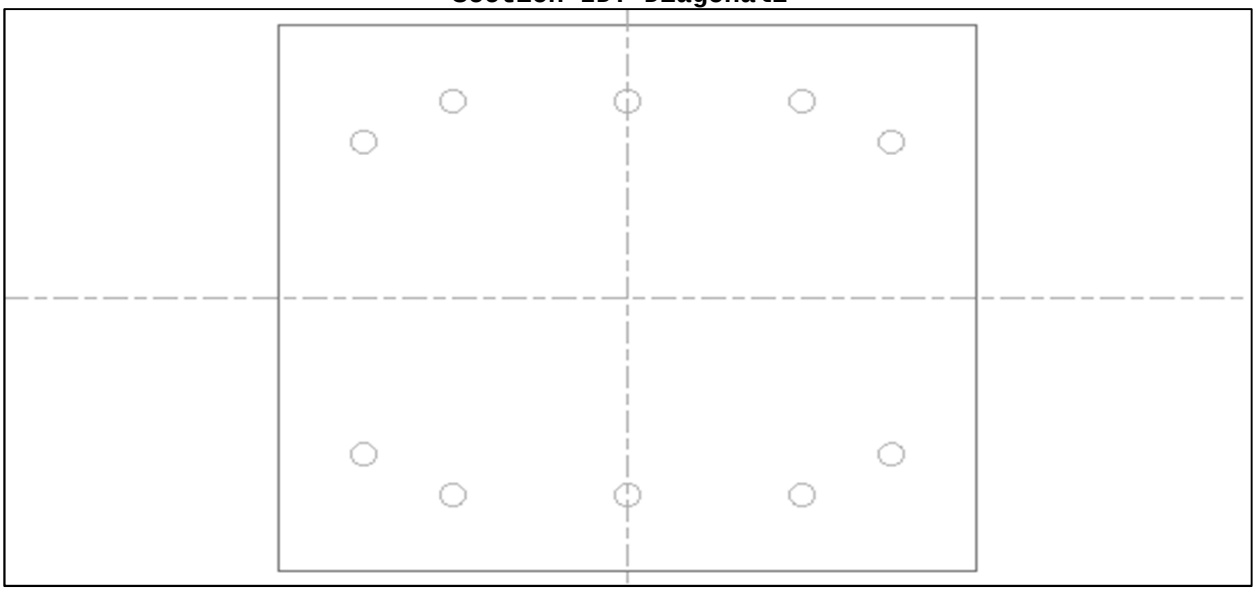

Material Properties

f'c (ksi)=	8.5	Strain @ Ult.=	0.003
f''c (ksi)=	7.12	Strain @ Max.=	0.0024
fy (ksi)=	60	E Conc. (ksi)=	4781
fr (ksi)=	0.7	E Rebar (ksi)=	29000
Tendon fpu (ksi)=	270	E Tendon (ksi)=	28500
PT Bar fpu (ksi)=	150	E PT Bar (ksi)=	30000
Gamma =	0.15		

Section Properties

Ix (in^4)=	18522	Iy (in^4)=	24192
Y top (in)=	10.5	X lft (in)=	12
Y bot (in)=	10.5	X rgt (in)=	12
Area (in^2)=	504	Ixy (in^4)=	0

Cross Section Coordinates

** Exterior Boundary Coordinates **

Point No.	X (in)	Y (in)	Point No.	X (in)	Y (in)
1	-12	10.5	2	12	10.5
3	12	-10.5	4	-12	-10.5

Rebar Information

Bar No.	X (in)	Y (in)	Dia. (in)	Area (in^2)
1	0	7.56	0.875	0.6
2	6	7.56	0.875	0.6
3	-6	7.56	0.875	0.6
4	0	-7.56	0.875	0.6
5	6	-7.56	0.875	0.6
6	-6	-7.56	0.875	0.6
7	-9.06	6	0.875	0.6
8	-9.06	-6	0.875	0.6
9	9.06	6	0.875	0.6
10	9.06	-6	0.875	0.6

Main Span
Compression Diagonal Members
Service

Service Limit State Strain Criteria
Steel Tensile Strain Limit = 0.000828
Concrete Compressive Strain Limit = 0.003

		Short Column Analysis - Individual Load Case Results								
Member	Joint	Load No.	Combo ID	Cross Section ID	P (kips)	Mx (ft*kip)	My (ft*kip)	M (ft*kip)	Mn (ft*kip)	Mn/ M
711	707	1	SRV 1/ 238	Diagonal2	905.3	2.1	-106.0	106.0	614.0	5.791
711	707	2	SRV 3/ 1	Diagonal2	622.8	0.0	-74.8	74.8	475.5	6.357
711	707	3	SRV 1/ 277	Diagonal2	528.6	3.2	-63.3	63.4	417.2	6.583
711	707	4	SRV 1/ 1	Diagonal2	648.7	5.1	-84.4	84.6	483.0	5.712
711	707	5	SRV 1/ 238	Diagonal2	905.3	2.1	-106.0	106.0	614.0	5.791
711	707	6	SRV 3/ 2	Diagonal2	596.5	-5.6	-70.2	70.4	452.8	6.430
711	707	7	SRV 1/ 238	Diagonal2	905.3	2.1	-106.0	106.0	614.0	5.791
711	707	8	SRV 3/ 2	Diagonal2	596.5	-5.6	-70.2	70.4	452.8	6.430
711	707	9	SRV 1/ 238	Diagonal2	905.3	2.1	-106.0	106.0	614.0	5.791
711	707	10	SRV 1/ 286	Diagonal2	526.8	2.1	-63.2	63.2	422.4	6.680
711	707	11	SRV 1/ 1	Diagonal2	648.7	5.1	-84.4	84.6	483.0	5.712
711	707	12	SRV 1/ 226	Diagonal2	870.6	3.2	-104.2	104.2	597.0	5.726
711	707	13	SRV 1/ 38	Diagonal2	605.4	-4.9	-78.0	78.2	459.3	5.877
711	707	14	SRV 1/ 286	Diagonal2	526.8	2.1	-63.2	63.2	422.4	6.680
711	707	15	SRV 1/ 1	Diagonal2	648.7	5.1	-84.4	84.6	483.0	5.712
711	707	16	SRV 1/ 286	Diagonal2	526.8	2.1	-63.2	63.2	422.4	6.680
711	707	17	SRV 3/ 1	Diagonal2	622.8	0.0	-74.8	74.8	475.5	6.357
711	707	18	SRV 1/ 286	Diagonal2	526.8	2.1	-63.2	63.2	422.4	6.680
726	717	19	SRV 1/ 202	Diagonal2	885.3	-2.0	-186.6	186.6	604.7	3.241
726	717	20	SRV 1/ 1	Diagonal2	691.7	-3.0	-154.6	154.6	510.6	3.302
726	717	21	SRV 1/ 79	Diagonal2	597.4	-2.0	-130.8	130.8	461.7	3.530
726	717	22	SRV 1/ 20	Diagonal2	654.2	56.3	-145.2	155.7	465.8	2.991
726	717	23	SRV 1/ 445	Diagonal2	874.6	-2.0	-188.2	188.2	599.7	3.187
726	717	24	SRV 1/ 1	Diagonal2	691.7	-3.0	-154.6	154.6	510.6	3.302
726	717	25	SRV 1/ 445	Diagonal2	874.6	-2.0	-188.2	188.2	599.7	3.187
726	717	26	SRV 1/ 38	Diagonal2	656.3	56.5	-146.0	156.6	466.8	2.982
726	717	27	SRV 1/ 445	Diagonal2	874.6	-2.0	-188.2	188.2	599.7	3.187
726	717	28	SRV 1/ 322	Diagonal2	586.7	-2.0	-132.4	132.4	456.1	3.444
726	717	29	SRV 1/ 38	Diagonal2	656.3	56.5	-146.0	156.6	466.8	2.982
726	717	30	SRV 1/ 202	Diagonal2	885.3	-2.0	-186.6	186.6	604.7	3.241
726	717	31	SRV 1/ 1	Diagonal2	691.7	-3.0	-154.6	154.6	510.6	3.302
726	717	32	SRV 1/ 79	Diagonal2	597.4	-2.0	-130.8	130.8	461.7	3.530
726	717	33	SRV 1/ 38	Diagonal2	656.3	56.5	-146.0	156.6	466.8	2.982
726	717	34	SRV 1/ 79	Diagonal2	597.4	-2.0	-130.8	130.8	461.7	3.530
726	717	35	SRV 3/ 1	Diagonal2	664.8	-0.1	-152.0	152.0	497.1	3.271
726	717	36	SRV 1/ 79	Diagonal2	597.4	-2.0	-130.8	130.8	461.7	3.530

MIN C/D = 2.98

Section ID: Diagonal2

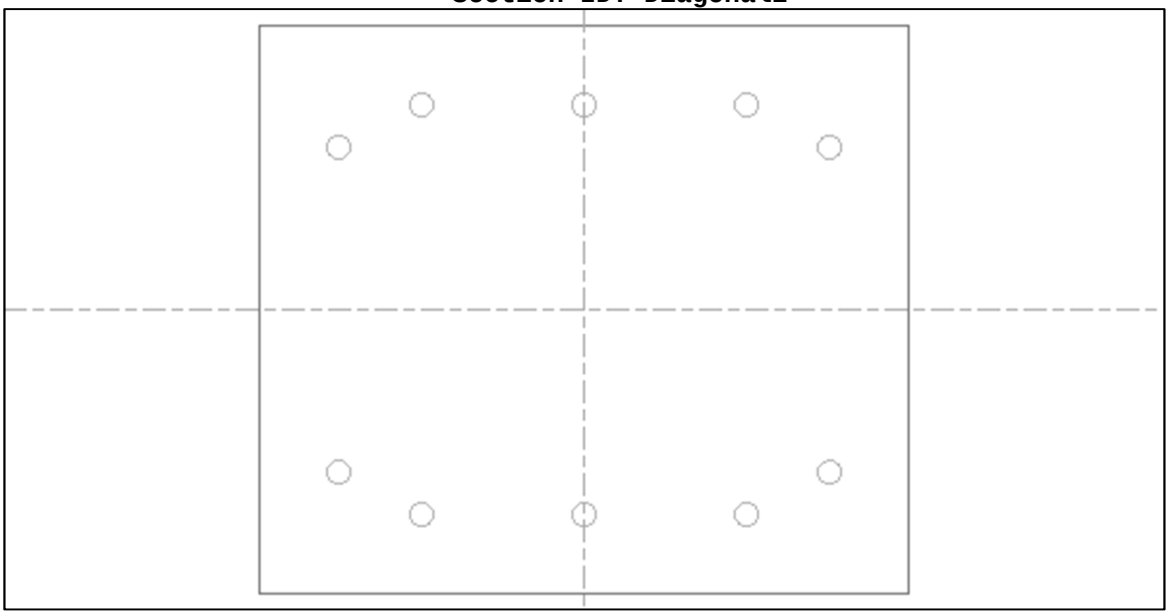

Material Properties

f'c (ksi)=	8.5	Strain @ Ult.=	0.003
f''c (ksi)=	7.12	Strain @ Max.=	0.0024
fy (ksi)=	60	E Conc. (ksi)=	4781
fr (ksi)=	0.7	E Rebar (ksi)=	29000
Tendon fpu (ksi)=	270	E Tendon (ksi)=	28500
PT Bar fpu (ksi)=	150	E PT Bar (ksi)=	30000
Gamma =	0.15		

Section Properties

Ix (in^4)=	18522	Iy (in^4)=	24192
Y top (in)=	10.5	X lft (in)=	12
Y bot (in)=	10.5	X rgt (in)=	12
Area (in^2)=	504	Ixy (in^4)=	0

Cross Section Coordinates

** Exterior Boundary Coordinates **

Point No.	X (in)	Y (in)	Point No.	X (in)	Y (in)
1	-12	10.5	2	12	10.5
3	12	-10.5	4	-12	-10.5

Rebar Information

Bar No.	X (in)	Y (in)	Dia. (in)	Area (in^2)
1	0	7.56	0.875	0.6
2	6	7.56	0.875	0.6
3	-6	7.56	0.875	0.6
4	0	-7.56	0.875	0.6
5	6	-7.56	0.875	0.6
6	-6	-7.56	0.875	0.6
7	-9.06	6	0.875	0.6
8	-9.06	-6	0.875	0.6
9	9.06	6	0.875	0.6
10	9.06	-6	0.875	0.6

Service Limit State Strain Criteria

Steel Tensile Strain Limit = 0.000828

Concrete Compressive Strain Limit = 0.003

Section, Member & Joint	SRV 1 Results	Combo ID	P (kips)	Mx (ft*kip)	My (ft*kip)	M (ft*kip)	Mn (ft*kip)	Mn/M
Section ID End Vertical **Member** 735 **Joint** 723	Max P	SRV 1/ 1	42.5	0.0	-21.0	21.0	207.5	9.882
	Max Mx	SRV 1/ 1	42.5	0.0	-21.0	21.0	207.5	9.882
	Max My	SRV 1/ 1	42.5	0.0	-21.0	21.0	207.5	9.882
	Max M	SRV 1/ 1	42.5	0.0	-21.0	21.0	207.5	9.882
	Min P	SRV 1/ 1	42.5	0.0	-21.0	21.0	207.5	9.882
	Min Mx	SRV 1/ 1	42.5	0.0	-21.0	21.0	207.5	9.882
	Min My	SRV 1/ 1	42.5	0.0	-21.0	21.0	207.5	9.882
	Min M	SRV 1/ 1	42.5	0.0	-21.0	21.0	207.5	9.882
Section ID End Vertical **Member** 735 **Joint** 724	Max P	SRV 1/ 1	32.6	0.0	189.5	189.5	352.7	1.861
	Max Mx	SRV 1/ 1	32.6	0.0	189.5	189.5	352.7	1.861
	Max My	SRV 1/ 1	32.6	0.0	189.5	189.5	352.7	1.861
	Max M	SRV 1/ 1	32.6	0.0	189.5	189.5	352.7	1.861
	Min P	SRV 1/ 1	32.6	0.0	189.5	189.5	352.7	1.861
	Min Mx	SRV 1/ 1	32.6	0.0	189.5	189.5	352.7	1.861
	Min My	SRV 1/ 1	32.6	0.0	189.5	189.5	352.7	1.861
	Min M	SRV 1/ 1	32.6	0.0	189.5	189.5	352.7	1.861

MIN C/D = 1.86

Limit State: SERVICE I

FR	Friction
LF:	1
FR1:	PT

DC	DL Structural Components & Attachments
LF:	1
DC1:	DC

Combo ID	Load Combinations
SRV 1/ 1	1.00*(FR1*1.00 + DC1*1.00)

Limit State: SERVICE I

FR Friction
LF: 1
FR1: PT

DC DL Structural Components & Attachments
LF: 1
DC1: DC

User's Load ID	Section (Row) Number	Section ID	Member ID	Joint ID	P (kips)	Mx (ft*kips)	My (ft*kips)
DC	1	End Vertical	735	723	43.2	0	99.6
DC	2	End Vertical	735	724	33.3	0	-23
PT	1	End Vertical	735	723	-0.7	0	-120.6
PT	2	End Vertical	735	724	-0.7	0	212.5

Section ID: End Vertical

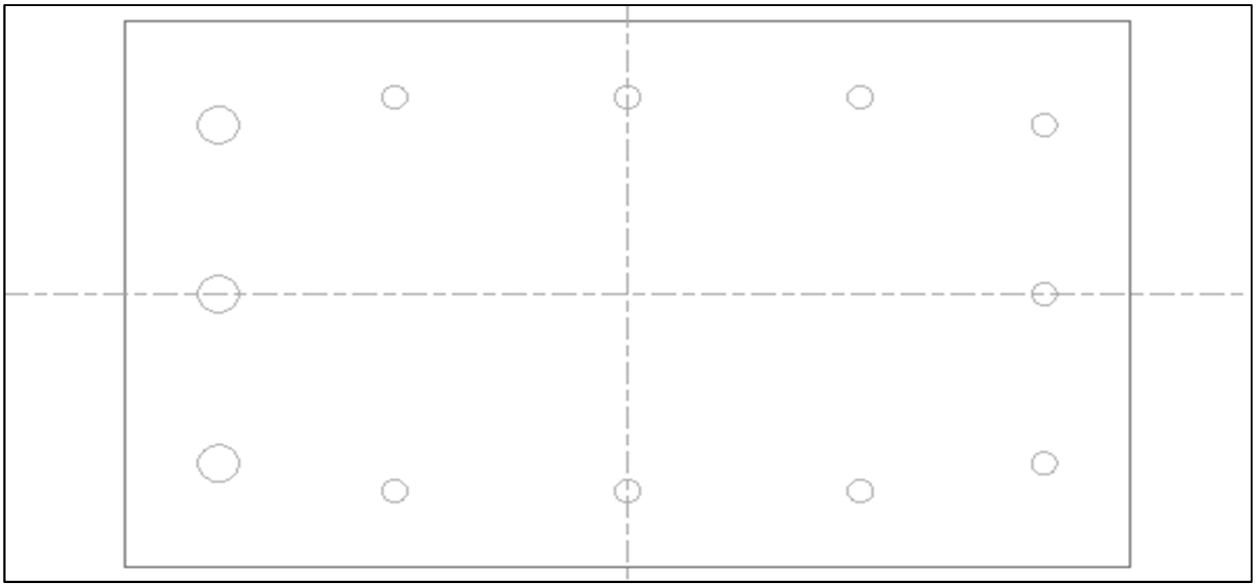

Material Properties

f'c (ksi)=	8.5	Strain @ Ult.=	0.003
f''c (ksi)=	7.12	Strain @ Max.=	0.0024
fy (ksi)=	60	E Conc. (ksi)=	4781
fr (ksi)=	0.7	E Rebar (ksi)=	29000
Tendon fpu (ksi)=	270	E Tendon (ksi)=	28500
PT Bar fpu (ksi)=	150	E PT Bar (ksi)=	30000
Gamma =	0.15		

Section Properties

Ix (in^4)=	26625	Iy (in^4)=	71861
Y top (in)=	10.5	X lft (in)=	17.25
Y bot (in)=	10.5	X rgt (in)=	17.25
Area (in^2)=	724.5	Ixy (in^4)=	0

Cross Section Coordinates

** Exterior Boundary Coordinates **

Point No.	X (in)	Y (in)	Point No.	X (in)	Y (in)
1	-17.25	10.5	2	17.25	10.5
3	17.25	-10.5	4	-17.25	-10.5

Rebar Information

Bar No.	X (in)	Y (in)	Dia. (in)	Area (in^2)
1	-14.05	6.5	1.41	1.56
2	-14.04	0	1.41	1.56
3	14.31	0	0.875	0.6
4	14.31	6.5	0.875	0.6
5	0	7.56	0.875	0.6
6	8	7.56	0.875	0.6
7	-8	7.56	0.875	0.6
8	0	-7.56	0.875	0.6
9	8	-7.56	0.875	0.6
10	-8	-7.56	0.875	0.6
11	-14.05	-6.5	1.41	1.56
12	14.31	-6.5	0.875	0.6

Section, Member & Joint	STR 1 Results	Combo ID	Pu (kips)	Mux (ft*kip)	Muy (ft*kip)	Mu (ft*kip)	ϕMn (ft*kip)	ϕMn/Mu
	Max P	STR 1/ 1	53.3	0.0	3.9	3.9	927.4	237.805
Section ID	Max Mx	STR 1/ 1	53.3	0.0	3.9	3.9	927.4	237.805
End Vertical	Max My	STR 1/ 1	53.3	0.0	3.9	3.9	927.4	237.805
Member	Max M	STR 1/ 2	38.2	0.0	-31.0	31.0	554.0	17.893
735	Min P	STR 1/ 2	38.2	0.0	-31.0	31.0	554.0	17.893
Joint	Min Mx	STR 1/ 1	53.3	0.0	3.9	3.9	927.4	237.805
723	Min My	STR 1/ 2	38.2	0.0	-31.0	31.0	554.0	17.893
	Min M	STR 1/ 1	53.3	0.0	3.9	3.9	927.4	237.805
	Max P	STR 1/ 1	40.9	0.0	183.8	183.8	913.8	4.973
Section ID	Max Mx	STR 1/ 1	40.9	0.0	183.8	183.8	913.8	4.973
End Vertical	Max My	STR 1/ 2	29.3	0.0	191.8	191.8	901.0	4.698
Member	Max M	STR 1/ 2	29.3	0.0	191.8	191.8	901.0	4.698
735	Min P	STR 1/ 2	29.3	0.0	191.8	191.8	901.0	4.698
Joint	Min Mx	STR 1/ 1	40.9	0.0	183.8	183.8	913.8	4.973
724	Min My	STR 1/ 1	40.9	0.0	183.8	183.8	913.8	4.973
	Min M	STR 1/ 1	40.9	0.0	183.8	183.8	913.8	4.973

MIN C/D = 4.70

Limit State: STRENGTH I

FR	Friction
LF:	1
FR1:	PT

DC	DL Structural Components & Attachments
LF1:	1.25
LF2:	0.9
DC1:	DC

Combo ID	Load Combinations
STR 1/ 1	1.00*(DC1*1.25 + FR1*1.00)
STR 1/ 2	1.00*(DC1*0.90 + FR1*1.00)

Limit State: STRENGTH I

FR Friction
LF: 1
FR1: PT

DC DL Structural Components & Attachments
LF1: 1.25
LF2: 0.9
DC1: DC

User's Load ID	Section (Row) Number	Section ID	Member ID	Joint ID	P (kips)	Mx (ft*kips)	My (ft*kips)
DC	1	End Vertical	735	723	43.2	0	99.6
DC	2	End Vertical	735	724	33.3	0	-23
PT	1	End Vertical	735	723	-0.7	0	-120.6
PT	2	End Vertical	735	724	-0.7	0	212.5

Section ID: End Vertical

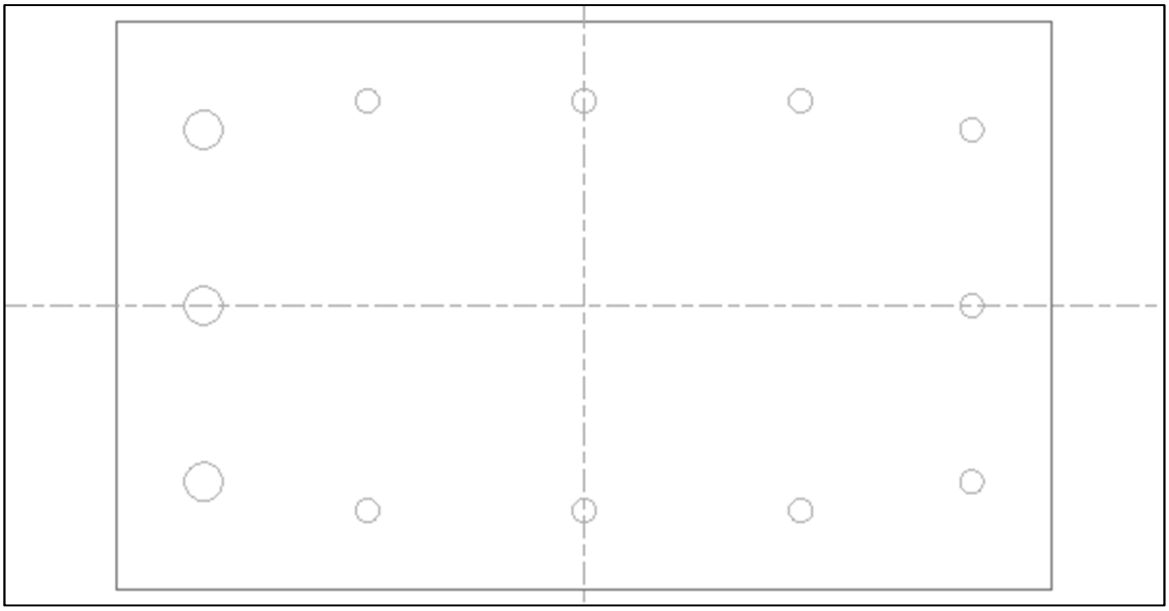

Material Properties

f'c (ksi)=	8.5	Strain @ Ult.=	0.003
f''c (ksi)=	7.12	Strain @ Max.=	0.0024
fy (ksi)=	60	E Conc. (ksi)=	4781
fr (ksi)=	0.7	E Rebar (ksi)=	29000
Tendon fpu (ksi)=	270	E Tendon (ksi)=	28500
PT Bar fpu (ksi)=	150	E PT Bar (ksi)=	30000
Gamma =	0.15		

Section Properties

Ix (in^4)=	26625	Iy (in^4)=	71861
Y top (in)=	10.5	X lft (in)=	17.25
Y bot (in)=	10.5	X rgt (in)=	17.25
Area (in^2)=	724.5	Ixy (in^4)=	0

Cross Section Coordinates

** Exterior Boundary Coordinates **

Point No.	X (in)	Y (in)	Point No.	X (in)	Y (in)
1	-17.25	10.5	2	17.25	10.5
3	17.25	-10.5	4	-17.25	-10.5

Rebar Information

Bar No.	X (in)	Y (in)	Dia. (in)	Area (in^2)
1	-14.05	6.5	1.41	1.56
2	-14.04	0	1.41	1.56
3	14.31	0	0.875	0.6
4	14.31	6.5	0.875	0.6
5	0	7.56	0.875	0.6
6	8	7.56	0.875	0.6
7	-8	7.56	0.875	0.6
8	0	-7.56	0.875	0.6
9	8	-7.56	0.875	0.6
10	-8	-7.56	0.875	0.6
11	-14.05	-6.5	1.41	1.56
12	14.31	-6.5	0.875	0.6

PT Column: AASHTO LRFD Column Analysis
Figg Bridge Engineers, Inc.
Short Column Analysis - Individual Load Cases
File Name: North End Vertical_Back Span_SRV.ptc

Service Limit State Strain Criteria
Steel Tensile Strain Limit = 0.000966 (28ksi)
Concrete Compressive Strain Limit = 0.003

		Short Column Analysis - Individual Load Case Results									
Member	Joint	Load No.	Combo ID	Cross Section ID	P (kips)	Mx (ft*kip)	My (ft*kip)	M (ft*kip)	Mn (ft*kip)	Mn/ M
771	747	1	SRV 3/ 54	North End Vertical 4	76.1	0.4	617.6	617.6	668.5	1.082
771	747	2	SRV 3/ 5	North End Vertical 4	47.8	-26.5	-132.5	135.1	562.1	4.160
771	747	3	SRV 3/ 52	North End Vertical 4	74.3	0.5	626.5	626.5	666.7	1.064
771	747	4	SRV 3/ 5	North End Vertical 4	47.8	-26.5	-132.5	135.1	562.1	4.160
771	747	5	SRV 3/ 4	North End Vertical 4	46.3	0.0	-182.7	182.7	638.3	3.494
771	747	6	SRV 3/ 5	North End Vertical 4	47.8	-26.5	-132.5	135.1	562.1	4.160
771	747	7	SRV 3/ 52	North End Vertical 4	74.3	0.5	626.5	626.5	666.7	1.064
771	747	8	SRV 3/ 44	North End Vertical 4	68.4	41.7	460.2	462.1	624.4	1.351
771	747	9	SRV 3/ 52	North End Vertical 4	74.3	0.5	626.5	626.5	666.7	1.064
771	747	10	SRV 3/ 4	North End Vertical 4	46.3	0.0	-182.7	182.7	638.3	3.494
771	747	11	SRV 3/ 8	North End Vertical 4	49.9	41.4	-72.8	83.7	459.3	5.485
771	747	12	SRV 3/ 4	North End Vertical 4	46.3	0.0	-182.7	182.7	638.3	3.494
771	747	13	SRV 3/ 8	North End Vertical 4	49.9	41.4	-72.8	83.7	459.3	5.485
771	747	14	SRV 3/ 52	North End Vertical 4	74.3	0.5	626.5	626.5	666.7	1.064
771	747	15	SRV 3/ 44	North End Vertical 4	68.4	41.7	460.2	462.1	624.4	1.351
771	747	16	SRV 3/ 31	North End Vertical 4	54.4	0.1	48.1	48.1	646.5	13.441
771	747	17	SRV 3/ 4	North End Vertical 4	46.3	0.0	-182.7	182.7	638.3	3.494
771	747	18	SRV 3/ 31	North End Vertical 4	54.4	0.1	48.1	48.1	646.5	13.441
771	748	19	SRV 3/ 4	North End Vertical 4	36.1	0.0	-394.6	394.6	628.0	1.591
771	748	20	SRV 3/ 8	North End Vertical 4	39.7	5.5	-431.5	431.5	630.1	1.460
771	748	21	SRV 3/ 4	North End Vertical 4	36.1	0.0	-394.6	394.6	628.0	1.591
771	748	22	SRV 3/ 8	North End Vertical 4	39.7	5.5	-431.5	431.5	630.1	1.460
771	748	23	SRV 3/ 4	North End Vertical 4	36.1	0.0	-394.6	394.6	628.0	1.591
771	748	24	SRV 3/ 5	North End Vertical 4	37.6	-1.3	-409.8	409.8	629.5	1.536
771	748	25	SRV 3/ 52	North End Vertical 4	64.1	0.1	-640.7	640.7	656.4	1.024
771	748	26	SRV 3/ 35	North End Vertical 4	47.8	5.6	-482.9	482.9	639.0	1.323
771	748	27	SRV 3/ 52	North End Vertical 4	64.1	0.1	-640.7	640.7	656.4	1.024
771	748	28	SRV 3/ 54	North End Vertical 4	65.9	0.1	-636.6	636.6	658.2	1.034
771	748	29	SRV 3/ 5	North End Vertical 4	37.6	-1.3	-409.8	409.8	629.5	1.536
771	748	30	SRV 3/ 52	North End Vertical 4	64.1	0.1	-640.7	640.7	656.4	1.024
771	748	31	SRV 3/ 5	North End Vertical 4	37.6	-1.3	-409.8	409.8	629.5	1.536
771	748	32	SRV 3/ 52	North End Vertical 4	64.1	0.1	-640.7	640.7	656.4	1.024
771	748	33	SRV 3/ 35	North End Vertical 4	47.8	5.6	-482.9	482.9	639.0	1.323
771	748	34	SRV 3/ 4	North End Vertical 4	36.1	0.0	-394.6	394.6	628.0	1.591
771	748	35	SRV 3/ 1	North End Vertical 4	37.3	0.0	-407.6	407.6	629.2	1.544
771	748	36	SRV 3/ 4	North End Vertical 4	36.1	0.0	-394.6	394.6	628.0	1.591

MIN C/D = 1.02

Section ID: North End Vertical 4

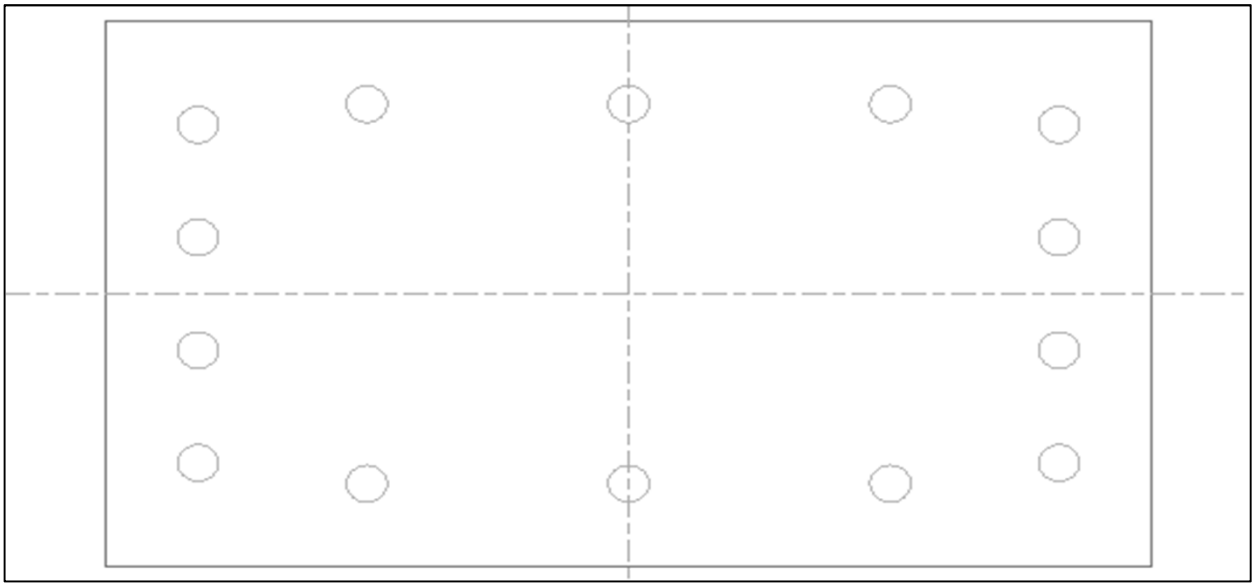

Material Properties

f'c (ksi)=	8.5	Strain @ Ult.=	0.003
f''c (ksi)=	7.12	Strain @ Max.=	0.0024
fy (ksi)=	60	E Conc. (ksi)=	4781
fr (ksi)=	0.7	E Rebar (ksi)=	29000
Tendon fpu (ksi)=	270	E Tendon (ksi)=	28500
PT Bar fpu (ksi)=	150	E PT Bar (ksi)=	30000
Gamma =	0.15		

Section Properties

Ix (in^4)=	27783	Iy (in^4)=	81648
Y top (in)=	10.5	X lft (in)=	18
Y bot (in)=	10.5	X rgt (in)=	18
Area (in^2)=	756	Ixy (in^4)=	0

Cross Section Coordinates

** Exterior Boundary Coordinates **

Point No.	X (in)	Y (in)	Point No.	X (in)	Y (in)
1	-18	10.5	2	18	10.5
3	18	-10.5	4	-18	-10.5

Rebar Information

Bar No.	X (in)	Y (in)	Dia. (in)	Area (in^2)
1	0	7.29	1.41	1.56
2	0	-7.3	1.41	1.56
3	-9	7.29	1.41	1.56
4	-9	-7.3	1.41	1.56
5	9	7.29	1.41	1.56
6	9	-7.3	1.41	1.56
7	-14.8	6.5	1.41	1.56
8	-14.8	-6.5	1.41	1.56
9	-14.8	2.17	1.41	1.56
10	-14.8	-2.17	1.41	1.56
11	14.8	6.5	1.41	1.56
12	14.8	-6.5	1.41	1.56
13	14.8	2.17	1.41	1.56
14	14.8	-2.17	1.41	1.56

PT Column: AASHTO LRFD Column Analysis
Figg Bridge Engineers, Inc.
Short Column Analysis - Individual Load Cases
File Name: North End Vertical_Back Span_STR.ptc

Short Column Analysis - Individual Load Case Results

Member	Joint	Load No.	Combo ID	Cross Section ID	Pu (kips)	Mux (ft*kip)	Muy (ft*kip)	Mu (ft*kip)	ϕMn (ft*kip)	ϕMn/Mu
771	747	1	STR 1/ 159	North End Vertical 4	89.2	0.4	565.0	565.0	1552.8	2.748
771	747	2	STR 1/ 8	North End Vertical 4	63.1	-57.9	-50.8	77.0	977.7	12.693
771	747	3	STR 3/ 115	North End Vertical 4	85.4	69.5	610.0	613.9	1512.7	2.464
771	747	4	STR 3/ 121	North End Vertical 4	45.7	161.5	-52.5	169.8	842.0	4.958
771	747	5	STR 1/ 56	North End Vertical 4	39.2	-0.1	-272.1	272.1	1501.2	5.517
771	747	6	STR 1/ 62	North End Vertical 4	42.4	-58.0	-162.2	172.3	1315.4	7.636
771	747	7	STR 3/ 115	North End Vertical 4	85.4	69.5	610.0	613.9	1512.7	2.464
771	747	8	STR 3/ 40	North End Vertical 4	76.0	190.3	478.1	514.6	1309.0	2.544
771	747	9	STR 3/ 115	North End Vertical 4	85.4	69.5	610.0	613.9	1512.7	2.464
771	747	10	STR 1/ 56	North End Vertical 4	39.2	-0.1	-272.1	272.1	1501.2	5.517
771	747	11	STR 3/ 10	North End Vertical 4	62.7	190.1	96.2	213.1	885.9	4.158
771	747	12	STR 1/ 56	North End Vertical 4	39.2	-0.1	-272.1	272.1	1501.2	5.517
771	747	13	STR 1/ 9	North End Vertical 4	67.6	90.5	79.8	120.7	981.4	8.134
771	747	14	STR 3/ 115	North End Vertical 4	85.4	69.5	610.0	613.9	1512.7	2.464
771	747	15	STR 3/ 40	North End Vertical 4	76.0	190.3	478.1	514.6	1309.0	2.544
771	747	16	STR 1/ 82	North End Vertical 4	49.8	0.2	0.2	0.3	1015.6	3590.713
771	747	17	STR 1/ 65	North End Vertical 4	44.4	0.1	-121.0	121.0	1506.6	12.451
771	747	18	STR 1/ 82	North End Vertical 4	49.8	0.2	0.2	0.3	1015.6	3590.713
771	748	19	STR 1/ 56	North End Vertical 4	30.0	0.0	-363.8	363.8	1491.7	4.100
771	748	20	STR 3/ 10	North End Vertical 4	50.0	-41.9	-487.4	489.2	1489.1	3.044
771	748	21	STR 1/ 56	North End Vertical 4	30.0	0.0	-363.8	363.8	1491.7	4.100
771	748	22	STR 1/ 9	North End Vertical 4	54.9	12.1	-503.7	503.8	1512.2	3.001
771	748	23	STR 1/ 56	North End Vertical 4	30.0	0.0	-363.8	363.8	1491.7	4.100
771	748	24	STR 3/ 10	North End Vertical 4	50.0	-41.9	-487.4	489.2	1489.1	3.044
771	748	25	STR 1/ 156	North End Vertical 4	72.6	0.1	-650.0	650.0	1535.7	2.363
771	748	26	STR 3/ 130	North End Vertical 4	32.9	-41.9	-428.2	430.2	1468.0	3.412
771	748	27	STR 1/ 156	North End Vertical 4	72.6	0.1	-650.0	650.0	1535.7	2.363
771	748	28	STR 1/ 159	North End Vertical 4	76.4	0.1	-640.9	640.9	1539.6	2.402
771	748	29	STR 1/ 8	North End Vertical 4	50.3	-2.8	-456.3	456.3	1512.7	3.315
771	748	30	STR 3/ 115	North End Vertical 4	72.7	-13.5	-644.8	644.9	1530.6	2.373
771	748	31	STR 3/ 121	North End Vertical 4	36.5	-27.2	-430.1	431.0	1483.2	3.442
771	748	32	STR 1/ 156	North End Vertical 4	72.6	0.1	-650.0	650.0	1535.7	2.363
771	748	33	STR 1/ 36	North End Vertical 4	63.0	12.2	-555.1	555.2	1520.6	2.739
771	748	34	STR 1/ 56	North End Vertical 4	30.0	0.0	-363.8	363.8	1491.7	4.100
771	748	35	STR 1/ 55	North End Vertical 4	32.5	0.0	-392.3	392.3	1494.3	3.809
771	748	36	STR 1/ 56	North End Vertical 4	30.0	0.0	-363.8	363.8	1491.7	4.100

MIN C/D = 2.36

Section ID: North End Vertical 4

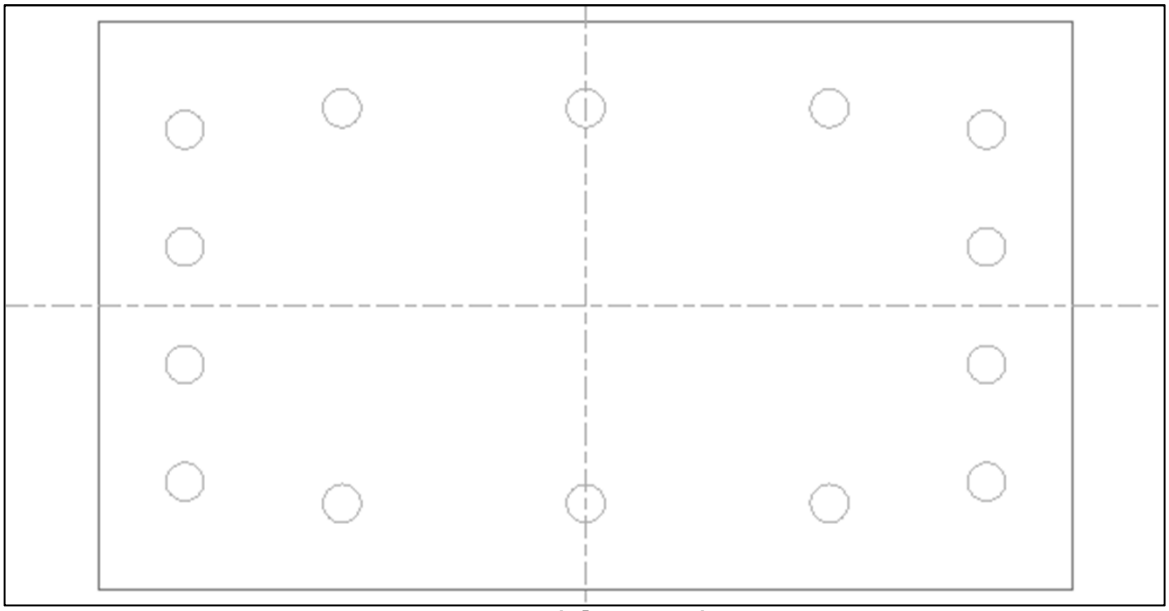

Material Properties

f'c (ksi)=	8.5	Strain @ Ult.=	0.003
f''c (ksi)=	7.12	Strain @ Max.=	0.0024
fy (ksi)=	60	E Conc. (ksi)=	4781
fr (ksi)=	0.7	E Rebar (ksi)=	29000
Tendon fpu (ksi)=	270	E Tendon (ksi)=	28500
PT Bar fpu (ksi)=	150	E PT Bar (ksi)=	30000
Gamma =	0.15		

Section Properties

Ix (in^4)=	27783	Iy (in^4)=	81648
Y top (in)=	10.5	X lft (in)=	18
Y bot (in)=	10.5	X rgt (in)=	18
Area (in^2)=	756	Ixy (in^4)=	0

Cross Section Coordinates

** Exterior Boundary Coordinates **

Point No.	X (in)	Y (in)	Point No.	X (in)	Y (in)
1	-18	10.5	2	18	10.5
3	18	-10.5	4	-18	-10.5

Rebar Information

Bar No.	X (in)	Y (in)	Dia. (in)	Area (in^2)
1	0	7.29	1.41	1.56
2	0	-7.3	1.41	1.56
3	-9	7.29	1.41	1.56
4	-9	-7.3	1.41	1.56
5	9	7.29	1.41	1.56
6	9	-7.3	1.41	1.56
7	-14.8	6.5	1.41	1.56
8	-14.8	-6.5	1.41	1.56
9	-14.8	2.17	1.41	1.56
10	-14.8	-2.17	1.41	1.56
11	14.8	6.5	1.41	1.56
12	14.8	-6.5	1.41	1.56
13	14.8	2.17	1.41	1.56
14	14.8	-2.17	1.41	1.56

Shear in Diagonals

Main Span

Member End Forces (Local)

STRI

$V = \sqrt{Fy^2 + Fz^2}$

	Max/ Min ID	Combo ID	Fy (kips)	Fz (kips)	$V_{resultant}$ (kips)
	Max Fx	STR 1/ 28	0.0	-96.0	96.0
	Max Fy	STR 1/ 1	0.0	-71.2	71.2
	Max Fz	STR 1/ 1	0.0	-71.2	71.2
	Max Mx	STR 1/ 1	0.0	-71.2	71.2
	Max My	STR 1/ 28	0.0	-96.0	96.0
Load No.	Max Mz	STR 1/ 55	0.0	-71.6	71.6
1	Max Mxy	STR 1/ 28	0.0	-96.0	96.0
	Max Mxz	STR 1/ 1	0.0	-71.2	71.2
Member	Max Myz	STR 1/ 28	0.0	-96.0	96.0
702	Min Fx	STR 1/ 55	0.0	-71.6	71.6
	Min Fy	STR 1/ 1	0.0	-71.2	71.2
Joint	Min Fz	STR 1/ 82	0.0	-96.4	96.4
701	Min Mx	STR 1/ 55	0.0	-71.6	71.6
	Min My	STR 1/ 55	0.0	-71.6	71.6
	Min Mz	STR 1/ 1	0.0	-71.2	71.2
	Min Mxy	STR 1/ 55	0.0	-71.6	71.6
	Min Mxz	STR 1/ 55	0.0	-71.6	71.6
	Min Myz	STR 1/ 55	0.0	-71.6	71.6
	Max Fx	STR 1/ 55	0.0	71.6	71.6
	Max Fy	STR 1/ 1	0.0	71.2	71.2
	Max Fz	STR 1/ 82	0.0	96.4	96.4
	Max Mx	STR 1/ 55	0.0	71.6	71.6
	Max My	STR 1/ 82	0.0	96.4	96.4
Load No.	Max Mz	STR 1/ 55	0.0	71.6	71.6
2	Max Mxy	STR 1/ 82	0.0	96.4	96.4
	Max Mxz	STR 1/ 1	0.0	71.2	71.2
Member	Max Myz	STR 1/ 82	0.0	96.4	96.4
702	Min Fx	STR 1/ 28	0.0	96.0	96.0
	Min Fy	STR 1/ 1	0.0	71.2	71.2
Joint	Min Fz	STR 1/ 1	0.0	71.2	71.2
702	Min Mx	STR 1/ 1	0.0	71.2	71.2
	Min My	STR 1/ 1	0.0	71.2	71.2
	Min Mz	STR 1/ 1	0.0	71.2	71.2
	Min Mxy	STR 1/ 1	0.0	71.2	71.2
	Min Mxz	STR 1/ 55	0.0	71.6	71.6
	Min Myz	STR 1/ 1	0.0	71.2	71.2

Shear in Diagonals

Main Span
Member End Forces (Local)
STRI

$V = \sqrt{Fy^2 + Fz^2}$

	Max/ Min ID	Combo ID	Fy (kips)	Fz (kips)	$V_{resultant}$ (kips)
	Max Fx	STR 1/ 47	0.0	-0.1	0.1
	Max Fy	STR 1/ 9	0.2	2.9	2.9
	Max Fz	STR 1/ 148	0.0	8.3	8.3
	Max Mx	STR 1/ 62	-5.6	1.1	5.7
	Max My	STR 1/ 20	0.0	-0.4	0.4
Load No.	Max Mz	STR 1/ 9	0.2	2.9	2.9
3	Max Mxy	STR 1/ 20	0.0	-0.4	0.4
	Max Mxz	STR 1/ 62	-5.6	1.1	5.7
Member	Max Myz	STR 1/ 20	0.0	-0.4	0.4
705	Min Fx	STR 1/ 165	0.0	3.3	3.3
	Min Fy	STR 1/ 8	-5.6	1.4	5.8
Joint	Min Fz	STR 1/ 56	0.0	-0.6	0.6
703	Min Mx	STR 1/ 9	0.2	2.9	2.9
	Min My	STR 1/ 193	0.0	7.9	7.9
	Min Mz	STR 1/ 62	-5.6	1.1	5.7
	Min Mxy	STR 1/ 193	0.0	7.9	7.9
	Min Mxz	STR 1/ 55	0.0	-0.5	0.5
	Min Myz	STR 1/ 193	0.0	7.9	7.9
	Max Fx	STR 1/ 165	0.0	15.5	15.5
	Max Fy	STR 1/ 8	5.6	24.8	25.4
	Max Fz	STR 1/ 2	0.0	26.5	26.5
	Max Mx	STR 1/ 9	-0.2	23.2	23.2
	Max My	STR 1/ 165	0.0	15.5	15.5
Load No.	Max Mz	STR 1/ 9	-0.2	23.2	23.2
4	Max Mxy	STR 1/ 50	0.0	18.4	18.4
	Max Mxz	STR 1/ 62	5.6	17.7	18.6
Member	Max Myz	STR 1/ 50	0.0	18.4	18.4
705	Min Fx	STR 1/ 47	0.0	26.3	26.3
	Min Fy	STR 1/ 9	-0.2	23.2	23.2
Joint	Min Fz	STR 1/ 202	0.0	10.8	10.8
704	Min Mx	STR 1/ 62	5.6	17.7	18.6
	Min My	STR 1/ 50	0.0	18.4	18.4
	Min Mz	STR 1/ 8	5.6	24.8	25.4
	Min Mxy	STR 1/ 177	0.0	15.5	15.5
	Min Mxz	STR 1/ 55	0.0	19.3	19.3
	Min Myz	STR 1/ 177	0.0	15.5	15.5

Shear in Diagonals

Main Span

Member End Forces (Local)

STRI

$V = \sqrt{Fy^2 + Fz^2}$

	Max/ Min ID	Combo ID	Fy (kips)	Fz (kips)	$V_{resultant}$ (kips)
	Max Fx	STR 1/ 165	0.0	-6.3	6.3
	Max Fy	STR 1/ 9	0.9	-16.7	16.7
	Max Fz	STR 1/ 166	0.0	-0.5	0.5
	Max Mx	STR 1/ 8	-7.0	-20.2	21.4
	Max My	STR 1/ 47	0.0	-32.4	32.4
Load No.	Max Mz	STR 1/ 9	0.9	-16.7	16.7
5	Max Mxy	STR 1/ 47	0.0	-32.4	32.4
	Max Mxz	STR 1/ 62	-7.0	-11.1	13.1
Member	Max Myz	STR 1/ 47	0.0	-32.4	32.4
708	Min Fx	STR 1/ 47	0.0	-32.4	32.4
	Min Fy	STR 1/ 8	-7.0	-20.2	21.4
Joint	Min Fz	STR 1/ 47	0.0	-32.4	32.4
705	Min Mx	STR 1/ 9	0.9	-16.7	16.7
	Min My	STR 1/ 166	0.0	-0.5	0.5
	Min Mz	STR 1/ 62	-7.0	-11.1	13.1
	Min Mxy	STR 1/ 166	0.0	-0.5	0.5
	Min Mxz	STR 1/ 3	0.0	-15.8	15.8
	Min Myz	STR 1/ 166	0.0	-0.5	0.5
	Max Fx	STR 1/ 47	0.0	34.5	34.5
	Max Fy	STR 1/ 8	7.0	22.3	23.4
	Max Fz	STR 1/ 47	0.0	34.5	34.5
	Max Mx	STR 1/ 9	-0.9	18.8	18.8
	Max My	STR 1/ 47	0.0	34.5	34.5
Load No.	Max Mz	STR 1/ 9	-0.9	18.8	18.8
6	Max Mxy	STR 1/ 47	0.0	34.5	34.5
	Max Mxz	STR 1/ 8	7.0	22.3	23.4
Member	Max Myz	STR 1/ 53	7.0	32.0	32.8
708	Min Fx	STR 1/ 165	0.0	7.8	7.8
	Min Fy	STR 1/ 9	-0.9	18.8	18.8
Joint	Min Fz	STR 1/ 166	0.0	2.0	2.0
706	Min Mx	STR 1/ 8	7.0	22.3	23.4
	Min My	STR 1/ 166	0.0	2.0	2.0
	Min Mz	STR 1/ 8	7.0	22.3	23.4
	Min Mxy	STR 1/ 193	0.0	7.5	7.5
	Min Mxz	STR 1/ 1	0.0	23.0	23.0
	Min Myz	STR 1/ 193	0.0	7.5	7.5

Shear in Diagonals

Main Span
Member End Forces (Local)
STRI

$V = \sqrt{Fy^2 + Fz^2}$

	Max/ Min ID	Combo ID	Fy (kips)	Fz (kips)	$V_{resultant}$ (kips)
	Max Fx	STR 1/ 47	0.0	3.6	3.6
	Max Fy	STR 1/ 9	0.2	4.7	4.7
	Max Fz	STR 1/ 111	0.0	4.8	4.8
	Max Mx	STR 1/ 1	0.0	4.3	4.3
	Max My	STR 1/ 47	0.0	3.6	3.6
Load No.	Max Mz	STR 1/ 9	0.2	4.7	4.7
7	Max Mxy	STR 1/ 47	0.0	3.6	3.6
	Max Mxz	STR 1/ 7	-0.9	4.5	4.6
Member	Max Myz	STR 1/ 47	0.0	3.6	3.6
711	Min Fx	STR 1/ 165	0.0	3.5	3.5
	Min Fy	STR 1/ 8	-1.1	4.5	4.6
Joint	Min Fz	STR 1/ 101	0.0	2.3	2.3
707	Min Mx	STR 1/ 7	-0.9	4.5	4.6
	Min My	STR 1/ 165	0.0	3.5	3.5
	Min Mz	STR 1/ 62	-1.1	3.2	3.4
	Min Mxy	STR 1/ 165	0.0	3.5	3.5
	Min Mxz	STR 1/ 55	0.0	3.0	3.0
	Min Myz	STR 1/ 165	0.0	3.5	3.5
	Max Fx	STR 1/ 165	0.0	7.8	7.8
	Max Fy	STR 1/ 8	1.1	11.1	11.2
	Max Fz	STR 1/ 47	0.0	12.0	12.0
	Max Mx	STR 1/ 7	0.9	11.1	11.1
	Max My	STR 1/ 112	0.0	11.2	11.2
Load No.	Max Mz	STR 1/ 9	-0.2	11.0	11.0
8	Max Mxy	STR 1/ 112	0.0	11.2	11.2
	Max Mxz	STR 1/ 8	1.1	11.1	11.2
Member	Max Myz	STR 1/ 116	1.1	11.0	11.1
711	Min Fx	STR 1/ 47	0.0	12.0	12.0
	Min Fy	STR 1/ 9	-0.2	11.0	11.0
Joint	Min Fz	STR 1/ 165	0.0	7.8	7.8
708	Min Mx	STR 1/ 1	0.0	11.3	11.3
	Min My	STR 1/ 83	0.0	8.7	8.7
	Min Mz	STR 1/ 8	1.1	11.1	11.2
	Min Mxy	STR 1/ 83	0.0	8.7	8.7
	Min Mxz	STR 1/ 1	0.0	11.3	11.3
	Min Myz	STR 1/ 83	0.0	8.7	8.7

Shear in Diagonals

Main Span

Member End Forces (Local)

STRI

$V = \sqrt{Fy^2 + Fz^2}$

	Max/ Min ID	Combo ID	Fy (kips)	Fz (kips)	$V_{resultant}$ (kips)
	Max Fx	STR 1/ 192	0.0	13.5	13.5
	Max Fy	STR 1/ 7	12.3	5.8	13.6
	Max Fz	STR 1/ 84	0.0	13.5	13.5
	Max Mx	STR 1/ 8	11.6	4.9	12.6
	Max My	STR 1/ 128	0.0	2.4	2.4
Load No.	Max Mz	STR 1/ 7	12.3	5.8	13.6
9	Max Mxy	STR 1/ 84	0.0	13.5	13.5
	Max Mxz	STR 1/ 7	12.3	5.8	13.6
Member	Max Myz	STR 1/ 88	12.3	12.1	17.3
714	Min Fx	STR 1/ 11	0.0	2.9	2.9
	Min Fy	STR 1/ 1	0.0	6.0	6.0
Joint	Min Fz	STR 1/ 20	0.0	2.4	2.4
709	Min Mx	STR 1/ 9	0.7	6.3	6.3
	Min My	STR 1/ 84	0.0	13.5	13.5
	Min Mz	STR 1/ 1	0.0	6.0	6.0
	Min Mxy	STR 1/ 128	0.0	2.4	2.4
	Min Mxz	STR 1/ 1	0.0	6.0	6.0
	Min Myz	STR 1/ 128	0.0	2.4	2.4
	Max Fx	STR 1/ 11	0.0	-2.8	2.8
	Max Fy	STR 1/ 1	0.0	-5.9	5.9
	Max Fz	STR 1/ 20	0.0	-2.3	2.3
	Max Mx	STR 1/ 9	-0.7	-6.2	6.2
	Max My	STR 1/ 23	0.0	-2.3	2.3
Load No.	Max Mz	STR 1/ 9	-0.7	-6.2	6.2
10	Max Mxy	STR 1/ 84	0.0	-13.4	13.4
	Max Mxz	STR 1/ 8	-11.6	-4.8	12.6
Member	Max Myz	STR 1/ 84	0.0	-13.4	13.4
714	Min Fx	STR 1/ 192	0.0	-13.4	13.4
	Min Fy	STR 1/ 7	-12.3	-5.7	13.6
Joint	Min Fz	STR 1/ 84	0.0	-13.4	13.4
710	Min Mx	STR 1/ 8	-11.6	-4.8	12.6
	Min My	STR 1/ 84	0.0	-13.4	13.4
	Min Mz	STR 1/ 8	-11.6	-4.8	12.6
	Min Mxy	STR 1/ 38	0.0	-3.5	3.5
	Min Mxz	STR 1/ 1	0.0	-5.9	5.9
	Min Myz	STR 1/ 38	0.0	-3.5	3.5

Shear in Diagonals

Main Span

Member End Forces (Local)

STRI

$V = \sqrt{(Fy^2 + Fz^2)}$

	Max/ Min ID	Combo ID	Fy (kips)	Fz (kips)	$V_{resultant}$ (kips)
	Max Fx	STR 1/ 123	0.0	3.5	3.5
	Max Fy	STR 1/ 7	1.4	3.3	3.6
	Max Fz	STR 1/ 112	0.0	3.7	3.7
	Max Mx	STR 1/ 1	0.0	3.1	3.1
	Max My	STR 1/ 47	0.0	2.9	2.9
Load No.	Max Mz	STR 1/ 7	1.4	3.3	3.6
11	Max Mxy	STR 1/ 53	1.2	3.2	3.4
	Max Mxz	STR 1/ 7	1.4	3.3	3.6
Member	Max Myz	STR 1/ 52	1.4	3.2	3.5
717	Min Fx	STR 1/ 82	0.0	1.9	1.9
	Min Fy	STR 1/ 1	0.0	3.1	3.1
Joint	Min Fz	STR 1/ 65	0.0	1.6	1.6
711	Min Mx	STR 1/ 7	1.4	3.3	3.6
	Min My	STR 1/ 165	0.0	2.3	2.3
	Min Mz	STR 1/ 1	0.0	3.1	3.1
	Min Mxy	STR 1/ 165	0.0	2.3	2.3
	Min Mxz	STR 1/ 1	0.0	3.1	3.1
	Min Myz	STR 1/ 165	0.0	2.3	2.3
	Max Fx	STR 1/ 82	0.0	7.8	7.8
	Max Fy	STR 1/ 1	0.0	10.4	10.4
	Max Fz	STR 1/ 11	0.0	10.7	10.7
	Max Mx	STR 1/ 7	-1.4	10.2	10.3
	Max My	STR 1/ 111	0.0	9.9	9.9
Load No.	Max Mz	STR 1/ 9	-0.2	10.0	10.0
12	Max Mxy	STR 1/ 115	-1.4	10.1	10.2
	Max Mxz	STR 1/ 7	-1.4	10.2	10.3
Member	Max Myz	STR 1/ 116	-1.2	10.1	10.2
717	Min Fx	STR 1/ 123	0.0	10.0	10.0
	Min Fy	STR 1/ 7	-1.4	10.2	10.3
Joint	Min Fz	STR 1/ 166	0.0	7.2	7.2
712	Min Mx	STR 1/ 1	0.0	10.4	10.4
	Min My	STR 1/ 101	0.0	8.1	8.1
	Min Mz	STR 1/ 8	-1.2	10.2	10.3
	Min Mxy	STR 1/ 101	0.0	8.1	8.1
	Min Mxz	STR 1/ 1	0.0	10.4	10.4
	Min Myz	STR 1/ 101	0.0	8.1	8.1

Shear in Diagonals

Main Span
Member End Forces (Local)
STRI

$V = \sqrt{Fy^2 + Fz^2}$

	Max/ Min ID	Combo ID	Fy (kips)	Fz (kips)	$V_{resultant}$ (kips)
	Max Fx	STR 1/ 49	0.0	-26.7	26.7
	Max Fy	STR 1/ 1	0.0	-30.6	30.6
	Max Fz	STR 1/ 168	0.0	-21.9	21.9
	Max Mx	STR 1/ 7	-16.6	-27.8	32.4
	Max My	STR 1/ 46	0.0	-31.6	31.6
Load No.	Max Mz	STR 1/ 1	0.0	-30.6	30.6
13	Max Mxy	STR 1/ 46	0.0	-31.6	31.6
	Max Mxz	STR 1/ 7	-16.6	-27.8	32.4
Member	Max Myz	STR 1/ 52	-16.6	-28.8	33.2
720	Min Fx	STR 1/ 168	0.0	-21.9	21.9
	Min Fy	STR 1/ 7	-16.6	-27.8	32.4
Joint	Min Fz	STR 1/ 46	0.0	-31.6	31.6
713	Min Mx	STR 1/ 1	0.0	-30.6	30.6
	Min My	STR 1/ 168	0.0	-21.9	21.9
	Min Mz	STR 1/ 7	-16.6	-27.8	32.4
	Min Mxy	STR 1/ 168	0.0	-21.9	21.9
	Min Mxz	STR 1/ 1	0.0	-30.6	30.6
	Min Myz	STR 1/ 168	0.0	-21.9	21.9
	Max Fx	STR 1/ 168	0.0	24.2	24.2
	Max Fy	STR 1/ 7	16.6	30.9	35.1
	Max Fz	STR 1/ 46	0.0	34.8	34.8
	Max Mx	STR 1/ 1	0.0	33.7	33.7
	Max My	STR 1/ 46	0.0	34.8	34.8
Load No.	Max Mz	STR 1/ 1	0.0	33.7	33.7
14	Max Mxy	STR 1/ 46	0.0	34.8	34.8
	Max Mxz	STR 1/ 7	16.6	30.9	35.1
Member	Max Myz	STR 1/ 46	0.0	34.8	34.8
720	Min Fx	STR 1/ 49	0.0	29.9	29.9
	Min Fy	STR 1/ 1	0.0	33.7	33.7
Joint	Min Fz	STR 1/ 168	0.0	24.2	24.2
714	Min Mx	STR 1/ 7	16.6	30.9	35.1
	Min My	STR 1/ 177	0.0	24.2	24.2
	Min Mz	STR 1/ 7	16.6	30.9	35.1
	Min Mxy	STR 1/ 177	0.0	24.2	24.2
	Min Mxz	STR 1/ 1	0.0	33.7	33.7
	Min Myz	STR 1/ 177	0.0	24.2	24.2

Shear in Diagonals

Main Span

Member End Forces (Local)

STRI

$V = \sqrt{Fy^2 + Fz^2}$

	Max/ Min ID	Combo ID	Fy (kips)	Fz (kips)	$V_{resultant}$ (kips)
	Max Fx	STR 1/ 168	0.0	-0.7	0.7
	Max Fy	STR 1/ 7	5.1	-0.7	5.1
	Max Fz	STR 1/ 138	0.0	0.0	0.0
	Max Mx	STR 1/ 1	0.0	-1.1	1.1
	Max My	STR 1/ 11	0.0	-1.4	1.4
Load No.	Max Mz	STR 1/ 7	5.1	-0.7	5.1
15	Max Mxy	STR 1/ 17	4.7	-0.9	4.8
	Max Mxz	STR 1/ 7	5.1	-0.7	5.1
Member	Max Myz	STR 1/ 16	5.1	-0.9	5.2
723	Min Fx	STR 1/ 46	0.0	-1.0	1.0
	Min Fy	STR 1/ 1	0.0	-1.1	1.1
Joint	Min Fz	STR 1/ 65	0.0	-1.8	1.8
715	Min Mx	STR 1/ 7	5.1	-0.7	5.1
	Min My	STR 1/ 192	0.0	-0.4	0.4
	Min Mz	STR 1/ 1	0.0	-1.1	1.1
	Min Mxy	STR 1/ 192	0.0	-0.4	0.4
	Min Mxz	STR 1/ 1	0.0	-1.1	1.1
	Min Myz	STR 1/ 192	0.0	-0.4	0.4
	Max Fx	STR 1/ 46	0.0	11.5	11.5
	Max Fy	STR 1/ 1	0.0	11.6	11.6
	Max Fz	STR 1/ 11	0.0	11.9	11.9
	Max Mx	STR 1/ 7	-5.1	11.2	12.3
	Max My	STR 1/ 19	0.0	11.8	11.8
Load No.	Max Mz	STR 1/ 7	-5.1	11.2	12.3
16	Max Mxy	STR 1/ 25	-5.1	11.4	12.5
	Max Mxz	STR 1/ 7	-5.1	11.2	12.3
Member	Max Myz	STR 1/ 19	0.0	11.8	11.8
723	Min Fx	STR 1/ 168	0.0	8.2	8.2
	Min Fy	STR 1/ 7	-5.1	11.2	12.3
Joint	Min Fz	STR 1/ 192	0.0	7.9	7.9
716	Min Mx	STR 1/ 1	0.0	11.6	11.6
	Min My	STR 1/ 195	0.0	7.9	7.9
	Min Mz	STR 1/ 1	0.0	11.6	11.6
	Min Mxy	STR 1/ 195	0.0	7.9	7.9
	Min Mxz	STR 1/ 1	0.0	11.6	11.6
	Min Myz	STR 1/ 195	0.0	7.9	7.9

Shear in Diagonals

Main Span

Member End Forces (Local)

STRI

$V = \sqrt{Fy^2 + Fz^2}$

	Max/ Min ID	Combo ID	Fy (kips)	Fz (kips)	$V_{resultant}$ (kips)
	Max Fx	STR 1/ 47	0.0	-19.2	19.2
	Max Fy	STR 1/ 1	0.0	-18.1	18.1
	Max Fz	STR 1/ 165	0.0	-11.6	11.6
	Max Mx	STR 1/ 7	-8.2	-16.3	18.2
	Max My	STR 1/ 20	0.0	-19.2	19.2
Load No.	Max Mz	STR 1/ 1	0.0	-18.1	18.1
17	Max Mxy	STR 1/ 20	0.0	-19.2	19.2
	Max Mxz	STR 1/ 7	-8.2	-16.3	18.2
Member	Max Myz	STR 1/ 25	-8.2	-17.4	19.2
726	Min Fx	STR 1/ 165	0.0	-11.6	11.6
	Min Fy	STR 1/ 7	-8.2	-16.3	18.2
Joint	Min Fz	STR 1/ 19	0.0	-19.2	19.2
717	Min Mx	STR 1/ 1	0.0	-18.1	18.1
	Min My	STR 1/ 192	0.0	-11.6	11.6
	Min Mz	STR 1/ 7	-8.2	-16.3	18.2
	Min Mxy	STR 1/ 192	0.0	-11.6	11.6
	Min Mxz	STR 1/ 1	0.0	-18.1	18.1
	Min Myz	STR 1/ 192	0.0	-11.6	11.6
	Max Fx	STR 1/ 165	0.0	16.9	16.9
	Max Fy	STR 1/ 7	8.2	23.7	25.1
	Max Fz	STR 1/ 19	0.0	26.6	26.6
	Max Mx	STR 1/ 1	0.0	25.5	25.5
	Max My	STR 1/ 46	0.0	26.6	26.6
Load No.	Max Mz	STR 1/ 1	0.0	25.5	25.5
18	Max Mxy	STR 1/ 46	0.0	26.6	26.6
	Max Mxz	STR 1/ 7	8.2	23.7	25.1
Member	Max Myz	STR 1/ 46	0.0	26.6	26.6
726	Min Fx	STR 1/ 47	0.0	26.6	26.6
	Min Fy	STR 1/ 1	0.0	25.5	25.5
Joint	Min Fz	STR 1/ 165	0.0	16.9	16.9
718	Min Mx	STR 1/ 7	8.2	23.7	25.1
	Min My	STR 1/ 168	0.0	16.9	16.9
	Min Mz	STR 1/ 7	8.2	23.7	25.1
	Min Mxy	STR 1/ 168	0.0	16.9	16.9
	Min Mxz	STR 1/ 1	0.0	25.5	25.5
	Min Myz	STR 1/ 168	0.0	16.9	16.9

Shear in Diagonals

Main Span
Member End Forces (Local)
STRI

$V = \sqrt{Fy^2 + Fz^2}$

	Max/ Min ID	Combo ID	Fy (kips)	Fz (kips)	$V_{resultant}$ (kips)
	Max Fx	STR 1/ 165	0.0	3.7	3.7
	Max Fy	STR 1/ 7	11.0	9.3	14.4
	Max Fz	STR 1/ 20	0.0	12.5	12.5
	Max Mx	STR 1/ 1	0.0	10.2	10.2
	Max My	STR 1/ 192	0.0	3.4	3.4
Load No.	Max Mz	STR 1/ 7	11.0	9.3	14.4
19	Max Mxy	STR 1/ 20	0.0	12.5	12.5
	Max Mxz	STR 1/ 7	11.0	9.3	14.4
Member	Max Myz	STR 1/ 25	11.0	11.3	15.8
729	Min Fx	STR 1/ 47	0.0	12.2	12.2
	Min Fy	STR 1/ 1	0.0	10.2	10.2
Joint	Min Fz	STR 1/ 192	0.0	3.4	3.4
719	Min Mx	STR 1/ 7	11.0	9.3	14.4
	Min My	STR 1/ 20	0.0	12.5	12.5
	Min Mz	STR 1/ 1	0.0	10.2	10.2
	Min Mxy	STR 1/ 192	0.0	3.4	3.4
	Min Mxz	STR 1/ 1	0.0	10.2	10.2
	Min Myz	STR 1/ 192	0.0	3.4	3.4
	Max Fx	STR 1/ 47	0.0	-5.7	5.7
	Max Fy	STR 1/ 1	0.0	-3.7	3.7
	Max Fz	STR 1/ 192	0.0	1.3	1.3
	Max Mx	STR 1/ 7	-11.0	-2.8	11.4
	Max My	STR 1/ 192	0.0	1.3	1.3
Load No.	Max Mz	STR 1/ 61	-11.0	-0.2	11.0
20	Max Mxy	STR 1/ 26	-10.5	-4.9	11.6
	Max Mxz	STR 1/ 61	-11.0	-0.2	11.0
Member	Max Myz	STR 1/ 25	-11.0	-4.8	12.0
729	Min Fx	STR 1/ 165	0.0	1.0	1.0
	Min Fy	STR 1/ 7	-11.0	-2.8	11.4
Joint	Min Fz	STR 1/ 20	0.0	-6.0	6.0
720	Min Mx	STR 1/ 1	0.0	-3.7	3.7
	Min My	STR 1/ 20	0.0	-6.0	6.0
	Min Mz	STR 1/ 1	0.0	-3.7	3.7
	Min Mxy	STR 1/ 75	0.0	-1.1	1.1
	Min Mxz	STR 1/ 55	0.0	-1.1	1.1
	Min Myz	STR 1/ 75	0.0	-1.1	1.1

Shear in Diagonals

Main Span
Member End Forces (Local)
STRI

$V = \sqrt{(Fy^2 + Fz^2)}$

	Max/ Min ID	Combo ID	Fy (kips)	Fz (kips)	$V_{resultant}$ (kips)
	Max Fx	STR 1/ 20	0.0	11.3	11.3
	Max Fy	STR 1/ 7	0.4	9.5	9.5
	Max Fz	STR 1/ 19	0.0	11.3	11.3
	Max Mx	STR 1/ 7	0.4	9.5	9.5
	Max My	STR 1/ 83	0.0	5.7	5.7
Load No.	Max Mz	STR 1/ 8	0.4	9.5	9.5
21	Max Mxy	STR 1/ 23	0.0	11.1	11.1
	Max Mxz	STR 1/ 8	0.4	9.5	9.5
Member	Max Myz	STR 1/ 23	0.0	11.1	11.1
732	Min Fx	STR 1/ 192	0.0	5.4	5.4
	Min Fy	STR 1/ 1	0.0	9.6	9.6
Joint	Min Fz	STR 1/ 84	0.0	5.4	5.4
721	Min Mx	STR 1/ 1	0.0	9.6	9.6
	Min My	STR 1/ 23	0.0	11.1	11.1
	Min Mz	STR 1/ 9	0.0	9.3	9.3
	Min Mxy	STR 1/ 83	0.0	5.7	5.7
	Min Mxz	STR 1/ 1	0.0	9.6	9.6
	Min Myz	STR 1/ 83	0.0	5.7	5.7
	Max Fx	STR 1/ 192	0.0	3.7	3.7
	Max Fy	STR 1/ 1	0.0	3.0	3.0
	Max Fz	STR 1/ 84	0.0	3.7	3.7
	Max Mx	STR 1/ 1	0.0	3.0	3.0
	Max My	STR 1/ 192	0.0	3.7	3.7
Load No.	Max Mz	STR 1/ 9	0.0	3.4	3.4
22	Max Mxy	STR 1/ 20	0.0	1.4	1.4
	Max Mxz	STR 1/ 8	-0.4	3.2	3.2
Member	Max Myz	STR 1/ 20	0.0	1.4	1.4
732	Min Fx	STR 1/ 20	0.0	1.4	1.4
	Min Fy	STR 1/ 7	-0.4	3.2	3.2
Joint	Min Fz	STR 1/ 19	0.0	1.4	1.4
722	Min Mx	STR 1/ 7	-0.4	3.2	3.2
	Min My	STR 1/ 20	0.0	1.4	1.4
	Min Mz	STR 1/ 8	-0.4	3.2	3.2
	Min Mxy	STR 1/ 192	0.0	3.7	3.7
	Min Mxz	STR 1/ 1	0.0	3.0	3.0
	Min Myz	STR 1/ 192	0.0	3.7	3.7

Max South Vertical	**96.4**	**kips**
Max Diagonal	**35.1**	**kips**

Shear in Diagonals

Main Span
Member End Forces (Local)
STRIII

$V = \sqrt{Fy^2 + Fz^2}$

	Max/ Min ID	Combo ID	Fy (kips)	Fz (kips)	$V_{resultant}$ (kips)
	Max Fx	STR 3/ 31	43.8	-96.0	105.5
	Max Fy	STR 3/ 3	67.6	-88.0	111.0
	Max Fz	STR 3/ 7	67.6	-54.4	86.8
	Max Mx	STR 3/ 1	43.8	-71.2	83.6
	Max My	STR 3/ 33	67.6	-112.8	131.5
Load No.	Max Mz	STR 3/ 123	67.6	-88.4	111.3
1	Max Mxy	STR 3/ 33	67.6	-112.8	131.5
	Max Mxz	STR 3/ 4	-125.4	-69.6	143.4
Member	Max Myz	STR 3/ 38	-125.4	-97.5	158.8
702	Min Fx	STR 3/ 121	43.8	-71.6	83.9
	Min Fy	STR 3/ 4	-125.4	-69.6	143.4
Joint	Min Fz	STR 3/ 153	67.6	-113.2	131.8
701	Min Mx	STR 3/ 121	43.8	-71.6	83.9
	Min My	STR 3/ 127	67.6	-54.8	87.0
	Min Mz	STR 3/ 4	-125.4	-69.6	143.4
	Min Mxy	STR 3/ 127	67.6	-54.8	87.0
	Min Mxz	STR 3/ 2	7.7	-70.6	71.0
	Min Myz	STR 3/ 122	7.7	-71.1	71.5
	Max Fx	STR 3/ 121	-46.1	71.6	85.2
	Max Fy	STR 3/ 4	124.0	70.7	142.7
	Max Fz	STR 3/ 153	-69.4	113.9	133.4
	Max Mx	STR 3/ 121	-46.1	71.6	85.2
	Max My	STR 3/ 153	-69.4	113.9	133.4
Load No.	Max Mz	STR 3/ 124	124.0	71.2	143.0
2	Max Mxy	STR 3/ 153	-69.4	113.9	133.4
	Max Mxz	STR 3/ 3	-69.4	88.7	112.6
Member	Max Myz	STR 3/ 153	-69.4	113.9	133.4
702	Min Fx	STR 3/ 31	-46.1	96.0	106.5
	Min Fy	STR 3/ 3	-69.4	88.7	112.6
Joint	Min Fz	STR 3/ 7	-69.4	53.7	87.7
702	Min Mx	STR 3/ 1	-46.1	71.2	84.8
	Min My	STR 3/ 7	-69.4	53.7	87.7
	Min Mz	STR 3/ 3	-69.4	88.7	112.6
	Min Mxy	STR 3/ 7	-69.4	53.7	87.7
	Min Mxz	STR 3/ 122	-9.7	71.4	72.1
	Min Myz	STR 3/ 5	62.0	64.7	89.6

Shear in Diagonals

Main Span

Member End Forces (Local)

STRIII

$V = \sqrt{(Fy^2 + Fz^2)}$

	Max/ Min ID	Combo ID	Fy (kips)	Fz (kips)	$V_{resultant}$ (kips)
	Max Fx	STR 3/ 59	-2.9	3.6	4.6
	Max Fy	STR 3/ 5	-2.9	2.5	3.8
	Max Fz	STR 3/ 109	-2.9	4.2	5.1
	Max Mx	STR 3/ 130	-10.9	-0.3	10.9
	Max My	STR 3/ 25	-2.9	2.6	3.9
Load No.	Max Mz	STR 3/ 5	-2.9	2.5	3.8
3	Max Mxy	STR 3/ 30	-10.9	0.0	10.9
	Max Mxz	STR 3/ 130	-10.9	-0.3	10.9
Member	Max Myz	STR 3/ 30	-10.9	0.0	10.9
705	Min Fx	STR 3/ 190	-10.9	0.2	10.9
	Min Fy	STR 3/ 10	-10.9	0.0	10.9
Joint	Min Fz	STR 3/ 130	-10.9	-0.3	10.9
703	Min Mx	STR 3/ 5	-2.9	2.5	3.8
	Min My	STR 3/ 220	-10.9	0.4	10.9
	Min Mz	STR 3/ 130	-10.9	-0.3	10.9
	Min Mxy	STR 3/ 219	-2.9	3.7	4.7
	Min Mxz	STR 3/ 5	-2.9	2.5	3.8
	Min Myz	STR 3/ 219	-2.9	3.7	4.7
	Max Fx	STR 3/ 190	6.0	18.6	19.5
	Max Fy	STR 3/ 10	6.0	26.1	26.8
	Max Fz	STR 3/ 10	6.0	26.1	26.8
	Max Mx	STR 3/ 5	1.4	24.9	24.9
	Max My	STR 3/ 190	6.0	18.6	19.5
Load No.	Max Mz	STR 3/ 5	1.4	24.9	24.9
4	Max Mxy	STR 3/ 190	6.0	18.6	19.5
	Max Mxz	STR 3/ 130	6.0	19.1	20.0
Member	Max Myz	STR 3/ 190	6.0	18.6	19.5
705	Min Fx	STR 3/ 59	1.4	21.3	21.3
	Min Fy	STR 3/ 5	1.4	24.9	24.9
Joint	Min Fz	STR 3/ 229	1.4	13.6	13.7
704	Min Mx	STR 3/ 130	6.0	19.1	20.0
	Min My	STR 3/ 59	1.4	21.3	21.3
	Min Mz	STR 3/ 10	6.0	26.1	26.8
	Min Mxy	STR 3/ 55	1.4	24.6	24.6
	Min Mxz	STR 3/ 5	1.4	24.9	24.9
	Min Myz	STR 3/ 55	1.4	24.6	24.6

Shear in Diagonals

Main Span
Member End Forces (Local)
STRIII

$V = \sqrt{(Fy^2 + Fz^2)}$

	Max/ Min ID	Combo ID	Fy (kips)	Fz (kips)	$V_{resultant}$ (kips)
	Max Fx	STR 3/ 190	-23.5	-13.5	27.1
	Max Fy	STR 3/ 5	-7.8	-17.2	18.9
	Max Fz	STR 3/ 184	-13.4	-7.6	15.4
	Max Mx	STR 3/ 10	-23.5	-23.0	32.9
	Max My	STR 3/ 60	-23.5	-32.7	40.3
Load No.	Max Mz	STR 3/ 9	-7.8	-18.0	19.6
5	Max Mxy	STR 3/ 60	-23.5	-32.7	40.3
	Max Mxz	STR 3/ 130	-23.5	-13.9	27.3
Member	Max Myz	STR 3/ 60	-23.5	-32.7	40.3
708	Min Fx	STR 3/ 59	-7.8	-27.7	28.8
	Min Fy	STR 3/ 10	-23.5	-23.0	32.9
Joint	Min Fz	STR 3/ 60	-23.5	-32.7	40.3
705	Min Mx	STR 3/ 5	-7.8	-17.2	18.9
	Min My	STR 3/ 185	-7.8	-7.6	10.9
	Min Mz	STR 3/ 130	-23.5	-13.9	27.3
	Min Mxy	STR 3/ 185	-7.8	-7.6	10.9
	Min Mxz	STR 3/ 9	-7.8	-18.0	19.6
	Min Myz	STR 3/ 185	-7.8	-7.6	10.9
	Max Fx	STR 3/ 59	7.3	28.7	29.6
	Max Fy	STR 3/ 10	21.7	25.2	33.3
	Max Fz	STR 3/ 60	21.7	34.9	41.1
	Max Mx	STR 3/ 5	7.3	20.4	21.7
	Max My	STR 3/ 60	21.7	34.9	41.1
Load No.	Max Mz	STR 3/ 10	21.7	25.2	33.3
6	Max Mxy	STR 3/ 60	21.7	34.9	41.1
	Max Mxz	STR 3/ 10	21.7	25.2	33.3
Member	Max Myz	STR 3/ 60	21.7	34.9	41.1
708	Min Fx	STR 3/ 190	21.7	15.0	26.4
	Min Fy	STR 3/ 5	7.3	20.4	21.7
Joint	Min Fz	STR 3/ 189	7.3	8.8	11.4
706	Min Mx	STR 3/ 10	21.7	25.2	33.3
	Min My	STR 3/ 189	7.3	8.8	11.4
	Min Mz	STR 3/ 5	7.3	20.4	21.7
	Min Mxy	STR 3/ 189	7.3	8.8	11.4
	Min Mxz	STR 3/ 5	7.3	20.4	21.7
	Min Myz	STR 3/ 189	7.3	8.8	11.4

Shear in Diagonals

Main Span

Member End Forces (Local)

STRIII

$V = \sqrt{(Fy^2 + Fz^2)}$

	Max/ Min ID	Combo ID	Fy (kips)	Fz (kips)	$V_{resultant}$ (kips)
	Max Fx	STR 3/ 59	-1.5	3.6	3.9
	Max Fy	STR 3/ 5	-1.5	5.2	5.4
	Max Fz	STR 3/ 65	-1.5	5.3	5.5
	Max Mx	STR 3/ 10	-4.9	5.1	7.1
	Max My	STR 3/ 59	-1.5	3.6	3.9
Load No.	Max Mz	STR 3/ 5	-1.5	5.2	5.4
7	Max Mxy	STR 3/ 51	-4.3	4.1	5.9
	Max Mxz	STR 3/ 130	-4.9	3.8	6.2
Member	Max Myz	STR 3/ 51	-4.3	4.1	5.9
711	Min Fx	STR 3/ 185	-1.5	4.0	4.3
	Min Fy	STR 3/ 10	-4.9	5.1	7.1
Joint	Min Fz	STR 3/ 179	-1.5	2.3	2.7
707	Min Mx	STR 3/ 5	-1.5	5.2	5.4
	Min My	STR 3/ 190	-4.9	3.9	6.3
	Min Mz	STR 3/ 130	-4.9	3.8	6.2
	Min Mxy	STR 3/ 185	-1.5	4.0	4.3
	Min Mxz	STR 3/ 5	-1.5	5.2	5.4
	Min Myz	STR 3/ 185	-1.5	4.0	4.3
	Max Fx	STR 3/ 185	0.1	8.6	8.6
	Max Fy	STR 3/ 10	0.4	10.5	10.5
	Max Fz	STR 3/ 55	0.1	12.3	12.3
	Max Mx	STR 3/ 5	0.1	11.8	11.8
	Max My	STR 3/ 65	0.1	11.7	11.7
Load No.	Max Mz	STR 3/ 5	0.1	11.8	11.8
8	Max Mxy	STR 3/ 70	0.4	10.4	10.4
	Max Mxz	STR 3/ 10	0.4	10.5	10.5
Member	Max Myz	STR 3/ 65	0.1	11.7	11.7
711	Min Fx	STR 3/ 59	0.1	10.7	10.7
	Min Fy	STR 3/ 1	-0.1	11.0	11.0
Joint	Min Fz	STR 3/ 189	0.1	6.9	6.9
708	Min Mx	STR 3/ 10	0.4	10.5	10.5
	Min My	STR 3/ 159	0.1	7.3	7.3
	Min Mz	STR 3/ 10	0.4	10.5	10.5
	Min Mxy	STR 3/ 159	0.1	7.3	7.3
	Min Mxz	STR 3/ 5	0.1	11.8	11.8
	Min Myz	STR 3/ 159	0.1	7.3	7.3

Shear in Diagonals

Main Span

Member End Forces (Local)

STRIII

$V = \sqrt{Fy^2 + Fz^2}$

	Max/ Min ID	Combo ID	Fy (kips)	Fz (kips)	$V_{resultant}$ (kips)
	Max Fx	STR 3/ 215	-3.1	13.5	13.9
	Max Fy	STR 3/ 10	-2.5	6.5	7.0
	Max Fz	STR 3/ 155	-3.1	13.5	13.9
	Max Mx	STR 3/ 10	-2.5	6.5	7.0
	Max My	STR 3/ 89	-3.1	2.1	3.7
Load No.	Max Mz	STR 3/ 9	-3.1	4.1	5.1
9	Max Mxy	STR 3/ 155	-3.1	13.5	13.9
	Max Mxz	STR 3/ 1	-8.7	5.6	10.3
Member	Max Myz	STR 3/ 151	-8.7	12.0	14.8
714	Min Fx	STR 3/ 19	-3.1	2.6	4.0
	Min Fy	STR 3/ 1	-8.7	5.6	10.3
Joint	Min Fz	STR 3/ 29	-3.1	2.1	3.7
709	Min Mx	STR 3/ 5	-3.1	7.2	7.8
	Min My	STR 3/ 155	-3.1	13.5	13.9
	Min Mz	STR 3/ 1	-8.7	5.6	10.3
	Min Mxy	STR 3/ 89	-3.1	2.1	3.7
	Min Mxz	STR 3/ 9	-3.1	4.1	5.1
	Min Myz	STR 3/ 89	-3.1	2.1	3.7
	Max Fx	STR 3/ 19	2.5	-3.9	4.6
	Max Fy	STR 3/ 1	6.7	-5.5	8.7
	Max Fz	STR 3/ 27	5.3	-3.4	6.3
	Max Mx	STR 3/ 5	2.5	-5.6	6.1
	Max My	STR 3/ 29	2.5	-3.4	4.2
Load No.	Max Mz	STR 3/ 10	0.6	-6.3	6.3
10	Max Mxy	STR 3/ 160	0.6	-12.7	12.7
	Max Mxz	STR 3/ 10	0.6	-6.3	6.3
Member	Max Myz	STR 3/ 160	0.6	-12.7	12.7
714	Min Fx	STR 3/ 215	2.5	-12.0	12.3
	Min Fy	STR 3/ 10	0.6	-6.3	6.3
Joint	Min Fz	STR 3/ 160	0.6	-12.7	12.7
710	Min Mx	STR 3/ 10	0.6	-6.3	6.3
	Min My	STR 3/ 160	0.6	-12.7	12.7
	Min Mz	STR 3/ 5	2.5	-5.6	6.1
	Min Mxy	STR 3/ 29	2.5	-3.4	4.2
	Min Mxz	STR 3/ 5	2.5	-5.6	6.1
	Min Myz	STR 3/ 29	2.5	-3.4	4.2

Shear in Diagonals

Main Span

Member End Forces (Local)

STRIII

$V = \sqrt{(Fy^2 + Fz^2)}$

	Max/ Min ID	Combo ID	Fy (kips)	Fz (kips)	$V_{resultant}$ (kips)
	Max Fx	STR 3/ 79	-1.1	2.9	3.1
	Max Fy	STR 3/ 5	-1.1	4.0	4.1
	Max Fz	STR 3/ 65	-1.1	4.1	4.2
	Max Mx	STR 3/ 1	-3.4	3.5	4.9
	Max My	STR 3/ 59	-1.1	2.8	3.0
Load No.	Max Mz	STR 3/ 5	-1.1	4.0	4.1
11	Max Mxy	STR 3/ 56	-3.2	3.2	4.5
	Max Mxz	STR 3/ 1	-3.4	3.5	4.9
Member	Max Myz	STR 3/ 51	-3.4	3.4	4.8
717	Min Fx	STR 3/ 155	-1.1	2.8	3.0
	Min Fy	STR 3/ 1	-3.4	3.5	4.9
Joint	Min Fz	STR 3/ 139	-1.1	1.6	1.9
711	Min Mx	STR 3/ 5	-1.1	4.0	4.1
	Min My	STR 3/ 185	-1.1	2.9	3.1
	Min Mz	STR 3/ 1	-3.4	3.5	4.9
	Min Mxy	STR 3/ 185	-1.1	2.9	3.1
	Min Mxz	STR 3/ 5	-1.1	4.0	4.1
	Min Myz	STR 3/ 185	-1.1	2.9	3.1
	Max Fx	STR 3/ 155	-0.1	8.3	8.3
	Max Fy	STR 3/ 5	-0.1	10.9	10.9
	Max Fz	STR 3/ 15	-0.1	11.0	11.0
	Max Mx	STR 3/ 5	-0.1	10.9	10.9
	Max My	STR 3/ 65	-0.1	10.8	10.8
Load No.	Max Mz	STR 3/ 9	-0.1	9.2	9.2
12	Max Mxy	STR 3/ 62	-0.6	10.1	10.1
	Max Mxz	STR 3/ 1	-0.6	10.0	10.0
Member	Max Myz	STR 3/ 65	-0.1	10.8	10.8
717	Min Fx	STR 3/ 79	-0.1	9.2	9.2
	Min Fy	STR 3/ 10	-1.1	10.0	10.1
Joint	Min Fz	STR 3/ 189	-0.1	6.5	6.5
712	Min Mx	STR 3/ 1	-0.6	10.0	10.0
	Min My	STR 3/ 179	-0.1	6.7	6.7
	Min Mz	STR 3/ 10	-1.1	10.0	10.1
	Min Mxy	STR 3/ 179	-0.1	6.7	6.7
	Min Mxz	STR 3/ 9	-0.1	9.2	9.2
	Min Myz	STR 3/ 179	-0.1	6.7	6.7

Shear in Diagonals

Main Span

Member End Forces (Local)

STRIII

$V = \sqrt{(Fy^2 + Fz^2)}$

	Max/ Min ID	Combo ID	Fy (kips)	Fz (kips)	$V_{resultant}$ (kips)
	Max Fx	STR 3/ 55	1.3	-26.7	26.7
	Max Fy	STR 3/ 1	3.6	-25.0	25.3
	Max Fz	STR 3/ 190	-5.0	-20.4	21.0
	Max Mx	STR 3/ 10	-5.0	-23.4	23.9
	Max My	STR 3/ 55	1.3	-26.7	26.7
Load No.	Max Mz	STR 3/ 1	3.6	-25.0	25.3
13	Max Mxy	STR 3/ 55	1.3	-26.7	26.7
	Max Mxz	STR 3/ 1	3.6	-25.0	25.3
Member	Max Myz	STR 3/ 51	3.6	-26.0	26.2
720	Min Fx	STR 3/ 189	1.3	-21.2	21.2
	Min Fy	STR 3/ 10	-5.0	-23.4	23.9
Joint	Min Fz	STR 3/ 55	1.3	-26.7	26.7
713	Min Mx	STR 3/ 1	3.6	-25.0	25.3
	Min My	STR 3/ 190	-5.0	-20.4	21.0
	Min Mz	STR 3/ 10	-5.0	-23.4	23.9
	Min Mxy	STR 3/ 190	-5.0	-20.4	21.0
	Min Mxz	STR 3/ 10	-5.0	-23.4	23.9
	Min Myz	STR 3/ 190	-5.0	-20.4	21.0
	Max Fx	STR 3/ 189	-0.6	24.9	24.9
	Max Fy	STR 3/ 10	7.3	26.6	27.6
	Max Fz	STR 3/ 59	-0.6	29.9	29.9
	Max Mx	STR 3/ 1	-1.4	28.1	28.1
	Max My	STR 3/ 59	-0.6	29.9	29.9
Load No.	Max Mz	STR 3/ 5	-0.6	27.4	27.4
14	Max Mxy	STR 3/ 59	-0.6	29.9	29.9
	Max Mxz	STR 3/ 10	7.3	26.6	27.6
Member	Max Myz	STR 3/ 60	7.3	27.6	28.5
720	Min Fx	STR 3/ 55	-0.6	28.5	28.5
	Min Fy	STR 3/ 1	-1.4	28.1	28.1
Joint	Min Fz	STR 3/ 190	7.3	22.6	23.7
714	Min Mx	STR 3/ 10	7.3	26.6	27.6
	Min My	STR 3/ 200	7.3	22.6	23.7
	Min Mz	STR 3/ 10	7.3	26.6	27.6
	Min Mxy	STR 3/ 200	7.3	22.6	23.7
	Min Mxz	STR 3/ 5	-0.6	27.4	27.4
	Min Myz	STR 3/ 195	-0.6	23.5	23.5

Shear in Diagonals

Main Span

Member End Forces (Local)

STRIII

$V = \sqrt{Fy^2 + Fz^2}$

	Max/ Min ID	Combo ID	Fy (kips)	Fz (kips)	$V_{resultant}$ (kips)
	Max Fx	STR 3/ 190	-0.1	-0.5	0.5
	Max Fy	STR 3/ 10	-0.1	-0.2	0.2
	Max Fz	STR 3/ 94	-1.7	0.5	1.8
	Max Mx	STR 3/ 1	-2.7	-0.4	2.7
	Max My	STR 3/ 19	-1.0	-1.0	1.4
Load No.	Max Mz	STR 3/ 10	-0.1	-0.2	0.2
15	Max Mxy	STR 3/ 11	-2.7	-0.6	2.8
	Max Mxz	STR 3/ 1	-2.7	-0.4	2.7
Member	Max Myz	STR 3/ 11	-2.7	-0.6	2.8
723	Min Fx	STR 3/ 55	-1.0	0.2	1.0
	Min Fy	STR 3/ 1	-2.7	-0.4	2.7
Joint	Min Fz	STR 3/ 138	-1.7	-1.4	2.2
715	Min Mx	STR 3/ 10	-0.1	-0.2	0.2
	Min My	STR 3/ 220	-0.1	-0.2	0.2
	Min Mz	STR 3/ 1	-2.7	-0.4	2.7
	Min Mxy	STR 3/ 220	-0.1	-0.2	0.2
	Min Mxz	STR 3/ 5	-1.0	0.1	1.0
	Min Myz	STR 3/ 215	-1.0	0.0	1.0
	Max Fx	STR 3/ 55	-0.1	11.7	11.7
	Max Fy	STR 3/ 5	-0.1	11.8	11.8
	Max Fz	STR 3/ 15	-0.1	12.0	12.0
	Max Mx	STR 3/ 10	-3.2	10.7	11.2
	Max My	STR 3/ 25	-0.1	12.0	12.0
Load No.	Max Mz	STR 3/ 10	-3.2	10.7	11.2
16	Max Mxy	STR 3/ 25	-0.1	12.0	12.0
	Max Mxz	STR 3/ 1	-0.7	10.9	10.9
Member	Max Myz	STR 3/ 25	-0.1	12.0	12.0
723	Min Fx	STR 3/ 190	-3.2	8.1	8.7
	Min Fy	STR 3/ 10	-3.2	10.7	11.2
Joint	Min Fz	STR 3/ 219	-0.1	7.0	7.0
716	Min Mx	STR 3/ 1	-0.7	10.9	10.9
	Min My	STR 3/ 219	-0.1	7.0	7.0
	Min Mz	STR 3/ 1	-0.7	10.9	10.9
	Min Mxy	STR 3/ 219	-0.1	7.0	7.0
	Min Mxz	STR 3/ 5	-0.1	11.8	11.8
	Min Myz	STR 3/ 219	-0.1	7.0	7.0

Shear in Diagonals

Main Span

Member End Forces (Local)

STRIII

$V = \sqrt{Fy^2 + Fz^2}$

	Max/ Min ID	Combo ID	Fy (kips)	Fz (kips)	$V_{resultant}$ (kips)
	Max Fx	STR 3/ 55	0.8	-16.6	16.6
	Max Fy	STR 3/ 1	2.2	-14.4	14.6
	Max Fz	STR 3/ 189	0.8	-10.5	10.5
	Max Mx	STR 3/ 5	0.8	-15.5	15.5
	Max My	STR 3/ 25	0.8	-16.6	16.6
Load No.	Max Mz	STR 3/ 1	2.2	-14.4	14.6
17	Max Mxy	STR 3/ 25	0.8	-16.6	16.6
	Max Mxz	STR 3/ 1	2.2	-14.4	14.6
Member	Max Myz	STR 3/ 24	1.5	-16.3	16.4
726	Min Fx	STR 3/ 190	-2.7	-10.6	10.9
	Min Fy	STR 3/ 10	-2.7	-13.4	13.7
Joint	Min Fz	STR 3/ 25	0.8	-16.6	16.6
717	Min Mx	STR 3/ 1	2.2	-14.4	14.6
	Min My	STR 3/ 220	-2.7	-10.6	10.9
	Min Mz	STR 3/ 10	-2.7	-13.4	13.7
	Min Mxy	STR 3/ 220	-2.7	-10.6	10.9
	Min Mxz	STR 3/ 10	-2.7	-13.4	13.7
	Min Myz	STR 3/ 220	-2.7	-10.6	10.9
	Max Fx	STR 3/ 190	5.5	15.9	16.8
	Max Fy	STR 3/ 10	5.5	20.8	21.5
	Max Fz	STR 3/ 28	0.3	23.2	23.2
	Max Mx	STR 3/ 1	0.6	21.8	21.8
	Max My	STR 3/ 59	0.0	23.2	23.2
Load No.	Max Mz	STR 3/ 5	0.0	21.5	21.5
18	Max Mxy	STR 3/ 56	0.6	22.9	22.9
	Max Mxz	STR 3/ 10	5.5	20.8	21.5
Member	Max Myz	STR 3/ 60	5.5	21.9	22.6
726	Min Fx	STR 3/ 55	0.0	22.6	22.6
	Min Fy	STR 3/ 5	0.0	21.5	21.5
Joint	Min Fz	STR 3/ 190	5.5	15.9	16.8
718	Min Mx	STR 3/ 5	0.0	21.5	21.5
	Min My	STR 3/ 190	5.5	15.9	16.8
	Min Mz	STR 3/ 10	5.5	20.8	21.5
	Min Mxy	STR 3/ 190	5.5	15.9	16.8
	Min Mxz	STR 3/ 5	0.0	21.5	21.5
	Min Myz	STR 3/ 185	0.0	16.6	16.6

Shear in Diagonals

Main Span

Member End Forces (Local)

STRIII

$V = \sqrt{(Fy^2 + Fz^2)}$

	Max/ Min ID	Combo ID	Fy (kips)	Fz (kips)	$V_{resultant}$ (kips)
	Max Fx	STR 3/ 190	4.1	3.3	5.3
	Max Fy	STR 3/ 10	4.1	7.9	8.9
	Max Fz	STR 3/ 25	-0.7	11.8	11.8
	Max Mx	STR 3/ 1	-1.7	8.6	8.8
	Max My	STR 3/ 219	-0.7	2.5	2.6
Load No.	Max Mz	STR 3/ 10	4.1	7.9	8.9
19	Max Mxy	STR 3/ 25	-0.7	11.8	11.8
	Max Mxz	STR 3/ 10	4.1	7.9	8.9
Member	Max Myz	STR 3/ 25	-0.7	11.8	11.8
729	Min Fx	STR 3/ 55	-0.7	11.5	11.5
	Min Fy	STR 3/ 1	-1.7	8.6	8.8
Joint	Min Fz	STR 3/ 219	-0.7	2.5	2.6
719	Min Mx	STR 3/ 5	-0.7	9.9	9.9
	Min My	STR 3/ 25	-0.7	11.8	11.8
	Min Mz	STR 3/ 1	-1.7	8.6	8.8
	Min Mxy	STR 3/ 219	-0.7	2.5	2.6
	Min Mxz	STR 3/ 5	-0.7	9.9	9.9
	Min Myz	STR 3/ 219	-0.7	2.5	2.6
	Max Fx	STR 3/ 55	-0.1	-3.6	3.6
	Max Fy	STR 3/ 5	-0.1	-2.0	2.0
	Max Fz	STR 3/ 220	-6.9	1.7	7.1
	Max Mx	STR 3/ 5	-0.1	-2.0	2.0
	Max My	STR 3/ 220	-6.9	1.7	7.1
Load No.	Max Mz	STR 3/ 130	-6.9	1.2	7.0
20	Max Mxy	STR 3/ 21	-1.0	-4.1	4.2
	Max Mxz	STR 3/ 130	-6.9	1.2	7.0
Member	Max Myz	STR 3/ 30	-6.9	-3.4	7.7
729	Min Fx	STR 3/ 190	-6.9	1.4	7.0
	Min Fy	STR 3/ 10	-6.9	-1.4	7.0
Joint	Min Fz	STR 3/ 29	-0.1	-4.2	4.2
720	Min Mx	STR 3/ 1	-1.0	-2.1	2.3
	Min My	STR 3/ 26	-0.8	-4.1	4.2
	Min Mz	STR 3/ 5	-0.1	-2.0	2.0
	Min Mxy	STR 3/ 179	-0.1	-1.3	1.3
	Min Mxz	STR 3/ 5	-0.1	-2.0	2.0
	Min Myz	STR 3/ 179	-0.1	-1.3	1.3

Shear in Diagonals

Main Span
Member End Forces (Local)
STRIII

$V = \sqrt{(Fy^2 + Fz^2)}$

	Max/ Min ID	Combo ID	Fy (kips)	Fz (kips)	$V_{resultant}$ (kips)
	Max Fx	STR 3/ 25	1.0	11.8	11.8
	Max Fy	STR 3/ 1	2.8	9.3	9.7
	Max Fz	STR 3/ 25	1.0	11.8	11.8
	Max Mx	STR 3/ 5	1.0	10.1	10.1
	Max My	STR 3/ 159	1.0	4.5	4.6
Load No.	Max Mz	STR 3/ 10	2.2	9.1	9.4
21	Max Mxy	STR 3/ 25	1.0	11.8	11.8
	Max Mxz	STR 3/ 10	2.2	9.1	9.4
Member	Max Myz	STR 3/ 25	1.0	11.8	11.8
732	Min Fx	STR 3/ 220	2.2	5.2	5.6
	Min Fy	STR 3/ 5	1.0	10.1	10.1
Joint	Min Fz	STR 3/ 159	1.0	4.5	4.6
721	Min Mx	STR 3/ 10	2.2	9.1	9.4
	Min My	STR 3/ 25	1.0	11.8	11.8
	Min Mz	STR 3/ 5	1.0	10.1	10.1
	Min Mxy	STR 3/ 169	1.0	5.9	6.0
	Min Mxz	STR 3/ 5	1.0	10.1	10.1
	Min Myz	STR 3/ 169	1.0	5.9	6.0
	Max Fx	STR 3/ 220	1.5	3.9	4.2
	Max Fy	STR 3/ 10	1.5	3.5	3.8
	Max Fz	STR 3/ 159	0.3	5.8	5.8
	Max Mx	STR 3/ 10	1.5	3.5	3.8
	Max My	STR 3/ 219	0.3	5.8	5.8
Load No.	Max Mz	STR 3/ 5	0.3	1.3	1.3
22	Max Mxy	STR 3/ 25	0.3	-0.4	0.5
	Max Mxz	STR 3/ 10	1.5	3.5	3.8
Member	Max Myz	STR 3/ 25	0.3	-0.4	0.5
732	Min Fx	STR 3/ 25	0.3	-0.4	0.5
	Min Fy	STR 3/ 5	0.3	1.3	1.3
Joint	Min Fz	STR 3/ 25	0.3	-0.4	0.5
722	Min Mx	STR 3/ 5	0.3	1.3	1.3
	Min My	STR 3/ 25	0.3	-0.4	0.5
	Min Mz	STR 3/ 10	1.5	3.5	3.8
	Min Mxy	STR 3/ 159	0.3	5.8	5.8
	Min Mxz	STR 3/ 5	0.3	1.3	1.3
	Min Myz	STR 3/ 159	0.3	5.8	5.8

Max South Vertical	**158.8**	**kips**	
Max Diagonal	**41.1**	**kips**	**(Controls)**

Shear in Diagonals

Back Span
Member End Forces (Local)
STRI

$V = sqrt(Fy^2 + Fz^2)$

	Max/ Min ID	Combo ID	Fy (kips)	Fz (kips)	$V_{resultant}$ (kips)
	Max Fx	STR 1/ 21	0.0	4.8	4.8
	Max Fy	STR 1/ 1	0.0	3.0	3.0
	Max Fz	STR 1/ 130	0.0	6.0	6.0
	Max Mx	STR 1/ 1	0.0	3.0	3.0
	Max My	STR 1/ 82	0.0	0.9	0.9
Load No.	Max Mz	STR 1/ 8	0.0	4.1	4.1
1	Max Mxy	STR 1/ 82	0.0	0.9	0.9
	Max Mxz	STR 1/ 8	0.0	4.1	4.1
Member	Max Myz	STR 1/ 82	0.0	0.9	0.9
741	Min Fx	STR 1/ 191	0.0	2.0	2.0
	Min Fy	STR 1/ 7	-0.2	3.7	3.7
Joint	Min Fz	STR 1/ 82	0.0	0.9	0.9
727	Min Mx	STR 1/ 7	-0.2	3.7	3.7
	Min My	STR 1/ 132	0.0	6.0	6.0
	Min Mz	STR 1/ 9	-0.2	3.9	3.9
	Min Mxy	STR 1/ 132	0.0	6.0	6.0
	Min Mxz	STR 1/ 1	0.0	3.0	3.0
	Min Myz	STR 1/ 132	0.0	6.0	6.0
	Max Fx	STR 1/ 191	0.0	7.1	7.1
	Max Fy	STR 1/ 7	0.2	8.9	8.9
	Max Fz	STR 1/ 28	0.0	9.8	9.8
	Max Mx	STR 1/ 7	0.2	8.9	8.9
	Max My	STR 1/ 82	0.0	8.2	8.2
Load No.	Max Mz	STR 1/ 1	0.0	9.6	9.6
2	Max Mxy	STR 1/ 82	0.0	8.2	8.2
	Max Mxz	STR 1/ 7	0.2	8.9	8.9
Member	Max Myz	STR 1/ 82	0.0	8.2	8.2
741	Min Fx	STR 1/ 21	0.0	7.9	7.9
	Min Fy	STR 1/ 1	0.0	9.6	9.6
Joint	Min Fz	STR 1/ 184	0.0	5.0	5.0
728	Min Mx	STR 1/ 1	0.0	9.6	9.6
	Min My	STR 1/ 132	0.0	6.6	6.6
	Min Mz	STR 1/ 7	0.2	8.9	8.9
	Min Mxy	STR 1/ 159	0.0	6.8	6.8
	Min Mxz	STR 1/ 1	0.0	9.6	9.6
	Min Myz	STR 1/ 159	0.0	6.8	6.8

Shear in Diagonals

Back Span
Member End Forces (Local)
STRI

$V = \sqrt{Fy^2 + Fz^2}$

	Max/ Min ID	Combo ID	Fy (kips)	Fz (kips)	$V_{resultant}$ (kips)
	Max Fx	STR 1/ 167	0.0	1.9	1.9
	Max Fy	STR 1/ 1	0.0	0.5	0.5
	Max Fz	STR 1/ 131	0.0	4.9	4.9
	Max Mx	STR 1/ 7	-6.0	1.4	6.2
	Max My	STR 1/ 3	0.0	0.7	0.7
Load No.	Max Mz	STR 1/ 1	0.0	0.5	0.5
3	Max Mxy	STR 1/ 3	0.0	0.7	0.7
	Max Mxz	STR 1/ 7	-6.0	1.4	6.2
Member	Max Myz	STR 1/ 7	-6.0	1.4	6.2
744	Min Fx	STR 1/ 46	0.0	2.9	2.9
	Min Fy	STR 1/ 7	-6.0	1.4	6.2
Joint	Min Fz	STR 1/ 55	0.0	-0.1	0.1
729	Min Mx	STR 1/ 1	0.0	0.5	0.5
	Min My	STR 1/ 209	0.0	4.2	4.2
	Min Mz	STR 1/ 7	-6.0	1.4	6.2
	Min Mxy	STR 1/ 148	0.0	3.9	3.9
	Min Mxz	STR 1/ 1	0.0	0.5	0.5
	Min Myz	STR 1/ 148	0.0	3.9	3.9
	Max Fx	STR 1/ 46	0.0	3.1	3.1
	Max Fy	STR 1/ 7	6.0	4.6	7.6
	Max Fz	STR 1/ 1	0.0	5.5	5.5
	Max Mx	STR 1/ 1	0.0	5.5	5.5
	Max My	STR 1/ 82	0.0	4.4	4.4
Load No.	Max Mz	STR 1/ 1	0.0	5.5	5.5
4	Max Mxy	STR 1/ 135	4.7	2.0	5.1
	Max Mxz	STR 1/ 7	6.0	4.6	7.6
Member	Max Myz	STR 1/ 133	6.0	2.0	6.3
744	Min Fx	STR 1/ 167	0.0	2.4	2.4
	Min Fy	STR 1/ 1	0.0	5.5	5.5
Joint	Min Fz	STR 1/ 185	0.0	0.0	0.0
730	Min Mx	STR 1/ 7	6.0	4.6	7.6
	Min My	STR 1/ 131	0.0	1.1	1.1
	Min Mz	STR 1/ 7	6.0	4.6	7.6
	Min Mxy	STR 1/ 83	0.0	2.8	2.8
	Min Mxz	STR 1/ 1	0.0	5.5	5.5
	Min Myz	STR 1/ 83	0.0	2.8	2.8

Shear in Diagonals

Back Span
Member End Forces (Local)
STRI

$V = \sqrt{Fy^2 + Fz^2}$

	Max/ Min ID	Combo ID	Fy (kips)	Fz (kips)	$V_{resultant}$ (kips)
	Max Fx	STR 1/ 159	0.0	22.9	22.9
	Max Fy	STR 1/ 1	0.0	16.2	16.2
	Max Fz	STR 1/ 155	0.0	23.1	23.1
	Max Mx	STR 1/ 8	-1.2	16.9	16.9
	Max My	STR 1/ 57	0.0	13.8	13.8
Load No.	Max Mz	STR 1/ 1	0.0	16.2	16.2
5	Max Mxy	STR 1/ 157	0.0	22.9	22.9
	Max Mxz	STR 1/ 7	-9.6	16.4	19.0
Member	Max Myz	STR 1/ 160	-9.6	22.2	24.2
747	Min Fx	STR 1/ 57	0.0	13.8	13.8
	Min Fy	STR 1/ 7	-9.6	16.4	19.0
Joint	Min Fz	STR 1/ 57	0.0	13.8	13.8
731	Min Mx	STR 1/ 9	-8.4	16.0	18.1
	Min My	STR 1/ 157	0.0	22.9	22.9
	Min Mz	STR 1/ 7	-9.6	16.4	19.0
	Min Mxy	STR 1/ 57	0.0	13.8	13.8
	Min Mxz	STR 1/ 1	0.0	16.2	16.2
	Min Myz	STR 1/ 57	0.0	13.8	13.8
	Max Fx	STR 1/ 57	0.0	-13.6	13.6
	Max Fy	STR 1/ 7	9.6	-16.1	18.7
	Max Fz	STR 1/ 57	0.0	-13.6	13.6
	Max Mx	STR 1/ 9	8.4	-15.8	17.9
	Max My	STR 1/ 167	0.0	-14.9	14.9
Load No.	Max Mz	STR 1/ 9	8.4	-15.8	17.9
6	Max Mxy	STR 1/ 46	0.0	-21.7	21.7
	Max Mxz	STR 1/ 9	8.4	-15.8	17.9
Member	Max Myz	STR 1/ 46	0.0	-21.7	21.7
747	Min Fx	STR 1/ 159	0.0	-22.7	22.7
	Min Fy	STR 1/ 1	0.0	-16.0	16.0
Joint	Min Fz	STR 1/ 155	0.0	-22.8	22.8
732	Min Mx	STR 1/ 8	1.2	-16.7	16.7
	Min My	STR 1/ 46	0.0	-21.7	21.7
	Min Mz	STR 1/ 8	1.2	-16.7	16.7
	Min Mxy	STR 1/ 167	0.0	-14.9	14.9
	Min Mxz	STR 1/ 1	0.0	-16.0	16.0
	Min Myz	STR 1/ 167	0.0	-14.9	14.9

Shear in Diagonals

Back Span
Member End Forces (Local)
STRI

$V = \sqrt{Fy^2 + Fz^2}$

	Max/ Min ID	Combo ID	Fy (kips)	Fz (kips)	$V_{resultant}$ (kips)
	Max Fx	STR 1/ 171	-2.6	7.7	8.1
	Max Fy	STR 1/ 1	0.0	10.4	10.4
	Max Fz	STR 1/ 46	0.0	11.9	11.9
	Max Mx	STR 1/ 7	-3.5	9.7	10.3
	Max My	STR 1/ 168	0.0	7.5	7.5
Load No.	Max Mz	STR 1/ 1	0.0	10.4	10.4
7	Max Mxy	STR 1/ 46	0.0	11.9	11.9
	Max Mxz	STR 1/ 7	-3.5	9.7	10.3
Member	Max Myz	STR 1/ 52	-3.5	11.2	11.7
750	Min Fx	STR 1/ 46	0.0	11.9	11.9
	Min Fy	STR 1/ 7	-3.5	9.7	10.3
Joint	Min Fz	STR 1/ 166	0.0	7.5	7.5
733	Min Mx	STR 1/ 1	0.0	10.4	10.4
	Min My	STR 1/ 46	0.0	11.9	11.9
	Min Mz	STR 1/ 7	-3.5	9.7	10.3
	Min Mxy	STR 1/ 168	0.0	7.5	7.5
	Min Mxz	STR 1/ 1	0.0	10.4	10.4
	Min Myz	STR 1/ 168	0.0	7.5	7.5
	Max Fx	STR 1/ 46	0.0	-5.4	5.4
	Max Fy	STR 1/ 7	3.5	-3.2	4.7
	Max Fz	STR 1/ 112	0.0	-2.5	2.5
	Max Mx	STR 1/ 1	0.0	-3.9	3.9
	Max My	STR 1/ 167	0.0	-2.9	2.9
Load No.	Max Mz	STR 1/ 9	2.6	-2.9	3.9
8	Max Mxy	STR 1/ 46	0.0	-5.4	5.4
	Max Mxz	STR 1/ 7	3.5	-3.2	4.7
Member	Max Myz	STR 1/ 46	0.0	-5.4	5.4
750	Min Fx	STR 1/ 171	2.6	-3.0	4.0
	Min Fy	STR 1/ 1	0.0	-3.9	3.9
Joint	Min Fz	STR 1/ 100	0.0	-5.7	5.7
734	Min Mx	STR 1/ 7	3.5	-3.2	4.7
	Min My	STR 1/ 46	0.0	-5.4	5.4
	Min Mz	STR 1/ 8	0.7	-2.9	3.0
	Min Mxy	STR 1/ 167	0.0	-2.9	2.9
	Min Mxz	STR 1/ 1	0.0	-3.9	3.9
	Min Myz	STR 1/ 167	0.0	-2.9	2.9

Shear in Diagonals

Back Span
Member End Forces (Local)
STRI

$V = \sqrt{Fy^2 + Fz^2}$

	Max/ Min ID	Combo ID	Fy (kips)	Fz (kips)	$V_{resultant}$ (kips)
	Max Fx	STR 1/ 101	0.0	25.2	25.2
	Max Fy	STR 1/ 1	0.0	21.0	21.0
	Max Fz	STR 1/ 101	0.0	25.2	25.2
	Max Mx	STR 1/ 7	-8.4	19.3	21.0
	Max My	STR 1/ 171	-7.0	16.8	18.2
Load No.	Max Mz	STR 1/ 1	0.0	21.0	21.0
9	Max Mxy	STR 1/ 46	0.0	24.7	24.7
	Max Mxz	STR 1/ 7	-8.4	19.3	21.0
Member	Max Myz	STR 1/ 52	-8.4	22.9	24.4
753	Min Fx	STR 1/ 111	0.0	16.5	16.5
	Min Fy	STR 1/ 7	-8.4	19.3	21.0
Joint	Min Fz	STR 1/ 111	0.0	16.5	16.5
735	Min Mx	STR 1/ 1	0.0	21.0	21.0
	Min My	STR 1/ 46	0.0	24.7	24.7
	Min Mz	STR 1/ 7	-8.4	19.3	21.0
	Min Mxy	STR 1/ 171	-7.0	16.8	18.2
	Min Mxz	STR 1/ 1	0.0	21.0	21.0
	Min Myz	STR 1/ 168	0.0	17.2	17.2
	Max Fx	STR 1/ 111	0.0	-15.5	15.5
	Max Fy	STR 1/ 7	8.4	-18.3	20.1
	Max Fz	STR 1/ 111	0.0	-15.5	15.5
	Max Mx	STR 1/ 1	0.0	-20.0	20.0
	Max My	STR 1/ 111	0.0	-15.5	15.5
Load No.	Max Mz	STR 1/ 9	7.0	-16.2	17.6
10	Max Mxy	STR 1/ 101	0.0	-24.4	24.4
	Max Mxz	STR 1/ 7	8.4	-18.3	20.1
Member	Max Myz	STR 1/ 101	0.0	-24.4	24.4
753	Min Fx	STR 1/ 101	0.0	-24.4	24.4
	Min Fy	STR 1/ 1	0.0	-20.0	20.0
Joint	Min Fz	STR 1/ 101	0.0	-24.4	24.4
736	Min Mx	STR 1/ 7	8.4	-18.3	20.1
	Min My	STR 1/ 101	0.0	-24.4	24.4
	Min Mz	STR 1/ 8	1.2	-18.5	18.5
	Min Mxy	STR 1/ 111	0.0	-15.5	15.5
	Min Mxz	STR 1/ 1	0.0	-20.0	20.0
	Min Myz	STR 1/ 111	0.0	-15.5	15.5

Shear in Diagonals

Back Span
Member End Forces (Local)
STRI

$V = sqrt(Fy^2 + Fz^2)$

	Max/ Min ID	Combo ID	Fy (kips)	Fz (kips)	$V_{resultant}$ (kips)
	Max Fx	STR 1/ 120	0.0	3.9	3.9
	Max Fy	STR 1/ 1	0.0	5.9	5.9
	Max Fz	STR 1/ 29	0.0	7.3	7.3
	Max Mx	STR 1/ 7	-2.1	5.4	5.8
	Max My	STR 1/ 129	0.0	3.9	3.9
Load No.	Max Mz	STR 1/ 1	0.0	5.9	5.9
11	Max Mxy	STR 1/ 83	0.0	7.2	7.2
	Max Mxz	STR 1/ 7	-2.1	5.4	5.8
Member	Max Myz	STR 1/ 88	-2.1	5.8	6.2
756	Min Fx	STR 1/ 83	0.0	7.2	7.2
	Min Fy	STR 1/ 7	-2.1	5.4	5.8
Joint	Min Fz	STR 1/ 174	0.0	3.8	3.8
737	Min Mx	STR 1/ 1	0.0	5.9	5.9
	Min My	STR 1/ 83	0.0	7.2	7.2
	Min Mz	STR 1/ 7	-2.1	5.4	5.8
	Min Mxy	STR 1/ 157	0.0	5.5	5.5
	Min Mxz	STR 1/ 1	0.0	5.9	5.9
	Min Myz	STR 1/ 157	0.0	5.5	5.5
	Max Fx	STR 1/ 83	0.0	-2.1	2.1
	Max Fy	STR 1/ 7	2.1	1.6	2.6
	Max Fz	STR 1/ 120	0.0	3.1	3.1
	Max Mx	STR 1/ 1	0.0	1.1	1.1
	Max My	STR 1/ 111	0.0	2.9	2.9
Load No.	Max Mz	STR 1/ 9	1.4	2.5	2.9
12	Max Mxy	STR 1/ 101	0.0	-2.0	2.0
	Max Mxz	STR 1/ 7	2.1	1.6	2.6
Member	Max Myz	STR 1/ 101	0.0	-2.0	2.0
756	Min Fx	STR 1/ 120	0.0	3.1	3.1
	Min Fy	STR 1/ 1	0.0	1.1	1.1
Joint	Min Fz	STR 1/ 83	0.0	-2.1	2.1
738	Min Mx	STR 1/ 7	2.1	1.6	2.6
	Min My	STR 1/ 101	0.0	-2.0	2.0
	Min Mz	STR 1/ 8	0.7	1.1	1.3
	Min Mxy	STR 1/ 111	0.0	2.9	2.9
	Min Mxz	STR 1/ 1	0.0	1.1	1.1
	Min Myz	STR 1/ 111	0.0	2.9	2.9

Shear in Diagonals

Back Span
Member End Forces (Local)
STRI

$V = \sqrt{Fy^2 + Fz^2}$

	Max/ Min ID	Combo ID	Fy (kips)	Fz (kips)	$V_{resultant}$ (kips)
	Max Fx	STR 1/ 83	0.0	19.2	19.2
	Max Fy	STR 1/ 1	0.0	11.2	11.2
	Max Fz	STR 1/ 83	0.0	19.2	19.2
	Max Mx	STR 1/ 7	-6.3	9.3	11.2
	Max My	STR 1/ 129	0.0	0.5	0.5
Load No.	Max Mz	STR 1/ 1	0.0	11.2	11.2
13	Max Mxy	STR 1/ 83	0.0	19.2	19.2
	Max Mxz	STR 1/ 7	-6.3	9.3	11.2
Member	Max Myz	STR 1/ 88	-6.3	13.6	15.0
759	Min Fx	STR 1/ 120	0.0	1.0	1.0
	Min Fy	STR 1/ 7	-6.3	9.3	11.2
Joint	Min Fz	STR 1/ 129	0.0	0.5	0.5
739	Min Mx	STR 1/ 1	0.0	11.2	11.2
	Min My	STR 1/ 83	0.0	19.2	19.2
	Min Mz	STR 1/ 7	-6.3	9.3	11.2
	Min Mxy	STR 1/ 129	0.0	0.5	0.5
	Min Mxz	STR 1/ 1	0.0	11.2	11.2
	Min Myz	STR 1/ 129	0.0	0.5	0.5
	Max Fx	STR 1/ 120	0.0	0.5	0.5
	Max Fy	STR 1/ 7	6.3	-7.8	10.0
	Max Fz	STR 1/ 129	0.0	1.0	1.0
	Max Mx	STR 1/ 1	0.0	-9.7	9.7
	Max My	STR 1/ 129	0.0	1.0	1.0
Load No.	Max Mz	STR 1/ 7	6.3	-7.8	10.0
14	Max Mxy	STR 1/ 56	0.0	-17.7	17.7
	Max Mxz	STR 1/ 7	6.3	-7.8	10.0
Member	Max Myz	STR 1/ 56	0.0	-17.7	17.7
759	Min Fx	STR 1/ 83	0.0	-18.1	18.1
	Min Fy	STR 1/ 1	0.0	-9.7	9.7
Joint	Min Fz	STR 1/ 83	0.0	-18.1	18.1
740	Min Mx	STR 1/ 7	6.3	-7.8	10.0
	Min My	STR 1/ 56	0.0	-17.7	17.7
	Min Mz	STR 1/ 1	0.0	-9.7	9.7
	Min Mxy	STR 1/ 12	0.0	-0.1	0.1
	Min Mxz	STR 1/ 1	0.0	-9.7	9.7
	Min Myz	STR 1/ 12	0.0	-0.1	0.1

Shear in Diagonals

Back Span
Member End Forces (Local)
STRI

$V = sqrt(Fy^2 + Fz^2)$

	Max/ Min ID	Combo ID	Fy (kips)	Fz (kips)	$V_{resultant}$ (kips)
	Max Fx	STR 1/ 156	0.0	-3.6	3.6
	Max Fy	STR 1/ 1	0.0	2.3	2.3
	Max Fz	STR 1/ 56	0.0	5.3	5.3
	Max Mx	STR 1/ 7	-0.7	1.8	1.9
	Max My	STR 1/ 156	0.0	-3.6	3.6
Load No.	Max Mz	STR 1/ 1	0.0	2.3	2.3
15	Max Mxy	STR 1/ 156	0.0	-3.6	3.6
	Max Mxz	STR 1/ 7	-0.7	1.8	1.9
Member	Max Myz	STR 1/ 156	0.0	-3.6	3.6
762	Min Fx	STR 1/ 56	0.0	5.3	5.3
	Min Fy	STR 1/ 7	-0.7	1.8	1.9
Joint	Min Fz	STR 1/ 156	0.0	-3.6	3.6
741	Min Mx	STR 1/ 1	0.0	2.3	2.3
	Min My	STR 1/ 56	0.0	5.3	5.3
	Min Mz	STR 1/ 7	-0.7	1.8	1.9
	Min Mxy	STR 1/ 83	0.0	4.2	4.2
	Min Mxz	STR 1/ 1	0.0	2.3	2.3
	Min Myz	STR 1/ 83	0.0	4.2	4.2
	Max Fx	STR 1/ 56	0.0	-0.2	0.2
	Max Fy	STR 1/ 7	0.7	5.4	5.4
	Max Fz	STR 1/ 156	0.0	10.7	10.7
	Max Mx	STR 1/ 1	0.0	4.9	4.9
	Max My	STR 1/ 156	0.0	10.7	10.7
Load No.	Max Mz	STR 1/ 9	0.0	6.6	6.6
16	Max Mxy	STR 1/ 56	0.0	-0.2	0.2
	Max Mxz	STR 1/ 7	0.7	5.4	5.4
Member	Max Myz	STR 1/ 56	0.0	-0.2	0.2
762	Min Fx	STR 1/ 156	0.0	10.7	10.7
	Min Fy	STR 1/ 1	0.0	4.9	4.9
Joint	Min Fz	STR 1/ 56	0.0	-0.2	0.2
742	Min Mx	STR 1/ 7	0.7	5.4	5.4
	Min My	STR 1/ 56	0.0	-0.2	0.2
	Min Mz	STR 1/ 8	0.7	4.3	4.4
	Min Mxy	STR 1/ 114	0.0	6.0	6.0
	Min Mxz	STR 1/ 1	0.0	4.9	4.9
	Min Myz	STR 1/ 114	0.0	6.0	6.0

Shear in Diagonals

Back Span
Member End Forces (Local)
STRI

$V = \sqrt{Fy^2 + Fz^2}$

	Max/ Min ID	Combo ID	Fy (kips)	Fz (kips)	$V_{resultant}$ (kips)
	Max Fx	STR 1/ 56	0.0	14.3	14.3
	Max Fy	STR 1/ 1	0.0	1.5	1.5
	Max Fz	STR 1/ 56	0.0	14.3	14.3
	Max Mx	STR 1/ 7	-3.3	-0.1	3.3
	Max My	STR 1/ 156	0.0	-21.3	21.3
Load No.	Max Mz	STR 1/ 1	0.0	1.5	1.5
17	Max Mxy	STR 1/ 156	0.0	-21.3	21.3
	Max Mxz	STR 1/ 61	-3.3	6.6	7.4
Member	Max Myz	STR 1/ 156	0.0	-21.3	21.3
765	Min Fx	STR 1/ 156	0.0	-21.3	21.3
	Min Fy	STR 1/ 7	-3.3	-0.1	3.3
Joint	Min Fz	STR 1/ 156	0.0	-21.3	21.3
743	Min Mx	STR 1/ 1	0.0	1.5	1.5
	Min My	STR 1/ 56	0.0	14.3	14.3
	Min Mz	STR 1/ 61	-3.3	6.6	7.4
	Min Mxy	STR 1/ 168	0.0	4.4	4.4
	Min Mxz	STR 1/ 55	0.0	8.1	8.1
	Min Myz	STR 1/ 168	0.0	4.4	4.4
	Max Fx	STR 1/ 156	0.0	23.1	23.1
	Max Fy	STR 1/ 7	3.3	1.8	3.8
	Max Fz	STR 1/ 156	0.0	23.1	23.1
	Max Mx	STR 1/ 1	0.0	0.2	0.2
	Max My	STR 1/ 156	0.0	23.1	23.1
Load No.	Max Mz	STR 1/ 7	3.3	1.8	3.8
18	Max Mxy	STR 1/ 56	0.0	-13.0	13.0
	Max Mxz	STR 1/ 7	3.3	1.8	3.8
Member	Max Myz	STR 1/ 56	0.0	-13.0	13.0
765	Min Fx	STR 1/ 56	0.0	-13.0	13.0
	Min Fy	STR 1/ 1	0.0	0.2	0.2
Joint	Min Fz	STR 1/ 56	0.0	-13.0	13.0
744	Min Mx	STR 1/ 7	3.3	1.8	3.8
	Min My	STR 1/ 56	0.0	-13.0	13.0
	Min Mz	STR 1/ 1	0.0	0.2	0.2
	Min Mxy	STR 1/ 100	0.0	6.3	6.3
	Min Mxz	STR 1/ 1	0.0	0.2	0.2
	Min Myz	STR 1/ 100	0.0	6.3	6.3

Shear in Diagonals

Back Span
Member End Forces (Local)
STRI

$V = sqrt(Fy^2 + Fz^2)$

	Max/ Min ID	Combo ID	Fy (kips)	Fz (kips)	$V_{resultant}$ (kips)
	Max Fx	STR 1/ 156	0.0	-1.7	1.7
	Max Fy	STR 1/ 9	1.8	4.3	4.7
	Max Fz	STR 1/ 56	0.0	8.2	8.2
	Max Mx	STR 1/ 8	-1.1	6.4	6.5
	Max My	STR 1/ 156	0.0	-1.7	1.7
Load No.	Max Mz	STR 1/ 9	1.8	4.3	4.7
19	Max Mxy	STR 1/ 156	0.0	-1.7	1.7
	Max Mxz	STR 1/ 9	1.8	4.3	4.7
Member	Max Myz	STR 1/ 156	0.0	-1.7	1.7
768	Min Fx	STR 1/ 56	0.0	8.2	8.2
	Min Fy	STR 1/ 8	-1.1	6.4	6.5
Joint	Min Fz	STR 1/ 156	0.0	-1.7	1.7
745	Min Mx	STR 1/ 9	1.8	4.3	4.7
	Min My	STR 1/ 56	0.0	8.2	8.2
	Min Mz	STR 1/ 62	-1.1	6.8	6.9
	Min Mxy	STR 1/ 190	0.0	4.4	4.4
	Min Mxz	STR 1/ 55	0.0	7.3	7.3
	Min Myz	STR 1/ 190	0.0	4.4	4.4
	Max Fx	STR 1/ 56	0.0	-2.1	2.1
	Max Fy	STR 1/ 8	1.1	2.1	2.4
	Max Fz	STR 1/ 156	0.0	10.2	10.2
	Max Mx	STR 1/ 9	-1.8	4.2	4.6
	Max My	STR 1/ 156	0.0	10.2	10.2
Load No.	Max Mz	STR 1/ 9	-1.8	4.2	4.6
20	Max Mxy	STR 1/ 56	0.0	-2.1	2.1
	Max Mxz	STR 1/ 9	-1.8	4.2	4.6
Member	Max Myz	STR 1/ 56	0.0	-2.1	2.1
768	Min Fx	STR 1/ 156	0.0	10.2	10.2
	Min Fy	STR 1/ 9	-1.8	4.2	4.6
Joint	Min Fz	STR 1/ 56	0.0	-2.1	2.1
746	Min Mx	STR 1/ 8	1.1	2.1	2.4
	Min My	STR 1/ 56	0.0	-2.1	2.1
	Min Mz	STR 1/ 8	1.1	2.1	2.4
	Min Mxy	STR 1/ 149	0.0	8.1	8.1
	Min Mxz	STR 1/ 1	0.0	1.6	1.6
	Min Myz	STR 1/ 149	0.0	8.1	8.1

Shear in Diagonals

Back Span
Member End Forces (Local)
STRI

$V = \sqrt{(Fy^2 + Fz^2)}$

	Max/ Min ID	Combo ID	Fy (kips)	Fz (kips)	$V_{resultant}$ (kips)
	Max Fx	STR 1/ 159	0.0	92.9	92.9
	Max Fy	STR 1/ 8	4.7	31.2	31.6
	Max Fz	STR 1/ 156	0.0	95.2	95.2
	Max Mx	STR 1/ 62	4.7	18.1	18.7
	Max My	STR 1/ 56	0.0	7.0	7.0
Load No.	Max Mz	STR 1/ 62	4.7	18.1	18.7
21	Max Mxy	STR 1/ 156	0.0	95.2	95.2
	Max Mxz	STR 1/ 45	-7.9	82.2	82.6
Member	Max Myz	STR 1/ 156	0.0	95.2	95.2
771	Min Fx	STR 1/ 56	0.0	7.0	7.0
	Min Fy	STR 1/ 9	-7.9	44.9	45.6
Joint	Min Fz	STR 1/ 56	0.0	7.0	7.0
747	Min Mx	STR 1/ 9	-7.9	44.9	45.6
	Min My	STR 1/ 156	0.0	95.2	95.2
	Min Mz	STR 1/ 45	-7.9	82.2	82.6
	Min Mxy	STR 1/ 82	0.0	34.3	34.3
	Min Mxz	STR 1/ 65	0.0	22.5	22.5
	Min Myz	STR 1/ 82	0.0	34.3	34.3
	Max Fx	STR 1/ 56	0.0	-7.0	7.0
	Max Fy	STR 1/ 9	7.9	-44.9	45.6
	Max Fz	STR 1/ 56	0.0	-7.0	7.0
	Max Mx	STR 1/ 9	7.9	-44.9	45.6
	Max My	STR 1/ 56	0.0	-7.0	7.0
Load No.	Max Mz	STR 1/ 8	-4.7	-31.2	31.6
22	Max Mxy	STR 1/ 156	0.0	-95.2	95.2
	Max Mxz	STR 1/ 36	7.9	-66.7	67.2
Member	Max Myz	STR 1/ 156	0.0	-95.2	95.2
771	Min Fx	STR 1/ 159	0.0	-92.9	92.9
	Min Fy	STR 1/ 8	-4.7	-31.2	31.6
Joint	Min Fz	STR 1/ 156	0.0	-95.2	95.2
748	Min Mx	STR 1/ 62	-4.7	-18.1	18.7
	Min My	STR 1/ 156	0.0	-95.2	95.2
	Min Mz	STR 1/ 36	7.9	-66.7	67.2
	Min Mxy	STR 1/ 56	0.0	-7.0	7.0
	Min Mxz	STR 1/ 55	0.0	-12.5	12.5
	Min Myz	STR 1/ 56	0.0	-7.0	7.0

Max North Vertical	**95.2**	**kips**
Max Diagonal	**25.2**	**kips**

Shear in Diagonals

Back Span
Member End Forces (Local)
STRIII

$V = \sqrt{Fy^2 + Fz^2}$

	Max/ Min ID	Combo ID	Fy (kips)	Fz (kips)	$V_{resultant}$ (kips)
	Max Fx	STR 3/ 49	-1.0	6.4	6.5
	Max Fy	STR 3/ 5	-1.0	3.6	3.7
	Max Fz	STR 3/ 109	-1.0	6.5	6.6
	Max Mx	STR 3/ 10	-2.5	4.4	5.1
	Max My	STR 3/ 135	-1.0	1.5	1.8
Load No.	Max Mz	STR 3/ 5	-1.0	3.6	3.7
1	Max Mxy	STR 3/ 135	-1.0	1.5	1.8
	Max Mxz	STR 3/ 1	-2.8	4.3	5.1
Member	Max Myz	STR 3/ 135	-1.0	1.5	1.8
741	Min Fx	STR 3/ 195	-1.0	1.6	1.9
	Min Fy	STR 3/ 1	-2.8	4.3	5.1
Joint	Min Fz	STR 3/ 135	-1.0	1.5	1.8
727	Min Mx	STR 3/ 5	-1.0	3.6	3.7
	Min My	STR 3/ 109	-1.0	6.5	6.6
	Min Mz	STR 3/ 1	-2.8	4.3	5.1
	Min Mxy	STR 3/ 159	-1.0	4.1	4.2
	Min Mxz	STR 3/ 5	-1.0	3.6	3.7
	Min Myz	STR 3/ 159	-1.0	4.1	4.2
	Max Fx	STR 3/ 195	-0.1	8.9	8.9
	Max Fy	STR 3/ 5	-0.1	10.5	10.5
	Max Fz	STR 3/ 15	-0.1	10.7	10.7
	Max Mx	STR 3/ 5	-0.1	10.5	10.5
	Max My	STR 3/ 135	-0.1	9.0	9.0
Load No.	Max Mz	STR 3/ 10	-1.3	8.2	8.3
2	Max Mxy	STR 3/ 135	-0.1	9.0	9.0
	Max Mxz	STR 3/ 10	-1.3	8.2	8.3
Member	Max Myz	STR 3/ 135	-0.1	9.0	9.0
741	Min Fx	STR 3/ 49	-0.1	4.9	4.9
	Min Fy	STR 3/ 10	-1.3	8.2	8.3
Joint	Min Fz	STR 3/ 229	-0.1	3.1	3.1
728	Min Mx	STR 3/ 10	-1.3	8.2	8.3
	Min My	STR 3/ 109	-0.1	4.7	4.7
	Min Mz	STR 3/ 5	-0.1	10.5	10.5
	Min Mxy	STR 3/ 159	-0.1	3.6	3.6
	Min Mxz	STR 3/ 5	-0.1	10.5	10.5
	Min Myz	STR 3/ 158	-0.6	4.1	4.1

Shear in Diagonals

Back Span
Member End Forces (Local)
STRIII

$V = \sqrt{Fy^2 + Fz^2}$

	Max/ Min ID	Combo ID	Fy (kips)	Fz (kips)	$V_{resultant}$ (kips)
	Max Fx	STR 3/ 190	-2.7	2.4	3.6
	Max Fy	STR 3/ 1	0.6	2.3	2.4
	Max Fz	STR 3/ 109	0.1	6.3	6.3
	Max Mx	STR 3/ 5	0.1	0.9	0.9
	Max My	STR 3/ 5	0.1	0.9	0.9
Load No.	Max Mz	STR 3/ 1	0.6	2.3	2.4
3	Max Mxy	STR 3/ 5	0.1	0.9	0.9
	Max Mxz	STR 3/ 1	0.6	2.3	2.4
Member	Max Myz	STR 3/ 2	0.6	1.8	1.9
744	Min Fx	STR 3/ 59	0.1	6.1	6.1
	Min Fy	STR 3/ 10	-2.7	2.7	3.8
Joint	Min Fz	STR 3/ 125	0.1	0.3	0.3
729	Min Mx	STR 3/ 1	0.6	2.3	2.4
	Min My	STR 3/ 239	0.1	5.7	5.7
	Min Mz	STR 3/ 10	-2.7	2.7	3.8
	Min Mxy	STR 3/ 225	0.1	2.9	2.9
	Min Mxz	STR 3/ 10	-2.7	2.7	3.8
	Min Myz	STR 3/ 40	-2.7	4.3	5.1
	Max Fx	STR 3/ 59	0.7	1.2	1.4
	Max Fy	STR 3/ 10	5.2	3.3	6.2
	Max Fz	STR 3/ 3	1.7	3.9	4.3
	Max Mx	STR 3/ 1	1.8	3.8	4.2
	Max My	STR 3/ 135	0.7	2.8	2.9
Load No.	Max Mz	STR 3/ 5	0.7	3.9	4.0
4	Max Mxy	STR 3/ 110	5.2	0.7	5.2
	Max Mxz	STR 3/ 10	5.2	3.3	6.2
Member	Max Myz	STR 3/ 110	5.2	0.7	5.2
744	Min Fx	STR 3/ 190	5.2	2.0	5.6
	Min Fy	STR 3/ 5	0.7	3.9	4.0
Joint	Min Fz	STR 3/ 230	5.2	-0.4	5.2
730	Min Mx	STR 3/ 5	0.7	3.9	4.0
	Min My	STR 3/ 110	5.2	0.7	5.2
	Min Mz	STR 3/ 10	5.2	3.3	6.2
	Min Mxy	STR 3/ 135	0.7	2.8	2.9
	Min Mxz	STR 3/ 5	0.7	3.9	4.0
	Min Myz	STR 3/ 135	0.7	2.8	2.9

Shear in Diagonals

Back Span
Member End Forces (Local)
STRIII

$V = \sqrt{Fy^2 + Fz^2}$

	Max/ Min ID	Combo ID	Fy (kips)	Fz (kips)	$V_{resultant}$ (kips)
	Max Fx	STR 3/ 119	0.6	24.9	24.9
	Max Fy	STR 3/ 1	1.4	16.6	16.7
	Max Fz	STR 3/ 119	0.6	24.9	24.9
	Max Mx	STR 3/ 1	1.4	16.6	16.7
	Max My	STR 3/ 125	0.6	12.5	12.5
Load No.	Max Mz	STR 3/ 1	1.4	16.6	16.7
5	Max Mxy	STR 3/ 119	0.6	24.9	24.9
	Max Mxz	STR 3/ 1	1.4	16.6	16.7
Member	Max Myz	STR 3/ 118	1.0	24.5	24.5
747	Min Fx	STR 3/ 125	0.6	12.5	12.5
	Min Fy	STR 3/ 10	-3.6	16.1	16.5
Joint	Min Fz	STR 3/ 125	0.6	12.5	12.5
731	Min Mx	STR 3/ 5	0.6	14.0	14.0
	Min My	STR 3/ 119	0.6	24.9	24.9
	Min Mz	STR 3/ 10	-3.6	16.1	16.5
	Min Mxy	STR 3/ 125	0.6	12.5	12.5
	Min Mxz	STR 3/ 10	-3.6	16.1	16.5
	Min Myz	STR 3/ 125	0.6	12.5	12.5
	Max Fx	STR 3/ 125	-0.1	-13.2	13.2
	Max Fy	STR 3/ 10	5.2	-15.9	16.7
	Max Fz	STR 3/ 125	-0.1	-13.2	13.2
	Max Mx	STR 3/ 5	-0.1	-14.6	14.6
	Max My	STR 3/ 185	-0.1	-13.2	13.2
Load No.	Max Mz	STR 3/ 9	-0.1	-18.0	18.0
6	Max Mxy	STR 3/ 59	-0.1	-23.7	23.7
	Max Mxz	STR 3/ 10	5.2	-15.9	16.7
Member	Max Myz	STR 3/ 58	0.0	-23.5	23.5
747	Min Fx	STR 3/ 119	-0.1	-23.8	23.8
	Min Fy	STR 3/ 5	-0.1	-14.6	14.6
Joint	Min Fz	STR 3/ 119	-0.1	-23.8	23.8
732	Min Mx	STR 3/ 1	0.0	-16.3	16.3
	Min My	STR 3/ 59	-0.1	-23.7	23.7
	Min Mz	STR 3/ 10	5.2	-15.9	16.7
	Min Mxy	STR 3/ 185	-0.1	-13.2	13.2
	Min Mxz	STR 3/ 9	-0.1	-18.0	18.0
	Min Myz	STR 3/ 185	-0.1	-13.2	13.2

Shear in Diagonals

Back Span
Member End Forces (Local)
STRIII

$V = \sqrt{Fy^2 + Fz^2}$

	Max/ Min ID	Combo ID	Fy (kips)	Fz (kips)	$V_{resultant}$ (kips)
	Max Fx	STR 3/ 185	0.3	6.4	6.4
	Max Fy	STR 3/ 1	1.1	9.0	9.1
	Max Fz	STR 3/ 59	0.3	11.4	11.4
	Max Mx	STR 3/ 5	0.3	8.0	8.0
	Max My	STR 3/ 185	0.3	6.4	6.4
Load No.	Max Mz	STR 3/ 1	1.1	9.0	9.1
7	Max Mxy	STR 3/ 59	0.3	11.4	11.4
	Max Mxz	STR 3/ 1	1.1	9.0	9.1
Member	Max Myz	STR 3/ 57	1.0	11.0	11.0
750	Min Fx	STR 3/ 59	0.3	11.4	11.4
	Min Fy	STR 3/ 10	-0.7	8.6	8.6
Joint	Min Fz	STR 3/ 185	0.3	6.4	6.4
733	Min Mx	STR 3/ 1	1.1	9.0	9.1
	Min My	STR 3/ 59	0.3	11.4	11.4
	Min Mz	STR 3/ 10	-0.7	8.6	8.6
	Min Mxy	STR 3/ 185	0.3	6.4	6.4
	Min Mxz	STR 3/ 10	-0.7	8.6	8.6
	Min Myz	STR 3/ 190	-0.7	6.9	6.9
	Max Fx	STR 3/ 59	0.4	-3.8	3.8
	Max Fy	STR 3/ 10	3.1	-2.1	3.7
	Max Fz	STR 3/ 70	3.1	-1.9	3.6
	Max Mx	STR 3/ 1	1.3	-2.5	2.8
	Max My	STR 3/ 190	3.1	-2.3	3.9
Load No.	Max Mz	STR 3/ 5	0.4	-2.6	2.6
8	Max Mxy	STR 3/ 58	0.8	-3.8	3.9
	Max Mxz	STR 3/ 10	3.1	-2.1	3.7
Member	Max Myz	STR 3/ 60	3.1	-3.5	4.7
750	Min Fx	STR 3/ 185	0.4	-2.8	2.8
	Min Fy	STR 3/ 5	0.4	-2.6	2.6
Joint	Min Fz	STR 3/ 174	0.8	-4.4	4.5
734	Min Mx	STR 3/ 5	0.4	-2.6	2.6
	Min My	STR 3/ 59	0.4	-3.8	3.8
	Min Mz	STR 3/ 10	3.1	-2.1	3.7
	Min Mxy	STR 3/ 190	3.1	-2.3	3.9
	Min Mxz	STR 3/ 5	0.4	-2.6	2.6
	Min Myz	STR 3/ 185	0.4	-2.8	2.8

Shear in Diagonals

Back Span
Member End Forces (Local)
STRIII

$V = \sqrt{Fy^2 + Fz^2}$

	Max/ Min ID	Combo ID	Fy (kips)	Fz (kips)	$V_{resultant}$ (kips)
	Max Fx	STR 3/ 179	0.3	23.5	23.5
	Max Fy	STR 3/ 1	0.8	17.4	17.4
	Max Fz	STR 3/ 179	0.3	23.5	23.5
	Max Mx	STR 3/ 10	-3.5	16.1	16.5
	Max My	STR 3/ 185	0.3	14.6	14.6
Load No.	Max Mz	STR 3/ 1	0.8	17.4	17.4
9	Max Mxy	STR 3/ 59	0.3	23.4	23.4
	Max Mxz	STR 3/ 1	0.8	17.4	17.4
Member	Max Myz	STR 3/ 58	0.4	23.0	23.0
753	Min Fx	STR 3/ 65	0.3	14.5	14.5
	Min Fy	STR 3/ 10	-3.5	16.1	16.5
Joint	Min Fz	STR 3/ 65	0.3	14.5	14.5
735	Min Mx	STR 3/ 1	0.8	17.4	17.4
	Min My	STR 3/ 59	0.3	23.4	23.4
	Min Mz	STR 3/ 10	-3.5	16.1	16.5
	Min Mxy	STR 3/ 185	0.3	14.6	14.6
	Min Mxz	STR 3/ 10	-3.5	16.1	16.5
	Min Myz	STR 3/ 185	0.3	14.6	14.6
	Max Fx	STR 3/ 65	0.1	-14.3	14.3
	Max Fy	STR 3/ 10	4.8	-15.1	15.8
	Max Fz	STR 3/ 65	0.1	-14.3	14.3
	Max Mx	STR 3/ 1	0.4	-16.4	16.4
	Max My	STR 3/ 65	0.1	-14.3	14.3
Load No.	Max Mz	STR 3/ 5	0.1	-14.8	14.8
10	Max Mxy	STR 3/ 179	0.1	-22.0	22.0
	Max Mxz	STR 3/ 10	4.8	-15.1	15.8
Member	Max Myz	STR 3/ 178	0.4	-21.7	21.7
753	Min Fx	STR 3/ 179	0.1	-22.0	22.0
	Min Fy	STR 3/ 5	0.1	-14.8	14.8
Joint	Min Fz	STR 3/ 179	0.1	-22.0	22.0
736	Min Mx	STR 3/ 10	4.8	-15.1	15.8
	Min My	STR 3/ 179	0.1	-22.0	22.0
	Min Mz	STR 3/ 10	4.8	-15.1	15.8
	Min Mxy	STR 3/ 65	0.1	-14.3	14.3
	Min Mxz	STR 3/ 5	0.1	-14.8	14.8
	Min Myz	STR 3/ 65	0.1	-14.3	14.3

Shear in Diagonals

Back Span
Member End Forces (Local)
STRIII

$V = \sqrt{Fy^2 + Fz^2}$

	Max/ Min ID	Combo ID	Fy (kips)	Fz (kips)	$V_{resultant}$ (kips)
	Max Fx	STR 3/ 85	0.4	3.5	3.5
	Max Fy	STR 3/ 1	1.5	5.0	5.2
	Max Fz	STR 3/ 19	0.4	6.8	6.8
	Max Mx	STR 3/ 5	0.4	3.8	3.8
	Max My	STR 3/ 105	0.4	3.5	3.5
Load No.	Max Mz	STR 3/ 1	1.5	5.0	5.2
11	Max Mxy	STR 3/ 138	1.0	6.4	6.5
	Max Mxz	STR 3/ 1	1.5	5.0	5.2
Member	Max Myz	STR 3/ 131	1.5	5.4	5.6
756	Min Fx	STR 3/ 139	0.4	6.7	6.7
	Min Fy	STR 3/ 5	0.4	3.8	3.8
Joint	Min Fz	STR 3/ 205	0.4	3.4	3.4
737	Min Mx	STR 3/ 1	1.5	5.0	5.2
	Min My	STR 3/ 139	0.4	6.7	6.7
	Min Mz	STR 3/ 9	0.4	6.3	6.3
	Min Mxy	STR 3/ 235	0.4	3.9	3.9
	Min Mxz	STR 3/ 9	0.4	6.3	6.3
	Min Myz	STR 3/ 235	0.4	3.9	3.9
	Max Fx	STR 3/ 139	0.3	-0.5	0.6
	Max Fy	STR 3/ 10	2.0	2.3	3.0
	Max Fz	STR 3/ 90	2.0	2.5	3.2
	Max Mx	STR 3/ 1	0.8	2.0	2.2
	Max My	STR 3/ 65	0.3	2.2	2.2
Load No.	Max Mz	STR 3/ 5	0.3	2.1	2.1
12	Max Mxy	STR 3/ 178	0.6	-0.4	0.7
	Max Mxz	STR 3/ 10	2.0	2.3	3.0
Member	Max Myz	STR 3/ 176	0.8	-0.2	0.8
756	Min Fx	STR 3/ 85	0.3	2.4	2.4
	Min Fy	STR 3/ 5	0.3	2.1	2.1
Joint	Min Fz	STR 3/ 137	0.8	-0.5	0.9
738	Min Mx	STR 3/ 5	0.3	2.1	2.1
	Min My	STR 3/ 179	0.3	-0.4	0.5
	Min Mz	STR 3/ 10	2.0	2.3	3.0
	Min Mxy	STR 3/ 65	0.3	2.2	2.2
	Min Mxz	STR 3/ 5	0.3	2.1	2.1
	Min Myz	STR 3/ 65	0.3	2.2	2.2

Shear in Diagonals

Back Span
Member End Forces (Local)
STRIII

$V = \sqrt{Fy^2 + Fz^2}$

	Max/ Min ID	Combo ID	Fy (kips)	Fz (kips)	$V_{resultant}$ (kips)
	Max Fx	STR 3/ 139	0.1	14.8	14.8
	Max Fy	STR 3/ 1	0.8	7.4	7.4
	Max Fz	STR 3/ 139	0.1	14.8	14.8
	Max Mx	STR 3/ 5	0.1	4.3	4.3
	Max My	STR 3/ 105	0.1	1.0	1.0
Load No.	Max Mz	STR 3/ 1	0.8	7.4	7.4
13	Max Mxy	STR 3/ 139	0.1	14.8	14.8
	Max Mxz	STR 3/ 1	0.8	7.4	7.4
Member	Max Myz	STR 3/ 137	0.7	13.5	13.5
759	Min Fx	STR 3/ 85	0.1	1.5	1.5
	Min Fy	STR 3/ 10	-2.5	6.1	6.6
Joint	Min Fz	STR 3/ 105	0.1	1.0	1.0
739	Min Mx	STR 3/ 1	0.8	7.4	7.4
	Min My	STR 3/ 139	0.1	14.8	14.8
	Min Mz	STR 3/ 5	0.1	4.3	4.3
	Min Mxy	STR 3/ 105	0.1	1.0	1.0
	Min Mxz	STR 3/ 5	0.1	4.3	4.3
	Min Myz	STR 3/ 105	0.1	1.0	1.0
	Max Fx	STR 3/ 85	0.1	-0.7	0.7
	Max Fy	STR 3/ 10	3.6	-4.6	5.8
	Max Fz	STR 3/ 105	0.1	-0.2	0.2
	Max Mx	STR 3/ 1	0.3	-5.9	5.9
	Max My	STR 3/ 105	0.1	-0.2	0.2
Load No.	Max Mz	STR 3/ 5	0.1	-3.5	3.5
14	Max Mxy	STR 3/ 129	0.1	-12.6	12.6
	Max Mxz	STR 3/ 10	3.6	-4.6	5.8
Member	Max Myz	STR 3/ 130	3.6	-8.9	9.6
759	Min Fx	STR 3/ 139	0.1	-13.0	13.0
	Min Fy	STR 3/ 5	0.1	-3.5	3.5
Joint	Min Fz	STR 3/ 139	0.1	-13.0	13.0
740	Min Mx	STR 3/ 5	0.1	-3.5	3.5
	Min My	STR 3/ 129	0.1	-12.6	12.6
	Min Mz	STR 3/ 10	3.6	-4.6	5.8
	Min Mxy	STR 3/ 85	0.1	-0.7	0.7
	Min Mxz	STR 3/ 5	0.1	-3.5	3.5
	Min Myz	STR 3/ 85	0.1	-0.7	0.7

Shear in Diagonals

Back Span
Member End Forces (Local)
STRIII

$V = \sqrt{Fy^2 + Fz^2}$

	Max/ Min ID	Combo ID	Fy (kips)	Fz (kips)	$V_{resultant}$ (kips)
	Max Fx	STR 3/ 115	0.7	-3.0	3.1
	Max Fy	STR 3/ 1	2.0	1.4	2.4
	Max Fz	STR 3/ 129	0.7	3.9	4.0
	Max Mx	STR 3/ 5	0.7	0.0	0.7
	Max My	STR 3/ 115	0.7	-3.0	3.1
Load No.	Max Mz	STR 3/ 1	2.0	1.4	2.4
15	Max Mxy	STR 3/ 115	0.7	-3.0	3.1
	Max Mxz	STR 3/ 1	2.0	1.4	2.4
Member	Max Myz	STR 3/ 114	1.3	-2.8	3.1
762	Min Fx	STR 3/ 129	0.7	3.9	4.0
	Min Fy	STR 3/ 5	0.7	0.0	0.7
Joint	Min Fz	STR 3/ 115	0.7	-3.0	3.1
741	Min Mx	STR 3/ 1	2.0	1.4	2.4
	Min My	STR 3/ 129	0.7	3.9	4.0
	Min Mz	STR 3/ 5	0.7	0.0	0.7
	Min Mxy	STR 3/ 129	0.7	3.9	4.0
	Min Mxz	STR 3/ 5	0.7	0.0	0.7
	Min Myz	STR 3/ 129	0.7	3.9	4.0
	Max Fx	STR 3/ 129	0.1	2.3	2.3
	Max Fy	STR 3/ 10	1.0	6.0	6.1
	Max Fz	STR 3/ 114	0.3	9.0	9.0
	Max Mx	STR 3/ 1	0.4	5.7	5.7
	Max My	STR 3/ 115	0.1	9.0	9.0
Load No.	Max Mz	STR 3/ 5	0.1	6.0	6.0
16	Max Mxy	STR 3/ 121	0.4	2.6	2.6
	Max Mxz	STR 3/ 10	1.0	6.0	6.1
Member	Max Myz	STR 3/ 130	1.0	2.9	3.1
762	Min Fx	STR 3/ 115	0.1	9.0	9.0
	Min Fy	STR 3/ 5	0.1	6.0	6.0
Joint	Min Fz	STR 3/ 128	0.3	2.3	2.3
742	Min Mx	STR 3/ 5	0.1	6.0	6.0
	Min My	STR 3/ 129	0.1	2.3	2.3
	Min Mz	STR 3/ 10	1.0	6.0	6.1
	Min Mxy	STR 3/ 225	0.1	4.8	4.8
	Min Mxz	STR 3/ 5	0.1	6.0	6.0
	Min Myz	STR 3/ 225	0.1	4.8	4.8

Shear in Diagonals

Back Span
Member End Forces (Local)
STRIII

$V = \sqrt{Fy^2 + Fz^2}$

	Max/ Min ID	Combo ID	Fy (kips)	Fz (kips)	$V_{resultant}$ (kips)
	Max Fx	STR 3/ 129	0.6	7.9	7.9
	Max Fy	STR 3/ 1	2.0	-1.6	2.6
	Max Fz	STR 3/ 129	0.6	7.9	7.9
	Max Mx	STR 3/ 5	0.6	-4.6	4.6
	Max My	STR 3/ 115	0.6	-18.1	18.1
Load No.	Max Mz	STR 3/ 1	2.0	-1.6	2.6
17	Max Mxy	STR 3/ 115	0.6	-18.1	18.1
	Max Mxz	STR 3/ 1	2.0	-1.6	2.6
Member	Max Myz	STR 3/ 113	1.5	-16.9	17.0
765	Min Fx	STR 3/ 115	0.6	-18.1	18.1
	Min Fy	STR 3/ 10	-0.1	-2.9	2.9
Joint	Min Fz	STR 3/ 115	0.6	-18.1	18.1
743	Min Mx	STR 3/ 10	-0.1	-2.9	2.9
	Min My	STR 3/ 129	0.6	7.9	7.9
	Min Mz	STR 3/ 129	0.6	7.9	7.9
	Min Mxy	STR 3/ 149	0.6	2.6	2.7
	Min Mxz	STR 3/ 129	0.6	7.9	7.9
	Min Myz	STR 3/ 149	0.6	2.6	2.7
	Max Fx	STR 3/ 115	-0.3	19.2	19.2
	Max Fy	STR 3/ 10	1.3	4.6	4.8
	Max Fz	STR 3/ 115	-0.3	19.2	19.2
	Max Mx	STR 3/ 10	1.3	4.6	4.8
	Max My	STR 3/ 115	-0.3	19.2	19.2
Load No.	Max Mz	STR 3/ 5	-0.3	5.6	5.6
18	Max Mxy	STR 3/ 120	1.3	18.2	18.2
	Max Mxz	STR 3/ 10	1.3	4.6	4.8
Member	Max Myz	STR 3/ 120	1.3	18.2	18.2
765	Min Fx	STR 3/ 129	-0.3	-6.0	6.0
	Min Fy	STR 3/ 1	-0.8	3.4	3.5
Joint	Min Fz	STR 3/ 129	-0.3	-6.0	6.0
744	Min Mx	STR 3/ 5	-0.3	5.6	5.6
	Min My	STR 3/ 129	-0.3	-6.0	6.0
	Min Mz	STR 3/ 10	1.3	4.6	4.8
	Min Mxy	STR 3/ 159	-0.3	4.8	4.8
	Min Mxz	STR 3/ 5	-0.3	5.6	5.6
	Min Myz	STR 3/ 159	-0.3	4.8	4.8

Shear in Diagonals

Back Span
Member End Forces (Local)
STRIII

$V = \sqrt{Fy^2 + Fz^2}$

	Max/ Min ID	Combo ID	Fy (kips)	Fz (kips)	$V_{resultant}$ (kips)
	Max Fx	STR 3/ 115	1.1	-2.1	2.4
	Max Fy	STR 3/ 10	3.4	4.2	5.4
	Max Fz	STR 3/ 129	1.1	6.5	6.6
	Max Mx	STR 3/ 5	1.1	3.6	3.8
	Max My	STR 3/ 115	1.1	-2.1	2.4
Load No.	Max Mz	STR 3/ 10	3.4	4.2	5.4
19	Max Mxy	STR 3/ 120	3.4	-1.5	3.7
	Max Mxz	STR 3/ 10	3.4	4.2	5.4
Member	Max Myz	STR 3/ 120	3.4	-1.5	3.7
768	Min Fx	STR 3/ 129	1.1	6.5	6.6
	Min Fy	STR 3/ 5	1.1	3.6	3.8
Joint	Min Fz	STR 3/ 115	1.1	-2.1	2.4
745	Min Mx	STR 3/ 10	3.4	4.2	5.4
	Min My	STR 3/ 129	1.1	6.5	6.6
	Min Mz	STR 3/ 125	1.1	3.9	4.1
	Min Mxy	STR 3/ 125	1.1	3.9	4.1
	Min Mxz	STR 3/ 125	1.1	3.9	4.1
	Min Myz	STR 3/ 125	1.1	3.9	4.1
	Max Fx	STR 3/ 129	-0.1	0.8	0.8
	Max Fy	STR 3/ 5	-0.1	3.8	3.8
	Max Fz	STR 3/ 120	-0.6	10.0	10.0
	Max Mx	STR 3/ 10	-0.6	4.4	4.4
	Max My	STR 3/ 120	-0.6	10.0	10.0
Load No.	Max Mz	STR 3/ 5	-0.1	3.8	3.8
20	Max Mxy	STR 3/ 130	-0.6	1.6	1.7
	Max Mxz	STR 3/ 10	-0.6	4.4	4.4
Member	Max Myz	STR 3/ 126	-0.3	0.9	0.9
768	Min Fx	STR 3/ 115	-0.1	9.4	9.4
	Min Fy	STR 3/ 10	-0.6	4.4	4.4
Joint	Min Fz	STR 3/ 127	-0.3	0.8	0.9
746	Min Mx	STR 3/ 5	-0.1	3.8	3.8
	Min My	STR 3/ 129	-0.1	0.8	0.8
	Min Mz	STR 3/ 10	-0.6	4.4	4.4
	Min Mxy	STR 3/ 99	-0.1	8.3	8.3
	Min Mxz	STR 3/ 5	-0.1	3.8	3.8
	Min Myz	STR 3/ 99	-0.1	8.3	8.3

Shear in Diagonals

Back Span
Member End Forces (Local)
STRIII

$V = \sqrt{Fy^2 + Fz^2}$

	Max/ Min ID	Combo ID	Fy (kips)	Fz (kips)	$V_{resultant}$ (kips)
	Max Fx	STR 3/ 115	-4.6	97.5	97.6
	Max Fy	STR 3/ 5	-4.6	50.0	50.2
	Max Fz	STR 3/ 115	-4.6	97.5	97.6
	Max Mx	STR 3/ 121	-11.5	29.1	31.3
	Max My	STR 3/ 129	-4.6	21.4	21.9
Load No.	Max Mz	STR 3/ 125	-4.6	36.8	37.1
21	Max Mxy	STR 3/ 115	-4.6	97.5	97.6
	Max Mxz	STR 3/ 40	-12.5	82.2	83.1
Member	Max Myz	STR 3/ 115	-4.6	97.5	97.6
771	Min Fx	STR 3/ 130	-12.5	31.8	34.2
	Min Fy	STR 3/ 10	-12.5	44.9	46.6
Joint	Min Fz	STR 3/ 129	-4.6	21.4	21.9
747	Min Mx	STR 3/ 5	-4.6	50.0	50.2
	Min My	STR 3/ 115	-4.6	97.5	97.6
	Min Mz	STR 3/ 40	-12.5	82.2	83.1
	Min Mxy	STR 3/ 124	-7.4	35.4	36.2
	Min Mxz	STR 3/ 125	-4.6	36.8	37.1
	Min Myz	STR 3/ 9	-4.6	34.6	34.9
	Max Fx	STR 3/ 130	10.4	-31.8	33.5
	Max Fy	STR 3/ 10	10.4	-44.9	46.1
	Max Fz	STR 3/ 129	3.9	-22.8	23.1
	Max Mx	STR 3/ 5	3.9	-48.6	48.8
	Max My	STR 3/ 129	3.9	-22.8	23.1
Load No.	Max Mz	STR 3/ 10	10.4	-44.9	46.1
22	Max Mxy	STR 3/ 115	3.9	-96.1	96.2
	Max Mxz	STR 3/ 130	10.4	-31.8	33.5
Member	Max Myz	STR 3/ 115	3.9	-96.1	96.2
771	Min Fx	STR 3/ 115	3.9	-96.1	96.2
	Min Fy	STR 3/ 5	3.9	-48.6	48.8
Joint	Min Fz	STR 3/ 115	3.9	-96.1	96.2
748	Min Mx	STR 3/ 121	9.2	-29.1	30.5
	Min My	STR 3/ 115	3.9	-96.1	96.2
	Min Mz	STR 3/ 15	3.9	-70.4	70.5
	Min Mxy	STR 3/ 129	3.9	-22.8	23.1
	Min Mxz	STR 3/ 15	3.9	-70.4	70.5
	Min Myz	STR 3/ 129	3.9	-22.8	23.1

Max North Vertical	**97.6**	**kips**
Max Diagonal	**24.9**	**kips**

Calculation of Shear Capacity in Diagonal:

Given:

28 Day Concrete Strength:	$f'_c := 8.5 \cdot ksi$	Superstructure concrete strength
Width of Section:	$b_v := 1.75 \cdot ft$	
Depth of Section:	$h := 2 \cdot ft$	
Depth of Reinforcing Steel:	$d_{e1} := h - 2in - 0.5in - 0.5 \cdot 0.875in$ $d_{e1} = 21.06 \cdot in$	
β Factor:	$\beta := 2.0$	AASHTO LRFD 7th Ed., 2015 Interm, Sec. 5.8.3.4.1
θ Angle:	$\theta := 45 \cdot deg$	
Shear Resistance Factor:	$\phi_s := 0.9$	AASHTO LRFD 7th Ed., 2015 Interm, Sec. 5.5.4.2
Design Shear Force (Strength III):	$V_{u1} := 41.1 \cdot kip$	Sum-It Strength Output

Required:

1. Check the shear capacity of the section in the transverse direction.
2. Determine the required shear reinforcement.

Solution:

1. Check the shear capacity of the section in the transverse direction.

   a. Calculate the nominal shear capacity of the section:

   Calculate the effective shear depth:

   $d_{v1} := \max(0.72 \cdot h, 0.9 \cdot d_{e1})$ $\quad d_{v1} = 18.96 \cdot in$ — AASHTO LRFD 7th Ed., 2015 Interm, Sec. 5.8.2.9

   Calculate the nominal concrete shear capacity:

   $$V_{c1} := \min\left(0.25 \cdot f'_c \cdot b_v \cdot d_{v1}, 0.0316 \cdot \beta \cdot \sqrt{\frac{f'_c}{ksi}} \cdot ksi \cdot b_v \cdot d_{v1}\right)$$ — AASHTO LRFD 7th Ed., 2015 Interm, Sec. 5.8.3.3

   $V_{c1} = 73.3 \cdot kip$

   Calculate the nominal concrete shear capacity of the column sections:

   $V_{cr1} := \phi_s \cdot V_{c1}$ $\quad V_{cr1} = 66.0 \cdot kip$

b. Check to determine if tied reinforcement is required to resist the applied shear force:

$\frac{V_{cr1}}{2} = 33.01 \cdot kip$ < $V_{u1} = 41.1 \cdot kip$ **Therefore, tied reinforcement must be designed for the section.**

2. Determine the required tied member reinforcement.

Note: #4 stirrups will be used, therefore the required spacing will be calculated.

a. Design the required shear reinforcement:

Area of Shear Reinforcing Steel: $A_v := 2 \cdot (0.2 \cdot in^2)$ $A_v = 0.4 \cdot in^2$ (2 legs)

Yield Strength of Reinforcing Steel: $f_y := 60 \cdot ksi$

$$s_{req1a} := \max\left(\frac{A_v \cdot f_y \cdot d_{v1} \cdot \cot(\theta)}{\frac{V_{u1}}{\phi_s} - V_{c1}}, 0 \cdot in\right) \quad s_{req1a} = 0.00 \cdot in$$

AASHTO LRFD 7th Ed., 2015 Interm, Sec. C5.8.3.3

$s_{req1b} := \min(h, b_v)$ $s_{req1b} = 21 \cdot in$

AASHTO LRFD 7th Ed., 2015 Interm, Sec. 5.10.6.3

$s_{req1c} := 12 \cdot in$ $s_{req1c} = 12 \cdot in$

$s_{req1} := \text{if}(s_{req1a} = 0in, \min(s_{req1b}, s_{req1c}), \min(s_{req1a}, s_{req1b}, s_{req1c}))$

$s_{req1} = 12 \cdot in$

Therefore, use #4@12" stirrups.

Check minimum reinforcement (AASHTO LRFD 5.8.2.5):

$A_{v\_min} := 0.0316 \cdot \sqrt{\frac{f'_c}{ksi}} \cdot ksi \cdot \frac{b_v \cdot s_{req1}}{f_y} = 0.39 \cdot in^2$ Area of transverse reinforcement within distance s

$A_{v\_prov} := A_v = 0.4 \cdot in^2$

$Check := \text{if}(A_{v\_prov} \geq A_{v\_min}, \text{"OK"}, \text{"NG"})$

Check = "OK"

Calculation of Shear Capacity in Vertical Truss Member (North End):

Given:

28 Day Concrete Strength:	$f'_c := 8.5 \cdot ksi$	Superstructure concrete strength
Width of Section:	$b_v := 1.75 \cdot ft$	
Depth of Section:	$h := 3 \cdot ft$	
Depth of Reinforcing Steel:	$d_{e1} := h - 2in - 0.5in - 0.5 \cdot 0.875in$ $d_{e1} = 33.06 \cdot in$	
β Factor:	$\beta := 2.0$	AASHTO LRFD 7th Ed., 2015 Interm, Sec. 5.8.3.4.1
θ Angle:	$\theta := 45 \cdot deg$	
Shear Resistance Factor:	$\phi_s := 0.9$	AASHTO LRFD 7th Ed., 2015 Interm, Sec. 5.5.4.2
Design Shear Force (Strength III):	$V_{u1} := 98 \cdot kip$	Sum-It Strength Output

Required:

1. Check the shear capacity of the section in the transverse direction.
2. Determine the required shear reinforcement.

Solution:

1. Check the shear capacity of the section in the transverse direction.

   a. Calculate the nominal shear capacity of the section:

   Calculate the effective shear depth:

   $d_{v1} := \max(0.72 \cdot h, 0.9 \cdot d_{e1})$ $d_{v1} = 29.76 \cdot in$

   AASHTO LRFD 7th Ed., 2015 Interm, Sec. 5.8.2.9

   Calculate the nominal concrete shear capacity:

   $$V_{c1} := \min\left(0.25 \cdot f'_c \cdot b_v \cdot d_{v1}, 0.0316 \cdot \beta \cdot \sqrt{\frac{f'_c}{ksi}} \cdot ksi \cdot b_v \cdot d_{v1}\right)$$

   AASHTO LRFD 7th Ed., 2015 Interm, Sec. 5.8.3.3

   $V_{c1} = 115.1 \cdot kip$

   Calculate the nominal concrete shear capacity of the column sections:

   $V_{cr1} := \phi_s \cdot V_{c1}$ $V_{cr1} = 103.6 \cdot kip$

b. Check to determine if tied reinforcement is required to resist the applied shear force:

$\frac{V_{cr1}}{2} = 51.81 \cdot kip$ < $V_{u1} = 98 \cdot kip$ **Therefore, tied reinforcement must be designed for the section.**

2. Determine the required tied member reinforcement.

Note: #4 stirrups will be used, therefore the required spacing will be calculated.

a. Design the required shear reinforcement:

Area of Shear Reinforcing Steel: $A_v := 2 \cdot (0.20 \cdot in^2)$ $A_v = 0.40 \cdot in^2$ (2 legs)

Yield Strength of Reinforcing Steel: $f_y := 60 \cdot ksi$

$$s_{req1a} := \max\left(\frac{A_v \cdot f_y \cdot d_{v1} \cdot \cot(\theta)}{\frac{V_{u1}}{\phi_s} - V_{c1}}, 0 \cdot in\right) \quad s_{req1a} = 0.00 \cdot in$$

AASHTO LRFD 7th Ed., 2015 Interm, Sec. C5.8.3.3

$s_{req1b} := \min(h, b_v)$ $s_{req1b} = 21 \cdot in$

AASHTO LRFD 7th Ed., 2015 Interm, Sec. 5.10.6.3

$s_{req1c} := 12 \cdot in$ $s_{req1c} = 12 \cdot in$

$s_{req1} := \text{if}(s_{req1a} = 0in, \min(s_{req1b}, s_{req1c}), \min(s_{req1a}, s_{req1b}, s_{req1c}))$

$s_{req1} = 12.0 \cdot in$

Therefore, use #4@12" stirrups.

Check minimum reinforcement (AASHTO LRFD 5.8.2.5):

$s_{prov} := 12in$

$A_{v\_min} := 0.0316 \cdot \sqrt{\frac{f'_c}{ksi}} \cdot ksi \cdot \frac{b_v \cdot s_{prov}}{f_y} = 0.39 \cdot in^2$ Area of transverse reinforcement within distance s

$A_{v\_prov} := A_v = 0.4 \cdot in^2$

$Check := \text{if}(A_{v\_prov} \geq A_{v\_min}, "OK", "NG")$

$Check = "OK"$

Selected Limit States

STR 1 - STRENGTH I
STR 3 - STRENGTH III

Max/ Min ID	Load Num	Member Num	Joint Num	Limit State/ Combo ID	Fx (kips)	Fy (kips)	Fz (kips)	Mx (ft*kip)	My (ft*kip)	Mz (ft*kip)	Mxy (ft*kip)	Mxz (ft*kip)	Myz (ft*kip)
Max Fx	3	705	703	STR 1/ 47	3148.8	0.0	-0.1	-0.1	443.3	0.1	443.3	0.2	443.3
Max Fy	2	702	702	STR 3/ 4	-84.7	124.0	70.7	-0.1	537.2	381.0	537.2	381.0	658.6
Max Fz	2	702	702	STR 3/ 153	-71.5	-69.4	113.9	-0.1	723.3	-684.4	723.3	684.4	995.8
Max Mx	3	705	703	STR 3/ 130	1258.1	-10.9	-0.3	181.2	181.4	-188.1	256.4	261.2	261.3
Max My	1	702	701	STR 3/ 33	102.5	67.6	-112.8	0.1	753.9	1524.7	753.9	1524.7	1701.0
Max Mz	1	702	701	STR 3/ 123	75.9	67.6	-88.4	0.1	501.1	1524.9	501.1	1524.9	1605.1
Max Mxy	1	702	701	STR 3/ 33	102.5	67.6	-112.8	0.1	753.9	1524.7	753.9	1524.7	1701.0
Max Mxz	1	702	701	STR 3/ 4	97.6	-125.4	-69.6	0.1	382.9	-1980.2	382.9	1980.2	2016.8
Max Myz	1	702	701	STR 3/ 38	102.5	-125.4	-97.5	0.1	644.6	-1980.2	644.6	1980.2	2082.4
Min Fx	4	705	704	STR 1/ 47	-3136.9	0.0	26.3	0.1	-58.4	0.0	58.4	0.1	58.4
Min Fy	1	702	701	STR 3/ 4	97.6	-125.4	-69.6	0.1	382.9	-1980.2	382.9	1980.2	2016.8
Min Fz	1	702	701	STR 3/ 153	80.8	67.6	-113.2	0.1	752.7	1524.9	752.7	1524.9	1700.5
Min Mx	4	705	704	STR 3/ 130	-1249.5	6.0	19.1	-181.2	102.2	-58.0	208.1	190.3	117.5
Min My	4	705	704	STR 1/ 50	-2606.2	0.0	18.4	0.1	-133.5	0.0	133.5	0.1	133.5
Min Mz	1	702	701	STR 3/ 4	97.6	-125.4	-69.6	0.1	382.9	-1980.2	382.9	1980.2	2016.8
Min Mxy	20	729	720	STR 1/ 75	1018.0	0.0	-1.1	0.0	0.0	-0.1	0.0	0.1	0.1
Min Mxz	6	708	706	STR 1/ 1	897.4	0.0	23.0	0.0	78.5	0.0	78.5	0.0	78.5
Min Myz	20	729	720	STR 1/ 75	1018.0	0.0	-1.1	0.0	0.0	-0.1	0.0	0.1	0.1

Selected Limit States
STR 1 - STRENGTH I
STR 3 - STRENGTH III

	Combinded Results										
	Max/ Min ID	**Combo ID**	**Fx (kips)**	**Fy (kips)**	**Fz (kips)**	**Mx (ft*kip)**	**My (ft*kip)**	**Mz (ft*kip)**	**Mxy (ft*kip)**	**Mxz (ft*kip)**	**Myz (ft*kip)**
	Max Fx	STR 1/ 28	102.5	0.0	-96.0	0.1	639.6	-0.3	639.6	0.3	639.6
	Max Fy	STR 3/ 3	97.6	67.6	-88.0	0.1	502.3	1524.7	502.3	1524.7	1605.4
	Max Fz	STR 3/ 7	97.6	67.6	-54.4	0.1	273.6	1524.7	273.6	1524.7	1549.1
	Max Mx	STR 1/ 1	97.6	0.0	-71.2	0.1	388.0	-0.3	388.0	0.3	388.0
	Max My	STR 3/ 33	102.5	67.6	-112.8	0.1	753.9	1524.7	753.9	1524.7	1701.0
Load No.	Max Mz	STR 3/ 123	75.9	67.6	-88.4	0.1	501.1	1524.9	501.1	1524.9	1605.1
1	Max Mxy	STR 3/ 33	102.5	67.6	-112.8	0.1	753.9	1524.7	753.9	1524.7	1701.0
	Max Mxz	STR 3/ 4	97.6	-125.4	-69.6	0.1	382.9	-1980.2	382.9	1980.2	2016.8
Member	Max Myz	STR 3/ 38	102.5	-125.4	-97.5	0.1	644.6	-1980.2	644.6	1980.2	2082.4
702	Min Fx	STR 1/ 55	75.9	0.0	-71.6	0.1	386.8	-0.2	386.8	0.2	386.8
	Min Fy	STR 3/ 4	97.6	-125.4	-69.6	0.1	382.9	-1980.2	382.9	1980.2	2016.8
Joint	Min Fz	STR 3/ 153	80.8	67.6	-113.2	0.1	752.7	1524.9	752.7	1524.9	1700.5
701	Min Mx	STR 1/ 55	75.9	0.0	-71.6	0.1	386.8	-0.2	386.8	0.2	386.8
	Min My	STR 3/ 127	75.9	67.6	-54.8	0.1	272.4	1524.9	272.4	1524.9	1549.0
	Min Mz	STR 3/ 4	97.6	-125.4	-69.6	0.1	382.9	-1980.2	382.9	1980.2	2016.8
	Min Mxy	STR 3/ 127	75.9	67.6	-54.8	0.1	272.4	1524.9	272.4	1524.9	1549.0
	Min Mxz	STR 1/ 55	75.9	0.0	-71.6	0.1	386.8	-0.2	386.8	0.2	386.8
	Min Myz	STR 1/ 55	75.9	0.0	-71.6	0.1	386.8	-0.2	386.8	0.2	386.8
	Max Fx	STR 1/ 55	-66.6	0.0	71.6	-0.1	551.7	-0.1	551.7	0.1	551.7
	Max Fy	STR 3/ 4	-84.7	124.0	70.7	-0.1	537.2	381.0	537.2	381.0	658.6
	Max Fz	STR 3/ 153	-71.5	-69.4	113.9	-0.1	723.3	-684.4	723.3	684.4	995.8
	Max Mx	STR 1/ 55	-66.6	0.0	71.6	-0.1	551.7	-0.1	551.7	0.1	551.7
	Max My	STR 3/ 153	-71.5	-69.4	113.9	-0.1	723.3	-684.4	723.3	684.4	995.8
Load No.	Max Mz	STR 3/ 124	-66.6	124.0	71.2	-0.1	544.8	381.0	544.8	381.0	664.8
2	Max Mxy	STR 3/ 153	-71.5	-69.4	113.9	-0.1	723.3	-684.4	723.3	684.4	995.8
	Max Mxz	STR 3/ 3	-84.7	-69.4	88.7	-0.1	642.5	-684.4	642.5	684.4	938.7
Member	Max Myz	STR 3/ 153	-71.5	-69.4	113.9	-0.1	723.3	-684.4	723.3	684.4	995.8
702	Min Fx	STR 1/ 28	-89.6	0.0	96.0	-0.1	617.3	-0.1	617.3	0.2	617.3
	Min Fy	STR 3/ 3	-84.7	-69.4	88.7	-0.1	642.5	-684.4	642.5	684.4	938.7
Joint	Min Fz	STR 3/ 7	-84.7	-69.4	53.7	-0.1	445.6	-684.4	445.6	684.4	816.7
702	Min Mx	STR 1/ 1	-84.7	0.0	71.2	-0.1	544.1	-0.1	544.1	0.2	544.1
	Min My	STR 3/ 7	-84.7	-69.4	53.7	-0.1	445.6	-684.4	445.6	684.4	816.7
	Min Mz	STR 3/ 3	-84.7	-69.4	88.7	-0.1	642.5	-684.4	642.5	684.4	938.7
	Min Mxy	STR 3/ 7	-84.7	-69.4	53.7	-0.1	445.6	-684.4	445.6	684.4	816.7
	Min Mxz	STR 1/ 55	-66.6	0.0	71.6	-0.1	551.7	-0.1	551.7	0.1	551.7
	Min Myz	STR 3/ 5	-84.7	62.0	64.7	-0.1	497.0	190.4	497.0	190.4	532.2

	Combinded Results										
	Max/ Min ID	**Combo ID**	**Fx (kips)**	**Fy (kips)**	**Fz (kips)**	**Mx (ft*kip)**	**My (ft*kip)**	**Mz (ft*kip)**	**Mxy (ft*kip)**	**Mxz (ft*kip)**	**Myz (ft*kip)**
	Max Fx	STR 1/ 47	3148.8	0.0	-0.1	-0.1	443.3	0.1	443.3	0.2	443.3
	Max Fy	STR 1/ 9	2019.7	0.2	2.9	-3.6	290.8	4.2	290.8	5.5	290.9
	Max Fz	STR 1/ 148	2452.8	0.0	8.3	-0.1	264.2	0.1	264.2	0.2	264.2
	Max Mx	STR 3/ 130	1258.1	-10.9	-0.3	181.2	181.4	-188.1	256.4	261.2	261.3
	Max My	STR 1/ 20	2934.3	0.0	-0.4	-0.1	445.7	0.1	445.7	0.2	445.7
Load No.	Max Mz	STR 1/ 9	2019.7	0.2	2.9	-3.6	290.8	4.2	290.8	5.5	290.9
3	Max Mxy	STR 1/ 20	2934.3	0.0	-0.4	-0.1	445.7	0.1	445.7	0.2	445.7
	Max Mxz	STR 3/ 130	1258.1	-10.9	-0.3	181.2	181.4	-188.1	256.4	261.2	261.3
Member	Max Myz	STR 1/ 20	2934.3	0.0	-0.4	-0.1	445.7	0.1	445.7	0.2	445.7
705	Min Fx	STR 3/ 190	1188.2	-10.9	0.2	181.2	164.6	-188.1	244.8	261.2	249.9
	Min Fy	STR 3/ 10	1905.1	-10.9	0.0	181.2	285.5	-188.0	338.1	261.1	341.9
Joint	Min Fz	STR 1/ 56	2034.4	0.0	-0.6	-0.1	326.0	0.1	326.0	0.1	326.0
703	Min Mx	STR 1/ 9	2019.7	0.2	2.9	-3.6	290.8	4.2	290.8	5.5	290.9
	Min My	STR 1/ 193	1638.8	0.0	7.9	-0.1	153.8	0.1	153.8	0.1	153.8
	Min Mz	STR 3/ 130	1258.1	-10.9	-0.3	181.2	181.4	-188.1	256.4	261.2	261.3
	Min Mxy	STR 1/ 193	1638.8	0.0	7.9	-0.1	153.8	0.1	153.8	0.1	153.8
	Min Mxz	STR 1/ 55	1944.1	0.0	-0.5	-0.1	317.6	0.1	317.6	0.1	317.6
	Min Myz	STR 1/ 193	1638.8	0.0	7.9	-0.1	153.8	0.1	153.8	0.1	153.8
	Max Fx	STR 3/ 190	-1179.7	6.0	18.6	-181.2	106.7	-58.0	210.3	190.3	121.4
	Max Fy	STR 3/ 10	-1893.3	6.0	26.1	-181.2	97.6	-58.0	205.8	190.2	113.5
	Max Fz	STR 1/ 2	-2669.5	0.0	26.5	0.1	-37.3	0.0	37.3	0.1	37.3
	Max Mx	STR 1/ 9	-2007.9	-0.2	23.2	3.6	3.3	1.6	4.9	4.0	3.6
	Max My	STR 3/ 190	-1179.7	6.0	18.6	-181.2	106.7	-58.0	210.3	190.3	121.4
Load No.	Max Mz	STR 1/ 9	-2007.9	-0.2	23.2	3.6	3.3	1.6	4.9	4.0	3.6
4	Max Mxy	STR 3/ 190	-1179.7	6.0	18.6	-181.2	106.7	-58.0	210.3	190.3	121.4
	Max Mxz	STR 3/ 130	-1249.5	6.0	19.1	-181.2	102.2	-58.0	208.1	190.3	117.5
Member	Max Myz	STR 1/ 50	-2606.2	0.0	18.4	0.1	-133.5	0.0	133.5	0.1	133.5
705	Min Fx	STR 1/ 47	-3136.9	0.0	26.3	0.1	-58.4	0.0	58.4	0.1	58.4
	Min Fy	STR 1/ 9	-2007.9	-0.2	23.2	3.6	3.3	1.6	4.9	4.0	3.6
Joint	Min Fz	STR 1/ 202	-1797.2	0.0	10.8	0.1	-119.0	0.0	119.0	0.1	119.0
704	Min Mx	STR 3/ 130	-1249.5	6.0	19.1	-181.2	102.2	-58.0	208.1	190.3	117.5
	Min My	STR 1/ 50	-2606.2	0.0	18.4	0.1	-133.5	0.0	133.5	0.1	133.5
	Min Mz	STR 1/ 8	-2361.2	5.6	24.8	-60.4	-18.3	-67.7	63.1	90.8	70.1
	Min Mxy	STR 1/ 177	-1497.0	0.0	15.5	0.1	-0.9	0.0	0.9	0.1	0.9
	Min Mxz	STR 1/ 55	-1935.5	0.0	19.3	0.1	-28.2	0.0	28.2	0.1	28.2
	Min Myz	STR 1/ 177	-1497.0	0.0	15.5	0.1	-0.9	0.0	0.9	0.1	0.9

	Combinded Results										
	Max/ Min ID	**Combo ID**	**Fx (kips)**	**Fy (kips)**	**Fz (kips)**	**Mx (ft*kip)**	**My (ft*kip)**	**Mz (ft*kip)**	**Mxy (ft*kip)**	**Mxz (ft*kip)**	**Myz (ft*kip)**
	Max Fx	STR 3/ 190	-386.9	-23.5	-13.5	53.5	66.5	-284.1	85.3	289.1	291.8
	Max Fy	STR 1/ 9	-659.7	0.9	-16.7	-1.1	123.6	8.5	123.6	8.6	123.9
	Max Fz	STR 1/ 166	-435.2	0.0	-0.5	0.0	40.6	0.1	40.6	0.1	40.6
	Max Mx	STR 3/ 10	-628.9	-23.5	-23.0	53.5	137.7	-284.1	147.7	289.1	315.7
	Max My	STR 1/ 47	-965.2	0.0	-32.4	0.0	236.2	0.3	236.2	0.3	236.2
Load No.	Max Mz	STR 1/ 9	-659.7	0.9	-16.7	-1.1	123.6	8.5	123.6	8.6	123.9
5	Max Mxy	STR 1/ 47	-965.2	0.0	-32.4	0.0	236.2	0.3	236.2	0.3	236.2
	Max Mxz	STR 3/ 130	-415.8	-23.5	-13.9	53.5	71.0	-284.1	88.9	289.1	292.8
Member	Max Myz	STR 3/ 60	-677.2	-23.5	-32.7	53.5	197.8	-284.1	204.9	289.1	346.1
708	Min Fx	STR 1/ 47	-965.2	0.0	-32.4	0.0	236.2	0.3	236.2	0.3	236.2
	Min Fy	STR 3/ 10	-628.9	-23.5	-23.0	53.5	137.7	-284.1	147.7	289.1	315.7
Joint	Min Fz	STR 3/ 60	-677.2	-23.5	-32.7	53.5	197.8	-284.1	204.9	289.1	346.1
705	Min Mx	STR 1/ 9	-659.7	0.9	-16.7	-1.1	123.6	8.5	123.6	8.6	123.9
	Min My	STR 1/ 166	-435.2	0.0	-0.5	0.0	40.6	0.1	40.6	0.1	40.6
	Min Mz	STR 3/ 130	-415.8	-23.5	-13.9	53.5	71.0	-284.1	88.9	289.1	292.8
	Min Mxy	STR 1/ 166	-435.2	0.0	-0.5	0.0	40.6	0.1	40.6	0.1	40.6
	Min Mxz	STR 1/ 3	-646.4	0.0	-15.8	0.0	117.5	-0.1	117.5	0.1	117.5
	Min Myz	STR 1/ 166	-435.2	0.0	-0.5	0.0	40.6	0.1	40.6	0.1	40.6
	Max Fx	STR 1/ 47	972.1	0.0	34.5	0.0	130.6	0.0	130.6	0.0	130.6
	Max Fy	STR 3/ 10	635.8	21.7	25.2	-53.5	126.7	36.5	137.6	64.8	131.9
	Max Fz	STR 3/ 60	684.1	21.7	34.9	-53.5	172.4	36.5	180.5	64.8	176.2
	Max Mx	STR 1/ 9	666.6	-0.9	18.8	1.1	72.0	1.2	72.0	1.6	72.0
	Max My	STR 3/ 60	684.1	21.7	34.9	-53.5	172.4	36.5	180.5	64.8	176.2
Load No.	Max Mz	STR 3/ 10	635.8	21.7	25.2	-53.5	126.7	36.5	137.6	64.8	131.9
6	Max Mxy	STR 3/ 60	684.1	21.7	34.9	-53.5	172.4	36.5	180.5	64.8	176.2
	Max Mxz	STR 3/ 10	635.8	21.7	25.2	-53.5	126.7	36.5	137.6	64.8	131.9
Member	Max Myz	STR 3/ 60	684.1	21.7	34.9	-53.5	172.4	36.5	180.5	64.8	176.2
708	Min Fx	STR 3/ 190	391.9	21.7	15.0	-53.5	89.7	36.5	104.4	64.8	96.9
	Min Fy	STR 1/ 9	666.6	-0.9	18.8	1.1	72.0	1.2	72.0	1.6	72.0
Joint	Min Fz	STR 1/ 166	440.2	0.0	2.0	0.0	-26.8	0.0	26.8	0.0	26.8
706	Min Mx	STR 3/ 10	635.8	21.7	25.2	-53.5	126.7	36.5	137.6	64.8	131.9
	Min My	STR 1/ 166	440.2	0.0	2.0	0.0	-26.8	0.0	26.8	0.0	26.8
	Min Mz	STR 1/ 8	801.9	7.0	22.3	-5.1	80.3	-48.3	80.4	48.6	93.7
	Min Mxy	STR 1/ 193	443.1	0.0	7.5	0.0	2.4	0.0	2.4	0.0	2.4
	Min Mxz	STR 1/ 1	897.4	0.0	23.0	0.0	78.5	0.0	78.5	0.0	78.5
	Min Myz	STR 1/ 193	443.1	0.0	7.5	0.0	2.4	0.0	2.4	0.0	2.4

	Combinded Results										
	Max/ Min ID	**Combo ID**	**Fx (kips)**	**Fy (kips)**	**Fz (kips)**	**Mx (ft*kip)**	**My (ft*kip)**	**Mz (ft*kip)**	**Mxy (ft*kip)**	**Mxz (ft*kip)**	**Myz (ft*kip)**
	Max Fx	STR 1/ 47	976.0	0.0	3.6	0.0	91.8	0.1	91.8	0.1	91.8
	Max Fy	STR 1/ 9	644.8	0.2	4.7	-1.1	60.7	1.9	60.7	2.1	60.7
	Max Fz	STR 3/ 65	605.5	-1.5	5.3	16.8	58.0	-20.9	60.4	26.8	61.6
	Max Mx	STR 3/ 10	651.8	-4.9	5.1	44.2	55.4	-58.7	70.9	73.5	80.7
	Max My	STR 1/ 47	976.0	0.0	3.6	0.0	91.8	0.1	91.8	0.1	91.8
Load No.	Max Mz	STR 1/ 9	644.8	0.2	4.7	-1.1	60.7	1.9	60.7	2.1	60.7
7	Max Mxy	STR 1/ 47	976.0	0.0	3.6	0.0	91.8	0.1	91.8	0.1	91.8
	Max Mxz	STR 3/ 130	395.5	-4.9	3.8	44.2	42.2	-58.7	61.2	73.5	72.3
Member	Max Myz	STR 3/ 51	812.5	-4.3	4.1	38.4	76.4	-52.0	85.5	64.6	92.4
711	Min Fx	STR 1/ 165	346.0	0.0	3.5	0.0	44.8	0.1	44.8	0.1	44.8
	Min Fy	STR 3/ 10	651.8	-4.9	5.1	44.2	55.4	-58.7	70.9	73.5	80.7
Joint	Min Fz	STR 3/ 179	609.8	-1.5	2.3	16.8	65.2	-20.9	67.3	26.8	68.5
707	Min Mx	STR 1/ 7	726.6	-0.9	4.5	-10.9	68.4	0.5	69.2	10.9	68.4
	Min My	STR 3/ 190	381.3	-4.9	3.9	44.2	40.4	-58.7	59.9	73.5	71.3
	Min Mz	STR 3/ 130	395.5	-4.9	3.8	44.2	42.2	-58.7	61.2	73.5	72.3
	Min Mxy	STR 1/ 165	346.0	0.0	3.5	0.0	44.8	0.1	44.8	0.1	44.8
	Min Mxz	STR 1/ 55	523.7	0.0	3.0	0.0	61.8	0.1	61.8	0.1	61.8
	Min Myz	STR 1/ 165	346.0	0.0	3.5	0.0	44.8	0.1	44.8	0.1	44.8
	Max Fx	STR 1/ 165	-340.4	0.0	7.8	0.0	11.5	0.0	11.5	0.0	11.5
	Max Fy	STR 1/ 8	-747.0	1.1	11.1	9.8	20.6	-26.4	22.8	28.2	33.5
	Max Fz	STR 3/ 55	-753.8	0.1	12.3	-16.8	26.2	-1.1	31.1	16.8	26.2
	Max Mx	STR 1/ 7	-718.7	0.9	11.1	10.9	20.7	-25.6	23.4	27.8	32.9
	Max My	STR 1/ 112	-652.9	0.0	11.2	0.0	28.5	0.0	28.5	0.0	28.5
Load No.	Max Mz	STR 1/ 9	-637.0	-0.2	11.0	1.1	21.8	0.7	21.8	1.3	21.8
8	Max Mxy	STR 3/ 70	-629.7	0.4	10.4	-44.2	16.8	-13.2	47.3	46.2	21.4
	Max Mxz	STR 3/ 10	-643.9	0.4	10.5	-44.2	16.6	-13.2	47.2	46.2	21.2
Member	Max Myz	STR 1/ 116	-732.8	1.1	11.0	9.8	20.8	-26.4	23.0	28.2	33.6
711	Min Fx	STR 1/ 47	-968.1	0.0	12.0	0.0	17.9	0.0	17.9	0.0	17.9
	Min Fy	STR 1/ 9	-637.0	-0.2	11.0	1.1	21.8	0.7	21.8	1.3	21.8
Joint	Min Fz	STR 3/ 189	-447.9	0.1	6.9	-16.8	5.0	-1.1	17.5	16.8	5.1
708	Min Mx	STR 3/ 10	-643.9	0.4	10.5	-44.2	16.6	-13.2	47.2	46.2	21.2
	Min My	STR 3/ 159	-496.8	0.1	7.3	-16.8	3.1	-1.1	17.1	16.8	3.3
	Min Mz	STR 1/ 8	-747.0	1.1	11.1	9.8	20.6	-26.4	22.8	28.2	33.5
	Min Mxy	STR 1/ 83	-609.4	0.0	8.7	0.0	7.2	0.0	7.2	0.0	7.2
	Min Mxz	STR 1/ 1	-772.1	0.0	11.3	0.0	19.9	0.0	19.9	0.0	19.9
	Min Myz	STR 3/ 159	-496.8	0.1	7.3	-16.8	3.1	-1.1	17.1	16.8	3.3

	Combinded Results										
	Max/ Min ID	**Combo ID**	**Fx (kips)**	**Fy (kips)**	**Fz (kips)**	**Mx (ft*kip)**	**My (ft*kip)**	**Mz (ft*kip)**	**Mxy (ft*kip)**	**Mxz (ft*kip)**	**Myz (ft*kip)**
	Max Fx	STR 3/ 215	-60.5	-3.1	13.5	3.8	-94.3	-57.7	94.4	57.8	110.5
	Max Fy	STR 1/ 7	-243.8	12.3	5.8	7.2	-53.5	153.8	54.0	154.0	162.9
	Max Fz	STR 1/ 84	-77.0	0.0	13.5	0.0	-95.5	0.0	95.5	0.0	95.5
	Max Mx	STR 3/ 10	-187.2	-2.5	6.5	16.1	-52.3	-98.3	54.7	99.6	111.3
	Max My	STR 3/ 89	-215.4	-3.1	2.1	3.8	-31.6	-57.5	31.8	57.7	65.6
Load No.	Max Mz	STR 1/ 7	-243.8	12.3	5.8	7.2	-53.5	153.8	54.0	154.0	162.9
9	Max Mxy	STR 1/ 84	-77.0	0.0	13.5	0.0	-95.5	0.0	95.5	0.0	95.5
	Max Mxz	STR 1/ 7	-243.8	12.3	5.8	7.2	-53.5	153.8	54.0	154.0	162.9
Member	Max Myz	STR 1/ 88	-136.3	12.3	12.1	7.2	-87.6	153.8	87.9	154.0	177.0
714	Min Fx	STR 1/ 11	-311.2	0.0	2.9	0.0	-37.3	0.0	37.3	0.0	37.3
	Min Fy	STR 3/ 1	-200.4	-8.7	5.6	10.1	-51.7	-137.2	52.7	137.6	146.6
Joint	Min Fz	STR 3/ 29	-227.0	-3.1	2.1	3.8	-32.0	-57.5	32.2	57.7	65.8
709	Min Mx	STR 1/ 9	-192.3	0.7	6.3	-0.4	-56.5	6.8	56.5	6.8	56.9
	Min My	STR 1/ 84	-77.0	0.0	13.5	0.0	-95.5	0.0	95.5	0.0	95.5
	Min Mz	STR 3/ 1	-200.4	-8.7	5.6	10.1	-51.7	-137.2	52.7	137.6	146.6
	Min Mxy	STR 3/ 89	-215.4	-3.1	2.1	3.8	-31.6	-57.5	31.8	57.7	65.6
	Min Mxz	STR 1/ 1	-287.2	0.0	6.0	0.0	-55.2	0.0	55.2	0.0	55.2
	Min Myz	STR 1/ 128	-297.4	0.0	2.4	0.0	-34.3	0.0	34.3	0.0	34.3
	Max Fx	STR 1/ 11	318.9	0.0	-2.8	0.0	3.0	0.0	3.0	0.0	3.0
	Max Fy	STR 3/ 1	208.1	6.7	-5.5	-10.1	-15.0	46.5	18.1	47.6	48.8
	Max Fz	STR 1/ 20	316.8	0.0	-2.3	0.0	6.5	0.0	6.5	0.0	6.5
	Max Mx	STR 1/ 9	200.1	-0.7	-6.2	0.4	-19.4	1.1	19.4	1.1	19.4
	Max My	STR 1/ 23	211.6	0.0	-2.3	0.0	9.7	0.0	9.7	0.0	9.7
Load No.	Max Mz	STR 3/ 10	194.9	0.6	-6.3	-16.1	-23.8	79.9	28.8	81.5	83.4
10	Max Mxy	STR 3/ 160	85.4	0.6	-12.7	-16.1	-64.7	79.9	66.6	81.5	102.8
	Max Mxz	STR 3/ 10	194.9	0.6	-6.3	-16.1	-23.8	79.9	28.8	81.5	83.4
Member	Max Myz	STR 3/ 160	85.4	0.6	-12.7	-16.1	-64.7	79.9	66.6	81.5	102.8
714	Min Fx	STR 3/ 215	66.1	2.5	-12.0	-3.8	-56.8	24.8	56.9	25.1	62.0
	Min Fy	STR 1/ 7	251.5	-12.3	-5.7	-7.2	-15.0	-9.3	16.7	11.7	17.7
Joint	Min Fz	STR 1/ 84	82.6	0.0	-13.4	0.0	-64.6	0.0	64.6	0.0	64.6
710	Min Mx	STR 3/ 10	194.9	0.6	-6.3	-16.1	-23.8	79.9	28.8	81.5	83.4
	Min My	STR 3/ 160	85.4	0.6	-12.7	-16.1	-64.7	79.9	66.6	81.5	102.8
	Min Mz	STR 1/ 8	259.6	-11.6	-4.8	-7.4	-10.7	-10.3	12.9	12.7	14.8
	Min Mxy	STR 1/ 38	296.6	0.0	-3.5	0.0	-0.4	0.0	0.4	0.0	0.4
	Min Mxz	STR 1/ 1	294.9	0.0	-5.9	0.0	-15.0	0.0	15.0	0.0	15.0
	Min Myz	STR 1/ 38	296.6	0.0	-3.5	0.0	-0.4	0.0	0.4	0.0	0.4

	Combinded Results										
	Max/ Min ID	**Combo ID**	**Fx (kips)**	**Fy (kips)**	**Fz (kips)**	**Mx (ft*kip)**	**My (ft*kip)**	**Mz (ft*kip)**	**Mxy (ft*kip)**	**Mxz (ft*kip)**	**Myz (ft*kip)**
	Max Fx	STR 3/ 79	-175.1	-1.1	2.9	10.8	57.6	-13.2	58.6	17.0	59.1
	Max Fy	STR 1/ 7	-315.3	1.4	3.3	-33.3	60.4	46.9	69.0	57.5	76.5
	Max Fz	STR 3/ 65	-277.5	-1.1	4.1	10.8	51.2	-13.2	52.3	17.0	52.9
	Max Mx	STR 3/ 1	-251.8	-3.4	3.5	22.7	54.8	-30.5	59.3	38.0	62.7
	Max My	STR 1/ 47	-381.6	0.0	2.9	0.0	71.4	0.0	71.4	0.0	71.4
Load No.	Max Mz	STR 1/ 7	-315.3	1.4	3.3	-33.3	60.4	46.9	69.0	57.5	76.5
11	Max Mxy	STR 1/ 53	-334.9	1.2	3.2	-32.6	64.9	45.3	72.6	55.8	79.2
	Max Mxz	STR 1/ 7	-315.3	1.4	3.3	-33.3	60.4	46.9	69.0	57.5	76.5
Member	Max Myz	STR 1/ 52	-351.5	1.4	3.2	-33.3	63.9	46.9	72.0	57.5	79.2
717	Min Fx	STR 1/ 82	-438.4	0.0	1.9	0.0	55.5	0.0	55.5	0.0	55.5
	Min Fy	STR 3/ 1	-251.8	-3.4	3.5	22.7	54.8	-30.5	59.3	38.0	62.7
Joint	Min Fz	STR 3/ 139	-201.7	-1.1	1.6	10.8	48.2	-13.2	49.4	17.0	49.9
711	Min Mx	STR 1/ 7	-315.3	1.4	3.3	-33.3	60.4	46.9	69.0	57.5	76.5
	Min My	STR 3/ 185	-287.3	-1.1	2.9	10.8	40.2	-13.2	41.7	17.0	42.3
	Min Mz	STR 3/ 1	-251.8	-3.4	3.5	22.7	54.8	-30.5	59.3	38.0	62.7
	Min Mxy	STR 1/ 165	-278.0	0.0	2.3	0.0	40.4	0.0	40.4	0.0	40.4
	Min Mxz	STR 1/ 1	-378.7	0.0	3.1	0.0	66.0	0.0	66.0	0.0	66.0
	Min Myz	STR 1/ 165	-278.0	0.0	2.3	0.0	40.4	0.0	40.4	0.0	40.4
	Max Fx	STR 1/ 82	444.1	0.0	7.8	0.0	16.1	0.0	16.1	0.0	16.1
	Max Fy	STR 1/ 1	386.6	0.0	10.4	0.0	21.4	0.0	21.4	0.0	21.4
	Max Fz	STR 3/ 15	282.6	-0.1	11.0	-10.8	28.0	-0.1	30.0	10.8	28.0
	Max Mx	STR 1/ 7	323.2	-1.4	10.2	33.3	22.3	-15.6	40.0	36.7	27.2
	Max My	STR 3/ 65	283.0	-0.1	10.8	-10.8	29.1	-0.1	31.1	10.8	29.1
Load No.	Max Mz	STR 1/ 9	276.3	-0.2	10.0	0.7	23.5	1.4	23.5	1.6	23.5
12	Max Mxy	STR 1/ 115	306.4	-1.4	10.1	33.3	22.5	-15.6	40.2	36.7	27.4
	Max Mxz	STR 1/ 7	323.2	-1.4	10.2	33.3	22.3	-15.6	40.0	36.7	27.2
Member	Max Myz	STR 3/ 65	283.0	-0.1	10.8	-10.8	29.1	-0.1	31.1	10.8	29.1
717	Min Fx	STR 3/ 79	185.4	-0.1	9.2	-10.8	16.8	0.0	19.9	10.8	16.8
	Min Fy	STR 1/ 7	323.2	-1.4	10.2	33.3	22.3	-15.6	40.0	36.7	27.2
Joint	Min Fz	STR 3/ 189	210.2	-0.1	6.5	-10.8	12.8	0.0	16.8	10.8	12.8
712	Min Mx	STR 3/ 1	259.7	-0.6	10.0	-22.7	23.2	-3.1	32.4	22.9	23.4
	Min My	STR 3/ 179	263.2	-0.1	6.7	-10.8	10.9	0.0	15.4	10.8	10.9
	Min Mz	STR 1/ 8	306.6	-1.2	10.2	32.6	21.9	-17.0	39.2	36.7	27.7
	Min Mxy	STR 1/ 101	397.0	0.0	8.1	0.0	14.0	0.0	14.0	0.0	14.0
	Min Mxz	STR 1/ 1	386.6	0.0	10.4	0.0	21.4	0.0	21.4	0.0	21.4
	Min Myz	STR 3/ 179	263.2	-0.1	6.7	-10.8	10.9	0.0	15.4	10.8	10.9

	Combinded Results										
	Max/ Min ID	**Combo ID**	**Fx (kips)**	**Fy (kips)**	**Fz (kips)**	**Mx (ft*kip)**	**My (ft*kip)**	**Mz (ft*kip)**	**Mxy (ft*kip)**	**Mxz (ft*kip)**	**Myz (ft*kip)**
	Max Fx	STR 3/ 55	309.0	1.3	-26.7	-4.3	200.5	33.9	200.6	34.2	203.4
	Max Fy	STR 3/ 1	228.5	3.6	-25.0	-7.3	189.2	75.9	189.3	76.2	203.8
	Max Fz	STR 3/ 190	181.0	-5.0	-20.4	3.2	152.5	6.9	152.5	7.6	152.6
	Max Mx	STR 1/ 7	234.8	-16.6	-27.8	35.7	208.8	-195.7	211.8	198.9	286.1
	Max My	STR 1/ 46	304.0	0.0	-31.6	0.0	237.3	0.0	237.3	0.0	237.3
Load No.	Max Mz	STR 3/ 1	228.5	3.6	-25.0	-7.3	189.2	75.9	189.3	76.2	203.8
13	Max Mxy	STR 1/ 46	304.0	0.0	-31.6	0.0	237.3	0.0	237.3	0.0	237.3
	Max Mxz	STR 1/ 7	234.8	-16.6	-27.8	35.7	208.8	-195.7	211.8	198.9	286.1
Member	Max Myz	STR 1/ 52	297.6	-16.6	-28.8	35.7	217.9	-195.7	220.8	198.9	292.8
720	Min Fx	STR 3/ 189	178.9	1.3	-21.2	-4.3	160.9	33.9	160.9	34.2	164.4
	Min Fy	STR 1/ 7	234.8	-16.6	-27.8	35.7	208.8	-195.7	211.8	198.9	286.1
Joint	Min Fz	STR 1/ 46	304.0	0.0	-31.6	0.0	237.3	0.0	237.3	0.0	237.3
713	Min Mx	STR 3/ 1	228.5	3.6	-25.0	-7.3	189.2	75.9	189.3	76.2	203.8
	Min My	STR 3/ 190	181.0	-5.0	-20.4	3.2	152.5	6.9	152.5	7.6	152.6
	Min Mz	STR 1/ 7	234.8	-16.6	-27.8	35.7	208.8	-195.7	211.8	198.9	286.1
	Min Mxy	STR 3/ 190	181.0	-5.0	-20.4	3.2	152.5	6.9	152.5	7.6	152.6
	Min Mxz	STR 1/ 1	241.2	0.0	-30.6	0.0	228.2	0.0	228.2	0.0	228.2
	Min Myz	STR 3/ 190	181.0	-5.0	-20.4	3.2	152.5	6.9	152.5	7.6	152.6
	Max Fx	STR 3/ 189	-173.6	-0.6	24.9	4.3	146.1	-21.0	146.2	21.4	147.6
	Max Fy	STR 1/ 7	-226.6	16.6	30.9	-35.7	181.7	-26.1	185.1	44.2	183.5
	Max Fz	STR 1/ 46	-295.9	0.0	34.8	0.0	206.0	0.0	206.0	0.0	206.0
	Max Mx	STR 3/ 1	-220.3	-1.4	28.1	7.3	163.3	-42.1	163.4	42.8	168.6
	Max My	STR 1/ 46	-295.9	0.0	34.8	0.0	206.0	0.0	206.0	0.0	206.0
Load No.	Max Mz	STR 1/ 1	-233.1	0.0	33.7	0.0	199.9	0.0	199.9	0.0	199.9
14	Max Mxy	STR 1/ 46	-295.9	0.0	34.8	0.0	206.0	0.0	206.0	0.0	206.0
	Max Mxz	STR 3/ 10	-204.6	7.3	26.6	-3.2	152.5	-88.5	152.5	88.5	176.3
Member	Max Myz	STR 1/ 46	-295.9	0.0	34.8	0.0	206.0	0.0	206.0	0.0	206.0
720	Min Fx	STR 3/ 55	-300.3	-0.6	28.5	4.3	166.6	-21.0	166.6	21.4	167.9
	Min Fy	STR 3/ 1	-220.3	-1.4	28.1	7.3	163.3	-42.1	163.4	42.8	168.6
Joint	Min Fz	STR 3/ 190	-175.1	7.3	22.6	-3.2	132.6	-88.5	132.6	88.5	159.4
714	Min Mx	STR 1/ 7	-226.6	16.6	30.9	-35.7	181.7	-26.1	185.1	44.2	183.5
	Min My	STR 3/ 200	-190.0	7.3	22.6	-3.2	132.5	-88.5	132.5	88.5	159.3
	Min Mz	STR 3/ 10	-204.6	7.3	26.6	-3.2	152.5	-88.5	152.5	88.5	176.3
	Min Mxy	STR 3/ 200	-190.0	7.3	22.6	-3.2	132.5	-88.5	132.5	88.5	159.3
	Min Mxz	STR 1/ 1	-233.1	0.0	33.7	0.0	199.9	0.0	199.9	0.0	199.9
	Min Myz	STR 3/ 195	-222.9	-0.6	23.5	4.3	140.4	-21.0	140.5	21.4	142.0

	Combinded Results										
	Max/ Min ID	**Combo ID**	**Fx (kips)**	**Fy (kips)**	**Fz (kips)**	**Mx (ft*kip)**	**My (ft*kip)**	**Mz (ft*kip)**	**Mxy (ft*kip)**	**Mxz (ft*kip)**	**Myz (ft*kip)**
	Max Fx	STR 3/ 190	-654.5	-0.1	-0.5	7.8	41.9	20.2	42.6	21.6	46.5
	Max Fy	STR 1/ 7	-1123.8	5.1	-0.7	-41.0	60.6	98.0	73.1	106.2	115.2
	Max Fz	STR 3/ 94	-1011.8	-1.7	0.5	11.8	50.5	-13.3	51.8	17.8	52.2
	Max Mx	STR 3/ 1	-975.4	-2.7	-0.4	16.5	55.7	-19.0	58.1	25.2	58.9
	Max My	STR 1/ 11	-1292.7	0.0	-1.4	0.0	69.3	0.0	69.3	0.0	69.3
Load No.	Max Mz	STR 1/ 7	-1123.8	5.1	-0.7	-41.0	60.6	98.0	73.1	106.2	115.2
15	Max Mxy	STR 1/ 17	-1148.0	4.7	-0.9	-40.6	63.7	96.1	75.5	104.3	115.3
	Max Mxz	STR 1/ 7	-1123.8	5.1	-0.7	-41.0	60.6	98.0	73.1	106.2	115.2
Member	Max Myz	STR 1/ 16	-1151.5	5.1	-0.9	-41.0	63.0	98.0	75.1	106.2	116.5
723	Min Fx	STR 1/ 46	-1373.8	0.0	-1.0	0.0	64.4	0.0	64.4	0.0	64.4
	Min Fy	STR 3/ 1	-975.4	-2.7	-0.4	16.5	55.7	-19.0	58.1	25.2	58.9
Joint	Min Fz	STR 1/ 65	-1087.2	0.0	-1.8	0.0	59.0	0.0	59.0	0.0	59.0
715	Min Mx	STR 1/ 7	-1123.8	5.1	-0.7	-41.0	60.6	98.0	73.1	106.2	115.2
	Min My	STR 3/ 220	-704.4	-0.1	-0.2	7.8	38.5	20.2	39.3	21.6	43.5
	Min Mz	STR 3/ 1	-975.4	-2.7	-0.4	16.5	55.7	-19.0	58.1	25.2	58.9
	Min Mxy	STR 3/ 220	-704.4	-0.1	-0.2	7.8	38.5	20.2	39.3	21.6	43.5
	Min Mxz	STR 1/ 1	-1272.2	0.0	-1.1	0.0	65.5	0.0	65.5	0.0	65.5
	Min Myz	STR 1/ 192	-787.4	0.0	-0.4	0.0	39.3	0.0	39.3	0.0	39.3
	Max Fx	STR 1/ 46	1381.8	0.0	11.5	0.0	62.7	0.0	62.7	0.0	62.7
	Max Fy	STR 1/ 1	1280.2	0.0	11.6	0.0	63.8	0.0	63.8	0.0	63.8
	Max Fz	STR 3/ 15	1040.6	-0.1	12.0	-8.4	65.1	1.4	65.6	8.5	65.1
	Max Mx	STR 1/ 7	1131.8	-5.1	11.2	41.0	61.2	3.7	73.6	41.1	61.3
	Max My	STR 3/ 25	1064.6	-0.1	12.0	-8.4	65.3	1.4	65.8	8.5	65.3
Load No.	Max Mz	STR 3/ 10	907.3	-3.2	10.7	-7.8	57.6	11.9	58.1	14.3	58.8
16	Max Mxy	STR 1/ 25	1183.5	-5.1	11.4	41.0	62.6	3.7	74.8	41.1	62.7
	Max Mxz	STR 1/ 7	1131.8	-5.1	11.2	41.0	61.2	3.7	73.6	41.1	61.3
Member	Max Myz	STR 3/ 25	1064.6	-0.1	12.0	-8.4	65.3	1.4	65.8	8.5	65.3
723	Min Fx	STR 3/ 190	660.3	-3.2	8.1	-7.8	45.8	11.9	46.5	14.3	47.3
	Min Fy	STR 1/ 7	1131.8	-5.1	11.2	41.0	61.2	3.7	73.6	41.1	61.3
Joint	Min Fz	STR 3/ 219	756.7	-0.1	7.0	-8.4	39.3	1.4	40.2	8.5	39.3
716	Min Mx	STR 3/ 1	983.4	-0.7	10.9	-16.5	58.7	-0.1	61.0	16.5	58.7
	Min My	STR 3/ 219	756.7	-0.1	7.0	-8.4	39.3	1.4	40.2	8.5	39.3
	Min Mz	STR 3/ 1	983.4	-0.7	10.9	-16.5	58.7	-0.1	61.0	16.5	58.7
	Min Mxy	STR 3/ 219	756.7	-0.1	7.0	-8.4	39.3	1.4	40.2	8.5	39.3
	Min Mxz	STR 1/ 1	1280.2	0.0	11.6	0.0	63.8	0.0	63.8	0.0	63.8
	Min Myz	STR 3/ 219	756.7	-0.1	7.0	-8.4	39.3	1.4	40.2	8.5	39.3

	Combinded Results										
	Max/ Min ID	**Combo ID**	**Fx (kips)**	**Fy (kips)**	**Fz (kips)**	**Mx (ft*kip)**	**My (ft*kip)**	**Mz (ft*kip)**	**Mxy (ft*kip)**	**Mxz (ft*kip)**	**Myz (ft*kip)**
	Max Fx	STR 1/ 47	1118.0	0.0	-19.2	0.0	233.5	0.0	233.5	0.0	233.5
	Max Fy	STR 3/ 1	861.0	2.2	-14.4	-16.2	183.2	47.2	183.9	49.9	189.2
	Max Fz	STR 3/ 189	611.3	0.8	-10.5	-8.5	132.7	21.6	133.0	23.2	134.4
	Max Mx	STR 1/ 7	932.1	-8.2	-16.3	37.1	201.4	-100.8	204.8	107.4	225.2
	Max My	STR 1/ 20	1108.7	0.0	-19.2	0.0	235.9	0.0	235.9	0.0	235.9
Load No.	Max Mz	STR 3/ 1	861.0	2.2	-14.4	-16.2	183.2	47.2	183.9	49.9	189.2
17	Max Mxy	STR 1/ 20	1108.7	0.0	-19.2	0.0	235.9	0.0	235.9	0.0	235.9
	Max Mxz	STR 1/ 7	932.1	-8.2	-16.3	37.1	201.4	-100.8	204.8	107.4	225.2
Member	Max Myz	STR 1/ 25	1022.6	-8.2	-17.4	37.1	215.9	-100.8	219.1	107.4	238.3
726	Min Fx	STR 3/ 190	582.3	-2.7	-10.6	-8.5	129.9	7.4	130.2	11.3	130.1
	Min Fy	STR 1/ 7	932.1	-8.2	-16.3	37.1	201.4	-100.8	204.8	107.4	225.2
Joint	Min Fz	STR 1/ 19	1093.6	0.0	-19.2	0.0	234.1	0.0	234.1	0.0	234.1
717	Min Mx	STR 3/ 1	861.0	2.2	-14.4	-16.2	183.2	47.2	183.9	49.9	189.2
	Min My	STR 3/ 220	591.6	-2.7	-10.6	-8.5	127.5	7.4	127.8	11.3	127.7
	Min Mz	STR 1/ 7	932.1	-8.2	-16.3	37.1	201.4	-100.8	204.8	107.4	225.2
	Min Mxy	STR 3/ 220	591.6	-2.7	-10.6	-8.5	127.5	7.4	127.8	11.3	127.7
	Min Mxz	STR 1/ 1	1003.1	0.0	-18.1	0.0	219.6	0.0	219.6	0.0	219.6
	Min Myz	STR 3/ 220	591.6	-2.7	-10.6	-8.5	127.5	7.4	127.8	11.3	127.7
	Max Fx	STR 3/ 190	-576.5	5.5	15.9	8.5	91.1	-74.6	91.5	75.1	117.8
	Max Fy	STR 1/ 7	-924.1	8.2	23.7	-37.1	129.8	-36.8	135.0	52.2	134.9
	Max Fz	STR 1/ 19	-1085.6	0.0	26.6	0.0	145.4	0.0	145.4	0.0	145.4
	Max Mx	STR 3/ 1	-853.0	0.6	21.8	16.2	117.4	-32.6	118.5	36.4	121.8
	Max My	STR 1/ 46	-1094.9	0.0	26.6	0.0	147.2	0.0	147.2	0.0	147.2
Load No.	Max Mz	STR 1/ 1	-995.1	0.0	25.5	0.0	142.2	0.0	142.2	0.0	142.2
18	Max Mxy	STR 1/ 46	-1094.9	0.0	26.6	0.0	147.2	0.0	147.2	0.0	147.2
	Max Mxz	STR 3/ 10	-803.0	5.5	20.8	8.5	111.3	-74.6	111.7	75.1	134.0
Member	Max Myz	STR 1/ 46	-1094.9	0.0	26.6	0.0	147.2	0.0	147.2	0.0	147.2
726	Min Fx	STR 1/ 47	-1110.0	0.0	26.6	0.0	146.6	0.0	146.6	0.0	146.6
	Min Fy	STR 1/ 1	-995.1	0.0	25.5	0.0	142.2	0.0	142.2	0.0	142.2
Joint	Min Fz	STR 3/ 190	-576.5	5.5	15.9	8.5	91.1	-74.6	91.5	75.1	117.8
718	Min Mx	STR 1/ 7	-924.1	8.2	23.7	-37.1	129.8	-36.8	135.0	52.2	134.9
	Min My	STR 3/ 190	-576.5	5.5	15.9	8.5	91.1	-74.6	91.5	75.1	117.8
	Min Mz	STR 3/ 10	-803.0	5.5	20.8	8.5	111.3	-74.6	111.7	75.1	134.0
	Min Mxy	STR 3/ 190	-576.5	5.5	15.9	8.5	91.1	-74.6	91.5	75.1	117.8
	Min Mxz	STR 1/ 1	-995.1	0.0	25.5	0.0	142.2	0.0	142.2	0.0	142.2
	Min Myz	STR 1/ 168	-624.1	0.0	16.9	0.0	97.2	0.0	97.2	0.0	97.2

			Combinded Results								
	Max/ Min ID	Combo ID	Fx (kips)	Fy (kips)	Fz (kips)	Mx (ft*kip)	My (ft*kip)	Mz (ft*kip)	Mxy (ft*kip)	Mxz (ft*kip)	Myz (ft*kip)
	Max Fx	STR 3/ 190	-817.2	4.1	3.3	14.1	-29.4	40.3	32.6	42.7	49.9
	Max Fy	STR 1/ 7	-1432.3	11.0	9.3	-30.5	-81.8	147.9	87.3	151.0	169.0
	Max Fz	STR 1/ 20	-1697.1	0.0	12.5	0.0	-112.5	0.0	112.5	0.0	112.5
	Max Mx	STR 3/ 1	-1256.0	-1.7	8.6	19.7	-73.4	-22.5	76.0	30.0	76.8
	Max My	STR 3/ 219	-908.1	-0.7	2.5	9.9	-23.9	-12.3	25.9	15.8	26.9
Load No.	Max Mz	STR 1/ 7	-1432.3	11.0	9.3	-30.5	-81.8	147.9	87.3	151.0	169.0
19	Max Mxy	STR 1/ 20	-1697.1	0.0	12.5	0.0	-112.5	0.0	112.5	0.0	112.5
	Max Mxz	STR 1/ 7	-1432.3	11.0	9.3	-30.5	-81.8	147.9	87.3	151.0	169.0
Member	Max Myz	STR 1/ 25	-1507.1	11.0	11.3	-30.5	-102.1	147.9	106.6	151.0	179.7
729	Min Fx	STR 1/ 47	-1710.3	0.0	12.2	0.0	-110.6	0.0	110.6	0.0	110.6
	Min Fy	STR 3/ 1	-1256.0	-1.7	8.6	19.7	-73.4	-22.5	76.0	30.0	76.8
Joint	Min Fz	STR 3/ 219	-908.1	-0.7	2.5	9.9	-23.9	-12.3	25.9	15.8	26.9
719	Min Mx	STR 1/ 7	-1432.3	11.0	9.3	-30.5	-81.8	147.9	87.3	151.0	169.0
	Min My	STR 1/ 20	-1697.1	0.0	12.5	0.0	-112.5	0.0	112.5	0.0	112.5
	Min Mz	STR 3/ 1	-1256.0	-1.7	8.6	19.7	-73.4	-22.5	76.0	30.0	76.8
	Min Mxy	STR 3/ 219	-908.1	-0.7	2.5	9.9	-23.9	-12.3	25.9	15.8	26.9
	Min Mxz	STR 1/ 1	-1608.3	0.0	10.2	0.0	-90.0	0.0	90.0	0.0	90.0
	Min Myz	STR 3/ 219	-908.1	-0.7	2.5	9.9	-23.9	-12.3	25.9	15.8	26.9
	Max Fx	STR 1/ 47	1718.6	0.0	-5.7	0.0	-30.4	-0.1	30.4	0.1	30.4
	Max Fy	STR 1/ 1	1616.6	0.0	-3.7	0.0	-20.3	-0.1	20.3	0.1	20.3
	Max Fz	STR 3/ 220	836.4	-6.9	1.7	-14.1	15.7	46.1	21.2	48.2	48.7
	Max Mx	STR 1/ 7	1440.5	-11.0	-2.8	30.5	-16.1	27.2	34.4	40.8	31.6
	Max My	STR 3/ 220	836.4	-6.9	1.7	-14.1	15.7	46.1	21.2	48.2	48.7
Load No.	Max Mz	STR 3/ 130	869.9	-6.9	1.2	-14.1	11.7	46.1	18.4	48.2	47.6
20	Max Mxy	STR 1/ 26	1522.3	-10.5	-4.9	29.9	-28.0	21.2	41.0	36.7	35.1
	Max Mxz	STR 3/ 130	869.9	-6.9	1.2	-14.1	11.7	46.1	18.4	48.2	47.6
Member	Max Myz	STR 3/ 30	1251.9	-6.9	-3.4	-14.1	-18.8	46.1	23.5	48.2	49.8
729	Min Fx	STR 3/ 190	823.2	-6.9	1.4	-14.1	12.8	46.1	19.1	48.2	47.9
	Min Fy	STR 1/ 7	1440.5	-11.0	-2.8	30.5	-16.1	27.2	34.4	40.8	31.6
Joint	Min Fz	STR 1/ 20	1705.4	0.0	-6.0	0.0	-33.3	-0.1	33.3	0.1	33.3
720	Min Mx	STR 3/ 1	1264.3	-1.0	-2.1	-19.7	-12.0	15.8	23.1	25.3	19.9
	Min My	STR 1/ 20	1705.4	0.0	-6.0	0.0	-33.3	-0.1	33.3	0.1	33.3
	Min Mz	STR 1/ 1	1616.6	0.0	-3.7	0.0	-20.3	-0.1	20.3	0.1	20.3
	Min Mxy	STR 1/ 75	1018.0	0.0	-1.1	0.0	0.0	-0.1	0.0	0.1	0.1
	Min Mxz	STR 1/ 55	1309.4	0.0	-1.1	0.0	-0.3	-0.1	0.3	0.1	0.3
	Min Myz	STR 1/ 75	1018.0	0.0	-1.1	0.0	0.0	-0.1	0.0	0.1	0.1

			Combinded Results								
	Max/ Min ID	Combo ID	Fx (kips)	Fy (kips)	Fz (kips)	Mx (ft*kip)	My (ft*kip)	Mz (ft*kip)	Mxy (ft*kip)	Mxz (ft*kip)	Myz (ft*kip)
	Max Fx	STR 1/ 20	2341.2	0.0	11.3	0.0	-50.9	0.0	50.9	0.0	50.9
	Max Fy	STR 3/ 1	1725.3	2.8	9.3	-24.9	-33.9	42.7	42.1	49.4	54.5
	Max Fz	STR 3/ 25	2016.3	1.0	11.8	-11.9	-72.1	18.5	73.1	22.0	74.4
	Max Mx	STR 1/ 7	1881.4	0.4	9.5	1.6	-33.9	9.5	33.9	9.6	35.2
	Max My	STR 3/ 159	1123.3	1.0	4.5	-11.9	13.4	18.5	17.9	22.0	22.8
Load No.	Max Mz	STR 3/ 10	1633.6	2.2	9.1	-29.7	-32.5	45.5	44.0	54.3	55.9
21	Max Mxy	STR 3/ 25	2016.3	1.0	11.8	-11.9	-72.1	18.5	73.1	22.0	74.4
	Max Mxz	STR 3/ 10	1633.6	2.2	9.1	-29.7	-32.5	45.5	44.0	54.3	55.9
Member	Max Myz	STR 3/ 25	2016.3	1.0	11.8	-11.9	-72.1	18.5	73.1	22.0	74.4
732	Min Fx	STR 3/ 220	1015.2	2.2	5.2	-29.7	-5.9	45.5	30.3	54.3	45.9
	Min Fy	STR 1/ 1	2037.5	0.0	9.6	0.0	-33.9	0.0	33.9	0.0	33.9
Joint	Min Fz	STR 3/ 159	1123.3	1.0	4.5	-11.9	13.4	18.5	17.9	22.0	22.8
721	Min Mx	STR 3/ 10	1633.6	2.2	9.1	-29.7	-32.5	45.5	44.0	54.3	55.9
	Min My	STR 3/ 25	2016.3	1.0	11.8	-11.9	-72.1	18.5	73.1	22.0	74.4
	Min Mz	STR 1/ 9	1706.4	0.0	9.3	0.0	-34.1	-1.8	34.1	1.8	34.1
	Min Mxy	STR 1/ 83	1498.3	0.0	5.7	0.0	-6.8	0.0	6.8	0.0	6.8
	Min Mxz	STR 1/ 1	2037.5	0.0	9.6	0.0	-33.9	0.0	33.9	0.0	33.9
	Min Myz	STR 1/ 83	1498.3	0.0	5.7	0.0	-6.8	0.0	6.8	0.0	6.8
	Max Fx	STR 3/ 220	-1009.6	1.5	3.9	29.7	-8.7	-37.8	30.9	48.1	38.8
	Max Fy	STR 3/ 10	-1625.8	1.5	3.5	29.7	-32.5	-37.8	44.0	48.1	49.8
	Max Fz	STR 3/ 159	-1119.9	0.3	5.8	11.9	0.9	-9.9	11.9	15.5	10.0
	Max Mx	STR 3/ 10	-1625.8	1.5	3.5	29.7	-32.5	-37.8	44.0	48.1	49.8
	Max My	STR 3/ 219	-1078.5	0.3	5.8	11.9	1.8	-9.9	12.0	15.5	10.1
Load No.	Max Mz	STR 1/ 9	-1698.6	0.0	3.4	0.0	-34.4	1.2	34.4	1.2	34.4
22	Max Mxy	STR 3/ 25	-2006.3	0.3	-0.4	11.9	-67.6	-9.9	68.6	15.5	68.3
	Max Mxz	STR 3/ 10	-1625.8	1.5	3.5	29.7	-32.5	-37.8	44.0	48.1	49.8
Member	Max Myz	STR 3/ 25	-2006.3	0.3	-0.4	11.9	-67.6	-9.9	68.6	15.5	68.3
732	Min Fx	STR 1/ 20	-2333.5	0.0	1.4	0.0	-62.1	0.0	62.1	0.0	62.1
	Min Fy	STR 1/ 7	-1873.6	-0.4	3.2	-1.6	-38.0	-3.0	38.1	3.4	38.1
Joint	Min Fz	STR 3/ 25	-2006.3	0.3	-0.4	11.9	-67.6	-9.9	68.6	15.5	68.3
722	Min Mx	STR 1/ 7	-1873.6	-0.4	3.2	-1.6	-38.0	-3.0	38.1	3.4	38.1
	Min My	STR 3/ 25	-2006.3	0.3	-0.4	11.9	-67.6	-9.9	68.6	15.5	68.3
	Min Mz	STR 3/ 10	-1625.8	1.5	3.5	29.7	-32.5	-37.8	44.0	48.1	49.8
	Min Mxy	STR 1/ 192	-1063.5	0.0	3.7	0.0	-9.9	0.0	9.9	0.0	9.9
	Min Mxz	STR 1/ 1	-2029.7	0.0	3.0	0.0	-41.0	0.0	41.0	0.0	41.0
	Min Myz	STR 1/ 192	-1063.5	0.0	3.7	0.0	-9.9	0.0	9.9	0.0	9.9

AASHTO Limit State: STR 1 - STRENGTH I

Max/ Min ID	Load Num	Member Num	Joint Num	Limit State/ Combo ID	Fx (kips)	Fy (kips)	Fz (kips)	Mx (ft*kip)	My (ft*kip)	Mz (ft*kip)	Mxy (ft*kip)	Mxz (ft*kip)	Myz (ft*kip)
Max Fx	3	705	703	STR 1/ 47	3148.8	0.0	-0.1	-0.1	443.3	0.1	443.3	0.2	443.3
Max Fy	14	720	714	STR 1/ 7	-226.6	16.6	30.9	-35.7	181.7	-26.1	185.1	44.2	183.5
Max Fz	2	702	702	STR 1/ 82	-71.5	0.0	96.4	-0.1	624.9	-0.1	624.9	0.1	624.9
Max Mx	3	705	703	STR 1/ 62	1726.0	-5.6	1.1	60.5	258.5	-96.3	265.4	113.7	275.8
Max My	1	702	701	STR 1/ 28	102.5	0.0	-96.0	0.1	639.6	-0.3	639.6	0.3	639.6
Max Mz	9	714	709	STR 1/ 7	-243.8	12.3	5.8	7.2	-53.5	153.8	54.0	154.0	162.9
Max Mxy	1	702	701	STR 1/ 28	102.5	0.0	-96.0	0.1	639.6	-0.3	639.6	0.3	639.6
Max Mxz	13	720	713	STR 1/ 7	234.8	-16.6	-27.8	35.7	208.8	-195.7	211.8	198.9	286.1
Max Myz	1	702	701	STR 1/ 28	102.5	0.0	-96.0	0.1	639.6	-0.3	639.6	0.3	639.6
Min Fx	4	705	704	STR 1/ 47	-3136.9	0.0	26.3	0.1	-58.4	0.0	58.4	0.1	58.4
Min Fy	13	720	713	STR 1/ 7	234.8	-16.6	-27.8	35.7	208.8	-195.7	211.8	198.9	286.1
Min Fz	1	702	701	STR 1/ 82	80.8	0.0	-96.4	0.1	638.4	-0.2	638.4	0.2	638.4
Min Mx	4	705	704	STR 1/ 62	-1717.5	5.6	17.7	-60.5	-13.6	-67.7	62.0	90.8	69.1
Min My	4	705	704	STR 1/ 50	-2606.2	0.0	18.4	0.1	-133.5	0.0	133.5	0.1	133.5
Min Mz	13	720	713	STR 1/ 7	234.8	-16.6	-27.8	35.7	208.8	-195.7	211.8	198.9	286.1
Min Mxy	20	729	720	STR 1/ 75	1018.0	0.0	-1.1	0.0	0.0	-0.1	0.0	0.1	0.1
Min Mxz	6	708	706	STR 1/ 1	897.4	0.0	23.0	0.0	78.5	0.0	78.5	0.0	78.5
Min Myz	20	729	720	STR 1/ 75	1018.0	0.0	-1.1	0.0	0.0	-0.1	0.0	0.1	0.1

AASHTO Limit State: STR 1 - STRENGTH I

Load No. / Member / Joint	Max/ Min ID	Combo ID	Fx (kips)	Fy (kips)	Fz (kips)	Mx (ft*kip)	My (ft*kip)	Mz (ft*kip)	Mxy (ft*kip)	Mxz (ft*kip)	Myz (ft*kip)
1 / 702 / 701	Max Fx	STR 1/ 28	102.5	0.0	-96.0	0.1	639.6	-0.3	639.6	0.3	639.6
	Max Fy	STR 1/ 1	97.6	0.0	-71.2	0.1	388.0	-0.3	388.0	0.3	388.0
	Max Fz	STR 1/ 1	97.6	0.0	-71.2	0.1	388.0	-0.3	388.0	0.3	388.0
	Max Mx	STR 1/ 1	97.6	0.0	-71.2	0.1	388.0	-0.3	388.0	0.3	388.0
	Max My	STR 1/ 28	102.5	0.0	-96.0	0.1	639.6	-0.3	639.6	0.3	639.6
	Max Mz	STR 1/ 55	75.9	0.0	-71.6	0.1	386.8	-0.2	386.8	0.2	386.8
	Max Mxy	STR 1/ 28	102.5	0.0	-96.0	0.1	639.6	-0.3	639.6	0.3	639.6
	Max Mxz	STR 1/ 1	97.6	0.0	-71.2	0.1	388.0	-0.3	388.0	0.3	388.0
	Max Myz	STR 1/ 28	102.5	0.0	-96.0	0.1	639.6	-0.3	639.6	0.3	639.6
	Min Fx	STR 1/ 55	75.9	0.0	-71.6	0.1	386.8	-0.2	386.8	0.2	386.8
	Min Fy	STR 1/ 1	97.6	0.0	-71.2	0.1	388.0	-0.3	388.0	0.3	388.0
	Min Fz	STR 1/ 82	80.8	0.0	-96.4	0.1	638.4	-0.2	638.4	0.2	638.4
	Min Mx	STR 1/ 55	75.9	0.0	-71.6	0.1	386.8	-0.2	386.8	0.2	386.8
	Min My	STR 1/ 55	75.9	0.0	-71.6	0.1	386.8	-0.2	386.8	0.2	386.8
	Min Mz	STR 1/ 1	97.6	0.0	-71.2	0.1	388.0	-0.3	388.0	0.3	388.0
	Min Mxy	STR 1/ 55	75.9	0.0	-71.6	0.1	386.8	-0.2	386.8	0.2	386.8
	Min Mxz	STR 1/ 55	75.9	0.0	-71.6	0.1	386.8	-0.2	386.8	0.2	386.8
	Min Myz	STR 1/ 55	75.9	0.0	-71.6	0.1	386.8	-0.2	386.8	0.2	386.8
2 / 702 / 702	Max Fx	STR 1/ 55	-66.6	0.0	71.6	-0.1	551.7	-0.1	551.7	0.1	551.7
	Max Fy	STR 1/ 1	-84.7	0.0	71.2	-0.1	544.1	-0.1	544.1	0.2	544.1
	Max Fz	STR 1/ 82	-71.5	0.0	96.4	-0.1	624.9	-0.1	624.9	0.1	624.9
	Max Mx	STR 1/ 55	-66.6	0.0	71.6	-0.1	551.7	-0.1	551.7	0.1	551.7
	Max My	STR 1/ 82	-71.5	0.0	96.4	-0.1	624.9	-0.1	624.9	0.1	624.9
	Max Mz	STR 1/ 55	-66.6	0.0	71.6	-0.1	551.7	-0.1	551.7	0.1	551.7
	Max Mxy	STR 1/ 82	-71.5	0.0	96.4	-0.1	624.9	-0.1	624.9	0.1	624.9
	Max Mxz	STR 1/ 1	-84.7	0.0	71.2	-0.1	544.1	-0.1	544.1	0.2	544.1
	Max Myz	STR 1/ 82	-71.5	0.0	96.4	-0.1	624.9	-0.1	624.9	0.1	624.9
	Min Fx	STR 1/ 28	-89.6	0.0	96.0	-0.1	617.3	-0.1	617.3	0.2	617.3
	Min Fy	STR 1/ 1	-84.7	0.0	71.2	-0.1	544.1	-0.1	544.1	0.2	544.1
	Min Fz	STR 1/ 1	-84.7	0.0	71.2	-0.1	544.1	-0.1	544.1	0.2	544.1
	Min Mx	STR 1/ 1	-84.7	0.0	71.2	-0.1	544.1	-0.1	544.1	0.2	544.1
	Min My	STR 1/ 1	-84.7	0.0	71.2	-0.1	544.1	-0.1	544.1	0.2	544.1
	Min Mz	STR 1/ 1	-84.7	0.0	71.2	-0.1	544.1	-0.1	544.1	0.2	544.1
	Min Mxy	STR 1/ 1	-84.7	0.0	71.2	-0.1	544.1	-0.1	544.1	0.2	544.1
	Min Mxz	STR 1/ 55	-66.6	0.0	71.6	-0.1	551.7	-0.1	551.7	0.1	551.7
	Min Myz	STR 1/ 1	-84.7	0.0	71.2	-0.1	544.1	-0.1	544.1	0.2	544.1

AASHTO Limit State: STR 1 - STRENGTH I

	Max/ Min ID	Combo ID	Fx (kips)	Fy (kips)	Fz (kips)	Mx (ft*kip)	My (ft*kip)	Mz (ft*kip)	Mxy (ft*kip)	Mxz (ft*kip)	Myz (ft*kip)
	Max Fx	STR 1/ 47	3148.8	0.0	-0.1	-0.1	443.3	0.1	443.3	0.2	443.3
	Max Fy	STR 1/ 9	2019.7	0.2	2.9	-3.6	290.8	4.2	290.8	5.5	290.9
	Max Fz	STR 1/ 148	2452.8	0.0	8.3	-0.1	264.2	0.1	264.2	0.2	264.2
	Max Mx	STR 1/ 62	1726.0	-5.6	1.1	60.5	258.5	-96.3	265.4	113.7	275.8
	Max My	STR 1/ 20	2934.3	0.0	-0.4	-0.1	445.7	0.1	445.7	0.2	445.7
Load No.	Max Mz	STR 1/ 9	2019.7	0.2	2.9	-3.6	290.8	4.2	290.8	5.5	290.9
3	Max Mxy	STR 1/ 20	2934.3	0.0	-0.4	-0.1	445.7	0.1	445.7	0.2	445.7
	Max Mxz	STR 1/ 62	1726.0	-5.6	1.1	60.5	258.5	-96.3	265.4	113.7	275.8
Member	Max Myz	STR 1/ 20	2934.3	0.0	-0.4	-0.1	445.7	0.1	445.7	0.2	445.7
705	Min Fx	STR 1/ 165	1257.7	0.0	3.3	-0.1	165.5	0.1	165.5	0.1	165.5
	Min Fy	STR 1/ 8	2373.1	-5.6	1.4	60.4	362.6	-96.3	367.6	113.7	375.1
Joint	Min Fz	STR 1/ 56	2034.4	0.0	-0.6	-0.1	326.0	0.1	326.0	0.1	326.0
703	Min Mx	STR 1/ 9	2019.7	0.2	2.9	-3.6	290.8	4.2	290.8	5.5	290.9
	Min My	STR 1/ 193	1638.8	0.0	7.9	-0.1	153.8	0.1	153.8	0.1	153.8
	Min Mz	STR 1/ 62	1726.0	-5.6	1.1	60.5	258.5	-96.3	265.4	113.7	275.8
	Min Mxy	STR 1/ 193	1638.8	0.0	7.9	-0.1	153.8	0.1	153.8	0.1	153.8
	Min Mxz	STR 1/ 55	1944.1	0.0	-0.5	-0.1	317.6	0.1	317.6	0.1	317.6
	Min Myz	STR 1/ 193	1638.8	0.0	7.9	-0.1	153.8	0.1	153.8	0.1	153.8
	Max Fx	STR 1/ 165	-1249.1	0.0	15.5	0.1	14.7	0.0	14.7	0.1	14.7
	Max Fy	STR 1/ 8	-2361.2	5.6	24.8	-60.4	-18.3	-67.7	63.1	90.8	70.1
	Max Fz	STR 1/ 2	-2669.5	0.0	26.5	0.1	-37.3	0.0	37.3	0.1	37.3
	Max Mx	STR 1/ 9	-2007.9	-0.2	23.2	3.6	3.3	1.6	4.9	4.0	3.6
	Max My	STR 1/ 165	-1249.1	0.0	15.5	0.1	14.7	0.0	14.7	0.1	14.7
Load No.	Max Mz	STR 1/ 9	-2007.9	-0.2	23.2	3.6	3.3	1.6	4.9	4.0	3.6
4	Max Mxy	STR 1/ 50	-2606.2	0.0	18.4	0.1	-133.5	0.0	133.5	0.1	133.5
	Max Mxz	STR 1/ 62	-1717.5	5.6	17.7	-60.5	-13.6	-67.7	62.0	90.8	69.1
Member	Max Myz	STR 1/ 50	-2606.2	0.0	18.4	0.1	-133.5	0.0	133.5	0.1	133.5
705	Min Fx	STR 1/ 47	-3136.9	0.0	26.3	0.1	-58.4	0.0	58.4	0.1	58.4
	Min Fy	STR 1/ 9	-2007.9	-0.2	23.2	3.6	3.3	1.6	4.9	4.0	3.6
Joint	Min Fz	STR 1/ 202	-1797.2	0.0	10.8	0.1	-119.0	0.0	119.0	0.1	119.0
704	Min Mx	STR 1/ 62	-1717.5	5.6	17.7	-60.5	-13.6	-67.7	62.0	90.8	69.1
	Min My	STR 1/ 50	-2606.2	0.0	18.4	0.1	-133.5	0.0	133.5	0.1	133.5
	Min Mz	STR 1/ 8	-2361.2	5.6	24.8	-60.4	-18.3	-67.7	63.1	90.8	70.1
	Min Mxy	STR 1/ 177	-1497.0	0.0	15.5	0.1	-0.9	0.0	0.9	0.1	0.9
	Min Mxz	STR 1/ 55	-1935.5	0.0	19.3	0.1	-28.2	0.0	28.2	0.1	28.2
	Min Myz	STR 1/ 177	-1497.0	0.0	15.5	0.1	-0.9	0.0	0.9	0.1	0.9

AASHTO Limit State: STR 1 - STRENGTH I

	Max/ Min ID	Combo ID	Fx (kips)	Fy (kips)	Fz (kips)	Mx (ft*kip)	My (ft*kip)	Mz (ft*kip)	Mxy (ft*kip)	Mxz (ft*kip)	Myz (ft*kip)
	Max Fx	STR 1/ 165	-404.4	0.0	-6.3	0.0	46.2	-0.1	46.2	0.1	46.2
	Max Fy	STR 1/ 9	-659.7	0.9	-16.7	-1.1	123.6	8.5	123.6	8.6	123.9
	Max Fz	STR 1/ 166	-435.2	0.0	-0.5	0.0	40.6	0.1	40.6	0.1	40.6
	Max Mx	STR 1/ 8	-795.0	-7.0	-20.2	5.1	152.8	-28.9	152.9	29.4	155.5
	Max My	STR 1/ 47	-965.2	0.0	-32.4	0.0	236.2	0.3	236.2	0.3	236.2
Load No.	Max Mz	STR 1/ 9	-659.7	0.9	-16.7	-1.1	123.6	8.5	123.6	8.6	123.9
5	Max Mxy	STR 1/ 47	-965.2	0.0	-32.4	0.0	236.2	0.3	236.2	0.3	236.2
	Max Mxz	STR 1/ 62	-581.9	-7.0	-11.1	5.1	86.1	-29.0	86.2	29.4	90.8
Member	Max Myz	STR 1/ 47	-965.2	0.0	-32.4	0.0	236.2	0.3	236.2	0.3	236.2
708	Min Fx	STR 1/ 47	-965.2	0.0	-32.4	0.0	236.2	0.3	236.2	0.3	236.2
	Min Fy	STR 1/ 8	-795.0	-7.0	-20.2	5.1	152.8	-28.9	152.9	29.4	155.5
Joint	Min Fz	STR 1/ 47	-965.2	0.0	-32.4	0.0	236.2	0.3	236.2	0.3	236.2
705	Min Mx	STR 1/ 9	-659.7	0.9	-16.7	-1.1	123.6	8.5	123.6	8.6	123.9
	Min My	STR 1/ 166	-435.2	0.0	-0.5	0.0	40.6	0.1	40.6	0.1	40.6
	Min Mz	STR 1/ 62	-581.9	-7.0	-11.1	5.1	86.1	-29.0	86.2	29.4	90.8
	Min Mxy	STR 1/ 166	-435.2	0.0	-0.5	0.0	40.6	0.1	40.6	0.1	40.6
	Min Mxz	STR 1/ 3	-646.4	0.0	-15.8	0.0	117.5	-0.1	117.5	0.1	117.5
	Min Myz	STR 1/ 166	-435.2	0.0	-0.5	0.0	40.6	0.1	40.6	0.1	40.6
	Max Fx	STR 1/ 47	972.1	0.0	34.5	0.0	130.6	0.0	130.6	0.0	130.6
	Max Fy	STR 1/ 8	801.9	7.0	22.3	-5.1	80.3	-48.3	80.4	48.6	93.7
	Max Fz	STR 1/ 47	972.1	0.0	34.5	0.0	130.6	0.0	130.6	0.0	130.6
	Max Mx	STR 1/ 9	666.6	-0.9	18.8	1.1	72.0	1.2	72.0	1.6	72.0
	Max My	STR 1/ 47	972.1	0.0	34.5	0.0	130.6	0.0	130.6	0.0	130.6
Load No.	Max Mz	STR 1/ 9	666.6	-0.9	18.8	1.1	72.0	1.2	72.0	1.6	72.0
6	Max Mxy	STR 1/ 47	972.1	0.0	34.5	0.0	130.6	0.0	130.6	0.0	130.6
	Max Mxz	STR 1/ 8	801.9	7.0	22.3	-5.1	80.3	-48.3	80.4	48.6	93.7
Member	Max Myz	STR 1/ 53	850.1	7.0	32.0	-5.1	125.9	-48.3	126.0	48.6	134.8
708	Min Fx	STR 1/ 165	409.4	0.0	7.8	0.0	31.7	0.0	31.7	0.0	31.7
	Min Fy	STR 1/ 9	666.6	-0.9	18.8	1.1	72.0	1.2	72.0	1.6	72.0
Joint	Min Fz	STR 1/ 166	440.2	0.0	2.0	0.0	-26.8	0.0	26.8	0.0	26.8
706	Min Mx	STR 1/ 8	801.9	7.0	22.3	-5.1	80.3	-48.3	80.4	48.6	93.7
	Min My	STR 1/ 166	440.2	0.0	2.0	0.0	-26.8	0.0	26.8	0.0	26.8
	Min Mz	STR 1/ 8	801.9	7.0	22.3	-5.1	80.3	-48.3	80.4	48.6	93.7
	Min Mxy	STR 1/ 193	443.1	0.0	7.5	0.0	2.4	0.0	2.4	0.0	2.4
	Min Mxz	STR 1/ 1	897.4	0.0	23.0	0.0	78.5	0.0	78.5	0.0	78.5
	Min Myz	STR 1/ 193	443.1	0.0	7.5	0.0	2.4	0.0	2.4	0.0	2.4

AASHTO Limit State: STR 1 - STRENGTH I

	Max/ Min ID	Combo ID	Fx (kips)	Fy (kips)	Fz (kips)	Mx (ft*kip)	My (ft*kip)	Mz (ft*kip)	Mxy (ft*kip)	Mxz (ft*kip)	Myz (ft*kip)
	Max Fx	STR 1/ 47	976.0	0.0	3.6	0.0	91.8	0.1	91.8	0.1	91.8
	Max Fy	STR 1/ 9	644.8	0.2	4.7	-1.1	60.7	1.9	60.7	2.1	60.7
	Max Fz	STR 1/ 111	602.3	0.0	4.8	0.0	58.0	0.1	58.0	0.1	58.0
	Max Mx	STR 1/ 1	779.9	0.0	4.3	0.0	75.0	0.1	75.0	0.1	75.0
	Max My	STR 1/ 47	976.0	0.0	3.6	0.0	91.8	0.1	91.8	0.1	91.8
Load No.	Max Mz	STR 1/ 9	644.8	0.2	4.7	-1.1	60.7	1.9	60.7	2.1	60.7
7	Max Mxy	STR 1/ 47	976.0	0.0	3.6	0.0	91.8	0.1	91.8	0.1	91.8
	Max Mxz	STR 1/ 7	726.6	-0.9	4.5	-10.9	68.4	0.5	69.2	10.9	68.4
Member	Max Myz	STR 1/ 47	976.0	0.0	3.6	0.0	91.8	0.1	91.8	0.1	91.8
711	Min Fx	STR 1/ 165	346.0	0.0	3.5	0.0	44.8	0.1	44.8	0.1	44.8
	Min Fy	STR 1/ 8	754.9	-1.1	4.5	-9.8	69.4	-1.5	70.1	9.9	69.4
Joint	Min Fz	STR 1/ 101	719.7	0.0	2.3	0.0	78.6	0.1	78.6	0.1	78.6
707	Min Mx	STR 1/ 7	726.6	-0.9	4.5	-10.9	68.4	0.5	69.2	10.9	68.4
	Min My	STR 1/ 165	346.0	0.0	3.5	0.0	44.8	0.1	44.8	0.1	44.8
	Min Mz	STR 1/ 62	498.7	-1.1	3.2	-9.8	56.2	-1.5	57.1	9.9	56.2
	Min Mxy	STR 1/ 165	346.0	0.0	3.5	0.0	44.8	0.1	44.8	0.1	44.8
	Min Mxz	STR 1/ 55	523.7	0.0	3.0	0.0	61.8	0.1	61.8	0.1	61.8
	Min Myz	STR 1/ 165	346.0	0.0	3.5	0.0	44.8	0.1	44.8	0.1	44.8
	Max Fx	STR 1/ 165	-340.4	0.0	7.8	0.0	11.5	0.0	11.5	0.0	11.5
	Max Fy	STR 1/ 8	-747.0	1.1	11.1	9.8	20.6	-26.4	22.8	28.2	33.5
	Max Fz	STR 1/ 47	-968.1	0.0	12.0	0.0	17.9	0.0	17.9	0.0	17.9
	Max Mx	STR 1/ 7	-718.7	0.9	11.1	10.9	20.7	-25.6	23.4	27.8	32.9
	Max My	STR 1/ 112	-652.9	0.0	11.2	0.0	28.5	0.0	28.5	0.0	28.5
Load No.	Max Mz	STR 1/ 9	-637.0	-0.2	11.0	1.1	21.8	0.7	21.8	1.3	21.8
8	Max Mxy	STR 1/ 112	-652.9	0.0	11.2	0.0	28.5	0.0	28.5	0.0	28.5
	Max Mxz	STR 1/ 8	-747.0	1.1	11.1	9.8	20.6	-26.4	22.8	28.2	33.5
Member	Max Myz	STR 1/ 116	-732.8	1.1	11.0	9.8	20.8	-26.4	23.0	28.2	33.6
711	Min Fx	STR 1/ 47	-968.1	0.0	12.0	0.0	17.9	0.0	17.9	0.0	17.9
	Min Fy	STR 1/ 9	-637.0	-0.2	11.0	1.1	21.8	0.7	21.8	1.3	21.8
Joint	Min Fz	STR 1/ 165	-340.4	0.0	7.8	0.0	11.5	0.0	11.5	0.0	11.5
708	Min Mx	STR 1/ 1	-772.1	0.0	11.3	0.0	19.9	0.0	19.9	0.0	19.9
	Min My	STR 1/ 83	-609.4	0.0	8.7	0.0	7.2	0.0	7.2	0.0	7.2
	Min Mz	STR 1/ 8	-747.0	1.1	11.1	9.8	20.6	-26.4	22.8	28.2	33.5
	Min Mxy	STR 1/ 83	-609.4	0.0	8.7	0.0	7.2	0.0	7.2	0.0	7.2
	Min Mxz	STR 1/ 1	-772.1	0.0	11.3	0.0	19.9	0.0	19.9	0.0	19.9
	Min Myz	STR 1/ 83	-609.4	0.0	8.7	0.0	7.2	0.0	7.2	0.0	7.2

AASHTO Limit State: STR 1 - STRENGTH I

	Max/ Min ID	Combo ID	Fx (kips)	Fy (kips)	Fz (kips)	Mx (ft*kip)	My (ft*kip)	Mz (ft*kip)	Mxy (ft*kip)	Mxz (ft*kip)	Myz (ft*kip)
	Max Fx	STR 1/ 192	-65.4	0.0	13.5	0.0	-95.1	0.0	95.1	0.0	95.1
	Max Fy	STR 1/ 7	-243.8	12.3	5.8	7.2	-53.5	153.8	54.0	154.0	162.9
	Max Fz	STR 1/ 84	-77.0	0.0	13.5	0.0	-95.5	0.0	95.5	0.0	95.5
	Max Mx	STR 1/ 8	-251.8	11.6	4.9	7.4	-48.6	147.0	49.1	147.2	154.8
	Max My	STR 1/ 128	-297.4	0.0	2.4	0.0	-34.3	0.0	34.3	0.0	34.3
Load No.	Max Mz	STR 1/ 7	-243.8	12.3	5.8	7.2	-53.5	153.8	54.0	154.0	162.9
9	Max Mxy	STR 1/ 84	-77.0	0.0	13.5	0.0	-95.5	0.0	95.5	0.0	95.5
	Max Mxz	STR 1/ 7	-243.8	12.3	5.8	7.2	-53.5	153.8	54.0	154.0	162.9
Member	Max Myz	STR 1/ 88	-136.3	12.3	12.1	7.2	-87.6	153.8	87.9	154.0	177.0
714	Min Fx	STR 1/ 11	-311.2	0.0	2.9	0.0	-37.3	0.0	37.3	0.0	37.3
	Min Fy	STR 1/ 1	-287.2	0.0	6.0	0.0	-55.2	0.0	55.2	0.0	55.2
Joint	Min Fz	STR 1/ 20	-309.0	0.0	2.4	0.0	-34.7	0.0	34.7	0.0	34.7
709	Min Mx	STR 1/ 9	-192.3	0.7	6.3	-0.4	-56.5	6.8	56.5	6.8	56.9
	Min My	STR 1/ 84	-77.0	0.0	13.5	0.0	-95.5	0.0	95.5	0.0	95.5
	Min Mz	STR 1/ 1	-287.2	0.0	6.0	0.0	-55.2	0.0	55.2	0.0	55.2
	Min Mxy	STR 1/ 128	-297.4	0.0	2.4	0.0	-34.3	0.0	34.3	0.0	34.3
	Min Mxz	STR 1/ 1	-287.2	0.0	6.0	0.0	-55.2	0.0	55.2	0.0	55.2
	Min Myz	STR 1/ 128	-297.4	0.0	2.4	0.0	-34.3	0.0	34.3	0.0	34.3
	Max Fx	STR 1/ 11	318.9	0.0	-2.8	0.0	3.0	0.0	3.0	0.0	3.0
	Max Fy	STR 1/ 1	294.9	0.0	-5.9	0.0	-15.0	0.0	15.0	0.0	15.0
	Max Fz	STR 1/ 20	316.8	0.0	-2.3	0.0	6.5	0.0	6.5	0.0	6.5
	Max Mx	STR 1/ 9	200.1	-0.7	-6.2	0.4	-19.4	1.1	19.4	1.1	19.4
	Max My	STR 1/ 23	211.6	0.0	-2.3	0.0	9.7	0.0	9.7	0.0	9.7
Load No.	Max Mz	STR 1/ 9	200.1	-0.7	-6.2	0.4	-19.4	1.1	19.4	1.1	19.4
10	Max Mxy	STR 1/ 84	82.6	0.0	-13.4	0.0	-64.6	0.0	64.6	0.0	64.6
	Max Mxz	STR 1/ 8	259.6	-11.6	-4.8	-7.4	-10.7	-10.3	12.9	12.7	14.8
Member	Max Myz	STR 1/ 84	82.6	0.0	-13.4	0.0	-64.6	0.0	64.6	0.0	64.6
714	Min Fx	STR 1/ 192	71.0	0.0	-13.4	0.0	-64.6	0.0	64.6	0.0	64.6
	Min Fy	STR 1/ 7	251.5	-12.3	-5.7	-7.2	-15.0	-9.3	16.7	11.7	17.7
Joint	Min Fz	STR 1/ 84	82.6	0.0	-13.4	0.0	-64.6	0.0	64.6	0.0	64.6
710	Min Mx	STR 1/ 8	259.6	-11.6	-4.8	-7.4	-10.7	-10.3	12.9	12.7	14.8
	Min My	STR 1/ 84	82.6	0.0	-13.4	0.0	-64.6	0.0	64.6	0.0	64.6
	Min Mz	STR 1/ 8	259.6	-11.6	-4.8	-7.4	-10.7	-10.3	12.9	12.7	14.8
	Min Mxy	STR 1/ 38	296.6	0.0	-3.5	0.0	-0.4	0.0	0.4	0.0	0.4
	Min Mxz	STR 1/ 1	294.9	0.0	-5.9	0.0	-15.0	0.0	15.0	0.0	15.0
	Min Myz	STR 1/ 38	296.6	0.0	-3.5	0.0	-0.4	0.0	0.4	0.0	0.4

AASHTO Limit State: STR 1 - STRENGTH I

	Max/ Min ID	Combo ID	Fx (kips)	Fy (kips)	Fz (kips)	Mx (ft*kip)	My (ft*kip)	Mz (ft*kip)	Mxy (ft*kip)	Mxz (ft*kip)	Myz (ft*kip)
	Max Fx	STR 1/ 123	-220.8	0.0	3.5	0.0	55.3	0.0	55.3	0.0	55.3
	Max Fy	STR 1/ 7	-315.3	1.4	3.3	-33.3	60.4	46.9	69.0	57.5	76.5
	Max Fz	STR 1/ 112	-245.3	0.0	3.7	0.0	52.4	0.0	52.4	0.0	52.4
	Max Mx	STR 1/ 1	-378.7	0.0	3.1	0.0	66.0	0.0	66.0	0.0	66.0
	Max My	STR 1/ 47	-381.6	0.0	2.9	0.0	71.4	0.0	71.4	0.0	71.4
Load No.	Max Mz	STR 1/ 7	-315.3	1.4	3.3	-33.3	60.4	46.9	69.0	57.5	76.5
11	Max Mxy	STR 1/ 53	-334.9	1.2	3.2	-32.6	64.9	45.3	72.6	55.8	79.2
	Max Mxz	STR 1/ 7	-315.3	1.4	3.3	-33.3	60.4	46.9	69.0	57.5	76.5
Member	Max Myz	STR 1/ 52	-351.5	1.4	3.2	-33.3	63.9	46.9	72.0	57.5	79.2
717	Min Fx	STR 1/ 82	-438.4	0.0	1.9	0.0	55.5	0.0	55.5	0.0	55.5
	Min Fy	STR 1/ 1	-378.7	0.0	3.1	0.0	66.0	0.0	66.0	0.0	66.0
Joint	Min Fz	STR 1/ 65	-337.9	0.0	1.6	0.0	59.2	0.0	59.2	0.0	59.2
711	Min Mx	STR 1/ 7	-315.3	1.4	3.3	-33.3	60.4	46.9	69.0	57.5	76.5
	Min My	STR 1/ 165	-278.0	0.0	2.3	0.0	40.4	0.0	40.4	0.0	40.4
	Min Mz	STR 1/ 1	-378.7	0.0	3.1	0.0	66.0	0.0	66.0	0.0	66.0
	Min Mxy	STR 1/ 165	-278.0	0.0	2.3	0.0	40.4	0.0	40.4	0.0	40.4
	Min Mxz	STR 1/ 1	-378.7	0.0	3.1	0.0	66.0	0.0	66.0	0.0	66.0
	Min Myz	STR 1/ 165	-278.0	0.0	2.3	0.0	40.4	0.0	40.4	0.0	40.4
	Max Fx	STR 1/ 82	444.1	0.0	7.8	0.0	16.1	0.0	16.1	0.0	16.1
	Max Fy	STR 1/ 1	386.6	0.0	10.4	0.0	21.4	0.0	21.4	0.0	21.4
	Max Fz	STR 1/ 11	336.0	0.0	10.7	0.0	19.6	0.0	19.6	0.0	19.6
	Max Mx	STR 1/ 7	323.2	-1.4	10.2	33.3	22.3	-15.6	40.0	36.7	27.2
	Max My	STR 1/ 111	276.1	0.0	9.9	0.0	24.3	0.0	24.3	0.0	24.3
Load No.	Max Mz	STR 1/ 9	276.3	-0.2	10.0	0.7	23.5	1.4	23.5	1.6	23.5
12	Max Mxy	STR 1/ 115	306.4	-1.4	10.1	33.3	22.5	-15.6	40.2	36.7	27.4
	Max Mxz	STR 1/ 7	323.2	-1.4	10.2	33.3	22.3	-15.6	40.0	36.7	27.2
Member	Max Myz	STR 1/ 116	289.7	-1.2	10.1	32.6	22.2	-17.0	39.4	36.7	27.9
717	Min Fx	STR 1/ 123	228.7	0.0	10.0	0.0	22.7	0.0	22.7	0.0	22.7
	Min Fy	STR 1/ 7	323.2	-1.4	10.2	33.3	22.3	-15.6	40.0	36.7	27.2
Joint	Min Fz	STR 1/ 166	260.7	0.0	7.2	0.0	16.7	0.0	16.7	0.0	16.7
712	Min Mx	STR 1/ 1	386.6	0.0	10.4	0.0	21.4	0.0	21.4	0.0	21.4
	Min My	STR 1/ 101	397.0	0.0	8.1	0.0	14.0	0.0	14.0	0.0	14.0
	Min Mz	STR 1/ 8	306.6	-1.2	10.2	32.6	21.9	-17.0	39.2	36.7	27.7
	Min Mxy	STR 1/ 101	397.0	0.0	8.1	0.0	14.0	0.0	14.0	0.0	14.0
	Min Mxz	STR 1/ 1	386.6	0.0	10.4	0.0	21.4	0.0	21.4	0.0	21.4
	Min Myz	STR 1/ 101	397.0	0.0	8.1	0.0	14.0	0.0	14.0	0.0	14.0

AASHTO Limit State: STR 1 - STRENGTH I

	Max/ Min ID	Combo ID	Fx (kips)	Fy (kips)	Fz (kips)	Mx (ft*kip)	My (ft*kip)	Mz (ft*kip)	Mxy (ft*kip)	Mxz (ft*kip)	Myz (ft*kip)
	Max Fx	STR 1/ 49	307.9	0.0	-26.7	0.0	202.3	0.0	202.3	0.0	202.3
	Max Fy	STR 1/ 1	241.2	0.0	-30.6	0.0	228.2	0.0	228.2	0.0	228.2
	Max Fz	STR 1/ 168	196.8	0.0	-21.9	0.0	163.3	0.0	163.3	0.0	163.3
	Max Mx	STR 1/ 7	234.8	-16.6	-27.8	35.7	208.8	-195.7	211.8	198.9	286.1
	Max My	STR 1/ 46	304.0	0.0	-31.6	0.0	237.3	0.0	237.3	0.0	237.3
Load No.	Max Mz	STR 1/ 1	241.2	0.0	-30.6	0.0	228.2	0.0	228.2	0.0	228.2
13	Max Mxy	STR 1/ 46	304.0	0.0	-31.6	0.0	237.3	0.0	237.3	0.0	237.3
	Max Mxz	STR 1/ 7	234.8	-16.6	-27.8	35.7	208.8	-195.7	211.8	198.9	286.1
Member	Max Myz	STR 1/ 52	297.6	-16.6	-28.8	35.7	217.9	-195.7	220.8	198.9	292.8
720	Min Fx	STR 1/ 168	196.8	0.0	-21.9	0.0	163.3	0.0	163.3	0.0	163.3
	Min Fy	STR 1/ 7	234.8	-16.6	-27.8	35.7	208.8	-195.7	211.8	198.9	286.1
Joint	Min Fz	STR 1/ 46	304.0	0.0	-31.6	0.0	237.3	0.0	237.3	0.0	237.3
713	Min Mx	STR 1/ 1	241.2	0.0	-30.6	0.0	228.2	0.0	228.2	0.0	228.2
	Min My	STR 1/ 168	196.8	0.0	-21.9	0.0	163.3	0.0	163.3	0.0	163.3
	Min Mz	STR 1/ 7	234.8	-16.6	-27.8	35.7	208.8	-195.7	211.8	198.9	286.1
	Min Mxy	STR 1/ 168	196.8	0.0	-21.9	0.0	163.3	0.0	163.3	0.0	163.3
	Min Mxz	STR 1/ 1	241.2	0.0	-30.6	0.0	228.2	0.0	228.2	0.0	228.2
	Min Myz	STR 1/ 168	196.8	0.0	-21.9	0.0	163.3	0.0	163.3	0.0	163.3
	Max Fx	STR 1/ 168	-191.0	0.0	24.2	0.0	143.5	0.0	143.5	0.0	143.5
	Max Fy	STR 1/ 7	-226.6	16.6	30.9	-35.7	181.7	-26.1	185.1	44.2	183.5
	Max Fz	STR 1/ 46	-295.9	0.0	34.8	0.0	206.0	0.0	206.0	0.0	206.0
	Max Mx	STR 1/ 1	-233.1	0.0	33.7	0.0	199.9	0.0	199.9	0.0	199.9
	Max My	STR 1/ 46	-295.9	0.0	34.8	0.0	206.0	0.0	206.0	0.0	206.0
Load No.	Max Mz	STR 1/ 1	-233.1	0.0	33.7	0.0	199.9	0.0	199.9	0.0	199.9
14	Max Mxy	STR 1/ 46	-295.9	0.0	34.8	0.0	206.0	0.0	206.0	0.0	206.0
	Max Mxz	STR 1/ 7	-226.6	16.6	30.9	-35.7	181.7	-26.1	185.1	44.2	183.5
Member	Max Myz	STR 1/ 46	-295.9	0.0	34.8	0.0	206.0	0.0	206.0	0.0	206.0
720	Min Fx	STR 1/ 49	-299.8	0.0	29.9	0.0	174.3	0.0	174.3	0.0	174.3
	Min Fy	STR 1/ 1	-233.1	0.0	33.7	0.0	199.9	0.0	199.9	0.0	199.9
Joint	Min Fz	STR 1/ 168	-191.0	0.0	24.2	0.0	143.5	0.0	143.5	0.0	143.5
714	Min Mx	STR 1/ 7	-226.6	16.6	30.9	-35.7	181.7	-26.1	185.1	44.2	183.5
	Min My	STR 1/ 177	-205.9	0.0	24.2	0.0	143.4	0.0	143.4	0.0	143.4
	Min Mz	STR 1/ 7	-226.6	16.6	30.9	-35.7	181.7	-26.1	185.1	44.2	183.5
	Min Mxy	STR 1/ 177	-205.9	0.0	24.2	0.0	143.4	0.0	143.4	0.0	143.4
	Min Mxz	STR 1/ 1	-233.1	0.0	33.7	0.0	199.9	0.0	199.9	0.0	199.9
	Min Myz	STR 1/ 177	-205.9	0.0	24.2	0.0	143.4	0.0	143.4	0.0	143.4

AASHTO Limit State: STR 1 - STRENGTH I

	Max/ Min ID	Combo ID	Fx (kips)	Fy (kips)	Fz (kips)	Mx (ft*kip)	My (ft*kip)	Mz (ft*kip)	Mxy (ft*kip)	Mxz (ft*kip)	Myz (ft*kip)
	Max Fx	STR 1/ 168	-730.7	0.0	-0.7	0.0	44.0	0.0	44.0	0.0	44.0
	Max Fy	STR 1/ 7	-1123.8	5.1	-0.7	-41.0	60.6	98.0	73.1	106.2	115.2
	Max Fz	STR 1/ 138	-992.9	0.0	0.0	0.0	49.6	0.0	49.6	0.0	49.6
	Max Mx	STR 1/ 1	-1272.2	0.0	-1.1	0.0	65.5	0.0	65.5	0.0	65.5
	Max My	STR 1/ 11	-1292.7	0.0	-1.4	0.0	69.3	0.0	69.3	0.0	69.3
Load No.	Max Mz	STR 1/ 7	-1123.8	5.1	-0.7	-41.0	60.6	98.0	73.1	106.2	115.2
15	Max Mxy	STR 1/ 17	-1148.0	4.7	-0.9	-40.6	63.7	96.1	75.5	104.3	115.3
	Max Mxz	STR 1/ 7	-1123.8	5.1	-0.7	-41.0	60.6	98.0	73.1	106.2	115.2
Member	Max Myz	STR 1/ 16	-1151.5	5.1	-0.9	-41.0	63.0	98.0	75.1	106.2	116.5
723	Min Fx	STR 1/ 46	-1373.8	0.0	-1.0	0.0	64.4	0.0	64.4	0.0	64.4
	Min Fy	STR 1/ 1	-1272.2	0.0	-1.1	0.0	65.5	0.0	65.5	0.0	65.5
Joint	Min Fz	STR 1/ 65	-1087.2	0.0	-1.8	0.0	59.0	0.0	59.0	0.0	59.0
715	Min Mx	STR 1/ 7	-1123.8	5.1	-0.7	-41.0	60.6	98.0	73.1	106.2	115.2
	Min My	STR 1/ 192	-787.4	0.0	-0.4	0.0	39.3	0.0	39.3	0.0	39.3
	Min Mz	STR 1/ 1	-1272.2	0.0	-1.1	0.0	65.5	0.0	65.5	0.0	65.5
	Min Mxy	STR 1/ 192	-787.4	0.0	-0.4	0.0	39.3	0.0	39.3	0.0	39.3
	Min Mxz	STR 1/ 1	-1272.2	0.0	-1.1	0.0	65.5	0.0	65.5	0.0	65.5
	Min Myz	STR 1/ 192	-787.4	0.0	-0.4	0.0	39.3	0.0	39.3	0.0	39.3
	Max Fx	STR 1/ 46	1381.8	0.0	11.5	0.0	62.7	0.0	62.7	0.0	62.7
	Max Fy	STR 1/ 1	1280.2	0.0	11.6	0.0	63.8	0.0	63.8	0.0	63.8
	Max Fz	STR 1/ 11	1300.7	0.0	11.9	0.0	64.8	0.0	64.8	0.0	64.8
	Max Mx	STR 1/ 7	1131.8	-5.1	11.2	41.0	61.2	3.7	73.6	41.1	61.3
	Max My	STR 1/ 19	1331.9	0.0	11.8	0.0	65.2	0.0	65.2	0.0	65.2
Load No.	Max Mz	STR 1/ 7	1131.8	-5.1	11.2	41.0	61.2	3.7	73.6	41.1	61.3
16	Max Mxy	STR 1/ 25	1183.5	-5.1	11.4	41.0	62.6	3.7	74.8	41.1	62.7
	Max Mxz	STR 1/ 7	1131.8	-5.1	11.2	41.0	61.2	3.7	73.6	41.1	61.3
Member	Max Myz	STR 1/ 19	1331.9	0.0	11.8	0.0	65.2	0.0	65.2	0.0	65.2
723	Min Fx	STR 1/ 168	736.5	0.0	8.2	0.0	47.0	0.0	47.0	0.0	47.0
	Min Fy	STR 1/ 7	1131.8	-5.1	11.2	41.0	61.2	3.7	73.6	41.1	61.3
Joint	Min Fz	STR 1/ 192	793.2	0.0	7.9	0.0	44.6	0.0	44.6	0.0	44.6
716	Min Mx	STR 1/ 1	1280.2	0.0	11.6	0.0	63.8	0.0	63.8	0.0	63.8
	Min My	STR 1/ 195	786.4	0.0	7.9	0.0	44.5	0.0	44.5	0.0	44.5
	Min Mz	STR 1/ 1	1280.2	0.0	11.6	0.0	63.8	0.0	63.8	0.0	63.8
	Min Mxy	STR 1/ 195	786.4	0.0	7.9	0.0	44.5	0.0	44.5	0.0	44.5
	Min Mxz	STR 1/ 1	1280.2	0.0	11.6	0.0	63.8	0.0	63.8	0.0	63.8
	Min Myz	STR 1/ 195	786.4	0.0	7.9	0.0	44.5	0.0	44.5	0.0	44.5

AASHTO Limit State: STR 1 - STRENGTH I

	Max/ Min ID	Combo ID	Fx (kips)	Fy (kips)	Fz (kips)	Mx (ft*kip)	My (ft*kip)	Mz (ft*kip)	Mxy (ft*kip)	Mxz (ft*kip)	Myz (ft*kip)
	Max Fx	STR 1/ 47	1118.0	0.0	-19.2	0.0	233.5	0.0	233.5	0.0	233.5
	Max Fy	STR 1/ 1	1003.1	0.0	-18.1	0.0	219.6	0.0	219.6	0.0	219.6
	Max Fz	STR 1/ 165	617.2	0.0	-11.6	0.0	138.0	0.0	138.0	0.0	138.0
	Max Mx	STR 1/ 7	932.1	-8.2	-16.3	37.1	201.4	-100.8	204.8	107.4	225.2
	Max My	STR 1/ 20	1108.7	0.0	-19.2	0.0	235.9	0.0	235.9	0.0	235.9
Load No.	Max Mz	STR 1/ 1	1003.1	0.0	-18.1	0.0	219.6	0.0	219.6	0.0	219.6
17	Max Mxy	STR 1/ 20	1108.7	0.0	-19.2	0.0	235.9	0.0	235.9	0.0	235.9
	Max Mxz	STR 1/ 7	932.1	-8.2	-16.3	37.1	201.4	-100.8	204.8	107.4	225.2
Member	Max Myz	STR 1/ 25	1022.6	-8.2	-17.4	37.1	215.9	-100.8	219.1	107.4	238.3
726	Min Fx	STR 1/ 165	617.2	0.0	-11.6	0.0	138.0	0.0	138.0	0.0	138.0
	Min Fy	STR 1/ 7	932.1	-8.2	-16.3	37.1	201.4	-100.8	204.8	107.4	225.2
Joint	Min Fz	STR 1/ 19	1093.6	0.0	-19.2	0.0	234.1	0.0	234.1	0.0	234.1
717	Min Mx	STR 1/ 1	1003.1	0.0	-18.1	0.0	219.6	0.0	219.6	0.0	219.6
	Min My	STR 1/ 192	626.5	0.0	-11.6	0.0	135.6	0.0	135.6	0.0	135.6
	Min Mz	STR 1/ 7	932.1	-8.2	-16.3	37.1	201.4	-100.8	204.8	107.4	225.2
	Min Mxy	STR 1/ 192	626.5	0.0	-11.6	0.0	135.6	0.0	135.6	0.0	135.6
	Min Mxz	STR 1/ 1	1003.1	0.0	-18.1	0.0	219.6	0.0	219.6	0.0	219.6
	Min Myz	STR 1/ 192	626.5	0.0	-11.6	0.0	135.6	0.0	135.6	0.0	135.6
	Max Fx	STR 1/ 165	-611.5	0.0	16.9	0.0	97.7	0.0	97.7	0.0	97.7
	Max Fy	STR 1/ 7	-924.1	8.2	23.7	-37.1	129.8	-36.8	135.0	52.2	134.9
	Max Fz	STR 1/ 19	-1085.6	0.0	26.6	0.0	145.4	0.0	145.4	0.0	145.4
	Max Mx	STR 1/ 1	-995.1	0.0	25.5	0.0	142.2	0.0	142.2	0.0	142.2
	Max My	STR 1/ 46	-1094.9	0.0	26.6	0.0	147.2	0.0	147.2	0.0	147.2
Load No.	Max Mz	STR 1/ 1	-995.1	0.0	25.5	0.0	142.2	0.0	142.2	0.0	142.2
18	Max Mxy	STR 1/ 46	-1094.9	0.0	26.6	0.0	147.2	0.0	147.2	0.0	147.2
	Max Mxz	STR 1/ 7	-924.1	8.2	23.7	-37.1	129.8	-36.8	135.0	52.2	134.9
Member	Max Myz	STR 1/ 46	-1094.9	0.0	26.6	0.0	147.2	0.0	147.2	0.0	147.2
726	Min Fx	STR 1/ 47	-1110.0	0.0	26.6	0.0	146.6	0.0	146.6	0.0	146.6
	Min Fy	STR 1/ 1	-995.1	0.0	25.5	0.0	142.2	0.0	142.2	0.0	142.2
Joint	Min Fz	STR 1/ 165	-611.5	0.0	16.9	0.0	97.7	0.0	97.7	0.0	97.7
718	Min Mx	STR 1/ 7	-924.1	8.2	23.7	-37.1	129.8	-36.8	135.0	52.2	134.9
	Min My	STR 1/ 168	-624.1	0.0	16.9	0.0	97.2	0.0	97.2	0.0	97.2
	Min Mz	STR 1/ 7	-924.1	8.2	23.7	-37.1	129.8	-36.8	135.0	52.2	134.9
	Min Mxy	STR 1/ 168	-624.1	0.0	16.9	0.0	97.2	0.0	97.2	0.0	97.2
	Min Mxz	STR 1/ 1	-995.1	0.0	25.5	0.0	142.2	0.0	142.2	0.0	142.2
	Min Myz	STR 1/ 168	-624.1	0.0	16.9	0.0	97.2	0.0	97.2	0.0	97.2

AASHTO Limit State: STR 1 - STRENGTH I

	Max/ Min ID	Combo ID	Fx (kips)	Fy (kips)	Fz (kips)	Mx (ft*kip)	My (ft*kip)	Mz (ft*kip)	Mxy (ft*kip)	Mxz (ft*kip)	Myz (ft*kip)
	Max Fx	STR 1/ 165	-890.5	0.0	3.7	0.0	-33.6	0.0	33.6	0.0	33.6
	Max Fy	STR 1/ 7	-1432.3	11.0	9.3	-30.5	-81.8	147.9	87.3	151.0	169.0
	Max Fz	STR 1/ 20	-1697.1	0.0	12.5	0.0	-112.5	0.0	112.5	0.0	112.5
	Max Mx	STR 1/ 1	-1608.3	0.0	10.2	0.0	-90.0	0.0	90.0	0.0	90.0
	Max My	STR 1/ 192	-903.7	0.0	3.4	0.0	-31.7	0.0	31.7	0.0	31.7
Load No.	Max Mz	STR 1/ 7	-1432.3	11.0	9.3	-30.5	-81.8	147.9	87.3	151.0	169.0
19	Max Mxy	STR 1/ 20	-1697.1	0.0	12.5	0.0	-112.5	0.0	112.5	0.0	112.5
	Max Mxz	STR 1/ 7	-1432.3	11.0	9.3	-30.5	-81.8	147.9	87.3	151.0	169.0
Member	Max Myz	STR 1/ 25	-1507.1	11.0	11.3	-30.5	-102.1	147.9	106.6	151.0	179.7
729	Min Fx	STR 1/ 47	-1710.3	0.0	12.2	0.0	-110.6	0.0	110.6	0.0	110.6
	Min Fy	STR 1/ 1	-1608.3	0.0	10.2	0.0	-90.0	0.0	90.0	0.0	90.0
Joint	Min Fz	STR 1/ 192	-903.7	0.0	3.4	0.0	-31.7	0.0	31.7	0.0	31.7
719	Min Mx	STR 1/ 7	-1432.3	11.0	9.3	-30.5	-81.8	147.9	87.3	151.0	169.0
	Min My	STR 1/ 20	-1697.1	0.0	12.5	0.0	-112.5	0.0	112.5	0.0	112.5
	Min Mz	STR 1/ 1	-1608.3	0.0	10.2	0.0	-90.0	0.0	90.0	0.0	90.0
	Min Mxy	STR 1/ 192	-903.7	0.0	3.4	0.0	-31.7	0.0	31.7	0.0	31.7
	Min Mxz	STR 1/ 1	-1608.3	0.0	10.2	0.0	-90.0	0.0	90.0	0.0	90.0
	Min Myz	STR 1/ 192	-903.7	0.0	3.4	0.0	-31.7	0.0	31.7	0.0	31.7
	Max Fx	STR 1/ 47	1718.6	0.0	-5.7	0.0	-30.4	-0.1	30.4	0.1	30.4
	Max Fy	STR 1/ 1	1616.6	0.0	-3.7	0.0	-20.3	-0.1	20.3	0.1	20.3
	Max Fz	STR 1/ 192	909.6	0.0	1.3	0.0	14.6	-0.1	14.6	0.1	14.6
	Max Mx	STR 1/ 7	1440.5	-11.0	-2.8	30.5	-16.1	27.2	34.4	40.8	31.6
	Max My	STR 1/ 192	909.6	0.0	1.3	0.0	14.6	-0.1	14.6	0.1	14.6
Load No.	Max Mz	STR 1/ 61	1133.4	-11.0	-0.2	30.5	3.9	27.2	30.7	40.8	27.5
20	Max Mxy	STR 1/ 26	1522.3	-10.5	-4.9	29.9	-28.0	21.2	41.0	36.7	35.1
	Max Mxz	STR 1/ 61	1133.4	-11.0	-0.2	30.5	3.9	27.2	30.7	40.8	27.5
Member	Max Myz	STR 1/ 25	1515.3	-11.0	-4.8	30.5	-26.6	27.2	40.4	40.8	38.0
729	Min Fx	STR 1/ 165	896.4	0.0	1.0	0.0	11.7	-0.1	11.7	0.1	11.7
	Min Fy	STR 1/ 7	1440.5	-11.0	-2.8	30.5	-16.1	27.2	34.4	40.8	31.6
Joint	Min Fz	STR 1/ 20	1705.4	0.0	-6.0	0.0	-33.3	-0.1	33.3	0.1	33.3
720	Min Mx	STR 1/ 1	1616.6	0.0	-3.7	0.0	-20.3	-0.1	20.3	0.1	20.3
	Min My	STR 1/ 20	1705.4	0.0	-6.0	0.0	-33.3	-0.1	33.3	0.1	33.3
	Min Mz	STR 1/ 1	1616.6	0.0	-3.7	0.0	-20.3	-0.1	20.3	0.1	20.3
	Min Mxy	STR 1/ 75	1018.0	0.0	-1.1	0.0	0.0	-0.1	0.0	0.1	0.1
	Min Mxz	STR 1/ 55	1309.4	0.0	-1.1	0.0	-0.3	-0.1	0.3	0.1	0.3
	Min Myz	STR 1/ 75	1018.0	0.0	-1.1	0.0	0.0	-0.1	0.0	0.1	0.1

AASHTO Limit State: STR 1 - STRENGTH I

	Max/ Min ID	Combo ID	Fx (kips)	Fy (kips)	Fz (kips)	Mx (ft*kip)	My (ft*kip)	Mz (ft*kip)	Mxy (ft*kip)	Mxz (ft*kip)	Myz (ft*kip)
	Max Fx	STR 1/ 20	2341.2	0.0	11.3	0.0	-50.9	0.0	50.9	0.0	50.9
	Max Fy	STR 1/ 7	1881.4	0.4	9.5	1.6	-33.9	9.5	33.9	9.6	35.2
	Max Fz	STR 1/ 19	2303.4	0.0	11.3	0.0	-51.4	0.0	51.4	0.0	51.4
	Max Mx	STR 1/ 7	1881.4	0.4	9.5	1.6	-33.9	9.5	33.9	9.6	35.2
	Max My	STR 1/ 83	1498.3	0.0	5.7	0.0	-6.8	0.0	6.8	0.0	6.8
Load No.	Max Mz	STR 1/ 8	1900.3	0.4	9.5	1.4	-33.5	11.4	33.6	11.5	35.4
21	Max Mxy	STR 1/ 23	2038.3	0.0	11.1	0.0	-53.5	0.0	53.5	0.0	53.5
	Max Mxz	STR 1/ 8	1900.3	0.4	9.5	1.4	-33.5	11.4	33.6	11.5	35.4
Member	Max Myz	STR 1/ 23	2038.3	0.0	11.1	0.0	-53.5	0.0	53.5	0.0	53.5
732	Min Fx	STR 1/ 192	1069.1	0.0	5.4	0.0	-7.8	0.0	7.8	0.0	7.8
	Min Fy	STR 1/ 1	2037.5	0.0	9.6	0.0	-33.9	0.0	33.9	0.0	33.9
Joint	Min Fz	STR 1/ 84	1110.5	0.0	5.4	0.0	-7.8	0.0	7.8	0.0	7.8
721	Min Mx	STR 1/ 1	2037.5	0.0	9.6	0.0	-33.9	0.0	33.9	0.0	33.9
	Min My	STR 1/ 23	2038.3	0.0	11.1	0.0	-53.5	0.0	53.5	0.0	53.5
	Min Mz	STR 1/ 9	1706.4	0.0	9.3	0.0	-34.1	-1.8	34.1	1.8	34.1
	Min Mxy	STR 1/ 83	1498.3	0.0	5.7	0.0	-6.8	0.0	6.8	0.0	6.8
	Min Mxz	STR 1/ 1	2037.5	0.0	9.6	0.0	-33.9	0.0	33.9	0.0	33.9
	Min Myz	STR 1/ 83	1498.3	0.0	5.7	0.0	-6.8	0.0	6.8	0.0	6.8
	Max Fx	STR 1/ 192	-1063.5	0.0	3.7	0.0	-9.9	0.0	9.9	0.0	9.9
	Max Fy	STR 1/ 1	-2029.7	0.0	3.0	0.0	-41.0	0.0	41.0	0.0	41.0
	Max Fz	STR 1/ 84	-1105.0	0.0	3.7	0.0	-10.7	0.0	10.7	0.0	10.7
	Max Mx	STR 1/ 1	-2029.7	0.0	3.0	0.0	-41.0	0.0	41.0	0.0	41.0
	Max My	STR 1/ 192	-1063.5	0.0	3.7	0.0	-9.9	0.0	9.9	0.0	9.9
Load No.	Max Mz	STR 1/ 9	-1698.6	0.0	3.4	0.0	-34.4	1.2	34.4	1.2	34.4
22	Max Mxy	STR 1/ 20	-2333.5	0.0	1.4	0.0	-62.1	0.0	62.1	0.0	62.1
	Max Mxz	STR 1/ 8	-1892.5	-0.4	3.2	-1.4	-38.6	-4.2	38.6	4.4	38.8
Member	Max Myz	STR 1/ 20	-2333.5	0.0	1.4	0.0	-62.1	0.0	62.1	0.0	62.1
732	Min Fx	STR 1/ 20	-2333.5	0.0	1.4	0.0	-62.1	0.0	62.1	0.0	62.1
	Min Fy	STR 1/ 7	-1873.6	-0.4	3.2	-1.6	-38.0	-3.0	38.1	3.4	38.1
Joint	Min Fz	STR 1/ 19	-2295.7	0.0	1.4	0.0	-60.9	0.0	60.9	0.0	60.9
722	Min Mx	STR 1/ 7	-1873.6	-0.4	3.2	-1.6	-38.0	-3.0	38.1	3.4	38.1
	Min My	STR 1/ 20	-2333.5	0.0	1.4	0.0	-62.1	0.0	62.1	0.0	62.1
	Min Mz	STR 1/ 8	-1892.5	-0.4	3.2	-1.4	-38.6	-4.2	38.6	4.4	38.8
	Min Mxy	STR 1/ 192	-1063.5	0.0	3.7	0.0	-9.9	0.0	9.9	0.0	9.9
	Min Mxz	STR 1/ 1	-2029.7	0.0	3.0	0.0	-41.0	0.0	41.0	0.0	41.0
	Min Myz	STR 1/ 192	-1063.5	0.0	3.7	0.0	-9.9	0.0	9.9	0.0	9.9

Limit State: STRENGTH I

FR Friction
LF: 1
FR1: CR+SH+PT_EOC
FR2: CR+SH+PT_D10K

TU Uniform Temperature
LF: 0.5
TU1: TU-
TU2: TU+
TU3: TU+Temp. Diff.

DW DL Wearing Surfaces & Utilities
LF1: 1.5
LF2: 0.65
DW1: DW

LL Vehicular Live Load
LF: 1.75
LL1: LL1_Deck
LL2: LL2_Deck
LL3: LL3_Deck
LL4: LL1_Roof
LL5: LL2_Roof
LL6: LL3_Roof
LL7: LL1_Deck Offset
LL8: LL2_Deck Offset
LL9: LL3_Deck Offset

DC DL Structural Components & Attachments
LF1: 1.25
LF2: 0.9
DC1: DC

Combo ID	Load Combinations
STR 1/ 1	1.00*(DW1*1.50 + DC1*1.25 + FR1*1.00 + TU1*0.50 + LL1*1.75)
STR 1/ 2	1.00*(DW1*1.50 + DC1*1.25 + FR1*1.00 + TU1*0.50 + LL2*1.75)
STR 1/ 3	1.00*(DW1*1.50 + DC1*1.25 + FR1*1.00 + TU1*0.50 + LL3*1.75)
STR 1/ 4	1.00*(DW1*1.50 + DC1*1.25 + FR1*1.00 + TU1*0.50 + LL4*1.75)
STR 1/ 5	1.00*(DW1*1.50 + DC1*1.25 + FR1*1.00 + TU1*0.50 + LL5*1.75)
STR 1/ 6	1.00*(DW1*1.50 + DC1*1.25 + FR1*1.00 + TU1*0.50 + LL6*1.75)
STR 1/ 7	1.00*(DW1*1.50 + DC1*1.25 + FR1*1.00 + TU1*0.50 + LL7*1.75)
STR 1/ 8	1.00*(DW1*1.50 + DC1*1.25 + FR1*1.00 + TU1*0.50 + LL8*1.75)
STR 1/ 9	1.00*(DW1*1.50 + DC1*1.25 + FR1*1.00 + TU1*0.50 + LL9*1.75)
STR 1/ 10	1.00*(DW1*1.50 + DC1*1.25 + FR1*1.00 + TU2*0.50 + LL1*1.75)
STR 1/ 11	1.00*(DW1*1.50 + DC1*1.25 + FR1*1.00 + TU2*0.50 + LL2*1.75)
STR 1/ 12	1.00*(DW1*1.50 + DC1*1.25 + FR1*1.00 + TU2*0.50 + LL3*1.75)
STR 1/ 13	1.00*(DW1*1.50 + DC1*1.25 + FR1*1.00 + TU2*0.50 + LL4*1.75)
STR 1/ 14	1.00*(DW1*1.50 + DC1*1.25 + FR1*1.00 + TU2*0.50 + LL5*1.75)
STR 1/ 15	1.00*(DW1*1.50 + DC1*1.25 + FR1*1.00 + TU2*0.50 + LL6*1.75)
STR 1/ 16	1.00*(DW1*1.50 + DC1*1.25 + FR1*1.00 + TU2*0.50 + LL7*1.75)
STR 1/ 17	1.00*(DW1*1.50 + DC1*1.25 + FR1*1.00 + TU2*0.50 + LL8*1.75)
STR 1/ 18	1.00*(DW1*1.50 + DC1*1.25 + FR1*1.00 + TU2*0.50 + LL9*1.75)
STR 1/ 19	1.00*(DW1*1.50 + DC1*1.25 + FR1*1.00 + TU3*0.50 + LL1*1.75)
STR 1/ 20	1.00*(DW1*1.50 + DC1*1.25 + FR1*1.00 + TU3*0.50 + LL2*1.75)

Limit State: STRENGTH I

FR Friction
LF: 1
FR1: CR+SH+PT_EOC
FR2: CR+SH+PT_D10K

TU Uniform Temperature
LF: 0.5
TU1: TU-
TU2: TU+
TU3: TU+Temp. Diff.

DW DL Wearing Surfaces & Utilities
LF1: 1.5
LF2: 0.65
DW1: DW

LL Vehicular Live Load
LF: 1.75
LL1: LL1_Deck
LL2: LL2_Deck
LL3: LL3_Deck
LL4: LL1_Roof
LL5: LL2_Roof
LL6: LL3_Roof
LL7: LL1_Deck Offset
LL8: LL2_Deck Offset
LL9: LL3_Deck Offset

DC DL Structural Components & Attachments
LF1: 1.25
LF2: 0.9
DC1: DC

Load (Row) Number	User's Load ID	Member ID	Joint ID	Fx (kips)	Fy (kips)	Fz (kips)	Mx (ft*kip)	My (ft*kip)	Mz (ft*kip)
1	CR+SH+PT_D10K	702	701	25.1	0	-97.7	0	635.3	0.1
2	CR+SH+PT_D10K	702	702	-25.1	0	97.7	0	644.5	0
3	CR+SH+PT_D10K	705	703	-71.3	0	3.1	0	-105.8	0
4	CR+SH+PT_D10K	705	704	71.3	0	-3.1	0	15	0
5	CR+SH+PT_D10K	708	705	120.2	0	8.8	0	-75.4	0
6	CR+SH+PT_D10K	708	706	-120.2	0	-8.8	0	-21	0
7	CR+SH+PT_D10K	711	707	-194.6	0	-0.2	0	21.9	0
8	CR+SH+PT_D10K	711	708	194.6	0	0.2	0	-17.8	0
9	CR+SH+PT_D10K	714	709	142.4	0	25.7	0	-156.5	0
10	CR+SH+PT_D10K	714	710	-142.4	0	-25.7	0	-147.4	0
11	CR+SH+PT_D10K	717	711	-298.2	0	-0.8	0	14.5	0
12	CR+SH+PT_D10K	717	712	298.2	0	0.8	0	5.4	0
13	CR+SH+PT_D10K	720	713	158.5	0	-16.3	0	112	0
14	CR+SH+PT_D10K	720	714	-158.5	0	16.3	0	105.8	0
15	CR+SH+PT_D10K	723	715	-235.9	0	-1.5	0	14.5	0
16	CR+SH+PT_D10K	723	716	235.9	0	1.5	0	16	0
17	CR+SH+PT_D10K	726	717	117.5	0	-5.7	0	40	0
18	CR+SH+PT_D10K	726	718	-117.5	0	5.7	0	54.4	0
19	CR+SH+PT_D10K	729	719	-121.8	0	-7.1	0	51.7	0
20	CR+SH+PT_D10K	729	720	121.8	0	7.1	0	61.2	0
21	CR+SH+PT_D10K	732	721	-58.6	0	-3.2	0	45.2	0
22	CR+SH+PT_D10K	732	722	58.6	0	3.2	0	27.6	0

Load (Row) Number	User's Load ID	Member ID	Joint ID	Fx (kips)	Fy (kips)	Fz (kips)	Mx (ft*kip)	My (ft*kip)	Mz (ft*kip)
1	CR+SH+PT_EOC	702	701	20.2	0	-72.9	0	383.7	0.1
2	CR+SH+PT_EOC	702	702	-20.2	0	72.9	0	571.3	0
3	CR+SH+PT_EOC	705	703	-285.8	0	2.9	0	-103.4	0
4	CR+SH+PT_EOC	705	704	285.8	0	-2.9	0	19.7	0
5	CR+SH+PT_EOC	708	705	123.1	0	14.3	0	-106.1	0
6	CR+SH+PT_EOC	708	706	-123.1	0	-14.3	0	-50.2	0
7	CR+SH+PT_EOC	711	707	-229.3	0	0.1	0	13.8	0
8	CR+SH+PT_EOC	711	708	229.3	0	-0.1	0	-16.2	0
9	CR+SH+PT_EOC	714	709	120.1	0	25	0	-151.7	0
10	CR+SH+PT_EOC	714	710	-120.1	0	-25	0	-144	0
11	CR+SH+PT_EOC	717	711	-248.2	0	-0.8	0	14.1	0
12	CR+SH+PT_EOC	717	712	248.2	0	0.8	0	5.9	0
13	CR+SH+PT_EOC	720	713	125.4	0	-15.5	0	105.7	0
14	CR+SH+PT_EOC	720	714	-125.4	0	15.5	0	100.8	0
15	CR+SH+PT_EOC	723	715	-186	0	-1.8	0	17.9	0
16	CR+SH+PT_EOC	723	716	186	0	1.8	0	18.5	0
17	CR+SH+PT_EOC	726	717	108.2	0	-5.7	0	42.4	0
18	CR+SH+PT_EOC	726	718	-108.2	0	5.7	0	52.6	0
19	CR+SH+PT_EOC	729	719	-108.6	0	-6.8	0	49.8	0
20	CR+SH+PT_EOC	729	720	108.6	0	6.8	0	58.3	0
21	CR+SH+PT_EOC	732	721	34.6	0	-2.9	0	41.9	0
22	CR+SH+PT_EOC	732	722	-34.6	0	2.9	0	23	0
1	DC	702	701	61.9	0	1.4	0.1	3.4	-0.3
2	DC	702	702	-51.6	0	-1.4	-0.1	-21.8	-0.1
3	DC	705	703	1848.7	0	0.7	-0.1	297.5	0.1
4	DC	705	704	-1839.2	0	20.2	0.1	-13.2	0
5	DC	708	705	-608.9	0	-26.1	0	190.6	0.1
6	DC	708	706	614.4	0	27.8	0	104.6	0
7	DC	711	707	732.1	0	3.7	0	37.7	0.1
8	DC	711	708	-725.8	0	8.8	0	30.6	0
9	DC	714	709	-243.2	0	-16.1	0	83.9	0
10	DC	714	710	249.4	0	16.2	0	106.9	0
11	DC	717	711	27.8	0	3.5	0	31.3	0
12	DC	717	712	-21.5	0	7.3	0	13.8	0
13	DC	720	713	86	0	-6.5	0	59.7	0
14	DC	720	714	-79.5	0	9	0	43.1	0
15	DC	723	715	-587	0	1.2	0	29.4	0
16	DC	723	716	593.4	0	7.2	0	31.7	0
17	DC	726	717	599.6	0	-6.6	0	110.5	0
18	DC	726	718	-593.2	0	12.5	0	48.2	0
19	DC	729	719	-870.9	0	12.6	0	-101.3	0
20	DC	729	720	877.5	0	-7.4	0	-57.1	-0.1
21	DC	732	721	1382.1	0	10.3	0	-66.5	0
22	DC	732	722	-1375.9	0	-0.2	0	-52.3	0
1	DW	702	701	0	0	0	0	0	0
2	DW	702	702	0	0	0	0	0	0
3	DW	705	703	82.2	0	-0.5	0	19.8	0
4	DW	705	704	-82.2	0	0.5	0	-5.3	0
5	DW	708	705	-34	0	-0.5	0	5.3	0
6	DW	708	706	34	0	0.5	0	0.5	0
7	DW	711	707	16.7	0	-0.1	0	2.1	0
8	DW	711	708	-16.7	0	0.1	0	-0.3	0
9	DW	714	709	-13.6	0	0	0	-0.5	0
10	DW	714	710	13.6	0	0	0	0	0
11	DW	717	711	-19.8	0	-0.1	0	1.8	0
12	DW	717	712	19.8	0	0.1	0	-0.3	0
13	DW	720	713	2	0	-0.9	0	6.1	0
14	DW	720	714	-2	0	0.9	0	5.7	0
15	DW	723	715	-46.3	0	-0.1	0	1.5	0
16	DW	723	716	46.3	0	0.1	0	0.8	0
17	DW	726	717	22.2	0	-0.6	0	5.7	0
18	DW	726	718	-22.2	0	0.6	0	3.9	0
19	DW	729	719	-55	0	0.2	0	-2.6	0
20	DW	729	720	55	0	-0.2	0	-1.3	0
21	DW	732	721	48.8	0	0	0	0	0
22	DW	732	722	-48.8	0	0	0	-1	0

Load (Row) Number	User's Load ID	Member ID	Joint ID	Fx (kips)	Fy (kips)	Fz (kips)	Mx (ft*kip)	My (ft*kip)	Mz (ft*kip)
1	LL1_Deck	702	701	0	0	0	0	0	0
2	LL1_Deck	702	702	0	0	0	0	0	0
3	LL1_Deck	705	703	300.7	0	-1.8	0	72.4	0
4	LL1_Deck	705	704	-300.7	0	1.8	0	-19.3	0
5	LL1_Deck	708	705	-124.3	0	-1.9	0	19.5	0
6	LL1_Deck	708	706	124.3	0	1.9	0	1.8	0
7	LL1_Deck	711	707	61	0	-0.2	0	7.6	0
8	LL1_Deck	711	708	-61	0	0.2	0	-1	0
9	LL1_Deck	714	709	-49.6	0	0.2	0	-2	0
10	LL1_Deck	714	710	49.6	0	-0.2	0	0	0
11	LL1_Deck	717	711	-72.5	0	-0.2	0	6.4	0
12	LL1_Deck	717	712	72.5	0	0.2	0	-1	0
13	LL1_Deck	720	713	7.3	0	-3.2	0	22.3	0
14	LL1_Deck	720	714	-7.3	0	3.2	0	20.9	0
15	LL1_Deck	723	715	-169.6	0	-0.4	0	5.6	0
16	LL1_Deck	723	716	169.6	0	0.4	0	2.9	0
17	LL1_Deck	726	717	81.2	0	-2.1	0	20.8	0
18	LL1_Deck	726	718	-81.2	0	2.1	0	14.2	0
19	LL1_Deck	729	719	-201.3	0	0.9	0	-9.5	0
20	LL1_Deck	729	720	201.3	0	-0.9	0	-4.7	0
21	LL1_Deck	732	721	178.4	0	0.2	0	0	0
22	LL1_Deck	732	722	-178.4	0	-0.2	0	-3.5	0
1	LL1_Deck Offset	702	701	0	0	0	0	0	0
2	LL1_Deck Offset	702	702	0	0	0	0	0	0
3	LL1_Deck Offset	705	703	150.4	-3.1	-0.9	32.6	36.2	-52.8
4	LL1_Deck Offset	705	704	-150.4	3.1	0.9	-32.6	-9.7	-37.7
5	LL1_Deck Offset	708	705	-62.1	-3.5	-1	2.4	9.8	-11.8
6	LL1_Deck Offset	708	706	62.1	3.5	1	-2.4	0.9	-26.8
7	LL1_Deck Offset	711	707	30.5	-0.5	-0.1	-6.2	3.8	0.2
8	LL1_Deck Offset	711	708	-30.5	0.5	0.1	6.2	-0.5	-14.6
9	LL1_Deck Offset	714	709	-24.8	7	0.1	4.1	-1	87.9
10	LL1_Deck Offset	714	710	24.8	-7	-0.1	-4.1	0	-5.3
11	LL1_Deck Offset	717	711	-36.3	0.8	-0.1	-19	3.2	26.8
12	LL1_Deck Offset	717	712	36.3	-0.8	0.1	19	-0.5	-8.9
13	LL1_Deck Offset	720	713	3.6	-9.5	-1.6	20.4	11.2	-111.8
14	LL1_Deck Offset	720	714	-3.6	9.5	1.6	-20.4	10.5	-14.9
15	LL1_Deck Offset	723	715	-84.8	2.9	-0.2	-23.4	2.8	56
16	LL1_Deck Offset	723	716	84.8	-2.9	0.2	23.4	1.4	2.1
17	LL1_Deck Offset	726	717	40.6	-4.7	-1.1	21.2	10.4	-57.6
18	LL1_Deck Offset	726	718	-40.6	4.7	1.1	-21.2	7.1	-21
19	LL1_Deck Offset	729	719	-100.7	6.3	0.4	-17.4	-4.8	84.5
20	LL1_Deck Offset	729	720	100.7	-6.3	-0.4	17.4	-2.3	15.6
21	LL1_Deck Offset	732	721	89.2	0.2	0.1	0.9	0	5.4
22	LL1_Deck Offset	732	722	-89.2	-0.2	-0.1	-0.9	-1.8	-1.7
1	LL1_Roof	702	701	0	0	0	0	0	0
2	LL1_Roof	702	702	0	0	0	0	0	0
3	LL1_Roof	705	703	43.6	0	2.6	0	-10.2	0
4	LL1_Roof	705	704	-43.6	0	-2.6	0	-64.5	0
5	LL1_Roof	708	705	-2.4	0	4.3	0	-10.2	0
6	LL1_Roof	708	706	2.4	0	-4.3	0	-37.2	0
7	LL1_Roof	711	707	1	0	-0.2	0	2.7	0
8	LL1_Roof	711	708	-1	0	0.2	0	3.8	0
9	LL1_Roof	714	709	2.2	0	-0.6	0	0.9	0
10	LL1_Roof	714	710	-2.2	0	0.6	0	6.3	0
11	LL1_Roof	717	711	-5.9	0	0.1	0	-0.5	0
12	LL1_Roof	717	712	5.9	0	-0.1	0	-1.1	0
13	LL1_Roof	720	713	9.5	0	-0.4	0	2.3	0
14	LL1_Roof	720	714	-9.5	0	0.4	0	2.8	0
15	LL1_Roof	723	715	-14.6	0	0	0	0.3	0
16	LL1_Roof	723	716	14.6	0	0	0	0.2	0
17	LL1_Roof	726	717	16.7	0	-0.2	0	2.1	0
18	LL1_Roof	726	718	-16.7	0	0.2	0	0.9	0
19	LL1_Roof	729	719	-15.1	0	0.2	0	-2.3	0
20	LL1_Roof	729	720	15.1	0	-0.2	0	-1.6	0
21	LL1_Roof	732	721	23.7	0	0.1	0	-1	0
22	LL1_Roof	732	722	-23.7	0	-0.1	0	-0.9	0

Load (Row) Number	User's Load ID	Member ID	Joint ID	Fx (kips)	Fy (kips)	Fz (kips)	Mx (ft*kip)	My (ft*kip)	Mz (ft*kip)
1	LL2_Deck	702	701	0	0	0	0	0	0
2	LL2_Deck	702	702	0	0	0	0	0	0
3	LL2_Deck	705	703	352.3	0	-1.9	0	77.2	0
4	LL2_Deck	705	704	-352.3	0	1.9	0	-21.9	0
5	LL2_Deck	708	705	-139.4	0	-2.9	0	26.5	0.1
6	LL2_Deck	708	706	139.4	0	2.9	0	5.5	0
7	LL2_Deck	711	707	93.4	0	-0.3	0	8.8	0
8	LL2_Deck	711	708	-93.4	0	0.3	0	-1.2	0
9	LL2_Deck	714	709	-58.8	0	-0.7	0	3.5	0
10	LL2_Deck	714	710	58.8	0	0.7	0	5	0
11	LL2_Deck	717	711	-53.5	0	-0.3	0	7.5	0
12	LL2_Deck	717	712	53.5	0	0.3	0	-1.5	0
13	LL2_Deck	720	713	4.6	0	-3.1	0	21.3	0
14	LL2_Deck	720	714	-4.6	0	3.1	0	19.7	0
15	LL2_Deck	723	715	-165.5	0	-0.5	0	6.4	0
16	LL2_Deck	723	716	165.5	0	0.5	0	2.8	0
17	LL2_Deck	726	717	89.8	0	-2.1	0	21.8	0
18	LL2_Deck	726	718	-89.8	0	2.1	0	13.9	0
19	LL2_Deck	729	719	-209.3	0	1.1	0	-10.7	0
20	LL2_Deck	729	720	209.3	0	-1.1	0	-6.1	0
21	LL2_Deck	732	721	200	0	0.2	0	0.3	0
22	LL2_Deck	732	722	-200	0	-0.2	0	-4.2	0
1	LL2_Deck Offset	702	701	0	0	0	0	0	0
2	LL2_Deck Offset	702	702	0	0	0	0	0	0
3	LL2_Deck Offset	705	703	176.1	-3.2	-0.9	34.6	38.6	-55.1
4	LL2_Deck Offset	705	704	-176.1	3.2	0.9	-34.6	-11	-38.7
5	LL2_Deck Offset	708	705	-69.7	-4	-1.5	2.9	13.2	-16.6
6	LL2_Deck Offset	708	706	69.7	4	1.5	-2.9	2.8	-27.6
7	LL2_Deck Offset	711	707	46.7	-0.6	-0.1	-5.6	4.4	-0.9
8	LL2_Deck Offset	711	708	-46.7	0.6	0.1	5.6	-0.6	-15.1
9	LL2_Deck Offset	714	709	-29.4	6.6	-0.4	4.2	1.8	84
10	LL2_Deck Offset	714	710	29.4	-6.6	0.4	-4.2	2.5	-5.9
11	LL2_Deck Offset	717	711	-26.8	0.7	-0.1	-18.6	3.8	25.9
12	LL2_Deck Offset	717	712	26.8	-0.7	0.1	18.6	-0.7	-9.7
13	LL2_Deck Offset	720	713	2.3	-9.2	-1.5	20.3	10.7	-108.3
14	LL2_Deck Offset	720	714	-2.3	9.2	1.5	-20.3	9.9	-13.8
15	LL2_Deck Offset	723	715	-82.8	2.7	-0.2	-23.2	3.2	54.9
16	LL2_Deck Offset	723	716	82.8	-2.7	0.2	23.2	1.4	0.3
17	LL2_Deck Offset	726	717	44.9	-4.5	-1.1	21.1	10.9	-55.1
18	LL2_Deck Offset	726	718	-44.9	4.5	1.1	-21.1	7	-20.2
19	LL2_Deck Offset	729	719	-104.7	6	0.5	-17.1	-5.3	83.4
20	LL2_Deck Offset	729	720	104.7	-6	-0.5	17.1	-3.1	12.2
21	LL2_Deck Offset	732	721	100	0.2	0.1	0.8	0.2	6.5
22	LL2_Deck Offset	732	722	-100	-0.2	-0.1	-0.8	-2.1	-2.4
1	LL2_Roof	702	701	0	0	0	0	0	0
2	LL2_Roof	702	702	0	0	0	0	0	0
3	LL2_Roof	705	703	49	0	2.6	0	-9.7	0
4	LL2_Roof	705	704	-49	0	-2.6	0	-64.8	0
5	LL2_Roof	708	705	-3.9	0	4.2	0	-9.5	0
6	LL2_Roof	708	706	3.9	0	-4.2	0	-36.8	0
7	LL2_Roof	711	707	4.3	0	-0.2	0	2.8	0
8	LL2_Roof	711	708	-4.3	0	0.2	0	3.8	0
9	LL2_Roof	714	709	1.3	0	-0.7	0	1.4	0
10	LL2_Roof	714	710	-1.3	0	0.7	0	6.8	0
11	LL2_Roof	717	711	-4.1	0	0.1	0	-0.4	0
12	LL2_Roof	717	712	4.1	0	-0.1	0	-1.2	0
13	LL2_Roof	720	713	9.4	0	-0.4	0	2.2	0
14	LL2_Roof	720	714	-9.4	0	0.4	0	2.6	0
15	LL2_Roof	723	715	-14.5	0	0	0	0.4	0
16	LL2_Roof	723	716	14.5	0	0	0	0.2	0
17	LL2_Roof	726	717	18.1	0	-0.2	0	2.3	0
18	LL2_Roof	726	718	-18.1	0	0.2	0	0.9	0
19	LL2_Roof	729	719	-16.3	0	0.3	0	-2.6	0
20	LL2_Roof	729	720	16.3	0	-0.3	0	-1.8	0
21	LL2_Roof	732	721	26.9	0	0.1	0	-1.2	0
22	LL2_Roof	732	722	-26.9	0	-0.1	0	-1.1	0

Load (Row) Number	User's Load ID	Member ID	Joint ID	Fx (kips)	Fy (kips)	Fz (kips)	Mx (ft*kip)	My (ft*kip)	Mz (ft*kip)
1	LL3_Deck	702	701	0	0	0	0	0	0
2	LL3_Deck	702	702	0	0	0	0	0	0
3	LL3_Deck	705	703	-51.6	0	0.1	0	-4.9	0
4	LL3_Deck	705	704	51.6	0	-0.1	0	2.6	0
5	LL3_Deck	708	705	15.2	0	1	0	-7	-0.1
6	LL3_Deck	708	706	-15.2	0	-1	0	-3.8	0
7	LL3_Deck	711	707	-32.4	0	0	0	-1.1	0
8	LL3_Deck	711	708	32.4	0	0	0	0.2	0
9	LL3_Deck	714	709	9.1	0	0.9	0	-5.5	0
10	LL3_Deck	714	710	-9.1	0	-0.9	0	-5	0
11	LL3_Deck	717	711	-19	0	0	0	-1.1	0
12	LL3_Deck	717	712	19	0	0	0	0.5	0
13	LL3_Deck	720	713	2.7	0	-0.2	0	1	0
14	LL3_Deck	720	714	-2.7	0	0.2	0	1.2	0
15	LL3_Deck	723	715	-4	0	0	0	-0.8	0
16	LL3_Deck	723	716	4	0	0	0	0.1	0
17	LL3_Deck	726	717	-8.6	0	0	0	-1	0
18	LL3_Deck	726	718	8.6	0	0	0	0.3	0
19	LL3_Deck	729	719	8	0	-0.2	0	1.2	0
20	LL3_Deck	729	720	-8	0	0.2	0	1.5	0
21	LL3_Deck	732	721	-21.6	0	0	0	-0.3	0
22	LL3_Deck	732	722	21.6	0	0	0	0.7	0
1	LL3_Deck Offset	702	701	0	0	0	0	0	0
2	LL3_Deck Offset	702	702	0	0	0	0	0	0
3	LL3_Deck Offset	705	703	-25.8	0.1	0	-2	-2.4	2.3
4	LL3_Deck Offset	705	704	25.8	-0.1	0	2	1.3	0.9
5	LL3_Deck Offset	708	705	7.6	0.5	0.5	-0.6	-3.5	4.8
6	LL3_Deck Offset	708	706	-7.6	-0.5	-0.5	0.6	-1.9	0.7
7	LL3_Deck Offset	711	707	-16.2	0.1	0	-0.6	-0.6	1
8	LL3_Deck Offset	711	708	16.2	-0.1	0	0.6	0.1	0.4
9	LL3_Deck Offset	714	709	4.6	0.4	0.4	-0.2	-2.7	3.9
10	LL3_Deck Offset	714	710	-4.6	-0.4	-0.4	0.2	-2.5	0.6
11	LL3_Deck Offset	717	711	-9.5	0.1	0	-0.4	-0.5	0.9
12	LL3_Deck Offset	717	712	9.5	-0.1	0	0.4	0.2	0.8
13	LL3_Deck Offset	720	713	1.4	-0.3	-0.1	0.1	0.5	-3.5
14	LL3_Deck Offset	720	714	-1.4	0.3	0.1	-0.1	0.6	-1.1
15	LL3_Deck Offset	723	715	-2	0.1	0	-0.2	-0.4	1.1
16	LL3_Deck Offset	723	716	2	-0.1	0	0.2	0.1	1.8
17	LL3_Deck Offset	726	717	-4.3	-0.2	0	0.1	-0.5	-2.5
18	LL3_Deck Offset	726	718	4.3	0.2	0	-0.1	0.2	-0.8
19	LL3_Deck Offset	729	719	4	0.3	-0.1	-0.3	0.6	1.1
20	LL3_Deck Offset	729	720	-4	-0.3	0.1	0.3	0.7	3.4
21	LL3_Deck Offset	732	721	-10.8	0	0	0	-0.1	-1
22	LL3_Deck Offset	732	722	10.8	0	0	0	0.3	0.7
1	LL3_Roof	702	701	0	0	0	0	0	0
2	LL3_Roof	702	702	0	0	0	0	0	0
3	LL3_Roof	705	703	-5.4	0	0	0	-0.5	0
4	LL3_Roof	705	704	5.4	0	0	0	0.3	0
5	LL3_Roof	708	705	1.6	0	0.1	0	-0.7	0
6	LL3_Roof	708	706	-1.6	0	-0.1	0	-0.4	0
7	LL3_Roof	711	707	-3.3	0	0	0	-0.1	0
8	LL3_Roof	711	708	3.3	0	0	0	0	0
9	LL3_Roof	714	709	0.9	0	0.1	0	-0.5	0
10	LL3_Roof	714	710	-0.9	0	-0.1	0	-0.5	0
11	LL3_Roof	717	711	-1.8	0	0	0	-0.1	0
12	LL3_Roof	717	712	1.8	0	0	0	0.1	0
13	LL3_Roof	720	713	0.1	0	0	0	0.1	0
14	LL3_Roof	720	714	-0.1	0	0	0	0.1	0
15	LL3_Roof	723	715	-0.1	0	0	0	-0.1	0
16	LL3_Roof	723	716	0.1	0	0	0	0	0
17	LL3_Roof	726	717	-1.4	0	0	0	-0.2	0
18	LL3_Roof	726	718	1.4	0	0	0	0	0
19	LL3_Roof	729	719	1.2	0	0	0	0.3	0
20	LL3_Roof	729	720	-1.2	0	0	0	0.2	0
21	LL3_Roof	732	721	-3.2	0	0	0	0.2	0
22	LL3_Roof	732	722	3.2	0	0	0	0.2	0

Load (Row) Number	User's Load ID	Member ID	Joint ID	Fx (kips)	Fy (kips)	Fz (kips)	Mx (ft*kip)	My (ft*kip)	Mz (ft*kip)
1	TU-	702	701	0	0	0	0	0	0
2	TU-	702	702	0	0	0	0	0	0
3	TU-	705	703	-167	0	-0.2	0	-6.3	0
4	TU-	705	704	167	0	0.2	0	11.5	0
5	TU-	708	705	32	0	3	0	-20.8	0
6	TU-	708	706	-32	0	-3	0	-11.9	0
7	TU-	711	707	-75.4	0	0.2	0	-4.7	0
8	TU-	711	708	75.4	0	-0.2	0	0	0
9	TU-	714	709	7.9	0	1.5	0	-8.3	0
10	TU-	714	710	-7.9	0	-1.5	0	-9.3	0
11	TU-	717	711	-17.3	0	0.1	0	-2.2	0
12	TU-	717	712	17.3	0	-0.1	0	0.9	0
13	TU-	720	713	-14.9	0	0	0	-0.6	0
14	TU-	720	714	14.9	0	0	0	0.1	0
15	TU-	723	715	27.7	0	0.2	0	-2.4	0
16	TU-	723	716	-27.7	0	-0.2	0	-1.2	0
17	TU-	726	717	-60	0	0.9	0	-11.7	0
18	TU-	726	718	60	0	-0.9	0	-2.7	0
19	TU-	729	719	47.4	0	-1.3	0	14.7	0
20	TU-	729	720	-47.4	0	1.3	0	6	0
21	TU-	732	721	-220.3	0	-1.4	0	14.7	0
22	TU-	732	722	220.3	0	1.4	0	18	0
1	TU+	702	701	0	0	0	0	0	0
2	TU+	702	702	0	0	0	0	0	0
3	TU+	705	703	167	0	0.2	0	6.3	0
4	TU+	705	704	-167	0	-0.2	0	-11.5	0
5	TU+	708	705	-32	0	-3	0	20.8	0
6	TU+	708	706	32	0	3	0	11.9	0
7	TU+	711	707	75.4	0	-0.2	0	4.7	0
8	TU+	711	708	-75.4	0	0.2	0	0	0
9	TU+	714	709	-7.9	0	-1.5	0	8.3	0
10	TU+	714	710	7.9	0	1.5	0	9.3	0
11	TU+	717	711	17.3	0	-0.1	0	2.2	0
12	TU+	717	712	-17.3	0	0.1	0	-0.9	0
13	TU+	720	713	14.9	0	0	0	0.6	0
14	TU+	720	714	-14.9	0	0	0	-0.1	0
15	TU+	723	715	-27.7	0	-0.2	0	2.4	0
16	TU+	723	716	27.7	0	0.2	0	1.2	0
17	TU+	726	717	60	0	-0.9	0	11.7	0
18	TU+	726	718	-60	0	0.9	0	2.7	0
19	TU+	729	719	-47.4	0	1.3	0	-14.7	0
20	TU+	729	720	47.4	0	-1.3	0	-6	0
21	TU+	732	721	220.3	0	1.4	0	-14.7	0
22	TU+	732	722	-220.3	0	-1.4	0	-18	0
1	TU+Temp. Diff.	702	701	0	0	0	0	0	0
2	TU+Temp. Diff.	702	702	0	0	0	0	0	0
3	TU+Temp. Diff.	705	703	338.8	0	-0.1	0	24.9	0
4	TU+Temp. Diff.	705	704	-338.8	0	0.1	0	-21.2	0
5	TU+Temp. Diff.	708	705	-58.7	0	-5.4	0	38	0
6	TU+Temp. Diff.	708	706	58.7	0	5.4	0	21	0
7	TU+Temp. Diff.	711	707	133.9	0	-0.3	0	8.5	0
8	TU+Temp. Diff.	711	708	-133.9	0	0.3	0	0	0
9	TU+Temp. Diff.	714	709	-3.6	0	-2.5	0	13.5	0
10	TU+Temp. Diff.	714	710	3.6	0	2.5	0	16.3	0
11	TU+Temp. Diff.	717	711	10.3	0	-0.1	0	3.9	0
12	TU+Temp. Diff.	717	712	-10.3	0	0.1	0	-1.4	0
13	TU+Temp. Diff.	720	713	44.5	0	-0.5	0	5	0
14	TU+Temp. Diff.	720	714	-44.5	0	0.5	0	2.3	0
15	TU+Temp. Diff.	723	715	-75.7	0	-0.2	0	2.1	0
16	TU+Temp. Diff.	723	716	75.7	0	0.2	0	1.6	0
17	TU+Temp. Diff.	726	717	121	0	-1.3	0	17.3	0
18	TU+Temp. Diff.	726	718	-121	0	1.3	0	3.6	0
19	TU+Temp. Diff.	729	719	-102.2	0	2.6	0	-26	0
20	TU+Temp. Diff.	729	720	102.2	0	-2.6	0	-15.1	0
21	TU+Temp. Diff.	732	721	311.6	0	1.9	0	-20.3	0
22	TU+Temp. Diff.	732	722	-311.6	0	-1.9	0	-21.7	0

AASHTO Limit State: STR 3 - STRENGTH III

Max/ Min ID	Load Num	Member Num	Joint Num	Limit State/ Combo ID	Fx (kips)	Fy (kips)	Fz (kips)	Mx (ft*kip)	My (ft*kip)	Mz (ft*kip)	Mxy (ft*kip)	Mxz (ft*kip)	Myz (ft*kip)
Max Fx	3	705	703	STR 3/ 59	2605.5	-2.9	3.6	53.6	306.8	-52.9	311.5	75.4	311.4
Max Fy	2	702	702	STR 3/ 4	-84.7	124.0	70.7	-0.1	537.2	381.0	537.2	381.0	658.6
Max Fz	2	702	702	STR 3/ 153	-71.5	-69.4	113.9	-0.1	723.3	-684.4	723.3	684.4	995.8
Max Mx	3	705	703	STR 3/ 130	1258.1	-10.9	-0.3	181.2	181.4	-188.1	256.4	261.2	261.3
Max My	1	702	701	STR 3/ 33	102.5	67.6	-112.8	0.1	753.9	1524.7	753.9	1524.7	1701.0
Max Mz	1	702	701	STR 3/ 123	75.9	67.6	-88.4	0.1	501.1	1524.9	501.1	1524.9	1605.1
Max Mxy	1	702	701	STR 3/ 33	102.5	67.6	-112.8	0.1	753.9	1524.7	753.9	1524.7	1701.0
Max Mxz	1	702	701	STR 3/ 4	97.6	-125.4	-69.6	0.1	382.9	-1980.2	382.9	1980.2	2016.8
Max Myz	1	702	701	STR 3/ 38	102.5	-125.4	-97.5	0.1	644.6	-1980.2	644.6	1980.2	2082.4
Min Fx	4	705	704	STR 3/ 59	-2590.7	1.4	21.3	-53.6	-49.9	-11.5	73.2	54.8	51.2
Min Fy	1	702	701	STR 3/ 4	97.6	-125.4	-69.6	0.1	382.9	-1980.2	382.9	1980.2	2016.8
Min Fz	1	702	701	STR 3/ 153	80.8	67.6	-113.2	0.1	752.7	1524.9	752.7	1524.9	1700.5
Min Mx	4	705	704	STR 3/ 130	-1249.5	6.0	19.1	-181.2	102.2	-58.0	208.1	190.3	117.5
Min My	19	729	719	STR 3/ 25	-1340.3	-0.7	11.8	9.9	-103.7	-12.3	104.1	15.8	104.4
Min Mz	1	702	701	STR 3/ 4	97.6	-125.4	-69.6	0.1	382.9	-1980.2	382.9	1980.2	2016.8
Min Mxy	10	714	710	STR 3/ 29	234.7	2.5	-3.4	-3.8	-1.2	24.8	4.0	25.1	24.8
Min Mxz	13	720	713	STR 3/ 10	212.8	-5.0	-23.4	3.2	178.5	6.9	178.6	7.6	178.7
Min Myz	8	711	708	STR 3/ 159	-496.8	0.1	7.3	-16.8	3.1	-1.1	17.1	16.8	3.3

AASHTO Limit State: STR 3 - STRENGTH III

	Max/ Min ID	Combo ID	Fx (kips)	Fy (kips)	Fz (kips)	Mx (ft*kip)	My (ft*kip)	Mz (ft*kip)	Mxy (ft*kip)	Mxz (ft*kip)	Myz (ft*kip)
	Max Fx	STR 3/ 31	102.5	43.8	-96.0	0.1	639.6	809.6	639.6	809.6	1031.8
	Max Fy	STR 3/ 3	97.6	67.6	-88.0	0.1	502.3	1524.7	502.3	1524.7	1605.4
	Max Fz	STR 3/ 7	97.6	67.6	-54.4	0.1	273.6	1524.7	273.6	1524.7	1549.1
	Max Mx	STR 3/ 1	97.6	43.8	-71.2	0.1	388.0	809.6	388.0	809.6	897.8
	Max My	STR 3/ 33	102.5	67.6	-112.8	0.1	753.9	1524.7	753.9	1524.7	1701.0
Load No.	Max Mz	STR 3/ 123	75.9	67.6	-88.4	0.1	501.1	1524.9	501.1	1524.9	1605.1
1	Max Mxy	STR 3/ 33	102.5	67.6	-112.8	0.1	753.9	1524.7	753.9	1524.7	1701.0
	Max Mxz	STR 3/ 4	97.6	-125.4	-69.6	0.1	382.9	-1980.2	382.9	1980.2	2016.8
Member	Max Myz	STR 3/ 38	102.5	-125.4	-97.5	0.1	644.6	-1980.2	644.6	1980.2	2082.4
702	Min Fx	STR 3/ 121	75.9	43.8	-71.6	0.1	386.8	809.7	386.8	809.7	897.4
	Min Fy	STR 3/ 4	97.6	-125.4	-69.6	0.1	382.9	-1980.2	382.9	1980.2	2016.8
Joint	Min Fz	STR 3/ 153	80.8	67.6	-113.2	0.1	752.7	1524.9	752.7	1524.9	1700.5
701	Min Mx	STR 3/ 121	75.9	43.8	-71.6	0.1	386.8	809.7	386.8	809.7	897.4
	Min My	STR 3/ 127	75.9	67.6	-54.8	0.1	272.4	1524.9	272.4	1524.9	1549.0
	Min Mz	STR 3/ 4	97.6	-125.4	-69.6	0.1	382.9	-1980.2	382.9	1980.2	2016.8
	Min Mxy	STR 3/ 127	75.9	67.6	-54.8	0.1	272.4	1524.9	272.4	1524.9	1549.0
	Min Mxz	STR 3/ 2	97.6	7.7	-70.6	0.1	385.6	151.9	385.6	151.9	414.4
	Min Myz	STR 3/ 122	75.9	7.7	-71.1	0.1	384.4	152.0	384.4	152.0	413.3
	Max Fx	STR 3/ 121	-66.6	-46.1	71.6	-0.1	551.7	-244.0	551.7	244.0	603.2
	Max Fy	STR 3/ 4	-84.7	124.0	70.7	-0.1	537.2	381.0	537.2	381.0	658.6
	Max Fz	STR 3/ 153	-71.5	-69.4	113.9	-0.1	723.3	-684.4	723.3	684.4	995.8
	Max Mx	STR 3/ 121	-66.6	-46.1	71.6	-0.1	551.7	-244.0	551.7	244.0	603.2
	Max My	STR 3/ 153	-71.5	-69.4	113.9	-0.1	723.3	-684.4	723.3	684.4	995.8
Load No.	Max Mz	STR 3/ 124	-66.6	124.0	71.2	-0.1	544.8	381.0	544.8	381.0	664.8
2	Max Mxy	STR 3/ 153	-71.5	-69.4	113.9	-0.1	723.3	-684.4	723.3	684.4	995.8
	Max Mxz	STR 3/ 3	-84.7	-69.4	88.7	-0.1	642.5	-684.4	642.5	684.4	938.7
Member	Max Myz	STR 3/ 153	-71.5	-69.4	113.9	-0.1	723.3	-684.4	723.3	684.4	995.8
702	Min Fx	STR 3/ 31	-89.6	-46.1	96.0	-0.1	617.3	-244.0	617.3	244.0	663.7
	Min Fy	STR 3/ 3	-84.7	-69.4	88.7	-0.1	642.5	-684.4	642.5	684.4	938.7
Joint	Min Fz	STR 3/ 7	-84.7	-69.4	53.7	-0.1	445.6	-684.4	445.6	684.4	816.7
702	Min Mx	STR 3/ 1	-84.7	-46.1	71.2	-0.1	544.1	-244.0	544.1	244.0	596.3
	Min My	STR 3/ 7	-84.7	-69.4	53.7	-0.1	445.6	-684.4	445.6	684.4	816.7
	Min Mz	STR 3/ 3	-84.7	-69.4	88.7	-0.1	642.5	-684.4	642.5	684.4	938.7
	Min Mxy	STR 3/ 7	-84.7	-69.4	53.7	-0.1	445.6	-684.4	445.6	684.4	816.7
	Min Mxz	STR 3/ 122	-66.6	-9.7	71.4	-0.1	548.6	-39.6	548.6	39.6	550.0
	Min Myz	STR 3/ 5	-84.7	62.0	64.7	-0.1	497.0	190.4	497.0	190.4	532.2

AASHTO Limit State: STR 3 - STRENGTH III

	Max/ Min ID	Combo ID	Fx (kips)	Fy (kips)	Fz (kips)	Mx (ft*kip)	My (ft*kip)	Mz (ft*kip)	Mxy (ft*kip)	Mxz (ft*kip)	Myz (ft*kip)
	Max Fx	STR 3/ 59	2605.5	-2.9	3.6	53.6	306.8	-52.9	311.5	75.4	311.4
	Max Fy	STR 3/ 5	1991.7	-2.9	2.5	53.6	296.4	-52.9	301.2	75.4	301.1
	Max Fz	STR 3/ 109	2449.7	-2.9	4.2	53.6	280.7	-52.9	285.8	75.4	285.6
	Max Mx	STR 3/ 130	1258.1	-10.9	-0.3	181.2	181.4	-188.1	256.4	261.2	261.3
	Max My	STR 3/ 25	2244.6	-2.9	2.6	53.6	312.0	-52.9	316.6	75.4	316.5
Load No.	Max Mz	STR 3/ 5	1991.7	-2.9	2.5	53.6	296.4	-52.9	301.2	75.4	301.1
3	Max Mxy	STR 3/ 30	2158.0	-10.9	0.0	181.2	301.1	-188.0	351.4	261.1	355.0
	Max Mxz	STR 3/ 130	1258.1	-10.9	-0.3	181.2	181.4	-188.1	256.4	261.2	261.3
Member	Max Myz	STR 3/ 30	2158.0	-10.9	0.0	181.2	301.1	-188.0	351.4	261.1	355.0
705	Min Fx	STR 3/ 190	1188.2	-10.9	0.2	181.2	164.6	-188.1	244.8	261.2	249.9
	Min Fy	STR 3/ 10	1905.1	-10.9	0.0	181.2	285.5	-188.0	338.1	261.1	341.9
Joint	Min Fz	STR 3/ 130	1258.1	-10.9	-0.3	181.2	181.4	-188.1	256.4	261.2	261.3
703	Min Mx	STR 3/ 5	1991.7	-2.9	2.5	53.6	296.4	-52.9	301.2	75.4	301.1
	Min My	STR 3/ 220	1402.7	-10.9	0.4	181.2	162.2	-188.1	243.2	261.2	248.3
	Min Mz	STR 3/ 130	1258.1	-10.9	-0.3	181.2	181.4	-188.1	256.4	261.2	261.3
	Min Mxy	STR 3/ 219	1635.7	-2.9	3.7	53.7	170.3	-53.0	178.5	75.4	178.3
	Min Mxz	STR 3/ 5	1991.7	-2.9	2.5	53.6	296.4	-52.9	301.2	75.4	301.1
	Min Myz	STR 3/ 219	1635.7	-2.9	3.7	53.7	170.3	-53.0	178.5	75.4	178.3
	Max Fx	STR 3/ 190	-1179.7	6.0	18.6	-181.2	106.7	-58.0	210.3	190.3	121.4
	Max Fy	STR 3/ 10	-1893.3	6.0	26.1	-181.2	97.6	-58.0	205.8	190.2	113.5
	Max Fz	STR 3/ 10	-1893.3	6.0	26.1	-181.2	97.6	-58.0	205.8	190.2	113.5
	Max Mx	STR 3/ 5	-1982.7	1.4	24.9	-53.6	30.8	-11.5	61.9	54.8	32.9
	Max My	STR 3/ 190	-1179.7	6.0	18.6	-181.2	106.7	-58.0	210.3	190.3	121.4
Load No.	Max Mz	STR 3/ 5	-1982.7	1.4	24.9	-53.6	30.8	-11.5	61.9	54.8	32.9
4	Max Mxy	STR 3/ 190	-1179.7	6.0	18.6	-181.2	106.7	-58.0	210.3	190.3	121.4
	Max Mxz	STR 3/ 130	-1249.5	6.0	19.1	-181.2	102.2	-58.0	208.1	190.3	117.5
Member	Max Myz	STR 3/ 190	-1179.7	6.0	18.6	-181.2	106.7	-58.0	210.3	190.3	121.4
705	Min Fx	STR 3/ 59	-2590.7	1.4	21.3	-53.6	-49.9	-11.5	73.2	54.8	51.2
	Min Fy	STR 3/ 5	-1982.7	1.4	24.9	-53.6	30.8	-11.5	61.9	54.8	32.9
Joint	Min Fz	STR 3/ 229	-1791.2	1.4	13.6	-53.7	-35.9	-11.5	64.6	54.9	37.7
704	Min Mx	STR 3/ 130	-1249.5	6.0	19.1	-181.2	102.2	-58.0	208.1	190.3	117.5
	Min My	STR 3/ 59	-2590.7	1.4	21.3	-53.6	-49.9	-11.5	73.2	54.8	51.2
	Min Mz	STR 3/ 10	-1893.3	6.0	26.1	-181.2	97.6	-58.0	205.8	190.2	113.5
	Min Mxy	STR 3/ 55	-2450.1	1.4	24.6	-53.6	9.8	-11.5	54.5	54.8	15.1
	Min Mxz	STR 3/ 5	-1982.7	1.4	24.9	-53.6	30.8	-11.5	61.9	54.8	32.9
	Min Myz	STR 3/ 55	-2450.1	1.4	24.6	-53.6	9.8	-11.5	54.5	54.8	15.1

AASHTO Limit State: STR 3 - STRENGTH III

	Max/ Min ID	Combo ID	Fx (kips)	Fy (kips)	Fz (kips)	Mx (ft*kip)	My (ft*kip)	Mz (ft*kip)	Mxy (ft*kip)	Mxz (ft*kip)	Myz (ft*kip)
	Max Fx	STR 3/ 190	-386.9	-23.5	-13.5	53.5	66.5	-284.1	85.3	289.1	291.8
	Max Fy	STR 3/ 5	-648.5	-7.8	-17.2	16.4	122.7	-96.6	123.8	98.0	156.2
	Max Fz	STR 3/ 184	-410.9	-13.4	-7.6	26.0	52.7	-155.9	58.8	158.0	164.6
	Max Mx	STR 3/ 10	-628.9	-23.5	-23.0	53.5	137.7	-284.1	147.7	289.1	315.7
	Max My	STR 3/ 60	-677.2	-23.5	-32.7	53.5	197.8	-284.1	204.9	289.1	346.1
Load No.	Max Mz	STR 3/ 9	-697.5	-7.8	-18.0	16.4	136.7	-96.5	137.7	97.9	167.3
5	Max Mxy	STR 3/ 60	-677.2	-23.5	-32.7	53.5	197.8	-284.1	204.9	289.1	346.1
	Max Mxz	STR 3/ 130	-415.8	-23.5	-13.9	53.5	71.0	-284.1	88.9	289.1	292.8
Member	Max Myz	STR 3/ 60	-677.2	-23.5	-32.7	53.5	197.8	-284.1	204.9	289.1	346.1
708	Min Fx	STR 3/ 59	-745.8	-7.8	-27.7	16.4	196.8	-96.5	197.5	97.9	219.2
	Min Fy	STR 3/ 10	-628.9	-23.5	-23.0	53.5	137.7	-284.1	147.7	289.1	315.7
Joint	Min Fz	STR 3/ 60	-677.2	-23.5	-32.7	53.5	197.8	-284.1	204.9	289.1	346.1
705	Min Mx	STR 3/ 5	-648.5	-7.8	-17.2	16.4	122.7	-96.6	123.8	98.0	156.2
	Min My	STR 3/ 185	-406.5	-7.8	-7.6	16.4	51.5	-96.7	54.0	98.0	109.5
	Min Mz	STR 3/ 130	-415.8	-23.5	-13.9	53.5	71.0	-284.1	88.9	289.1	292.8
	Min Mxy	STR 3/ 185	-406.5	-7.8	-7.6	16.4	51.5	-96.7	54.0	98.0	109.5
	Min Mxz	STR 3/ 9	-697.5	-7.8	-18.0	16.4	136.7	-96.5	137.7	97.9	167.3
	Min Myz	STR 3/ 185	-406.5	-7.8	-7.6	16.4	51.5	-96.7	54.0	98.0	109.5
	Max Fx	STR 3/ 59	753.1	7.3	28.7	-16.4	112.9	13.7	114.1	21.4	113.7
	Max Fy	STR 3/ 10	635.8	21.7	25.2	-53.5	126.7	36.5	137.6	64.8	131.9
	Max Fz	STR 3/ 60	684.1	21.7	34.9	-53.5	172.4	36.5	180.5	64.8	176.2
	Max Mx	STR 3/ 5	655.1	7.3	20.4	-16.4	83.5	13.7	85.1	21.4	84.6
	Max My	STR 3/ 60	684.1	21.7	34.9	-53.5	172.4	36.5	180.5	64.8	176.2
Load No.	Max Mz	STR 3/ 10	635.8	21.7	25.2	-53.5	126.7	36.5	137.6	64.8	131.9
6	Max Mxy	STR 3/ 60	684.1	21.7	34.9	-53.5	172.4	36.5	180.5	64.8	176.2
	Max Mxz	STR 3/ 10	635.8	21.7	25.2	-53.5	126.7	36.5	137.6	64.8	131.9
Member	Max Myz	STR 3/ 60	684.1	21.7	34.9	-53.5	172.4	36.5	180.5	64.8	176.2
708	Min Fx	STR 3/ 190	391.9	21.7	15.0	-53.5	89.7	36.5	104.4	64.8	96.9
	Min Fy	STR 3/ 5	655.1	7.3	20.4	-16.4	83.5	13.7	85.1	21.4	84.6
Joint	Min Fz	STR 3/ 189	460.9	7.3	8.8	-16.4	30.2	13.7	34.4	21.4	33.2
706	Min Mx	STR 3/ 10	635.8	21.7	25.2	-53.5	126.7	36.5	137.6	64.8	131.9
	Min My	STR 3/ 189	460.9	7.3	8.8	-16.4	30.2	13.7	34.4	21.4	33.2
	Min Mz	STR 3/ 5	655.1	7.3	20.4	-16.4	83.5	13.7	85.1	21.4	84.6
	Min Mxy	STR 3/ 189	460.9	7.3	8.8	-16.4	30.2	13.7	34.4	21.4	33.2
	Min Mxz	STR 3/ 5	655.1	7.3	20.4	-16.4	83.5	13.7	85.1	21.4	84.6
	Min Myz	STR 3/ 189	460.9	7.3	8.8	-16.4	30.2	13.7	34.4	21.4	33.2

AASHTO Limit State: STR 3 - STRENGTH III

	Max/ Min ID	Combo ID	Fx (kips)	Fy (kips)	Fz (kips)	Mx (ft*kip)	My (ft*kip)	Mz (ft*kip)	Mxy (ft*kip)	Mxz (ft*kip)	Myz (ft*kip)
	Max Fx	STR 3/ 59	866.0	-1.5	3.6	16.8	78.4	-20.9	80.2	26.8	81.1
	Max Fy	STR 3/ 5	619.7	-1.5	5.2	16.8	59.8	-20.9	62.1	26.8	63.3
	Max Fz	STR 3/ 65	605.5	-1.5	5.3	16.8	58.0	-20.9	60.4	26.8	61.6
	Max Mx	STR 3/ 10	651.8	-4.9	5.1	44.2	55.4	-58.7	70.9	73.5	80.7
	Max My	STR 3/ 59	866.0	-1.5	3.6	16.8	78.4	-20.9	80.2	26.8	81.1
Load No.	Max Mz	STR 3/ 5	619.7	-1.5	5.2	16.8	59.8	-20.9	62.1	26.8	63.3
7	Max Mxy	STR 3/ 51	812.5	-4.3	4.1	38.4	76.4	-52.0	85.5	64.6	92.4
	Max Mxz	STR 3/ 130	395.5	-4.9	3.8	44.2	42.2	-58.7	61.2	73.5	72.3
Member	Max Myz	STR 3/ 51	812.5	-4.3	4.1	38.4	76.4	-52.0	85.5	64.6	92.4
711	Min Fx	STR 3/ 185	349.3	-1.5	4.0	16.8	44.8	-20.9	47.8	26.8	49.4
	Min Fy	STR 3/ 10	651.8	-4.9	5.1	44.2	55.4	-58.7	70.9	73.5	80.7
Joint	Min Fz	STR 3/ 179	609.8	-1.5	2.3	16.8	65.2	-20.9	67.3	26.8	68.5
707	Min Mx	STR 3/ 5	619.7	-1.5	5.2	16.8	59.8	-20.9	62.1	26.8	63.3
	Min My	STR 3/ 190	381.3	-4.9	3.9	44.2	40.4	-58.7	59.9	73.5	71.3
	Min Mz	STR 3/ 130	395.5	-4.9	3.8	44.2	42.2	-58.7	61.2	73.5	72.3
	Min Mxy	STR 3/ 185	349.3	-1.5	4.0	16.8	44.8	-20.9	47.8	26.8	49.4
	Min Mxz	STR 3/ 5	619.7	-1.5	5.2	16.8	59.8	-20.9	62.1	26.8	63.3
	Min Myz	STR 3/ 185	349.3	-1.5	4.0	16.8	44.8	-20.9	47.8	26.8	49.4
	Max Fx	STR 3/ 185	-346.3	0.1	8.6	-16.8	17.3	-1.1	24.1	16.8	17.3
	Max Fy	STR 3/ 10	-643.9	0.4	10.5	-44.2	16.6	-13.2	47.2	46.2	21.2
	Max Fz	STR 3/ 55	-753.8	0.1	12.3	-16.8	26.2	-1.1	31.1	16.8	26.2
	Max Mx	STR 3/ 5	-614.5	0.1	11.8	-16.8	27.8	-1.1	32.4	16.8	27.8
	Max My	STR 3/ 65	-600.3	0.1	11.7	-16.8	28.0	-1.1	32.7	16.8	28.0
Load No.	Max Mz	STR 3/ 5	-614.5	0.1	11.8	-16.8	27.8	-1.1	32.4	16.8	27.8
8	Max Mxy	STR 3/ 70	-629.7	0.4	10.4	-44.2	16.8	-13.2	47.3	46.2	21.4
	Max Mxz	STR 3/ 10	-643.9	0.4	10.5	-44.2	16.6	-13.2	47.2	46.2	21.2
Member	Max Myz	STR 3/ 65	-600.3	0.1	11.7	-16.8	28.0	-1.1	32.7	16.8	28.0
711	Min Fx	STR 3/ 59	-855.5	0.1	10.7	-16.8	13.8	-1.1	21.8	16.8	13.9
	Min Fy	STR 3/ 1	-665.3	-0.1	11.0	-38.4	21.6	-5.6	44.0	38.8	22.3
Joint	Min Fz	STR 3/ 189	-447.9	0.1	6.9	-16.8	5.0	-1.1	17.5	16.8	5.1
708	Min Mx	STR 3/ 10	-643.9	0.4	10.5	-44.2	16.6	-13.2	47.2	46.2	21.2
	Min My	STR 3/ 159	-496.8	0.1	7.3	-16.8	3.1	-1.1	17.1	16.8	3.3
	Min Mz	STR 3/ 10	-643.9	0.4	10.5	-44.2	16.6	-13.2	47.2	46.2	21.2
	Min Mxy	STR 3/ 159	-496.8	0.1	7.3	-16.8	3.1	-1.1	17.1	16.8	3.3
	Min Mxz	STR 3/ 5	-614.5	0.1	11.8	-16.8	27.8	-1.1	32.4	16.8	27.8
	Min Myz	STR 3/ 159	-496.8	0.1	7.3	-16.8	3.1	-1.1	17.1	16.8	3.3

AASHTO Limit State: STR 3 - STRENGTH III

	Max/ Min ID	Combo ID	Fx (kips)	Fy (kips)	Fz (kips)	Mx (ft*kip)	My (ft*kip)	Mz (ft*kip)	Mxy (ft*kip)	Mxz (ft*kip)	Myz (ft*kip)
	Max Fx	STR 3/ 215	-60.5	-3.1	13.5	3.8	-94.3	-57.7	94.4	57.8	110.5
	Max Fy	STR 3/ 10	-187.2	-2.5	6.5	16.1	-52.3	-98.3	54.7	99.6	111.3
	Max Fz	STR 3/ 155	-72.1	-3.1	13.5	3.8	-94.7	-57.7	94.8	57.8	110.9
	Max Mx	STR 3/ 10	-187.2	-2.5	6.5	16.1	-52.3	-98.3	54.7	99.6	111.3
	Max My	STR 3/ 89	-215.4	-3.1	2.1	3.8	-31.6	-57.5	31.8	57.7	65.6
Load No.	Max Mz	STR 3/ 9	-221.2	-3.1	4.1	3.8	-42.9	-57.5	43.1	57.7	71.8
9	Max Mxy	STR 3/ 155	-72.1	-3.1	13.5	3.8	-94.7	-57.7	94.8	57.8	110.9
	Max Mxz	STR 3/ 1	-200.4	-8.7	5.6	10.1	-51.7	-137.2	52.7	137.6	146.6
Member	Max Myz	STR 3/ 151	-92.9	-8.7	12.0	10.1	-85.9	-137.2	86.5	137.6	161.9
714	Min Fx	STR 3/ 19	-229.1	-3.1	2.6	3.8	-34.6	-57.5	34.8	57.7	67.1
	Min Fy	STR 3/ 1	-200.4	-8.7	5.6	10.1	-51.7	-137.2	52.7	137.6	146.6
Joint	Min Fz	STR 3/ 29	-227.0	-3.1	2.1	3.8	-32.0	-57.5	32.2	57.7	65.8
709	Min Mx	STR 3/ 5	-179.5	-3.1	7.2	3.8	-60.5	-57.7	60.7	57.8	83.6
	Min My	STR 3/ 155	-72.1	-3.1	13.5	3.8	-94.7	-57.7	94.8	57.8	110.9
	Min Mz	STR 3/ 1	-200.4	-8.7	5.6	10.1	-51.7	-137.2	52.7	137.6	146.6
	Min Mxy	STR 3/ 89	-215.4	-3.1	2.1	3.8	-31.6	-57.5	31.8	57.7	65.6
	Min Mxz	STR 3/ 9	-221.2	-3.1	4.1	3.8	-42.9	-57.5	43.1	57.7	71.8
	Min Myz	STR 3/ 89	-215.4	-3.1	2.1	3.8	-31.6	-57.5	31.8	57.7	65.6
	Max Fx	STR 3/ 19	236.9	2.5	-3.9	-3.8	-4.7	24.8	6.1	25.1	25.2
	Max Fy	STR 3/ 1	208.1	6.7	-5.5	-10.1	-15.0	46.5	18.1	47.6	48.8
	Max Fz	STR 3/ 27	225.6	5.3	-3.4	-8.3	-1.7	40.5	8.4	41.3	40.5
	Max Mx	STR 3/ 5	187.2	2.5	-5.6	-3.8	-16.0	24.8	16.4	25.1	29.5
	Max My	STR 3/ 29	234.7	2.5	-3.4	-3.8	-1.2	24.8	4.0	25.1	24.8
Load No.	Max Mz	STR 3/ 10	194.9	0.6	-6.3	-16.1	-23.8	79.9	28.8	81.5	83.4
10	Max Mxy	STR 3/ 160	85.4	0.6	-12.7	-16.1	-64.7	79.9	66.6	81.5	102.8
	Max Mxz	STR 3/ 10	194.9	0.6	-6.3	-16.1	-23.8	79.9	28.8	81.5	83.4
Member	Max Myz	STR 3/ 160	85.4	0.6	-12.7	-16.1	-64.7	79.9	66.6	81.5	102.8
714	Min Fx	STR 3/ 215	66.1	2.5	-12.0	-3.8	-56.8	24.8	56.9	25.1	62.0
	Min Fy	STR 3/ 10	194.9	0.6	-6.3	-16.1	-23.8	79.9	28.8	81.5	83.4
Joint	Min Fz	STR 3/ 160	85.4	0.6	-12.7	-16.1	-64.7	79.9	66.6	81.5	102.8
710	Min Mx	STR 3/ 10	194.9	0.6	-6.3	-16.1	-23.8	79.9	28.8	81.5	83.4
	Min My	STR 3/ 160	85.4	0.6	-12.7	-16.1	-64.7	79.9	66.6	81.5	102.8
	Min Mz	STR 3/ 5	187.2	2.5	-5.6	-3.8	-16.0	24.8	16.4	25.1	29.5
	Min Mxy	STR 3/ 29	234.7	2.5	-3.4	-3.8	-1.2	24.8	4.0	25.1	24.8
	Min Mxz	STR 3/ 5	187.2	2.5	-5.6	-3.8	-16.0	24.8	16.4	25.1	29.5
	Min Myz	STR 3/ 29	234.7	2.5	-3.4	-3.8	-1.2	24.8	4.0	25.1	24.8

AASHTO Limit State: STR 3 - STRENGTH III

	Max/ Min ID	Combo ID	Fx (kips)	Fy (kips)	Fz (kips)	Mx (ft*kip)	My (ft*kip)	Mz (ft*kip)	Mxy (ft*kip)	Mxz (ft*kip)	Myz (ft*kip)
	Max Fx	STR 3/ 79	-175.1	-1.1	2.9	10.8	57.6	-13.2	58.6	17.0	59.1
	Max Fy	STR 3/ 5	-294.4	-1.1	4.0	10.8	52.7	-13.2	53.8	17.0	54.3
	Max Fz	STR 3/ 65	-277.5	-1.1	4.1	10.8	51.2	-13.2	52.3	17.0	52.9
	Max Mx	STR 3/ 1	-251.8	-3.4	3.5	22.7	54.8	-30.5	59.3	38.0	62.7
	Max My	STR 3/ 59	-245.4	-1.1	2.8	10.8	60.4	-13.2	61.3	17.0	61.8
Load No.	Max Mz	STR 3/ 5	-294.4	-1.1	4.0	10.8	52.7	-13.2	53.8	17.0	54.3
11	Max Mxy	STR 3/ 56	-276.1	-3.2	3.2	21.4	58.8	-28.4	62.6	35.6	65.3
	Max Mxz	STR 3/ 1	-251.8	-3.4	3.5	22.7	54.8	-30.5	59.3	38.0	62.7
Member	Max Myz	STR 3/ 51	-288.0	-3.4	3.4	22.7	58.3	-30.5	62.5	38.0	65.8
717	Min Fx	STR 3/ 155	-354.1	-1.1	2.8	10.8	42.2	-13.2	43.5	17.0	44.2
	Min Fy	STR 3/ 1	-251.8	-3.4	3.5	22.7	54.8	-30.5	59.3	38.0	62.7
Joint	Min Fz	STR 3/ 139	-201.7	-1.1	1.6	10.8	48.2	-13.2	49.4	17.0	49.9
711	Min Mx	STR 3/ 5	-294.4	-1.1	4.0	10.8	52.7	-13.2	53.8	17.0	54.3
	Min My	STR 3/ 185	-287.3	-1.1	2.9	10.8	40.2	-13.2	41.7	17.0	42.3
	Min Mz	STR 3/ 1	-251.8	-3.4	3.5	22.7	54.8	-30.5	59.3	38.0	62.7
	Min Mxy	STR 3/ 185	-287.3	-1.1	2.9	10.8	40.2	-13.2	41.7	17.0	42.3
	Min Mxz	STR 3/ 5	-294.4	-1.1	4.0	10.8	52.7	-13.2	53.8	17.0	54.3
	Min Myz	STR 3/ 185	-287.3	-1.1	2.9	10.8	40.2	-13.2	41.7	17.0	42.3
	Max Fx	STR 3/ 155	357.4	-0.1	8.3	-10.8	23.6	-0.1	25.9	10.8	23.6
	Max Fy	STR 3/ 5	299.9	-0.1	10.9	-10.8	28.9	-0.1	30.8	10.8	28.9
	Max Fz	STR 3/ 15	282.6	-0.1	11.0	-10.8	28.0	-0.1	30.0	10.8	28.0
	Max Mx	STR 3/ 5	299.9	-0.1	10.9	-10.8	28.9	-0.1	30.8	10.8	28.9
	Max My	STR 3/ 65	283.0	-0.1	10.8	-10.8	29.1	-0.1	31.1	10.8	29.1
Load No.	Max Mz	STR 3/ 9	219.5	-0.1	9.2	-10.8	17.4	0.0	20.5	10.8	17.4
12	Max Mxy	STR 3/ 62	254.2	-0.6	10.1	-21.4	24.9	-1.8	32.9	21.5	25.0
	Max Mxz	STR 3/ 1	259.7	-0.6	10.0	-22.7	23.2	-3.1	32.4	22.9	23.4
Member	Max Myz	STR 3/ 65	283.0	-0.1	10.8	-10.8	29.1	-0.1	31.1	10.8	29.1
717	Min Fx	STR 3/ 79	185.4	-0.1	9.2	-10.8	16.8	0.0	19.9	10.8	16.8
	Min Fy	STR 3/ 10	227.6	-1.1	10.0	-17.6	25.0	-4.3	30.6	18.2	25.3
Joint	Min Fz	STR 3/ 189	210.2	-0.1	6.5	-10.8	12.8	0.0	16.8	10.8	12.8
712	Min Mx	STR 3/ 1	259.7	-0.6	10.0	-22.7	23.2	-3.1	32.4	22.9	23.4
	Min My	STR 3/ 179	263.2	-0.1	6.7	-10.8	10.9	0.0	15.4	10.8	10.9
	Min Mz	STR 3/ 10	227.6	-1.1	10.0	-17.6	25.0	-4.3	30.6	18.2	25.3
	Min Mxy	STR 3/ 179	263.2	-0.1	6.7	-10.8	10.9	0.0	15.4	10.8	10.9
	Min Mxz	STR 3/ 9	219.5	-0.1	9.2	-10.8	17.4	0.0	20.5	10.8	17.4
	Min Myz	STR 3/ 179	263.2	-0.1	6.7	-10.8	10.9	0.0	15.4	10.8	10.9

AASHTO Limit State: STR 3 - STRENGTH III

	Max/ Min ID	Combo ID	Fx (kips)	Fy (kips)	Fz (kips)	Mx (ft*kip)	My (ft*kip)	Mz (ft*kip)	Mxy (ft*kip)	Mxz (ft*kip)	Myz (ft*kip)
	Max Fx	STR 3/ 55	309.0	1.3	-26.7	-4.3	200.5	33.9	200.6	34.2	203.4
	Max Fy	STR 3/ 1	228.5	3.6	-25.0	-7.3	189.2	75.9	189.3	76.2	203.8
	Max Fz	STR 3/ 190	181.0	-5.0	-20.4	3.2	152.5	6.9	152.5	7.6	152.6
	Max Mx	STR 3/ 10	212.8	-5.0	-23.4	3.2	178.5	6.9	178.6	7.6	178.7
	Max My	STR 3/ 55	309.0	1.3	-26.7	-4.3	200.5	33.9	200.6	34.2	203.4
Load No.	Max Mz	STR 3/ 1	228.5	3.6	-25.0	-7.3	189.2	75.9	189.3	76.2	203.8
13	Max Mxy	STR 3/ 55	309.0	1.3	-26.7	-4.3	200.5	33.9	200.6	34.2	203.4
	Max Mxz	STR 3/ 1	228.5	3.6	-25.0	-7.3	189.2	75.9	189.3	76.2	203.8
Member	Max Myz	STR 3/ 51	291.3	3.6	-26.0	-7.3	198.3	75.9	198.4	76.2	212.3
720	Min Fx	STR 3/ 189	178.9	1.3	-21.2	-4.3	160.9	33.9	160.9	34.2	164.4
	Min Fy	STR 3/ 10	212.8	-5.0	-23.4	3.2	178.5	6.9	178.6	7.6	178.7
Joint	Min Fz	STR 3/ 55	309.0	1.3	-26.7	-4.3	200.5	33.9	200.6	34.2	203.4
713	Min Mx	STR 3/ 1	228.5	3.6	-25.0	-7.3	189.2	75.9	189.3	76.2	203.8
	Min My	STR 3/ 190	181.0	-5.0	-20.4	3.2	152.5	6.9	152.5	7.6	152.6
	Min Mz	STR 3/ 10	212.8	-5.0	-23.4	3.2	178.5	6.9	178.6	7.6	178.7
	Min Mxy	STR 3/ 190	181.0	-5.0	-20.4	3.2	152.5	6.9	152.5	7.6	152.6
	Min Mxz	STR 3/ 10	212.8	-5.0	-23.4	3.2	178.5	6.9	178.6	7.6	178.7
	Min Myz	STR 3/ 190	181.0	-5.0	-20.4	3.2	152.5	6.9	152.5	7.6	152.6
	Max Fx	STR 3/ 189	-173.6	-0.6	24.9	4.3	146.1	-21.0	146.2	21.4	147.6
	Max Fy	STR 3/ 10	-204.6	7.3	26.6	-3.2	152.5	-88.5	152.5	88.5	176.3
	Max Fz	STR 3/ 59	-265.9	-0.6	29.9	4.3	172.2	-21.0	172.2	21.4	173.5
	Max Mx	STR 3/ 1	-220.3	-1.4	28.1	7.3	163.3	-42.1	163.4	42.8	168.6
	Max My	STR 3/ 59	-265.9	-0.6	29.9	4.3	172.2	-21.0	172.2	21.4	173.5
Load No.	Max Mz	STR 3/ 5	-237.5	-0.6	27.4	4.3	160.5	-21.0	160.5	21.4	161.8
14	Max Mxy	STR 3/ 59	-265.9	-0.6	29.9	4.3	172.2	-21.0	172.2	21.4	173.5
	Max Mxz	STR 3/ 10	-204.6	7.3	26.6	-3.2	152.5	-88.5	152.5	88.5	176.3
Member	Max Myz	STR 3/ 60	-267.4	7.3	27.6	-3.2	158.6	-88.5	158.6	88.5	181.6
720	Min Fx	STR 3/ 55	-300.3	-0.6	28.5	4.3	166.6	-21.0	166.6	21.4	167.9
	Min Fy	STR 3/ 1	-220.3	-1.4	28.1	7.3	163.3	-42.1	163.4	42.8	168.6
Joint	Min Fz	STR 3/ 190	-175.1	7.3	22.6	-3.2	132.6	-88.5	132.6	88.5	159.4
714	Min Mx	STR 3/ 10	-204.6	7.3	26.6	-3.2	152.5	-88.5	152.5	88.5	176.3
	Min My	STR 3/ 200	-190.0	7.3	22.6	-3.2	132.5	-88.5	132.5	88.5	159.3
	Min Mz	STR 3/ 10	-204.6	7.3	26.6	-3.2	152.5	-88.5	152.5	88.5	176.3
	Min Mxy	STR 3/ 200	-190.0	7.3	22.6	-3.2	132.5	-88.5	132.5	88.5	159.3
	Min Mxz	STR 3/ 5	-237.5	-0.6	27.4	4.3	160.5	-21.0	160.5	21.4	161.8
	Min Myz	STR 3/ 195	-222.9	-0.6	23.5	4.3	140.4	-21.0	140.5	21.4	142.0

AASHTO Limit State: STR 3 - STRENGTH III

	Max/ Min ID	Combo ID	Fx (kips)	Fy (kips)	Fz (kips)	Mx (ft*kip)	My (ft*kip)	Mz (ft*kip)	Mxy (ft*kip)	Mxz (ft*kip)	Myz (ft*kip)
	Max Fx	STR 3/ 190	-654.5	-0.1	-0.5	7.8	41.9	20.2	42.6	21.6	46.5
	Max Fy	STR 3/ 10	-899.3	-0.1	-0.2	7.8	53.5	20.2	54.0	21.6	57.1
	Max Fz	STR 3/ 94	-1011.8	-1.7	0.5	11.8	50.5	-13.3	51.8	17.8	52.2
	Max Mx	STR 3/ 1	-975.4	-2.7	-0.4	16.5	55.7	-19.0	58.1	25.2	58.9
	Max My	STR 3/ 19	-971.7	-1.0	-1.0	8.4	58.8	-9.2	59.4	12.5	59.5
Load No.	Max Mz	STR 3/ 10	-899.3	-0.1	-0.2	7.8	53.5	20.2	54.0	21.6	57.1
15	Max Mxy	STR 3/ 11	-1003.1	-2.7	-0.6	16.5	58.1	-19.0	60.4	25.2	61.1
	Max Mxz	STR 3/ 1	-975.4	-2.7	-0.4	16.5	55.7	-19.0	58.1	25.2	58.9
Member	Max Myz	STR 3/ 11	-1003.1	-2.7	-0.6	16.5	58.1	-19.0	60.4	25.2	61.1
723	Min Fx	STR 3/ 55	-1108.3	-1.0	0.2	8.4	53.9	-9.2	54.5	12.5	54.6
	Min Fy	STR 3/ 1	-975.4	-2.7	-0.4	16.5	55.7	-19.0	58.1	25.2	58.9
Joint	Min Fz	STR 3/ 138	-771.7	-1.7	-1.4	11.8	48.4	-13.3	49.8	17.8	50.2
715	Min Mx	STR 3/ 10	-899.3	-0.1	-0.2	7.8	53.5	20.2	54.0	21.6	57.1
	Min My	STR 3/ 220	-704.4	-0.1	-0.2	7.8	38.5	20.2	39.3	21.6	43.5
	Min Mz	STR 3/ 1	-975.4	-2.7	-0.4	16.5	55.7	-19.0	58.1	25.2	58.9
	Min Mxy	STR 3/ 220	-704.4	-0.1	-0.2	7.8	38.5	20.2	39.3	21.6	43.5
	Min Mxz	STR 3/ 5	-1006.7	-1.0	0.1	8.4	55.0	-9.2	55.6	12.5	55.8
	Min Myz	STR 3/ 215	-811.8	-1.0	0.0	8.4	40.0	-9.2	40.9	12.5	41.1
	Max Fx	STR 3/ 55	1114.5	-0.1	11.7	-8.4	62.8	1.4	63.4	8.5	62.8
	Max Fy	STR 3/ 5	1012.9	-0.1	11.8	-8.4	63.9	1.4	64.5	8.5	63.9
	Max Fz	STR 3/ 15	1040.6	-0.1	12.0	-8.4	65.1	1.4	65.6	8.5	65.1
	Max Mx	STR 3/ 10	907.3	-3.2	10.7	-7.8	57.6	11.9	58.1	14.3	58.8
	Max My	STR 3/ 25	1064.6	-0.1	12.0	-8.4	65.3	1.4	65.8	8.5	65.3
Load No.	Max Mz	STR 3/ 10	907.3	-3.2	10.7	-7.8	57.6	11.9	58.1	14.3	58.8
16	Max Mxy	STR 3/ 25	1064.6	-0.1	12.0	-8.4	65.3	1.4	65.8	8.5	65.3
	Max Mxz	STR 3/ 1	983.4	-0.7	10.9	-16.5	58.7	-0.1	61.0	16.5	58.7
Member	Max Myz	STR 3/ 25	1064.6	-0.1	12.0	-8.4	65.3	1.4	65.8	8.5	65.3
723	Min Fx	STR 3/ 190	660.3	-3.2	8.1	-7.8	45.8	11.9	46.5	14.3	47.3
	Min Fy	STR 3/ 10	907.3	-3.2	10.7	-7.8	57.6	11.9	58.1	14.3	58.8
Joint	Min Fz	STR 3/ 219	756.7	-0.1	7.0	-8.4	39.3	1.4	40.2	8.5	39.3
716	Min Mx	STR 3/ 1	983.4	-0.7	10.9	-16.5	58.7	-0.1	61.0	16.5	58.7
	Min My	STR 3/ 219	756.7	-0.1	7.0	-8.4	39.3	1.4	40.2	8.5	39.3
	Min Mz	STR 3/ 1	983.4	-0.7	10.9	-16.5	58.7	-0.1	61.0	16.5	58.7
	Min Mxy	STR 3/ 219	756.7	-0.1	7.0	-8.4	39.3	1.4	40.2	8.5	39.3
	Min Mxz	STR 3/ 5	1012.9	-0.1	11.8	-8.4	63.9	1.4	64.5	8.5	63.9
	Min Myz	STR 3/ 219	756.7	-0.1	7.0	-8.4	39.3	1.4	40.2	8.5	39.3

AASHTO Limit State: STR 3 - STRENGTH III

	Max/ Min ID	Combo ID	Fx (kips)	Fy (kips)	Fz (kips)	Mx (ft*kip)	My (ft*kip)	Mz (ft*kip)	Mxy (ft*kip)	Mxz (ft*kip)	Myz (ft*kip)
	Max Fx	STR 3/ 55	981.9	0.8	-16.6	-8.5	202.3	21.6	202.5	23.2	203.5
	Max Fy	STR 3/ 1	861.0	2.2	-14.4	-16.2	183.2	47.2	183.9	49.9	189.2
	Max Fz	STR 3/ 189	611.3	0.8	-10.5	-8.5	132.7	21.6	133.0	23.2	134.4
	Max Mx	STR 3/ 5	882.1	0.8	-15.5	-8.5	190.2	21.6	190.4	23.2	191.4
	Max My	STR 3/ 25	972.6	0.8	-16.6	-8.5	204.7	21.6	204.9	23.2	205.9
Load No.	Max Mz	STR 3/ 1	861.0	2.2	-14.4	-16.2	183.2	47.2	183.9	49.9	189.2
17	Max Mxy	STR 3/ 25	972.6	0.8	-16.6	-8.5	204.7	21.6	204.9	23.2	205.9
	Max Mxz	STR 3/ 1	861.0	2.2	-14.4	-16.2	183.2	47.2	183.9	49.9	189.2
Member	Max Myz	STR 3/ 24	969.0	1.5	-16.3	-11.8	203.6	32.2	203.9	34.3	206.1
726	Min Fx	STR 3/ 190	582.3	-2.7	-10.6	-8.5	129.9	7.4	130.2	11.3	130.1
	Min Fy	STR 3/ 10	811.0	-2.7	-13.4	-8.5	173.4	7.4	173.6	11.3	173.6
Joint	Min Fz	STR 3/ 25	972.6	0.8	-16.6	-8.5	204.7	21.6	204.9	23.2	205.9
717	Min Mx	STR 3/ 1	861.0	2.2	-14.4	-16.2	183.2	47.2	183.9	49.9	189.2
	Min My	STR 3/ 220	591.6	-2.7	-10.6	-8.5	127.5	7.4	127.8	11.3	127.7
	Min Mz	STR 3/ 10	811.0	-2.7	-13.4	-8.5	173.4	7.4	173.6	11.3	173.6
	Min Mxy	STR 3/ 220	591.6	-2.7	-10.6	-8.5	127.5	7.4	127.8	11.3	127.7
	Min Mxz	STR 3/ 10	811.0	-2.7	-13.4	-8.5	173.4	7.4	173.6	11.3	173.6
	Min Myz	STR 3/ 220	591.6	-2.7	-10.6	-8.5	127.5	7.4	127.8	11.3	127.7
	Max Fx	STR 3/ 190	-576.5	5.5	15.9	8.5	91.1	-74.6	91.5	75.1	117.8
	Max Fy	STR 3/ 10	-803.0	5.5	20.8	8.5	111.3	-74.6	111.7	75.1	134.0
	Max Fz	STR 3/ 28	-927.1	0.3	23.2	11.8	120.6	-22.3	121.2	25.2	122.7
	Max Mx	STR 3/ 1	-853.0	0.6	21.8	16.2	117.4	-32.6	118.5	36.4	121.8
	Max My	STR 3/ 59	-933.1	0.0	23.2	8.5	122.6	-15.0	122.9	17.2	123.5
Load No.	Max Mz	STR 3/ 5	-872.9	0.0	21.5	8.5	117.1	-15.0	117.4	17.2	118.0
18	Max Mxy	STR 3/ 56	-947.6	0.6	22.9	15.7	122.4	-30.8	123.4	34.6	126.3
	Max Mxz	STR 3/ 10	-803.0	5.5	20.8	8.5	111.3	-74.6	111.7	75.1	134.0
Member	Max Myz	STR 3/ 60	-902.8	5.5	21.9	8.5	116.3	-74.6	116.6	75.1	138.2
726	Min Fx	STR 3/ 55	-972.7	0.0	22.6	8.5	122.0	-15.0	122.3	17.2	122.9
	Min Fy	STR 3/ 5	-872.9	0.0	21.5	8.5	117.1	-15.0	117.4	17.2	118.0
Joint	Min Fz	STR 3/ 190	-576.5	5.5	15.9	8.5	91.1	-74.6	91.5	75.1	117.8
718	Min Mx	STR 3/ 5	-872.9	0.0	21.5	8.5	117.1	-15.0	117.4	17.2	118.0
	Min My	STR 3/ 190	-576.5	5.5	15.9	8.5	91.1	-74.6	91.5	75.1	117.8
	Min Mz	STR 3/ 10	-803.0	5.5	20.8	8.5	111.3	-74.6	111.7	75.1	134.0
	Min Mxy	STR 3/ 190	-576.5	5.5	15.9	8.5	91.1	-74.6	91.5	75.1	117.8
	Min Mxz	STR 3/ 5	-872.9	0.0	21.5	8.5	117.1	-15.0	117.4	17.2	118.0
	Min Myz	STR 3/ 185	-646.4	0.0	16.6	8.5	96.9	-15.0	97.3	17.2	98.0

AASHTO Limit State: STR 3 - STRENGTH III

	Max/ Min ID	Combo ID	Fx (kips)	Fy (kips)	Fz (kips)	Mx (ft*kip)	My (ft*kip)	Mz (ft*kip)	Mxy (ft*kip)	Mxz (ft*kip)	Myz (ft*kip)
	Max Fx	STR 3/ 190	-817.2	4.1	3.3	14.1	-29.4	40.3	32.6	42.7	49.9
	Max Fy	STR 3/ 10	-1168.8	4.1	7.9	14.1	-67.1	40.3	68.5	42.7	78.3
	Max Fz	STR 3/ 25	-1340.3	-0.7	11.8	9.9	-103.7	-12.3	104.1	15.8	104.4
	Max Mx	STR 3/ 1	-1256.0	-1.7	8.6	19.7	-73.4	-22.5	76.0	30.0	76.8
	Max My	STR 3/ 219	-908.1	-0.7	2.5	9.9	-23.9	-12.3	25.9	15.8	26.9
Load No.	Max Mz	STR 3/ 10	-1168.8	4.1	7.9	14.1	-67.1	40.3	68.5	42.7	78.3
19	Max Mxy	STR 3/ 25	-1340.3	-0.7	11.8	9.9	-103.7	-12.3	104.1	15.8	104.4
	Max Mxz	STR 3/ 10	-1168.8	4.1	7.9	14.1	-67.1	40.3	68.5	42.7	78.3
Member	Max Myz	STR 3/ 25	-1340.3	-0.7	11.8	9.9	-103.7	-12.3	104.1	15.8	104.4
729	Min Fx	STR 3/ 55	-1353.5	-0.7	11.5	9.9	-101.8	-12.3	102.2	15.8	102.5
	Min Fy	STR 3/ 1	-1256.0	-1.7	8.6	19.7	-73.4	-22.5	76.0	30.0	76.8
Joint	Min Fz	STR 3/ 219	-908.1	-0.7	2.5	9.9	-23.9	-12.3	25.9	15.8	26.9
719	Min Mx	STR 3/ 5	-1265.5	-0.7	9.9	9.9	-83.3	-12.3	83.9	15.8	84.2
	Min My	STR 3/ 25	-1340.3	-0.7	11.8	9.9	-103.7	-12.3	104.1	15.8	104.4
	Min Mz	STR 3/ 1	-1256.0	-1.7	8.6	19.7	-73.4	-22.5	76.0	30.0	76.8
	Min Mxy	STR 3/ 219	-908.1	-0.7	2.5	9.9	-23.9	-12.3	25.9	15.8	26.9
	Min Mxz	STR 3/ 5	-1265.5	-0.7	9.9	9.9	-83.3	-12.3	83.9	15.8	84.2
	Min Myz	STR 3/ 219	-908.1	-0.7	2.5	9.9	-23.9	-12.3	25.9	15.8	26.9
	Max Fx	STR 3/ 55	1360.7	-0.1	-3.6	-9.9	-19.5	8.8	21.9	13.3	21.4
	Max Fy	STR 3/ 5	1272.7	-0.1	-2.0	-9.9	-11.9	8.8	15.5	13.3	14.8
	Max Fz	STR 3/ 220	836.4	-6.9	1.7	-14.1	15.7	46.1	21.2	48.2	48.7
	Max Mx	STR 3/ 5	1272.7	-0.1	-2.0	-9.9	-11.9	8.8	15.5	13.3	14.8
	Max My	STR 3/ 220	836.4	-6.9	1.7	-14.1	15.7	46.1	21.2	48.2	48.7
Load No.	Max Mz	STR 3/ 130	869.9	-6.9	1.2	-14.1	11.7	46.1	18.4	48.2	47.6
20	Max Mxy	STR 3/ 21	1339.1	-1.0	-4.1	-19.7	-22.6	15.8	30.0	25.3	27.6
	Max Mxz	STR 3/ 130	869.9	-6.9	1.2	-14.1	11.7	46.1	18.4	48.2	47.6
Member	Max Myz	STR 3/ 30	1251.9	-6.9	-3.4	-14.1	-18.8	46.1	23.5	48.2	49.8
729	Min Fx	STR 3/ 190	823.2	-6.9	1.4	-14.1	12.8	46.1	19.1	48.2	47.9
	Min Fy	STR 3/ 10	1177.1	-6.9	-1.4	-14.1	-8.2	46.1	16.4	48.2	46.8
Joint	Min Fz	STR 3/ 29	1330.7	-0.1	-4.2	-9.9	-22.7	8.8	24.8	13.3	24.4
720	Min Mx	STR 3/ 1	1264.3	-1.0	-2.1	-19.7	-12.0	15.8	23.1	25.3	19.9
	Min My	STR 3/ 26	1337.0	-0.8	-4.1	-18.9	-22.7	15.8	29.5	24.7	27.7
	Min Mz	STR 3/ 5	1272.7	-0.1	-2.0	-9.9	-11.9	8.8	15.5	13.3	14.8
	Min Mxy	STR 3/ 179	1036.8	-0.1	-1.3	-9.9	0.2	8.9	9.9	13.3	8.9
	Min Mxz	STR 3/ 5	1272.7	-0.1	-2.0	-9.9	-11.9	8.8	15.5	13.3	14.8
	Min Myz	STR 3/ 179	1036.8	-0.1	-1.3	-9.9	0.2	8.9	9.9	13.3	8.9

AASHTO Limit State: STR 3 - STRENGTH III

	Max/ Min ID	Combo ID	Fx (kips)	Fy (kips)	Fz (kips)	Mx (ft*kip)	My (ft*kip)	Mz (ft*kip)	Mxy (ft*kip)	Mxz (ft*kip)	Myz (ft*kip)
	Max Fx	STR 3/ 25	2016.3	1.0	11.8	-11.9	-72.1	18.5	73.1	22.0	74.4
	Max Fy	STR 3/ 1	1725.3	2.8	9.3	-24.9	-33.9	42.7	42.1	49.4	54.5
	Max Fz	STR 3/ 25	2016.3	1.0	11.8	-11.9	-72.1	18.5	73.1	22.0	74.4
	Max Mx	STR 3/ 5	1750.3	1.0	10.1	-11.9	-54.6	18.5	55.9	22.0	57.6
	Max My	STR 3/ 159	1123.3	1.0	4.5	-11.9	13.4	18.5	17.9	22.0	22.8
Load No.	Max Mz	STR 3/ 10	1633.6	2.2	9.1	-29.7	-32.5	45.5	44.0	54.3	55.9
21	Max Mxy	STR 3/ 25	2016.3	1.0	11.8	-11.9	-72.1	18.5	73.1	22.0	74.4
	Max Mxz	STR 3/ 10	1633.6	2.2	9.1	-29.7	-32.5	45.5	44.0	54.3	55.9
Member	Max Myz	STR 3/ 25	2016.3	1.0	11.8	-11.9	-72.1	18.5	73.1	22.0	74.4
732	Min Fx	STR 3/ 220	1015.2	2.2	5.2	-29.7	-5.9	45.5	30.3	54.3	45.9
	Min Fy	STR 3/ 5	1750.3	1.0	10.1	-11.9	-54.6	18.5	55.9	22.0	57.6
Joint	Min Fz	STR 3/ 159	1123.3	1.0	4.5	-11.9	13.4	18.5	17.9	22.0	22.8
721	Min Mx	STR 3/ 10	1633.6	2.2	9.1	-29.7	-32.5	45.5	44.0	54.3	55.9
	Min My	STR 3/ 25	2016.3	1.0	11.8	-11.9	-72.1	18.5	73.1	22.0	74.4
	Min Mz	STR 3/ 5	1750.3	1.0	10.1	-11.9	-54.6	18.5	55.9	22.0	57.6
	Min Mxy	STR 3/ 169	1343.6	1.0	5.9	-11.9	-1.3	18.5	12.0	22.0	18.5
	Min Mxz	STR 3/ 5	1750.3	1.0	10.1	-11.9	-54.6	18.5	55.9	22.0	57.6
	Min Myz	STR 3/ 169	1343.6	1.0	5.9	-11.9	-1.3	18.5	12.0	22.0	18.5
	Max Fx	STR 3/ 220	-1009.6	1.5	3.9	29.7	-8.7	-37.8	30.9	48.1	38.8
	Max Fy	STR 3/ 10	-1625.8	1.5	3.5	29.7	-32.5	-37.8	44.0	48.1	49.8
	Max Fz	STR 3/ 159	-1119.9	0.3	5.8	11.9	0.9	-9.9	11.9	15.5	10.0
	Max Mx	STR 3/ 10	-1625.8	1.5	3.5	29.7	-32.5	-37.8	44.0	48.1	49.8
	Max My	STR 3/ 219	-1078.5	0.3	5.8	11.9	1.8	-9.9	12.0	15.5	10.1
Load No.	Max Mz	STR 3/ 5	-1740.3	0.3	1.3	11.9	-47.8	-9.9	49.2	15.5	48.8
22	Max Mxy	STR 3/ 25	-2006.3	0.3	-0.4	11.9	-67.6	-9.9	68.6	15.5	68.3
	Max Mxz	STR 3/ 10	-1625.8	1.5	3.5	29.7	-32.5	-37.8	44.0	48.1	49.8
Member	Max Myz	STR 3/ 25	-2006.3	0.3	-0.4	11.9	-67.6	-9.9	68.6	15.5	68.3
732	Min Fx	STR 3/ 25	-2006.3	0.3	-0.4	11.9	-67.6	-9.9	68.6	15.5	68.3
	Min Fy	STR 3/ 5	-1740.3	0.3	1.3	11.9	-47.8	-9.9	49.2	15.5	48.8
Joint	Min Fz	STR 3/ 25	-2006.3	0.3	-0.4	11.9	-67.6	-9.9	68.6	15.5	68.3
722	Min Mx	STR 3/ 5	-1740.3	0.3	1.3	11.9	-47.8	-9.9	49.2	15.5	48.8
	Min My	STR 3/ 25	-2006.3	0.3	-0.4	11.9	-67.6	-9.9	68.6	15.5	68.3
	Min Mz	STR 3/ 10	-1625.8	1.5	3.5	29.7	-32.5	-37.8	44.0	48.1	49.8
	Min Mxy	STR 3/ 159	-1119.9	0.3	5.8	11.9	0.9	-9.9	11.9	15.5	10.0
	Min Mxz	STR 3/ 5	-1740.3	0.3	1.3	11.9	-47.8	-9.9	49.2	15.5	48.8
	Min Myz	STR 3/ 159	-1119.9	0.3	5.8	11.9	0.9	-9.9	11.9	15.5	10.0

Limit State: STRENGTH III

FR Friction
LF: 1
FR1: CR+SH+PT_EOC
FR2: CR+SH+PT_D10K

DC DL Structural Components & Attachments
LF1: 1.25
LF2: 0.9
DC1: DC

TU Uniform Temperature
LF: 0.5
TU1: TU-
TU2: TU+
TU3: TU+Temp. Diff.

WS Wind Load on Structure
LF: 1.4
WS1: WS_0 DEG
WS2: WS_15 DEG
WS3: WS_30 DEG
WS4: WS_45 DEG
WS5: WS_60 DEG
WS6: WS_-15 DEG
WS7: WS_-30 DEG
WS8: WS_-45 DEG
WS9: WS_-60 DEG
WS10: WS+WUP

DW DL Wearing Surfaces & Utilities
LF1: 1.5
LF2: 0.65
DW1: DW

Combo ID	Load Combinations
STR 3/ 1	1.00*(DC1*1.25 + DW1*1.50 + FR1*1.00 + TU1*0.50 + WS1*1.40)
STR 3/ 2	1.00*(DC1*1.25 + DW1*1.50 + FR1*1.00 + TU1*0.50 + WS2*1.40)
STR 3/ 3	1.00*(DC1*1.25 + DW1*1.50 + FR1*1.00 + TU1*0.50 + WS3*1.40)
STR 3/ 4	1.00*(DC1*1.25 + DW1*1.50 + FR1*1.00 + TU1*0.50 + WS4*1.40)
STR 3/ 5	1.00*(DC1*1.25 + DW1*1.50 + FR1*1.00 + TU1*0.50 + WS5*1.40)
STR 3/ 6	1.00*(DC1*1.25 + DW1*1.50 + FR1*1.00 + TU1*0.50 + WS6*1.40)
STR 3/ 7	1.00*(DC1*1.25 + DW1*1.50 + FR1*1.00 + TU1*0.50 + WS7*1.40)
STR 3/ 8	1.00*(DC1*1.25 + DW1*1.50 + FR1*1.00 + TU1*0.50 + WS8*1.40)
STR 3/ 9	1.00*(DC1*1.25 + DW1*1.50 + FR1*1.00 + TU1*0.50 + WS9*1.40)
STR 3/ 10	1.00*(DC1*1.25 + DW1*1.50 + FR1*1.00 + TU1*0.50 + WS10*1.40)
STR 3/ 11	1.00*(DC1*1.25 + DW1*1.50 + FR1*1.00 + TU2*0.50 + WS1*1.40)
STR 3/ 12	1.00*(DC1*1.25 + DW1*1.50 + FR1*1.00 + TU2*0.50 + WS2*1.40)
STR 3/ 13	1.00*(DC1*1.25 + DW1*1.50 + FR1*1.00 + TU2*0.50 + WS3*1.40)
STR 3/ 14	1.00*(DC1*1.25 + DW1*1.50 + FR1*1.00 + TU2*0.50 + WS4*1.40)
STR 3/ 15	1.00*(DC1*1.25 + DW1*1.50 + FR1*1.00 + TU2*0.50 + WS5*1.40)
STR 3/ 16	1.00*(DC1*1.25 + DW1*1.50 + FR1*1.00 + TU2*0.50 + WS6*1.40)
STR 3/ 17	1.00*(DC1*1.25 + DW1*1.50 + FR1*1.00 + TU2*0.50 + WS7*1.40)
STR 3/ 18	1.00*(DC1*1.25 + DW1*1.50 + FR1*1.00 + TU2*0.50 + WS8*1.40)
STR 3/ 19	1.00*(DC1*1.25 + DW1*1.50 + FR1*1.00 + TU2*0.50 + WS9*1.40)

Limit State: STRENGTH III

FR Friction
LF: 1
FR1: CR+SH+PT_EOC
FR2: CR+SH+PT_D10K

DC DL Structural Components & Attachments
LF1: 1.25
LF2: 0.9
DC1: DC

TU Uniform Temperature
LF: 0.5
TU1: TU-
TU2: TU+
TU3: TU+Temp. Diff.

WS Wind Load on Structure
LF: 1.4
WS1: WS_0 DEG
WS2: WS_15 DEG
WS3: WS_30 DEG
WS4: WS_45 DEG
WS5: WS_60 DEG
WS6: WS_-15 DEG
WS7: WS_-30 DEG
WS8: WS_-45 DEG
WS9: WS_-60 DEG
WS10: WS+WUP

DW DL Wearing Surfaces & Utilities
LF1: 1.5
LF2: 0.65
DW1: DW

Load (Row) Number	User's Load ID	Member ID	Joint ID	Fx (kips)	Fy (kips)	Fz (kips)	Mx (ft*kip)	My (ft*kip)	Mz (ft*kip)
1	CR+SH+PT_D10K	702	701	25.1	0	-97.7	0	635.3	0.1
2	CR+SH+PT_D10K	702	702	-25.1	0	97.7	0	644.5	0
3	CR+SH+PT_D10K	705	703	-71.3	0	3.1	0	-105.8	0
4	CR+SH+PT_D10K	705	704	71.3	0	-3.1	0	15	0
5	CR+SH+PT_D10K	708	705	120.2	0	8.8	0	-75.4	0
6	CR+SH+PT_D10K	708	706	-120.2	0	-8.8	0	-21	0
7	CR+SH+PT_D10K	711	707	-194.6	0	-0.2	0	21.9	0
8	CR+SH+PT_D10K	711	708	194.6	0	0.2	0	-17.8	0
9	CR+SH+PT_D10K	714	709	142.4	0	25.7	0	-156.5	0
10	CR+SH+PT_D10K	714	710	-142.4	0	-25.7	0	-147.4	0
11	CR+SH+PT_D10K	717	711	-298.2	0	-0.8	0	14.5	0
12	CR+SH+PT_D10K	717	712	298.2	0	0.8	0	5.4	0
13	CR+SH+PT_D10K	720	713	158.5	0	-16.3	0	112	0
14	CR+SH+PT_D10K	720	714	-158.5	0	16.3	0	105.8	0
15	CR+SH+PT_D10K	723	715	-235.9	0	-1.5	0	14.5	0
16	CR+SH+PT_D10K	723	716	235.9	0	1.5	0	16	0
17	CR+SH+PT_D10K	726	717	117.5	0	-5.7	0	40	0
18	CR+SH+PT_D10K	726	718	-117.5	0	5.7	0	54.4	0
19	CR+SH+PT_D10K	729	719	-121.8	0	-7.1	0	51.7	0
20	CR+SH+PT_D10K	729	720	121.8	0	7.1	0	61.2	0
21	CR+SH+PT_D10K	732	721	-58.6	0	-3.2	0	45.2	0
22	CR+SH+PT_D10K	732	722	58.6	0	3.2	0	27.6	0

Load (Row) Number	User's Load ID	Member ID	Joint ID	Fx (kips)	Fy (kips)	Fz (kips)	Mx (ft*kip)	My (ft*kip)	Mz (ft*kip)
1	CR+SH+PT_EOC	702	701	20.2	0	-72.9	0	383.7	0.1
2	CR+SH+PT_EOC	702	702	-20.2	0	72.9	0	571.3	0
3	CR+SH+PT_EOC	705	703	-285.8	0	2.9	0	-103.4	0
4	CR+SH+PT_EOC	705	704	285.8	0	-2.9	0	19.7	0
5	CR+SH+PT_EOC	708	705	123.1	0	14.3	0	-106.1	0
6	CR+SH+PT_EOC	708	706	-123.1	0	-14.3	0	-50.2	0
7	CR+SH+PT_EOC	711	707	-229.3	0	0.1	0	13.8	0
8	CR+SH+PT_EOC	711	708	229.3	0	-0.1	0	-16.2	0
9	CR+SH+PT_EOC	714	709	120.1	0	25	0	-151.7	0
10	CR+SH+PT_EOC	714	710	-120.1	0	-25	0	-144	0
11	CR+SH+PT_EOC	717	711	-248.2	0	-0.8	0	14.1	0
12	CR+SH+PT_EOC	717	712	248.2	0	0.8	0	5.9	0
13	CR+SH+PT_EOC	720	713	125.4	0	-15.5	0	105.7	0
14	CR+SH+PT_EOC	720	714	-125.4	0	15.5	0	100.8	0
15	CR+SH+PT_EOC	723	715	-186	0	-1.8	0	17.9	0
16	CR+SH+PT_EOC	723	716	186	0	1.8	0	18.5	0
17	CR+SH+PT_EOC	726	717	108.2	0	-5.7	0	42.4	0
18	CR+SH+PT_EOC	726	718	-108.2	0	5.7	0	52.6	0
19	CR+SH+PT_EOC	729	719	-108.6	0	-6.8	0	49.8	0
20	CR+SH+PT_EOC	729	720	108.6	0	6.8	0	58.3	0
21	CR+SH+PT_EOC	732	721	34.6	0	-2.9	0	41.9	0
22	CR+SH+PT_EOC	732	722	-34.6	0	2.9	0	23	0
1	DC	702	701	61.9	0	1.4	0.1	3.4	-0.3
2	DC	702	702	-51.6	0	-1.4	-0.1	-21.8	-0.1
3	DC	705	703	1848.7	0	0.7	-0.1	297.5	0.1
4	DC	705	704	-1839.2	0	20.2	0.1	-13.2	0
5	DC	708	705	-608.9	0	-26.1	0	190.6	0.1
6	DC	708	706	614.4	0	27.8	0	104.6	0
7	DC	711	707	732.1	0	3.7	0	37.7	0.1
8	DC	711	708	-725.8	0	8.8	0	30.6	0
9	DC	714	709	-243.2	0	-16.1	0	83.9	0
10	DC	714	710	249.4	0	16.2	0	106.9	0
11	DC	717	711	27.8	0	3.5	0	31.3	0
12	DC	717	712	-21.5	0	7.3	0	13.8	0
13	DC	720	713	86	0	-6.5	0	59.7	0
14	DC	720	714	-79.5	0	9	0	43.1	0
15	DC	723	715	-587	0	1.2	0	29.4	0
16	DC	723	716	593.4	0	7.2	0	31.7	0
17	DC	726	717	599.6	0	-6.6	0	110.5	0
18	DC	726	718	-593.2	0	12.5	0	48.2	0
19	DC	729	719	-870.9	0	12.6	0	-101.3	0
20	DC	729	720	877.5	0	-7.4	0	-57.1	-0.1
21	DC	732	721	1382.1	0	10.3	0	-66.5	0
22	DC	732	722	-1375.9	0	-0.2	0	-52.3	0
1	DW	702	701	0	0	0	0	0	0
2	DW	702	702	0	0	0	0	0	0
3	DW	705	703	82.2	0	-0.5	0	19.8	0
4	DW	705	704	-82.2	0	0.5	0	-5.3	0
5	DW	708	705	-34	0	-0.5	0	5.3	0
6	DW	708	706	34	0	0.5	0	0.5	0
7	DW	711	707	16.7	0	-0.1	0	2.1	0
8	DW	711	708	-16.7	0	0.1	0	-0.3	0
9	DW	714	709	-13.6	0	0	0	-0.5	0
10	DW	714	710	13.6	0	0	0	0	0
11	DW	717	711	-19.8	0	-0.1	0	1.8	0
12	DW	717	712	19.8	0	0.1	0	-0.3	0
13	DW	720	713	2	0	-0.9	0	6.1	0
14	DW	720	714	-2	0	0.9	0	5.7	0
15	DW	723	715	-46.3	0	-0.1	0	1.5	0
16	DW	723	716	46.3	0	0.1	0	0.8	0
17	DW	726	717	22.2	0	-0.6	0	5.7	0
18	DW	726	718	-22.2	0	0.6	0	3.9	0
19	DW	729	719	-55	0	0.2	0	-2.6	0
20	DW	729	720	55	0	-0.2	0	-1.3	0
21	DW	732	721	48.8	0	0	0	0	0
22	DW	732	722	-48.8	0	0	0	-1	0

Load (Row) Number	User's Load ID	Member ID	Joint ID	Fx (kips)	Fy (kips)	Fz (kips)	Mx (ft*kip)	My (ft*kip)	Mz (ft*kip)
1	TU-	702	701	0	0	0	0	0	0
2	TU-	702	702	0	0	0	0	0	0
3	TU-	705	703	-167	0	-0.2	0	-6.3	0
4	TU-	705	704	167	0	0.2	0	11.5	0
5	TU-	708	705	32	0	3	0	-20.8	0
6	TU-	708	706	-32	0	-3	0	-11.9	0
7	TU-	711	707	-75.4	0	0.2	0	-4.7	0
8	TU-	711	708	75.4	0	-0.2	0	0	0
9	TU-	714	709	7.9	0	1.5	0	-8.3	0
10	TU-	714	710	-7.9	0	-1.5	0	-9.3	0
11	TU-	717	711	-17.3	0	0.1	0	-2.2	0
12	TU-	717	712	17.3	0	-0.1	0	0.9	0
13	TU-	720	713	-14.9	0	0	0	-0.6	0
14	TU-	720	714	14.9	0	0	0	0.1	0
15	TU-	723	715	27.7	0	0.2	0	-2.4	0
16	TU-	723	716	-27.7	0	-0.2	0	-1.2	0
17	TU-	726	717	-60	0	0.9	0	-11.7	0
18	TU-	726	718	60	0	-0.9	0	-2.7	0
19	TU-	729	719	47.4	0	-1.3	0	14.7	0
20	TU-	729	720	-47.4	0	1.3	0	6	0
21	TU-	732	721	-220.3	0	-1.4	0	14.7	0
22	TU-	732	722	220.3	0	1.4	0	18	0
1	TU+	702	701	0	0	0	0	0	0
2	TU+	702	702	0	0	0	0	0	0
3	TU+	705	703	167	0	0.2	0	6.3	0
4	TU+	705	704	-167	0	-0.2	0	-11.5	0
5	TU+	708	705	-32	0	-3	0	20.8	0
6	TU+	708	706	32	0	3	0	11.9	0
7	TU+	711	707	75.4	0	-0.2	0	4.7	0
8	TU+	711	708	-75.4	0	0.2	0	0	0
9	TU+	714	709	-7.9	0	-1.5	0	8.3	0
10	TU+	714	710	7.9	0	1.5	0	9.3	0
11	TU+	717	711	17.3	0	-0.1	0	2.2	0
12	TU+	717	712	-17.3	0	0.1	0	-0.9	0
13	TU+	720	713	14.9	0	0	0	0.6	0
14	TU+	720	714	-14.9	0	0	0	-0.1	0
15	TU+	723	715	-27.7	0	-0.2	0	2.4	0
16	TU+	723	716	27.7	0	0.2	0	1.2	0
17	TU+	726	717	60	0	-0.9	0	11.7	0
18	TU+	726	718	-60	0	0.9	0	2.7	0
19	TU+	729	719	-47.4	0	1.3	0	-14.7	0
20	TU+	729	720	47.4	0	-1.3	0	-6	0
21	TU+	732	721	220.3	0	1.4	0	-14.7	0
22	TU+	732	722	-220.3	0	-1.4	0	-18	0
1	TU+Temp. Diff.	702	701	0	0	0	0	0	0
2	TU+Temp. Diff.	702	702	0	0	0	0	0	0
3	TU+Temp. Diff.	705	703	338.8	0	-0.1	0	24.9	0
4	TU+Temp. Diff.	705	704	-338.8	0	0.1	0	-21.2	0
5	TU+Temp. Diff.	708	705	-58.7	0	-5.4	0	38	0
6	TU+Temp. Diff.	708	706	58.7	0	5.4	0	21	0
7	TU+Temp. Diff.	711	707	133.9	0	-0.3	0	8.5	0
8	TU+Temp. Diff.	711	708	-133.9	0	0.3	0	0	0
9	TU+Temp. Diff.	714	709	-3.6	0	-2.5	0	13.5	0
10	TU+Temp. Diff.	714	710	3.6	0	2.5	0	16.3	0
11	TU+Temp. Diff.	717	711	10.3	0	-0.1	0	3.9	0
12	TU+Temp. Diff.	717	712	-10.3	0	0.1	0	-1.4	0
13	TU+Temp. Diff.	720	713	44.5	0	-0.5	0	5	0
14	TU+Temp. Diff.	720	714	-44.5	0	0.5	0	2.3	0
15	TU+Temp. Diff.	723	715	-75.7	0	-0.2	0	2.1	0
16	TU+Temp. Diff.	723	716	75.7	0	0.2	0	1.6	0
17	TU+Temp. Diff.	726	717	121	0	-1.3	0	17.3	0
18	TU+Temp. Diff.	726	718	-121	0	1.3	0	3.6	0
19	TU+Temp. Diff.	729	719	-102.2	0	2.6	0	-26	0
20	TU+Temp. Diff.	729	720	102.2	0	-2.6	0	-15.1	0
21	TU+Temp. Diff.	732	721	311.6	0	1.9	0	-20.3	0
22	TU+Temp. Diff.	732	722	-311.6	0	-1.9	0	-21.7	0

Load (Row) Number	User's Load ID	Member ID	Joint ID	Fx (kips)	Fy (kips)	Fz (kips)	Mx (ft*kip)	My (ft*kip)	Mz (ft*kip)
1	WS_0 DEG	702	701	0	31.3	0	0	0	578.5
2	WS_0 DEG	702	702	0	-32.9	0	0	0	-174.2
3	WS_0 DEG	705	703	0	-5.9	0	91.7	0	-96
4	WS_0 DEG	705	704	0	2.4	0	-91.7	0	-24.9
5	WS_0 DEG	708	705	0	-15.2	0	28.3	0	-171.3
6	WS_0 DEG	708	706	0	13.9	0	-28.3	0	11.4
7	WS_0 DEG	711	707	0	-3.1	0	27.4	0	-37.2
8	WS_0 DEG	711	708	0	-0.1	0	-27.4	0	-4
9	WS_0 DEG	714	709	0	-6.2	0	7.2	0	-98
10	WS_0 DEG	714	710	0	4.8	0	-7.2	0	33.2
11	WS_0 DEG	717	711	0	-2.4	0	16.2	0	-21.8
12	WS_0 DEG	717	712	0	-0.4	0	-16.2	0	-2.2
13	WS_0 DEG	720	713	0	2.6	0	-5.2	0	54.2
14	WS_0 DEG	720	714	0	-1	0	5.2	0	-30.1
15	WS_0 DEG	723	715	0	-1.9	0	11.8	0	-13.6
16	WS_0 DEG	723	716	0	-0.5	0	-11.8	0	-0.1
17	WS_0 DEG	726	717	0	1.6	0	-11.6	0	33.7
18	WS_0 DEG	726	718	0	0.4	0	11.6	0	-23.3
19	WS_0 DEG	729	719	0	-1.2	0	14.1	0	-16.1
20	WS_0 DEG	729	720	0	-0.7	0	-14.1	0	11.4
21	WS_0 DEG	732	721	0	2	0	-17.8	0	30.5
22	WS_0 DEG	732	722	0	0.7	0	17.8	0	-16.7
1	WS_15 DEG	702	701	0	5.5	0.4	0	-1.7	108.7
2	WS_15 DEG	702	702	0	-6.9	-0.2	0	-2.2	-28.2
3	WS_15 DEG	705	703	-14.8	-5.4	-0.1	85.2	0.4	-88.5
4	WS_15 DEG	705	704	14.3	2.1	0.3	-85.2	6.3	-21.8
5	WS_15 DEG	708	705	5	-13.8	0	26.2	-1.3	-157.5
6	WS_15 DEG	708	706	-5	12.6	0.1	-26.2	1.9	12.8
7	WS_15 DEG	711	707	-10.7	-2.9	0.1	25.5	-0.3	-34.4
8	WS_15 DEG	711	708	10.2	-0.1	0.1	-25.5	1.2	-3
9	WS_15 DEG	714	709	4.2	-5.5	0.3	6.5	-1.7	-90.2
10	WS_15 DEG	714	710	-4.2	4.2	0	-6.5	-0.1	32.5
11	WS_15 DEG	717	711	-8.5	-2.3	0.1	15.3	-0.4	-20.3
12	WS_15 DEG	717	712	8.1	-0.4	0.1	-15.3	1.1	-1.3
13	WS_15 DEG	720	713	3.5	2.3	-0.1	-5.1	0.4	50.3
14	WS_15 DEG	720	714	-3.4	-0.8	-0.1	5.1	-0.6	-29.1
15	WS_15 DEG	723	715	-6.1	-1.7	0.1	11.3	-0.1	-12.9
16	WS_15 DEG	723	716	5.8	-0.5	0.2	-11.3	1	0.6
17	WS_15 DEG	726	717	3.9	1.5	-0.2	-11.2	1.3	31.6
18	WS_15 DEG	726	718	-3.7	0.4	0	11.2	-0.1	-22
19	WS_15 DEG	729	719	-1.7	-1.2	0.2	13.5	-1.8	-15.7
20	WS_15 DEG	729	720	1.5	-0.6	0	-13.5	0.1	11.4
21	WS_15 DEG	732	721	4.3	1.9	0.2	-16.9	-4	28.8
22	WS_15 DEG	732	722	-4	0.7	-0.4	16.9	-2.4	-15.6
1	WS_-15 DEG	702	701	0	5.5	-0.4	0	1.7	108.7
2	WS_-15 DEG	702	702	0	-6.9	0.2	0	2.2	-28.2
3	WS_-15 DEG	705	703	14.8	-5.4	0.1	85.2	-0.4	-88.5
4	WS_-15 DEG	705	704	-14.3	2.1	-0.3	-85.2	-6.3	-21.8
5	WS_-15 DEG	708	705	-5	-13.8	0	26.2	1.3	-157.5
6	WS_-15 DEG	708	706	5	12.6	-0.1	-26.2	-1.9	12.8
7	WS_-15 DEG	711	707	10.7	-2.9	-0.1	25.5	0.3	-34.4
8	WS_-15 DEG	711	708	-10.2	-0.1	-0.1	-25.5	-1.2	-3
9	WS_-15 DEG	714	709	-4.2	-5.5	-0.3	6.5	1.7	-90.2
10	WS_-15 DEG	714	710	4.2	4.2	0	-6.5	0.1	32.5
11	WS_-15 DEG	717	711	8.5	-2.3	-0.1	15.3	0.4	-20.3
12	WS_-15 DEG	717	712	-8.1	-0.4	-0.1	-15.3	-1.1	-1.3
13	WS_-15 DEG	720	713	-3.5	2.3	0.1	-5.1	-0.4	50.3
14	WS_-15 DEG	720	714	3.4	-0.8	0.1	5.1	0.6	-29
15	WS_-15 DEG	723	715	6.1	-1.7	-0.1	11.3	0.1	-12.9
16	WS_-15 DEG	723	716	-5.8	-0.5	-0.2	-11.3	-1	0.6
17	WS_-15 DEG	726	717	-3.9	1.5	0.2	-11.2	-1.3	31.6
18	WS_-15 DEG	726	718	3.7	0.4	0	11.2	0.1	-22
19	WS_-15 DEG	729	719	1.7	-1.2	-0.2	13.5	1.8	-15.7
20	WS_-15 DEG	729	720	-1.5	-0.6	0	-13.5	-0.1	11.4
21	WS_-15 DEG	732	721	-4.3	1.9	-0.2	-16.9	4	28.8
22	WS_-15 DEG	732	722	4	0.7	0.4	16.9	2.4	-15.6

Load (Row) Number	User's Load ID	Member ID	Joint ID	Fx (kips)	Fy (kips)	Fz (kips)	Mx (ft*kip)	My (ft*kip)	Mz (ft*kip)
1	WS_30 DEG	702	701	0	48.3	-12	0	81.7	1089.3
2	WS_30 DEG	702	702	0	-49.6	12.5	0	70.3	-488.8
3	WS_30 DEG	705	703	-29.7	-5	-0.2	77.1	0.6	-80.4
4	WS_30 DEG	705	704	28.6	1.9	0.7	-77.1	12.1	-20.1
5	WS_30 DEG	708	705	9.9	-12.6	0.2	23.7	-2.8	-142.9
6	WS_30 DEG	708	706	-10.1	11.5	0.3	-23.7	3.4	10.8
7	WS_30 DEG	711	707	-21.7	-2.7	0.2	23	-0.8	-31.2
8	WS_30 DEG	711	708	20.6	-0.1	0.3	-23	2.5	-2.8
9	WS_30 DEG	714	709	8.4	-5.1	0.6	5.9	-3.5	-81.4
10	WS_30 DEG	714	710	-8.5	3.8	-0.1	-5.9	-0.4	28.9
11	WS_30 DEG	717	711	-17.2	-2.1	0.2	13.7	-0.8	-18.3
12	WS_30 DEG	717	712	16.3	-0.4	0.3	-13.7	2.3	-1.3
13	WS_30 DEG	720	713	7.2	2.1	-0.3	-4.5	0.9	45.1
14	WS_30 DEG	720	714	-7	-0.7	-0.3	4.5	-1.1	-26
15	WS_30 DEG	723	715	-12.6	-1.6	0.2	10	-0.2	-11.4
16	WS_30 DEG	723	716	11.9	-0.5	0.4	-10	2.1	0.4
17	WS_30 DEG	726	717	8.4	1.4	-0.4	-9.9	2.8	28.4
18	WS_30 DEG	726	718	-7.9	0.3	-0.1	9.9	-0.1	-19.8
19	WS_30 DEG	729	719	-3.8	-1.1	0.5	12	-4	-13.8
20	WS_30 DEG	729	720	3.3	-0.6	0	-12	0.1	10.1
21	WS_30 DEG	732	721	9.9	1.7	0.3	-15.2	-8.4	26
22	WS_30 DEG	732	722	-9.1	0.7	-0.9	15.2	-5.2	-14.1
1	WS_-30 DEG	702	701	0	48.3	12	0	-81.7	1089.3
2	WS_-30 DEG	702	702	0	-49.6	-12.5	0	-70.3	-488.8
3	WS_-30 DEG	705	703	29.7	-5	0.2	77.1	-0.6	-80.4
4	WS_-30 DEG	705	704	-28.5	1.9	-0.7	-77.1	-12.1	-20.1
5	WS_-30 DEG	708	705	-9.9	-12.6	-0.2	23.7	2.8	-142.8
6	WS_-30 DEG	708	706	10.1	11.5	-0.3	-23.7	-3.4	10.8
7	WS_-30 DEG	711	707	21.6	-2.7	-0.2	23	0.8	-31.2
8	WS_-30 DEG	711	708	-20.6	-0.1	-0.3	-23	-2.5	-2.8
9	WS_-30 DEG	714	709	-8.4	-5.1	-0.6	5.9	3.5	-81.4
10	WS_-30 DEG	714	710	8.4	3.8	0.1	-5.9	0.4	28.9
11	WS_-30 DEG	717	711	17.2	-2.1	-0.2	13.7	0.8	-18.3
12	WS_-30 DEG	717	712	-16.3	-0.4	-0.3	-13.7	-2.3	-1.3
13	WS_-30 DEG	720	713	-7.1	2.1	0.3	-4.5	-0.9	45.1
14	WS_-30 DEG	720	714	6.9	-0.7	0.3	4.5	1.1	-26
15	WS_-30 DEG	723	715	12.6	-1.6	-0.2	10	0.2	-11.5
16	WS_-30 DEG	723	716	-11.9	-0.5	-0.4	-10	-2.1	0.4
17	WS_-30 DEG	726	717	-8.4	1.4	0.4	-9.9	-2.8	28.4
18	WS_-30 DEG	726	718	7.9	0.3	0.1	9.9	0.1	-19.8
19	WS_-30 DEG	729	719	3.8	-1.1	-0.5	12	4	-13.8
20	WS_-30 DEG	729	720	-3.3	-0.6	0	-12	-0.1	10.1
21	WS_-30 DEG	732	721	-9.9	1.7	-0.3	-15.2	8.3	26
22	WS_-30 DEG	732	722	9.1	0.7	0.9	15.2	5.2	-14.1
1	WS_45 DEG	702	701	0	-89.6	1.1	0	-3.6	-1414.2
2	WS_45 DEG	702	702	0	88.6	-0.3	0	-4.9	272.2
3	WS_45 DEG	705	703	-43.1	-3.8	-0.2	60.7	0.9	-62.3
4	WS_45 DEG	705	704	41.3	1.5	1	-60.7	17.5	-14.9
5	WS_45 DEG	708	705	14.4	-9.6	0.3	18.6	-4.1	-111.4
6	WS_45 DEG	708	706	-14.6	8.8	0.4	-18.6	4.8	10.6
7	WS_45 DEG	711	707	-31.5	-2	0.3	18.4	-1.2	-24.3
8	WS_45 DEG	711	708	29.9	0	0.5	-18.4	3.6	-1.9
9	WS_45 DEG	714	709	12.3	-3.8	0.9	4.5	-5.2	-64.5
10	WS_45 DEG	714	710	-12.3	2.9	-0.1	-4.5	-0.6	24.3
11	WS_45 DEG	717	711	-25	-1.5	0.3	11.2	-1.3	-14.6
12	WS_45 DEG	717	712	23.7	-0.3	0.5	-11.2	3.3	-0.7
13	WS_45 DEG	720	713	10.5	1.6	-0.4	-3.9	1.3	36.4
14	WS_45 DEG	720	714	-10.2	-0.6	-0.4	3.9	-1.6	-21.4
15	WS_45 DEG	723	715	-18.5	-1.2	0.3	8.4	-0.4	-9.5
16	WS_45 DEG	723	716	17.4	-0.3	0.5	-8.4	3.1	0.7
17	WS_45 DEG	726	717	12.5	1.1	-0.6	-8.4	4.2	23
18	WS_45 DEG	726	718	-11.7	0.2	-0.2	8.4	-0.1	-16
19	WS_45 DEG	729	719	-5.6	-0.8	0.8	10	-5.9	-11.8
20	WS_45 DEG	729	720	4.9	-0.4	0	-10	0.1	8.5
21	WS_45 DEG	732	721	14.8	1.3	0.5	-12.4	-12.3	20.6
22	WS_45 DEG	732	722	-13.6	0.4	-1.3	12.4	-7.6	-11.1

Load (Row) Number	User's Load ID	Member ID	Joint ID	Fx (kips)	Fy (kips)	Fz (kips)	Mx (ft*kip)	My (ft*kip)	Mz (ft*kip)
1	WS_-45 DEG	702	701	0	-89.6	-1.1	0	3.6	-1414.2
2	WS_-45 DEG	702	702	0	88.6	0.3	0	4.9	272.2
3	WS_-45 DEG	705	703	43.1	-3.8	0.2	60.7	-0.9	-62.2
4	WS_-45 DEG	705	704	-41.3	1.5	-1	-60.7	-17.5	-14.9
5	WS_-45 DEG	708	705	-14.4	-9.6	-0.3	18.6	4.1	-111.4
6	WS_-45 DEG	708	706	14.6	8.8	-0.4	-18.6	-4.8	10.6
7	WS_-45 DEG	711	707	31.5	-2	-0.3	18.4	1.2	-24.3
8	WS_-45 DEG	711	708	-29.9	0	-0.5	-18.4	-3.6	-1.9
9	WS_-45 DEG	714	709	-12.3	-3.8	-0.9	4.5	5.2	-64.4
10	WS_-45 DEG	714	710	12.3	2.9	0.1	-4.5	0.6	24.3
11	WS_-45 DEG	717	711	25	-1.5	-0.3	11.2	1.3	-14.6
12	WS_-45 DEG	717	712	-23.7	-0.3	-0.5	-11.2	-3.3	-0.7
13	WS_-45 DEG	720	713	-10.5	1.6	0.4	-3.9	-1.3	36.4
14	WS_-45 DEG	720	714	10.1	-0.6	0.4	3.9	1.6	-21.4
15	WS_-45 DEG	723	715	18.5	-1.2	-0.3	8.4	0.4	-9.5
16	WS_-45 DEG	723	716	-17.4	-0.3	-0.5	-8.4	-3.1	0.7
17	WS_-45 DEG	726	717	-12.4	1.1	0.6	-8.4	-4.2	23
18	WS_-45 DEG	726	718	11.7	0.2	0.2	8.4	0.1	-15.9
19	WS_-45 DEG	729	719	5.6	-0.8	-0.8	10	5.9	-11.8
20	WS_-45 DEG	729	720	-4.9	-0.4	0	-10	-0.1	8.5
21	WS_-45 DEG	732	721	-14.8	1.3	-0.5	-12.4	12.2	20.6
22	WS_-45 DEG	732	722	13.5	0.4	1.3	12.4	7.6	-11.1
1	WS_60 DEG	702	701	0	-44.8	5.6	0	-29.6	-707.1
2	WS_60 DEG	702	702	0	44.3	-4.6	0	-33.6	136.1
3	WS_60 DEG	705	703	-52.3	-2.1	-0.3	38.4	1	-37.9
4	WS_60 DEG	705	704	50.2	1	1.2	-38.4	21.3	-8.2
5	WS_60 DEG	708	705	17.5	-5.6	0.3	11.7	-5	-69.1
6	WS_60 DEG	708	706	-17.7	5.2	0.5	-11.7	5.8	9.8
7	WS_60 DEG	711	707	-38.2	-1.1	0.4	12	-1.4	-15
8	WS_60 DEG	711	708	36.3	0.1	0.6	-12	4.4	-0.8
9	WS_60 DEG	714	709	14.9	-2.2	1.1	2.7	-6.3	-41.2
10	WS_60 DEG	714	710	-14.9	1.8	-0.1	-2.7	-0.7	17.7
11	WS_60 DEG	717	711	-30.4	-0.8	0.4	7.7	-1.5	-9.4
12	WS_60 DEG	717	712	28.7	-0.1	0.6	-7.7	4.1	-0.1
13	WS_60 DEG	720	713	12.7	0.9	-0.5	-3.1	1.6	24.2
14	WS_60 DEG	720	714	-12.3	-0.4	-0.5	3.1	-2	-15
15	WS_60 DEG	723	715	-22.4	-0.7	0.3	6	-0.5	-6.6
16	WS_60 DEG	723	716	21.1	-0.1	0.7	-6	3.7	1
17	WS_60 DEG	726	717	15.1	0.6	-0.8	-6.1	5	15.4
18	WS_60 DEG	726	718	-14.2	0	-0.2	6.1	-0.2	-10.7
19	WS_60 DEG	729	719	-6.8	-0.5	0.9	7.1	-7.1	-8.8
20	WS_60 DEG	729	720	6	-0.1	0.1	-7.1	0.1	6.4
21	WS_60 DEG	732	721	17.9	0.7	0.6	-8.5	-14.8	13.2
22	WS_60 DEG	732	722	-16.3	0.2	-1.5	8.5	-9.2	-7.1
1	WS_-60 DEG	702	701	0	-44.8	-5.6	0	29.6	-707.1
2	WS_-60 DEG	702	702	0	44.3	4.6	0	33.6	136.1
3	WS_-60 DEG	705	703	52.3	-2.1	0.3	38.4	-1	-37.9
4	WS_-60 DEG	705	704	-50.2	1	-1.2	-38.4	-21.3	-8.2
5	WS_-60 DEG	708	705	-17.5	-5.6	-0.3	11.7	5	-69
6	WS_-60 DEG	708	706	17.8	5.2	-0.5	-11.7	-5.8	9.8
7	WS_-60 DEG	711	707	38.2	-1.1	-0.4	12	1.4	-15
8	WS_-60 DEG	711	708	-36.3	0.1	-0.6	-12	-4.4	-0.8
9	WS_-60 DEG	714	709	-14.9	-2.2	-1.1	2.7	6.3	-41.1
10	WS_-60 DEG	714	710	14.9	1.8	0.1	-2.7	0.7	17.7
11	WS_-60 DEG	717	711	30.4	-0.8	-0.4	7.7	1.5	-9.4
12	WS_-60 DEG	717	712	-28.7	-0.1	-0.6	-7.7	-4.1	0
13	WS_-60 DEG	720	713	-12.7	0.9	0.5	-3.1	-1.6	24.2
14	WS_-60 DEG	720	714	12.3	-0.4	0.5	3.1	2	-15
15	WS_-60 DEG	723	715	22.4	-0.7	-0.3	6	0.5	-6.6
16	WS_-60 DEG	723	716	-21.1	-0.1	-0.7	-6	-3.7	1
17	WS_-60 DEG	726	717	-15	0.6	0.8	-6.1	-5	15.4
18	WS_-60 DEG	726	718	14.1	0	0.2	6.1	0.2	-10.7
19	WS_-60 DEG	729	719	6.8	-0.5	-0.9	7.1	7.1	-8.8
20	WS_-60 DEG	729	720	-6	-0.1	-0.1	-7.1	-0.1	6.4
21	WS_-60 DEG	732	721	-17.9	0.7	-0.6	-8.5	14.8	13.2
22	WS_-60 DEG	732	722	16.3	0.2	1.5	8.5	9.2	-7.1

Load (Row) Number	User's Load ID	Member ID	Joint ID	Fx (kips)	Fy (kips)	Fz (kips)	Mx (ft*kip)	My (ft*kip)	Mz (ft*kip)
1	WS+WUP	702	701	0	31.3	0	0	0	578.5
2	WS+WUP	702	702	0	-32.9	0	0	0	-174.2
3	WS+WUP	705	703	-114.1	-7.8	-2.1	129.5	-6.8	-134.4
4	WS+WUP	705	704	114.1	4.3	2.1	-129.5	69	-41.4
5	WS+WUP	708	705	31.5	-16.8	-3.9	38.2	5.7	-203
6	WS+WUP	708	706	-31.5	15.5	3.9	-38.2	36.7	26.1
7	WS+WUP	711	707	-15.3	-3.5	0.3	31.6	-4.5	-42
8	WS+WUP	711	708	15.3	0.3	-0.3	-31.6	-3.6	-9.4
9	WS+WUP	714	709	9.4	-1.8	0.6	11.5	-0.4	-70.2
10	WS+WUP	714	710	-9.4	0.4	-0.6	-11.5	-6.3	57.1
11	WS+WUP	717	711	22.9	-2	0	12.6	-1	-10.9
12	WS+WUP	717	712	-22.9	-0.8	0	-12.6	1.3	-3.1
13	WS+WUP	720	713	-11.2	-3.6	1.1	2.3	-7.6	4.9
14	WS+WUP	720	714	11.2	5.2	-1.1	-2.3	-7.7	-63.2
15	WS+WUP	723	715	54.3	-0.1	0.1	5.6	-1.6	14.4
16	WS+WUP	723	716	-54.3	-2.3	-0.1	-5.6	-0.8	8.5
17	WS+WUP	726	717	-35.7	-1.9	0.7	-6.1	-7	5.3
18	WS+WUP	726	718	35.7	3.9	-0.7	6.1	-4.3	-53.3
19	WS+WUP	729	719	62.3	2.9	-0.5	10.1	4.5	28.8
20	WS+WUP	729	720	-62.3	-4.9	0.5	-10.1	2.7	33
21	WS+WUP	732	721	-65.5	1.6	-0.1	-21.2	1	32.5
22	WS+WUP	732	722	65.5	1.1	0.1	21.2	1.7	-27

Selected Limit States

SRV 1 - SERVICE I
SRV 3 - SERVICE III

Max/ Min ID	Load Num	Member Num	Joint Num	Limit State/ Combo ID	Fx (kips)	Fy (kips)	Fz (kips)	Mx (ft*kip)	My (ft*kip)	Mz (ft*kip)	Mxy (ft*kip)	Mxz (ft*kip)	Myz (ft*kip)
Max Fx	3	705	703	SRV 1/ 238	2564.4	-0.5	1.4	9.3	313.2	-9.6	313.3	13.3	313.3
Max Fy	1	702	701	SRV 1/ 10	87.0	16.2	-96.9	0.1	642.7	300.3	642.7	300.3	709.4
Max Fz	2	702	702	SRV 1/ 37	-76.7	0.2	100.3	-0.1	645.9	0.1	645.9	0.1	645.9
Max Mx	3	705	703	SRV 1/ 5	1868.6	-4.8	2.2	57.1	243.8	-80.2	250.4	98.4	256.7
Max My	1	702	701	SRV 1/ 37	87.0	-0.3	-100.0	0.1	663.0	-3.6	663.0	3.6	663.0
Max Mz	1	702	701	SRV 1/ 10	87.0	16.2	-96.9	0.1	642.7	300.3	642.7	300.3	709.4
Max Mxy	1	702	701	SRV 1/ 37	87.0	-0.3	-100.0	0.1	663.0	-3.6	663.0	3.6	663.0
Max Mxz	1	702	701	SRV 1/ 10	87.0	16.2	-96.9	0.1	642.7	300.3	642.7	300.3	709.4
Max Myz	1	702	701	SRV 1/ 10	87.0	16.2	-96.9	0.1	642.7	300.3	642.7	300.3	709.4
Min Fx	4	705	704	SRV 1/ 238	-2554.4	0.3	19.3	-9.3	-51.4	-2.6	52.2	9.6	51.4
Min Fy	2	702	702	SRV 1/ 10	-76.7	-16.5	96.9	-0.1	626.0	-89.8	626.0	89.8	632.4
Min Fz	1	702	701	SRV 1/ 37	87.0	-0.3	-100.0	0.1	663.0	-3.6	663.0	3.6	663.0
Min Mx	4	705	704	SRV 1/ 5	-1859.1	3.9	18.7	-57.1	-3.0	-46.7	57.2	73.7	46.7
Min My	4	705	704	SRV 1/ 240	-2251.1	0.3	14.8	-9.3	-94.3	-2.6	94.7	9.6	94.3
Min Mz	13	720	713	SRV 1/ 20	237.2	-9.7	-25.4	20.6	188.6	-109.8	189.7	111.7	218.3
Min Mxy	20	729	720	SRV 3/ 4	1161.1	0.0	-0.4	0.0	1.0	-0.1	1.0	0.1	1.0
Min Mxz	6	708	706	SRV 3/ 1	592.7	0.0	12.5	0.0	44.4	0.0	44.4	0.0	44.4
Min Myz	20	729	720	SRV 3/ 4	1161.1	0.0	-0.4	0.0	1.0	-0.1	1.0	0.1	1.0

Selected Limit States
SRV 1 - SERVICE I
SRV 3 - SERVICE III

	Combinded Results										
	Max/ Min ID	**Combo ID**	**Fx (kips)**	**Fy (kips)**	**Fz (kips)**	**Mx (ft*kip)**	**My (ft*kip)**	**Mz (ft*kip)**	**Mxy (ft*kip)**	**Mxz (ft*kip)**	**Myz (ft*kip)**
	Max Fx	SRV 1/ 1	87.0	7.8	-96.3	0.1	638.7	144.4	638.7	144.4	654.8
	Max Fy	SRV 1/ 10	87.0	16.2	-96.9	0.1	642.7	300.3	642.7	300.3	709.4
	Max Fz	SRV 1/ 316	82.1	-0.3	-67.8	0.1	362.8	-3.6	362.8	3.6	362.8
	Max Mx	SRV 1/ 1	87.0	7.8	-96.3	0.1	638.7	144.4	638.7	144.4	654.8
	Max My	SRV 1/ 37	87.0	-0.3	-100.0	0.1	663.0	-3.6	663.0	3.6	663.0
Load No.	Max Mz	SRV 1/ 10	87.0	16.2	-96.9	0.1	642.7	300.3	642.7	300.3	709.4
1	Max Mxy	SRV 1/ 37	87.0	-0.3	-100.0	0.1	663.0	-3.6	663.0	3.6	663.0
	Max Mxz	SRV 1/ 10	87.0	16.2	-96.9	0.1	642.7	300.3	642.7	300.3	709.4
Member	Max Myz	SRV 1/ 10	87.0	16.2	-96.9	0.1	642.7	300.3	642.7	300.3	709.4
702	Min Fx	SRV 1/ 244	82.1	7.8	-71.5	0.1	387.1	144.4	387.1	144.4	413.2
	Min Fy	SRV 1/ 28	87.0	-1.0	-96.1	0.1	636.9	-21.2	636.9	21.2	637.3
Joint	Min Fz	SRV 1/ 37	87.0	-0.3	-100.0	0.1	663.0	-3.6	663.0	3.6	663.0
701	Min Mx	SRV 1/ 1	87.0	7.8	-96.3	0.1	638.7	144.4	638.7	144.4	654.8
	Min My	SRV 1/ 316	82.1	-0.3	-67.8	0.1	362.8	-3.6	362.8	3.6	362.8
	Min Mz	SRV 1/ 28	87.0	-1.0	-96.1	0.1	636.9	-21.2	636.9	21.2	637.3
	Min Mxy	SRV 1/ 316	82.1	-0.3	-67.8	0.1	362.8	-3.6	362.8	3.6	362.8
	Min Mxz	SRV 3/ 1	82.1	0.0	-71.5	0.1	387.1	-0.2	387.1	0.2	387.1
	Min Myz	SRV 1/ 316	82.1	-0.3	-67.8	0.1	362.8	-3.6	362.8	3.6	362.8
	Max Fx	SRV 1/ 244	-71.8	-8.2	71.5	-0.1	549.5	-43.7	549.5	43.7	551.2
	Max Fy	SRV 1/ 28	-76.7	0.7	96.3	-0.1	622.9	10.6	622.9	10.6	623.0
	Max Fz	SRV 1/ 37	-76.7	0.2	100.3	-0.1	645.9	0.1	645.9	0.1	645.9
	Max Mx	SRV 1/ 1	-76.7	-8.2	96.3	-0.1	622.7	-43.7	622.7	43.7	624.2
	Max My	SRV 1/ 37	-76.7	0.2	100.3	-0.1	645.9	0.1	645.9	0.1	645.9
Load No.	Max Mz	SRV 1/ 28	-76.7	0.7	96.3	-0.1	622.9	10.6	622.9	10.6	623.0
2	Max Mxy	SRV 1/ 37	-76.7	0.2	100.3	-0.1	645.9	0.1	645.9	0.1	645.9
	Max Mxz	SRV 1/ 10	-76.7	-16.5	96.9	-0.1	626.0	-89.8	626.0	89.8	632.4
Member	Max Myz	SRV 1/ 37	-76.7	0.2	100.3	-0.1	645.9	0.1	645.9	0.1	645.9
702	Min Fx	SRV 1/ 1	-76.7	-8.2	96.3	-0.1	622.7	-43.7	622.7	43.7	624.2
	Min Fy	SRV 1/ 10	-76.7	-16.5	96.9	-0.1	626.0	-89.8	626.0	89.8	632.4
Joint	Min Fz	SRV 1/ 316	-71.8	0.2	67.5	-0.1	526.3	0.1	526.3	0.1	526.3
702	Min Mx	SRV 1/ 1	-76.7	-8.2	96.3	-0.1	622.7	-43.7	622.7	43.7	624.2
	Min My	SRV 1/ 316	-71.8	0.2	67.5	-0.1	526.3	0.1	526.3	0.1	526.3
	Min Mz	SRV 1/ 10	-76.7	-16.5	96.9	-0.1	626.0	-89.8	626.0	89.8	632.4
	Min Mxy	SRV 1/ 316	-71.8	0.2	67.5	-0.1	526.3	0.1	526.3	0.1	526.3
	Min Mxz	SRV 1/ 37	-76.7	0.2	100.3	-0.1	645.9	0.1	645.9	0.1	645.9
	Min Myz	SRV 1/ 316	-71.8	0.2	67.5	-0.1	526.3	0.1	526.3	0.1	526.3

			Combinded Results								
	Max/ Min ID	Combo ID	Fx (kips)	Fy (kips)	Fz (kips)	Mx (ft*kip)	My (ft*kip)	Mz (ft*kip)	Mxy (ft*kip)	Mxz (ft*kip)	Myz (ft*kip)
	Max Fx	SRV 1/ 238	2564.4	-0.5	1.4	9.3	313.2	-9.6	313.3	13.3	313.3
	Max Fy	SRV 3/ 8	1457.5	0.1	2.9	-1.7	205.7	1.9	205.7	2.6	205.7
	Max Fz	SRV 1/ 138	2078.1	-1.3	6.2	18.5	207.3	-20.5	208.2	27.7	208.3
	Max Mx	SRV 1/ 5	1868.6	-4.8	2.2	57.1	243.8	-80.2	250.4	98.4	256.7
	Max My	SRV 1/ 445	2322.5	-0.5	1.0	9.3	316.4	-9.6	316.6	13.3	316.6
Load No.	Max Mz	SRV 3/ 8	1457.5	0.1	2.9	-1.7	205.7	1.9	205.7	2.6	205.7
3	Max Mxy	SRV 1/ 427	2328.2	-1.3	1.0	18.5	316.3	-20.5	316.8	27.7	316.9
	Max Mxz	SRV 1/ 5	1868.6	-4.8	2.2	57.1	243.8	-80.2	250.4	98.4	256.7
Member	Max Myz	SRV 1/ 409	2336.1	-1.6	1.1	22.5	316.0	-25.1	316.8	33.7	317.0
705	Min Fx	SRV 1/ 286	1412.8	-0.5	2.9	9.3	203.1	-9.6	203.3	13.3	203.3
	Min Fy	SRV 1/ 5	1868.6	-4.8	2.2	57.1	243.8	-80.2	250.4	98.4	256.7
Joint	Min Fz	SRV 1/ 265	1822.4	-1.3	0.9	18.5	285.1	-20.5	285.7	27.7	285.8
703	Min Mx	SRV 3/ 8	1457.5	0.1	2.9	-1.7	205.7	1.9	205.7	2.6	205.7
	Min My	SRV 1/ 75	1749.9	-0.5	5.8	9.3	194.6	-9.6	194.8	13.3	194.8
	Min Mz	SRV 1/ 5	1868.6	-4.8	2.2	57.1	243.8	-80.2	250.4	98.4	256.7
	Min Mxy	SRV 1/ 75	1749.9	-0.5	5.8	9.3	194.6	-9.6	194.8	13.3	194.8
	Min Mxz	SRV 3/ 1	1718.7	0.0	1.5	-0.1	265.5	0.1	265.5	0.1	265.5
	Min Myz	SRV 1/ 75	1749.9	-0.5	5.8	9.3	194.6	-9.6	194.8	13.3	194.8
	Max Fx	SRV 1/ 286	-1403.8	0.3	18.2	-9.3	20.1	-2.6	22.1	9.6	20.2
	Max Fy	SRV 1/ 5	-1859.1	3.9	18.7	-57.1	-3.0	-46.7	57.2	73.7	46.7
	Max Fz	SRV 1/ 283	-1807.7	0.3	20.2	-9.3	-4.4	-2.6	10.3	9.6	5.1
	Max Mx	SRV 3/ 8	-1448.0	-0.1	18.0	1.7	13.7	0.7	13.8	1.8	13.8
	Max My	SRV 1/ 286	-1403.8	0.3	18.2	-9.3	20.1	-2.6	22.1	9.6	20.2
Load No.	Max Mz	SRV 3/ 8	-1448.0	-0.1	18.0	1.7	13.7	0.7	13.8	1.8	13.8
4	Max Mxy	SRV 1/ 240	-2251.1	0.3	14.8	-9.3	-94.3	-2.6	94.7	9.6	94.3
	Max Mxz	SRV 1/ 5	-1859.1	3.9	18.7	-57.1	-3.0	-46.7	57.2	73.7	46.7
Member	Max Myz	SRV 1/ 240	-2251.1	0.3	14.8	-9.3	-94.3	-2.6	94.7	9.6	94.3
705	Min Fx	SRV 1/ 238	-2554.4	0.3	19.3	-9.3	-51.4	-2.6	52.2	9.6	51.4
	Min Fy	SRV 3/ 8	-1448.0	-0.1	18.0	1.7	13.7	0.7	13.8	1.8	13.8
Joint	Min Fz	SRV 1/ 156	-2073.9	0.3	14.5	-9.3	-84.3	-2.6	84.8	9.6	84.3
704	Min Mx	SRV 1/ 5	-1859.1	3.9	18.7	-57.1	-3.0	-46.7	57.2	73.7	46.7
	Min My	SRV 1/ 240	-2251.1	0.3	14.8	-9.3	-94.3	-2.6	94.7	9.6	94.3
	Min Mz	SRV 1/ 5	-1859.1	3.9	18.7	-57.1	-3.0	-46.7	57.2	73.7	46.7
	Min Mxy	SRV 3/ 1	-1709.2	0.0	19.4	0.1	-2.7	0.0	2.7	0.1	2.7
	Min Mxz	SRV 3/ 1	-1709.2	0.0	19.4	0.1	-2.7	0.0	2.7	0.1	2.7
	Min Myz	SRV 3/ 1	-1709.2	0.0	19.4	0.1	-2.7	0.0	2.7	0.1	2.7

	Combinded Results										
	Max/ Min ID	**Combo ID**	**Fx (kips)**	**Fy (kips)**	**Fz (kips)**	**Mx (ft*kip)**	**My (ft*kip)**	**Mz (ft*kip)**	**Mxy (ft*kip)**	**Mxz (ft*kip)**	**Myz (ft*kip)**
	Max Fx	SRV 1/ 286	-468.0	-1.3	-8.2	2.6	60.4	-15.4	60.5	15.6	62.4
	Max Fy	SRV 3/ 8	-481.7	0.4	-8.9	-0.5	66.2	3.9	66.2	4.0	66.3
	Max Fz	SRV 1/ 282	-485.6	-1.3	-4.9	2.6	57.2	-15.3	57.3	15.5	59.2
	Max Mx	SRV 1/ 5	-560.4	-7.6	-16.3	9.1	112.9	-54.5	113.3	55.3	125.4
	Max My	SRV 1/ 238	-725.4	-1.3	-26.3	2.6	186.6	-15.2	186.6	15.4	187.2
Load No.	Max Mz	SRV 3/ 8	-481.7	0.4	-8.9	-0.5	66.2	3.9	66.2	4.0	66.3
5	Max Mxy	SRV 1/ 238	-725.4	-1.3	-26.3	2.6	186.6	-15.2	186.6	15.4	187.2
	Max Mxz	SRV 1/ 5	-560.4	-7.6	-16.3	9.1	112.9	-54.5	113.3	55.3	125.4
Member	Max Myz	SRV 1/ 166	-720.8	-3.6	-26.1	6.2	185.0	-37.8	185.1	38.3	188.8
708	Min Fx	SRV 1/ 238	-725.4	-1.3	-26.3	2.6	186.6	-15.2	186.6	15.4	187.2
	Min Fy	SRV 1/ 5	-560.4	-7.6	-16.3	9.1	112.9	-54.5	113.3	55.3	125.4
Joint	Min Fz	SRV 1/ 238	-725.4	-1.3	-26.3	2.6	186.6	-15.2	186.6	15.4	187.2
705	Min Mx	SRV 3/ 8	-481.7	0.4	-8.9	-0.5	66.2	3.9	66.2	4.0	66.3
	Min My	SRV 1/ 282	-485.6	-1.3	-4.9	2.6	57.2	-15.3	57.3	15.5	59.2
	Min Mz	SRV 1/ 5	-560.4	-7.6	-16.3	9.1	112.9	-54.5	113.3	55.3	125.4
	Min Mxy	SRV 1/ 282	-485.6	-1.3	-4.9	2.6	57.2	-15.3	57.3	15.5	59.2
	Min Mxz	SRV 3/ 7	-475.6	0.0	-8.5	0.0	63.4	0.0	63.4	0.0	63.4
	Min Myz	SRV 1/ 282	-485.6	-1.3	-4.9	2.6	57.2	-15.3	57.3	15.5	59.2
	Max Fx	SRV 1/ 238	731.0	1.2	27.8	-2.6	109.7	1.8	109.7	3.2	109.7
	Max Fy	SRV 1/ 5	565.9	7.2	18.0	-9.1	75.0	-27.0	75.6	28.5	79.7
	Max Fz	SRV 1/ 184	723.6	2.6	27.8	-5.0	111.2	0.9	111.3	5.1	111.2
	Max Mx	SRV 3/ 8	487.2	-0.4	10.6	0.5	41.5	0.6	41.5	0.7	41.5
	Max My	SRV 1/ 202	721.7	1.2	27.8	-2.6	111.5	1.8	111.6	3.2	111.5
Load No.	Max Mz	SRV 1/ 44	484.0	0.7	16.0	-2.0	71.2	2.5	71.3	3.2	71.3
6	Max Mxy	SRV 1/ 202	721.7	1.2	27.8	-2.6	111.5	1.8	111.6	3.2	111.5
	Max Mxz	SRV 1/ 5	565.9	7.2	18.0	-9.1	75.0	-27.0	75.6	28.5	79.7
Member	Max Myz	SRV 1/ 203	652.0	5.2	26.4	-5.5	108.8	-25.8	109.0	26.4	111.8
708	Min Fx	SRV 1/ 286	473.5	1.2	10.0	-2.6	40.1	1.8	40.2	3.2	40.2
	Min Fy	SRV 3/ 8	487.2	-0.4	10.6	0.5	41.5	0.6	41.5	0.7	41.5
Joint	Min Fz	SRV 1/ 300	498.4	2.6	6.7	-5.0	5.2	0.9	7.2	5.1	5.2
706	Min Mx	SRV 1/ 5	565.9	7.2	18.0	-9.1	75.0	-27.0	75.6	28.5	79.7
	Min My	SRV 1/ 318	500.4	1.2	6.7	-2.6	4.9	1.8	5.5	3.2	5.2
	Min Mz	SRV 1/ 5	565.9	7.2	18.0	-9.1	75.0	-27.0	75.6	28.5	79.7
	Min Mxy	SRV 1/ 318	500.4	1.2	6.7	-2.6	4.9	1.8	5.5	3.2	5.2
	Min Mxz	SRV 3/ 1	592.7	0.0	12.5	0.0	44.4	0.0	44.4	0.0	44.4
	Min Myz	SRV 1/ 318	500.4	1.2	6.7	-2.6	4.9	1.8	5.5	3.2	5.2

	Combinded Results										
	Max/ Min ID	**Combo ID**	**Fx (kips)**	**Fy (kips)**	**Fz (kips)**	**Mx (ft*kip)**	**My (ft*kip)**	**Mz (ft*kip)**	**Mxy (ft*kip)**	**Mxz (ft*kip)**	**Myz (ft*kip)**
	Max Fx	SRV 1/ 238	791.7	-0.3	2.7	2.6	79.4	-3.2	79.4	4.1	79.5
	Max Fy	SRV 3/ 8	431.1	0.1	3.9	-0.5	48.4	0.9	48.4	1.0	48.4
	Max Fz	SRV 1/ 286	401.5	-0.3	4.0	2.6	47.4	-3.2	47.5	4.1	47.5
	Max Mx	SRV 1/ 1	539.8	-0.8	3.4	5.6	64.6	-8.2	64.8	9.9	65.1
	Max My	SRV 1/ 238	791.7	-0.3	2.7	2.6	79.4	-3.2	79.4	4.1	79.5
Load No.	Max Mz	SRV 3/ 8	431.1	0.1	3.9	-0.5	48.4	0.9	48.4	1.0	48.4
7	Max Mxy	SRV 1/ 238	791.7	-0.3	2.7	2.6	79.4	-3.2	79.4	4.1	79.5
	Max Mxz	SRV 1/ 1	539.8	-0.8	3.4	5.6	64.6	-8.2	64.8	9.9	65.1
Member	Max Myz	SRV 1/ 229	790.0	-0.5	2.7	3.7	79.3	-5.1	79.4	6.3	79.5
711	Min Fx	SRV 1/ 286	401.5	-0.3	4.0	2.6	47.4	-3.2	47.5	4.1	47.5
	Min Fy	SRV 1/ 5	525.5	-1.4	3.5	0.0	61.4	-9.1	61.4	9.1	62.1
Joint	Min Fz	SRV 1/ 238	791.7	-0.3	2.7	2.6	79.4	-3.2	79.4	4.1	79.5
707	Min Mx	SRV 3/ 2	468.5	-0.4	3.8	-5.0	51.9	0.3	52.2	5.0	51.9
	Min My	SRV 1/ 286	401.5	-0.3	4.0	2.6	47.4	-3.2	47.5	4.1	47.5
	Min Mz	SRV 1/ 5	525.5	-1.4	3.5	0.0	61.4	-9.1	61.4	9.1	62.1
	Min Mxy	SRV 1/ 286	401.5	-0.3	4.0	2.6	47.4	-3.2	47.5	4.1	47.5
	Min Mxz	SRV 3/ 1	492.9	0.0	3.7	0.0	55.0	0.1	55.0	0.1	55.0
	Min Myz	SRV 1/ 286	401.5	-0.3	4.0	2.6	47.4	-3.2	47.5	4.1	47.5
	Max Fx	SRV 1/ 286	-395.6	0.0	8.7	-2.6	15.3	-0.4	15.5	2.6	15.3
	Max Fy	SRV 1/ 41	-509.4	0.6	9.1	3.1	12.9	-15.5	13.2	15.8	20.1
	Max Fz	SRV 1/ 193	-767.0	0.0	9.8	-3.7	12.1	-0.8	12.7	3.8	12.1
	Max Mx	SRV 3/ 2	-462.2	0.4	8.7	5.0	13.7	-11.7	14.6	12.7	18.0
	Max My	SRV 1/ 282	-429.0	0.0	8.9	-2.6	18.9	-0.4	19.1	2.6	18.9
Load No.	Max Mz	SRV 3/ 8	-424.8	-0.1	8.6	0.5	14.2	0.3	14.2	0.6	14.2
8	Max Mxy	SRV 1/ 273	-430.6	0.0	8.9	-3.7	18.7	-0.8	19.1	3.8	18.7
	Max Mxz	SRV 1/ 5	-519.2	0.6	9.0	0.0	11.9	-16.7	11.9	16.7	20.5
Member	Max Myz	SRV 1/ 266	-478.8	0.6	8.8	1.1	14.1	-16.3	14.1	16.3	21.5
711	Min Fx	SRV 1/ 238	-785.0	0.0	9.6	-2.6	10.3	-0.4	10.6	2.6	10.3
	Min Fy	SRV 1/ 8	-456.3	-0.1	8.9	-5.0	12.6	-1.2	13.5	5.1	12.7
Joint	Min Fz	SRV 1/ 313	-413.5	0.0	8.5	-3.7	13.5	-0.8	14.0	3.8	13.5
708	Min Mx	SRV 1/ 1	-533.5	0.0	9.1	-5.6	11.5	-1.6	12.8	5.8	11.6
	Min My	SRV 1/ 76	-575.7	0.0	9.1	-2.6	10.3	-0.4	10.6	2.6	10.3
	Min Mz	SRV 1/ 5	-519.2	0.6	9.0	0.0	11.9	-16.7	11.9	16.7	20.5
	Min Mxy	SRV 1/ 76	-575.7	0.0	9.1	-2.6	10.3	-0.4	10.6	2.6	10.3
	Min Mxz	SRV 3/ 1	-486.6	0.0	8.8	0.0	13.3	0.0	13.3	0.0	13.3
	Min Myz	SRV 1/ 76	-575.7	0.0	9.1	-2.6	10.3	-0.4	10.6	2.6	10.3

	Combinded Results										
	Max/ Min ID	**Combo ID**	**Fx (kips)**	**Fy (kips)**	**Fz (kips)**	**Mx (ft*kip)**	**My (ft*kip)**	**Mz (ft*kip)**	**Mxy (ft*kip)**	**Mxz (ft*kip)**	**Myz (ft*kip)**
	Max Fx	SRV 1/ 43	-93.4	-0.3	12.3	0.6	-88.7	-6.8	88.7	6.8	89.0
	Max Fy	SRV 1/ 38	-127.3	6.7	11.5	4.7	-84.2	81.1	84.3	81.2	116.9
	Max Fz	SRV 1/ 43	-93.4	-0.3	12.3	0.6	-88.7	-6.8	88.7	6.8	89.0
	Max Mx	SRV 1/ 5	-135.9	5.8	10.7	5.9	-79.6	69.6	79.8	69.9	105.8
	Max My	SRV 1/ 481	-203.1	-0.3	5.4	0.6	-49.5	-6.8	49.5	6.8	50.0
Load No.	Max Mz	SRV 1/ 38	-127.3	6.7	11.5	4.7	-84.2	81.1	84.3	81.2	116.9
9	Max Mxy	SRV 1/ 43	-93.4	-0.3	12.3	0.6	-88.7	-6.8	88.7	6.8	89.0
	Max Mxz	SRV 1/ 38	-127.3	6.7	11.5	4.7	-84.2	81.1	84.3	81.2	116.9
Member	Max Myz	SRV 1/ 38	-127.3	6.7	11.5	4.7	-84.2	81.1	84.3	81.2	116.9
714	Min Fx	SRV 1/ 400	-207.4	-0.3	6.4	0.6	-54.7	-6.8	54.7	6.8	55.1
	Min Fy	SRV 1/ 1	-156.1	-0.8	11.3	1.7	-83.4	-14.4	83.4	14.5	84.6
Joint	Min Fz	SRV 1/ 481	-203.1	-0.3	5.4	0.6	-49.5	-6.8	49.5	6.8	50.0
709	Min Mx	SRV 3/ 8	-125.1	0.3	10.7	-0.2	-78.8	3.1	78.8	3.1	78.8
	Min My	SRV 1/ 43	-93.4	-0.3	12.3	0.6	-88.7	-6.8	88.7	6.8	89.0
	Min Mz	SRV 1/ 1	-156.1	-0.8	11.3	1.7	-83.4	-14.4	83.4	14.5	84.6
	Min Mxy	SRV 1/ 481	-203.1	-0.3	5.4	0.6	-49.5	-6.8	49.5	6.8	50.0
	Min Mxz	SRV 3/ 1	-168.5	0.0	10.6	0.0	-78.2	0.0	78.2	0.0	78.2
	Min Myz	SRV 1/ 481	-203.1	-0.3	5.4	0.6	-49.5	-6.8	49.5	6.8	50.0
	Max Fx	SRV 1/ 400	213.6	0.2	-6.5	-0.6	-22.3	4.0	22.3	4.0	22.7
	Max Fy	SRV 1/ 1	162.3	0.5	-11.2	-1.7	-49.8	6.8	49.8	7.0	50.3
	Max Fz	SRV 1/ 481	209.3	0.2	-5.5	-0.6	-15.3	4.0	15.3	4.0	15.8
	Max Mx	SRV 3/ 8	131.3	-0.3	-10.6	0.2	-48.4	0.5	48.4	0.5	48.4
	Max My	SRV 1/ 483	149.2	0.2	-5.5	-0.6	-13.5	4.0	13.5	4.0	14.1
Load No.	Max Mz	SRV 1/ 8	108.1	0.0	-11.4	-1.5	-52.3	7.4	52.3	7.6	52.8
10	Max Mxy	SRV 1/ 43	99.6	0.2	-12.0	-0.6	-55.3	4.0	55.3	4.0	55.5
	Max Mxz	SRV 1/ 8	108.1	0.0	-11.4	-1.5	-52.3	7.4	52.3	7.6	52.8
Member	Max Myz	SRV 1/ 34	100.3	0.2	-12.0	-1.0	-55.2	5.2	55.2	5.3	55.5
714	Min Fx	SRV 1/ 43	99.6	0.2	-12.0	-0.6	-55.3	4.0	55.3	4.0	55.5
	Min Fy	SRV 1/ 38	133.5	-6.8	-11.2	-4.7	-50.3	-1.3	50.5	4.9	50.3
Joint	Min Fz	SRV 1/ 43	99.6	0.2	-12.0	-0.6	-55.3	4.0	55.3	4.0	55.5
710	Min Mx	SRV 1/ 5	142.1	-6.2	-10.6	-5.9	-47.3	0.9	47.7	5.9	47.3
	Min My	SRV 1/ 43	99.6	0.2	-12.0	-0.6	-55.3	4.0	55.3	4.0	55.5
	Min Mz	SRV 3/ 5	158.5	-5.3	-10.0	-3.4	-44.4	-4.7	44.5	5.8	44.7
	Min Mxy	SRV 1/ 483	149.2	0.2	-5.5	-0.6	-13.5	4.0	13.5	4.0	14.1
	Min Mxz	SRV 3/ 1	174.7	0.0	-10.5	0.0	-46.4	0.0	46.4	0.0	46.4
	Min Myz	SRV 1/ 483	149.2	0.2	-5.5	-0.6	-13.5	4.0	13.5	4.0	14.1

	Combinded Results										
	Max/ Min ID	**Combo ID**	**Fx (kips)**	**Fy (kips)**	**Fz (kips)**	**Mx (ft*kip)**	**My (ft*kip)**	**Mz (ft*kip)**	**Mxy (ft*kip)**	**Mxz (ft*kip)**	**Myz (ft*kip)**
	Max Fx	SRV 1/ 405	-216.6	-0.2	2.4	1.3	49.7	-1.5	49.7	2.0	49.7
	Max Fy	SRV 3/ 2	-286.5	0.6	2.6	-15.2	47.6	21.4	49.9	26.3	52.2
	Max Fz	SRV 1/ 30	-320.1	-0.3	2.9	1.6	44.5	-1.9	44.6	2.5	44.6
	Max Mx	SRV 1/ 1	-380.0	-0.5	2.5	2.2	51.8	-2.9	51.8	3.6	51.9
	Max My	SRV 1/ 238	-325.3	-0.2	2.1	1.3	59.4	-1.5	59.4	2.0	59.4
Load No.	Max Mz	SRV 1/ 38	-351.9	0.6	2.7	-17.7	48.2	25.3	51.3	30.9	54.4
11	Max Mxy	SRV 1/ 238	-325.3	-0.2	2.1	1.3	59.4	-1.5	59.4	2.0	59.4
	Max Mxz	SRV 1/ 38	-351.9	0.6	2.7	-17.7	48.2	25.3	51.3	30.9	54.4
Member	Max Myz	SRV 1/ 239	-298.6	0.5	2.3	-17.3	55.7	24.4	58.3	29.9	60.8
717	Min Fx	SRV 1/ 37	-388.1	-0.2	2.6	1.3	51.4	-1.5	51.4	2.0	51.4
	Min Fy	SRV 1/ 1	-380.0	-0.5	2.5	2.2	51.8	-2.9	51.8	3.6	51.9
Joint	Min Fz	SRV 1/ 148	-319.7	-0.3	2.1	1.6	57.7	-1.9	57.7	2.5	57.7
711	Min Mx	SRV 1/ 38	-351.9	0.6	2.7	-17.7	48.2	25.3	51.3	30.9	54.4
	Min My	SRV 1/ 286	-284.6	-0.2	2.8	1.3	43.5	-1.5	43.5	2.0	43.5
	Min Mz	SRV 1/ 1	-380.0	-0.5	2.5	2.2	51.8	-2.9	51.8	3.6	51.9
	Min Mxy	SRV 1/ 286	-284.6	-0.2	2.8	1.3	43.5	-1.5	43.5	2.0	43.5
	Min Mxz	SRV 3/ 1	-315.5	0.0	2.5	0.0	50.1	0.0	50.1	0.0	50.1
	Min Myz	SRV 1/ 286	-284.6	-0.2	2.8	1.3	43.5	-1.5	43.5	2.0	43.5
	Max Fx	SRV 1/ 37	394.0	-0.1	8.4	-1.3	19.7	0.0	19.7	1.3	19.7
	Max Fy	SRV 3/ 1	321.8	0.0	8.3	0.0	19.5	0.0	19.5	0.0	19.5
	Max Fz	SRV 1/ 112	339.1	-0.1	8.7	-1.6	17.3	-0.2	17.3	1.6	17.3
	Max Mx	SRV 1/ 38	357.8	-0.9	8.3	17.7	20.2	-8.9	26.9	19.8	22.1
	Max My	SRV 1/ 286	290.5	-0.1	8.2	-1.3	21.7	0.0	21.7	1.3	21.7
Load No.	Max Mz	SRV 1/ 44	331.0	-0.2	8.2	-0.9	20.9	0.8	20.9	1.2	20.9
12	Max Mxy	SRV 1/ 281	307.8	-0.9	8.3	17.7	20.7	-8.9	27.2	19.8	22.5
	Max Mxz	SRV 1/ 41	348.3	-0.8	8.3	17.3	20.0	-9.7	26.5	19.9	22.2
Member	Max Myz	SRV 1/ 284	298.3	-0.8	8.3	17.3	20.5	-9.7	26.8	19.9	22.7
717	Min Fx	SRV 1/ 405	223.3	-0.1	8.2	-1.3	17.7	0.0	17.7	1.3	17.7
	Min Fy	SRV 1/ 2	350.1	-1.0	8.2	16.8	19.3	-9.5	25.6	19.3	21.5
Joint	Min Fz	SRV 1/ 66	313.3	-0.1	7.9	-1.6	18.0	-0.2	18.0	1.6	18.0
712	Min Mx	SRV 1/ 1	386.3	-0.2	8.3	-2.2	18.8	-0.6	18.9	2.2	18.8
	Min My	SRV 1/ 238	332.0	-0.1	8.5	-1.3	15.1	0.0	15.2	1.3	15.1
	Min Mz	SRV 1/ 5	340.6	-0.9	8.2	16.4	19.1	-10.3	25.2	19.4	21.7
	Min Mxy	SRV 1/ 238	332.0	-0.1	8.5	-1.3	15.1	0.0	15.2	1.3	15.1
	Min Mxz	SRV 3/ 1	321.8	0.0	8.3	0.0	19.5	0.0	19.5	0.0	19.5
	Min Myz	SRV 1/ 238	332.0	-0.1	8.5	-1.3	15.1	0.0	15.2	1.3	15.1

	Combinded Results										
	Max/ Min ID	**Combo ID**	**Fx (kips)**	**Fy (kips)**	**Fz (kips)**	**Mx (ft*kip)**	**My (ft*kip)**	**Mz (ft*kip)**	**Mxy (ft*kip)**	**Mxz (ft*kip)**	**Myz (ft*kip)**
	Max Fx	SRV 1/ 201	304.0	0.0	-24.7	-0.3	185.5	2.6	185.5	2.6	185.5
	Max Fy	SRV 3/ 1	204.3	0.0	-25.5	0.0	188.7	0.0	188.7	0.0	188.7
	Max Fz	SRV 1/ 324	195.1	0.0	-22.8	-0.3	170.6	2.6	170.6	2.6	170.6
	Max Mx	SRV 1/ 2	235.2	-9.6	-25.3	20.6	188.4	-108.6	189.5	110.5	217.4
	Max My	SRV 1/ 199	301.8	0.0	-27.5	-0.3	205.5	2.6	205.5	2.6	205.5
Load No.	Max Mz	SRV 1/ 1	238.9	-0.1	-26.9	0.2	199.5	3.2	199.5	3.2	199.5
13	Max Mxy	SRV 1/ 199	301.8	0.0	-27.5	-0.3	205.5	2.6	205.5	2.6	205.5
	Max Mxz	SRV 1/ 20	237.2	-9.7	-25.4	20.6	188.6	-109.8	189.7	111.7	218.3
Member	Max Myz	SRV 1/ 182	296.6	-9.7	-25.9	20.6	194.2	-109.8	195.3	111.7	223.1
720	Min Fx	SRV 1/ 324	195.1	0.0	-22.8	-0.3	170.6	2.6	170.6	2.6	170.6
	Min Fy	SRV 1/ 11	236.1	-9.7	-25.3	20.6	188.5	-109.4	189.6	111.3	217.9
Joint	Min Fz	SRV 1/ 199	301.8	0.0	-27.5	-0.3	205.5	2.6	205.5	2.6	205.5
713	Min Mx	SRV 1/ 37	242.4	0.0	-27.0	-0.3	199.9	2.6	199.9	2.6	199.9
	Min My	SRV 1/ 324	195.1	0.0	-22.8	-0.3	170.6	2.6	170.6	2.6	170.6
	Min Mz	SRV 1/ 20	237.2	-9.7	-25.4	20.6	188.6	-109.8	189.7	111.7	218.3
	Min Mxy	SRV 1/ 324	195.1	0.0	-22.8	-0.3	170.6	2.6	170.6	2.6	170.6
	Min Mxz	SRV 3/ 1	204.3	0.0	-25.5	0.0	188.7	0.0	188.7	0.0	188.7
	Min Myz	SRV 1/ 324	195.1	0.0	-22.8	-0.3	170.6	2.6	170.6	2.6	170.6
	Max Fx	SRV 1/ 324	-188.7	0.2	25.5	0.3	150.1	-3.7	150.1	3.7	150.1
	Max Fy	SRV 1/ 2	-228.7	10.0	27.8	-20.6	165.2	-22.3	166.5	30.3	166.7
	Max Fz	SRV 1/ 226	-289.0	0.3	30.0	0.0	178.0	-5.2	178.0	5.2	178.1
	Max Mx	SRV 1/ 37	-235.9	0.2	29.3	0.3	175.3	-3.7	175.3	3.7	175.4
	Max My	SRV 1/ 235	-288.4	0.2	30.0	0.3	178.1	-3.7	178.1	3.7	178.1
Load No.	Max Mz	SRV 3/ 1	-197.8	0.0	28.0	0.0	166.4	0.0	166.4	0.0	166.4
14	Max Mxy	SRV 1/ 235	-288.4	0.2	30.0	0.3	178.1	-3.7	178.1	3.7	178.1
	Max Mxz	SRV 1/ 2	-228.7	10.0	27.8	-20.6	165.2	-22.3	166.5	30.3	166.7
Member	Max Myz	SRV 1/ 235	-288.4	0.2	30.0	0.3	178.1	-3.7	178.1	3.7	178.1
720	Min Fx	SRV 1/ 201	-297.5	0.2	27.0	0.3	159.4	-3.7	159.4	3.7	159.5
	Min Fy	SRV 3/ 1	-197.8	0.0	28.0	0.0	166.4	0.0	166.4	0.0	166.4
Joint	Min Fz	SRV 1/ 279	-195.0	0.3	25.3	0.0	149.6	-5.2	149.6	5.2	149.7
714	Min Mx	SRV 1/ 2	-228.7	10.0	27.8	-20.6	165.2	-22.3	166.5	30.3	166.7
	Min My	SRV 1/ 369	-225.4	0.2	25.3	0.3	149.3	-3.7	149.3	3.7	149.4
	Min Mz	SRV 1/ 2	-228.7	10.0	27.8	-20.6	165.2	-22.3	166.5	30.3	166.7
	Min Mxy	SRV 1/ 369	-225.4	0.2	25.3	0.3	149.3	-3.7	149.3	3.7	149.4
	Min Mxz	SRV 3/ 1	-197.8	0.0	28.0	0.0	166.4	0.0	166.4	0.0	166.4
	Min Myz	SRV 1/ 369	-225.4	0.2	25.3	0.3	149.3	-3.7	149.3	3.7	149.4

	Combinded Results										
	Max/ Min ID	**Combo ID**	**Fx (kips)**	**Fy (kips)**	**Fz (kips)**	**Mx (ft*kip)**	**My (ft*kip)**	**Mz (ft*kip)**	**Mxy (ft*kip)**	**Mxz (ft*kip)**	**Myz (ft*kip)**
	Max Fx	SRV 1/ 324	-785.3	-0.1	-0.6	0.8	46.3	-0.2	46.3	0.8	46.3
	Max Fy	SRV 1/ 38	-932.7	2.8	-0.3	-22.6	45.8	55.8	51.0	60.2	72.1
	Max Fz	SRV 1/ 30	-861.4	-0.1	-0.1	0.8	43.3	0.4	43.3	0.8	43.3
	Max Mx	SRV 1/ 1	-1011.1	-0.2	-0.6	0.8	48.6	0.8	48.6	1.2	48.6
	Max My	SRV 1/ 400	-1006.1	-0.1	-1.5	0.8	57.6	-0.2	57.6	0.8	57.6
Load No.	Max Mz	SRV 1/ 20	-930.0	2.8	-0.4	-22.7	45.8	56.9	51.1	61.3	73.0
15	Max Mxy	SRV 1/ 347	-933.5	2.6	-1.1	-22.5	54.4	55.8	58.9	60.2	77.9
	Max Mxz	SRV 1/ 20	-930.0	2.8	-0.4	-22.7	45.8	56.9	51.1	61.3	73.0
Member	Max Myz	SRV 1/ 344	-935.5	2.8	-1.1	-22.7	54.0	56.9	58.6	61.3	78.4
723	Min Fx	SRV 1/ 199	-1120.9	-0.1	-0.9	0.8	53.1	-0.2	53.1	0.8	53.1
	Min Fy	SRV 1/ 1	-1011.1	-0.2	-0.6	0.8	48.6	0.8	48.6	1.2	48.6
Joint	Min Fz	SRV 1/ 391	-1007.2	-0.1	-1.5	0.8	57.6	0.4	57.6	0.8	57.6
715	Min Mx	SRV 1/ 20	-930.0	2.8	-0.4	-22.7	45.8	56.9	51.1	61.3	73.0
	Min My	SRV 1/ 43	-851.9	-0.1	-0.1	0.8	42.2	-0.2	42.2	0.8	42.2
	Min Mz	SRV 1/ 37	-1017.5	-0.1	-0.5	0.8	48.6	-0.2	48.6	0.8	48.6
	Min Mxy	SRV 1/ 43	-851.9	-0.1	-0.1	0.8	42.2	-0.2	42.2	0.8	42.2
	Min Mxz	SRV 3/ 1	-927.3	0.0	-0.8	0.0	50.9	0.0	50.9	0.0	50.9
	Min Myz	SRV 1/ 43	-851.9	-0.1	-0.1	0.8	42.2	-0.2	42.2	0.8	42.2
	Max Fx	SRV 1/ 199	1127.1	-0.1	9.6	-0.8	54.0	0.5	54.0	0.9	54.0
	Max Fy	SRV 3/ 1	933.7	0.0	9.2	0.0	52.1	0.0	52.1	0.0	52.1
	Max Fz	SRV 1/ 364	1025.1	-0.1	10.0	-0.8	56.0	0.5	56.0	0.9	56.0
	Max Mx	SRV 1/ 20	936.2	-3.2	8.9	22.7	49.3	2.9	54.3	22.9	49.4
	Max My	SRV 1/ 442	1077.2	-0.1	9.9	-0.8	56.5	0.5	56.5	0.9	56.5
Load No.	Max Mz	SRV 1/ 11	934.3	-3.2	8.8	22.6	48.9	2.9	53.9	22.8	49.0
16	Max Mxy	SRV 1/ 443	992.4	-3.0	9.7	22.6	55.0	2.6	59.4	22.7	55.1
	Max Mxz	SRV 1/ 20	936.2	-3.2	8.9	22.7	49.3	2.9	54.3	22.9	49.4
Member	Max Myz	SRV 1/ 442	1077.2	-0.1	9.9	-0.8	56.5	0.5	56.5	0.9	56.5
723	Min Fx	SRV 1/ 324	792.0	-0.1	8.8	-0.8	48.8	0.5	48.8	0.9	48.8
	Min Fy	SRV 1/ 2	932.7	-3.3	8.8	22.6	48.7	2.7	53.7	22.7	48.8
Joint	Min Fz	SRV 1/ 75	856.4	-0.1	8.5	-0.8	46.5	0.5	46.5	0.9	46.5
716	Min Mx	SRV 1/ 1	1017.5	-0.4	9.0	-0.8	50.2	0.6	50.2	1.1	50.2
	Min My	SRV 1/ 81	841.9	-0.1	8.5	-0.8	46.3	0.5	46.3	0.9	46.3
	Min Mz	SRV 3/ 1	933.7	0.0	9.2	0.0	52.1	0.0	52.1	0.0	52.1
	Min Mxy	SRV 1/ 81	841.9	-0.1	8.5	-0.8	46.3	0.5	46.3	0.9	46.3
	Min Mxz	SRV 3/ 1	933.7	0.0	9.2	0.0	52.1	0.0	52.1	0.0	52.1
	Min Myz	SRV 1/ 81	841.9	-0.1	8.5	-0.8	46.3	0.5	46.3	0.9	46.3

			Combinded Results								
	Max/ Min ID	Combo ID	Fx (kips)	Fy (kips)	Fz (kips)	Mx (ft*kip)	My (ft*kip)	Mz (ft*kip)	Mxy (ft*kip)	Mxz (ft*kip)	Myz (ft*kip)
	Max Fx	SRV 1/ 202	955.1	0.0	-16.5	-0.9	197.2	2.1	197.2	2.3	197.2
	Max Fy	SRV 1/ 1	760.5	0.1	-14.1	-1.0	165.3	3.3	165.3	3.4	165.3
	Max Fz	SRV 1/ 79	665.7	0.0	-11.8	-0.9	141.6	2.1	141.6	2.3	141.6
	Max Mx	SRV 1/ 20	722.7	-4.7	-13.3	20.4	156.0	-55.1	157.3	58.8	165.4
	Max My	SRV 1/ 445	945.8	0.0	-16.5	-0.9	199.6	2.1	199.6	2.3	199.6
Load No.	Max Mz	SRV 1/ 1	760.5	0.1	-14.1	-1.0	165.3	3.3	165.3	3.4	165.3
17	Max Mxy	SRV 1/ 445	945.8	0.0	-16.5	-0.9	199.6	2.1	199.6	2.3	199.6
	Max Mxz	SRV 1/ 38	724.9	-4.7	-13.3	20.3	156.8	-55.5	158.1	59.1	166.3
Member	Max Myz	SRV 1/ 445	945.8	0.0	-16.5	-0.9	199.6	2.1	199.6	2.3	199.6
726	Min Fx	SRV 1/ 322	656.4	0.0	-11.8	-0.9	144.0	2.1	144.0	2.3	144.0
	Min Fy	SRV 1/ 11	721.2	-4.7	-13.2	20.3	155.4	-54.8	156.7	58.4	164.7
Joint	Min Fz	SRV 1/ 199	946.5	0.0	-16.5	-0.9	196.2	2.1	196.2	2.3	196.2
717	Min Mx	SRV 1/ 1	760.5	0.1	-14.1	-1.0	165.3	3.3	165.3	3.4	165.3
	Min My	SRV 1/ 79	665.7	0.0	-11.8	-0.9	141.6	2.1	141.6	2.3	141.6
	Min Mz	SRV 1/ 38	724.9	-4.7	-13.3	20.3	156.8	-55.5	158.1	59.1	166.3
	Min Mxy	SRV 1/ 79	665.7	0.0	-11.8	-0.9	141.6	2.1	141.6	2.3	141.6
	Min Mxz	SRV 3/ 1	735.0	0.0	-13.7	0.0	163.5	0.0	163.5	0.0	163.5
	Min Myz	SRV 1/ 79	665.7	0.0	-11.8	-0.9	141.6	2.1	141.6	2.3	141.6
	Max Fx	SRV 1/ 322	-650.2	0.1	17.9	0.9	102.0	-2.7	102.0	2.9	102.0
	Max Fy	SRV 1/ 2	-713.5	5.1	19.0	-20.2	110.9	-27.1	112.7	33.8	114.2
	Max Fz	SRV 1/ 190	-939.1	0.2	22.2	0.8	124.6	-4.1	124.6	4.2	124.6
	Max Mx	SRV 1/ 1	-754.1	0.4	20.0	1.0	118.0	-6.1	118.0	6.1	118.2
	Max My	SRV 1/ 199	-939.9	0.1	22.2	0.9	124.6	-2.8	124.6	2.9	124.7
Load No.	Max Mz	SRV 3/ 1	-728.6	0.0	19.6	0.0	113.4	0.0	113.4	0.0	113.4
18	Max Mxy	SRV 1/ 199	-939.9	0.1	22.2	0.9	124.6	-2.8	124.6	2.9	124.7
	Max Mxz	SRV 1/ 2	-713.5	5.1	19.0	-20.2	110.9	-27.1	112.7	33.8	114.2
Member	Max Myz	SRV 1/ 199	-939.9	0.1	22.2	0.9	124.6	-2.8	124.6	2.9	124.7
726	Min Fx	SRV 1/ 202	-948.5	0.1	22.2	0.9	124.3	-2.8	124.3	2.9	124.4
	Min Fy	SRV 3/ 1	-728.6	0.0	19.6	0.0	113.4	0.0	113.4	0.0	113.4
Joint	Min Fz	SRV 1/ 70	-660.3	0.2	17.9	0.8	103.8	-4.1	103.8	4.2	103.9
718	Min Mx	SRV 1/ 20	-716.2	5.1	19.0	-20.4	111.1	-26.1	112.9	33.1	114.1
	Min My	SRV 1/ 324	-657.4	0.1	17.9	0.9	101.7	-2.7	101.7	2.9	101.7
	Min Mz	SRV 1/ 2	-713.5	5.1	19.0	-20.2	110.9	-27.1	112.7	33.8	114.2
	Min Mxy	SRV 1/ 324	-657.4	0.1	17.9	0.9	101.7	-2.7	101.7	2.9	101.7
	Min Mxz	SRV 3/ 1	-728.6	0.0	19.6	0.0	113.4	0.0	113.4	0.0	113.4
	Min Myz	SRV 1/ 324	-657.4	0.1	17.9	0.9	101.7	-2.7	101.7	2.9	101.7

			Combinded Results								
	Max/ Min ID	Combo ID	Fx (kips)	Fy (kips)	Fz (kips)	Mx (ft*kip)	My (ft*kip)	Mz (ft*kip)	Mxy (ft*kip)	Mxz (ft*kip)	Myz (ft*kip)
	Max Fx	SRV 1/ 322	-977.2	0.0	4.2	1.2	-35.7	-0.2	35.7	1.2	35.7
	Max Fy	SRV 1/ 11	-1101.5	6.5	4.9	-15.8	-42.9	86.3	45.7	87.8	96.4
	Max Fz	SRV 1/ 445	-1347.9	0.0	10.0	1.2	-93.4	-0.2	93.4	1.2	93.4
	Max Mx	SRV 1/ 1	-1201.6	0.1	5.3	1.7	-47.0	2.0	47.0	2.6	47.0
	Max My	SRV 1/ 79	-990.4	0.0	3.9	1.2	-33.8	-0.2	33.8	1.2	33.8
Load No.	Max Mz	SRV 1/ 2	-1101.0	6.4	4.8	-15.7	-42.3	86.5	45.1	87.9	96.3
19	Max Mxy	SRV 1/ 445	-1347.9	0.0	10.0	1.2	-93.4	-0.2	93.4	1.2	93.4
	Max Mxz	SRV 1/ 2	-1101.0	6.4	4.8	-15.7	-42.3	86.5	45.1	87.9	96.3
Member	Max Myz	SRV 1/ 425	-1238.5	6.4	9.2	-16.0	-86.3	86.4	87.8	87.8	122.1
729	Min Fx	SRV 1/ 202	-1361.1	0.0	9.7	1.2	-91.5	-0.2	91.5	1.2	91.5
	Min Fy	SRV 3/ 1	-1148.1	0.0	5.4	0.0	-47.0	0.0	47.0	0.0	47.0
Joint	Min Fz	SRV 1/ 79	-990.4	0.0	3.9	1.2	-33.8	-0.2	33.8	1.2	33.8
719	Min Mx	SRV 1/ 38	-1102.9	6.3	5.1	-16.2	-44.9	84.3	47.7	85.8	95.5
	Min My	SRV 1/ 445	-1347.9	0.0	10.0	1.2	-93.4	-0.2	93.4	1.2	93.4
	Min Mz	SRV 1/ 37	-1203.5	0.0	5.6	1.2	-49.6	-0.2	49.6	1.2	49.6
	Min Mxy	SRV 1/ 79	-990.4	0.0	3.9	1.2	-33.8	-0.2	33.8	1.2	33.8
	Min Mxz	SRV 3/ 1	-1148.1	0.0	5.4	0.0	-47.0	0.0	47.0	0.0	47.0
	Min Myz	SRV 1/ 79	-990.4	0.0	3.9	1.2	-33.8	-0.2	33.8	1.2	33.8
	Max Fx	SRV 1/ 202	1367.5	-0.2	-4.3	-1.2	-18.6	1.8	18.7	2.1	18.7
	Max Fy	SRV 3/ 1	1154.7	0.0	-0.2	0.0	2.1	-0.1	2.1	0.1	2.1
	Max Fz	SRV 1/ 70	997.5	-0.4	1.1	-1.3	10.5	2.5	10.6	2.9	10.8
	Max Mx	SRV 1/ 38	1109.3	-6.5	0.3	16.2	6.3	17.4	17.4	23.8	18.5
	Max My	SRV 1/ 79	997.2	-0.2	1.1	-1.2	10.5	1.8	10.6	2.1	10.7
Load No.	Max Mz	SRV 1/ 2	1107.6	-6.9	0.4	15.7	6.5	19.2	17.0	24.7	20.2
20	Max Mxy	SRV 1/ 446	1249.7	-6.2	-4.0	15.9	-18.5	14.0	24.4	21.2	23.2
	Max Mxz	SRV 1/ 11	1108.0	-6.8	0.4	15.8	6.4	19.1	17.0	24.8	20.2
Member	Max Myz	SRV 1/ 416	1244.4	-6.8	-3.8	15.8	-17.6	19.1	23.6	24.8	26.0
729	Min Fx	SRV 1/ 322	984.0	-0.2	0.8	-1.2	7.6	1.8	7.7	2.1	7.8
	Min Fy	SRV 1/ 2	1107.6	-6.9	0.4	15.7	6.5	19.2	17.0	24.7	20.2
Joint	Min Fz	SRV 1/ 436	1354.0	-0.4	-4.6	-1.3	-21.5	2.5	21.5	2.9	21.6
720	Min Mx	SRV 1/ 1	1208.2	-0.6	-0.1	-1.7	4.1	3.6	4.5	4.0	5.4
	Min My	SRV 1/ 445	1354.3	-0.2	-4.6	-1.2	-21.5	1.8	21.6	2.1	21.6
	Min Mz	SRV 3/ 1	1154.7	0.0	-0.2	0.0	2.1	-0.1	2.1	0.1	2.1
	Min Mxy	SRV 3/ 4	1161.1	0.0	-0.4	0.0	1.0	-0.1	1.0	0.1	1.0
	Min Mxz	SRV 3/ 1	1154.7	0.0	-0.2	0.0	2.1	-0.1	2.1	0.1	2.1
	Min Myz	SRV 3/ 4	1161.1	0.0	-0.4	0.0	1.0	-0.1	1.0	0.1	1.0

			Combinded Results								
	Max/ Min ID	Combo ID	Fx (kips)	Fy (kips)	Fz (kips)	Mx (ft*kip)	My (ft*kip)	Mz (ft*kip)	Mxy (ft*kip)	Mxz (ft*kip)	Myz (ft*kip)
	Max Fx	SRV 1/ 445	1984.5	0.2	9.8	-1.9	-50.3	3.2	50.3	3.7	50.4
	Max Fy	SRV 1/ 2	1241.2	0.7	5.8	-2.8	-6.6	13.0	7.2	13.3	14.6
	Max Fz	SRV 1/ 442	1962.9	0.2	9.8	-1.9	-50.6	3.2	50.6	3.7	50.7
	Max Mx	SRV 3/ 2	1316.6	0.2	6.1	0.7	-9.9	4.3	9.9	4.4	10.8
	Max My	SRV 1/ 76	1344.7	0.2	5.6	-1.9	-0.6	3.2	2.0	3.7	3.3
Load No.	Max Mz	SRV 1/ 5	1252.0	0.7	5.8	-2.9	-6.4	14.1	7.0	14.4	15.5
21	Max Mxy	SRV 1/ 447	1811.4	0.2	9.7	-1.9	-51.8	3.2	51.8	3.7	51.9
	Max Mxz	SRV 1/ 5	1252.0	0.7	5.8	-2.9	-6.4	14.1	7.0	14.4	15.5
Member	Max Myz	SRV 1/ 447	1811.4	0.2	9.7	-1.9	-51.8	3.2	51.8	3.7	51.9
732	Min Fx	SRV 1/ 79	1123.1	0.2	5.4	-1.9	-1.2	3.2	2.2	3.7	3.5
	Min Fy	SRV 3/ 1	1387.9	0.0	6.2	0.0	-9.9	0.0	9.9	0.0	9.9
Joint	Min Fz	SRV 1/ 79	1123.1	0.2	5.4	-1.9	-1.2	3.2	2.2	3.7	3.5
721	Min Mx	SRV 1/ 1	1330.4	0.5	5.9	-3.7	-6.6	7.6	7.5	8.5	10.1
	Min My	SRV 1/ 447	1811.4	0.2	9.7	-1.9	-51.8	3.2	51.8	3.7	51.9
	Min Mz	SRV 3/ 8	1236.6	0.0	6.0	0.0	-10.0	-0.8	10.0	0.8	10.0
	Min Mxy	SRV 1/ 77	1244.7	0.4	5.5	-1.1	-0.7	9.7	1.3	9.8	9.8
	Min Mxz	SRV 3/ 1	1387.9	0.0	6.2	0.0	-9.9	0.0	9.9	0.0	9.9
	Min Myz	SRV 1/ 80	1133.9	0.2	5.4	-1.9	-1.0	2.2	2.1	2.9	2.5
	Max Fx	SRV 1/ 79	-1117.2	0.0	4.9	1.9	-3.8	-1.6	4.2	2.4	4.1
	Max Fy	SRV 1/ 1	-1324.2	0.2	4.2	3.7	-11.2	-3.6	11.8	5.1	11.8
	Max Fz	SRV 1/ 79	-1117.2	0.0	4.9	1.9	-3.8	-1.6	4.2	2.4	4.1
	Max Mx	SRV 1/ 1	-1324.2	0.2	4.2	3.7	-11.2	-3.6	11.8	5.1	11.8
	Max My	SRV 1/ 79	-1117.2	0.0	4.9	1.9	-3.8	-1.6	4.2	2.4	4.1
Load No.	Max Mz	SRV 3/ 8	-1230.4	0.0	4.1	0.0	-12.1	0.6	12.1	0.6	12.1
22	Max Mxy	SRV 1/ 445	-1977.9	0.0	0.1	1.9	-59.4	-1.6	59.5	2.4	59.5
	Max Mxz	SRV 1/ 5	-1245.8	-0.1	4.3	2.9	-9.8	-6.0	10.2	6.6	11.5
Member	Max Myz	SRV 1/ 445	-1977.9	0.0	0.1	1.9	-59.4	-1.6	59.5	2.4	59.5
732	Min Fx	SRV 1/ 445	-1977.9	0.0	0.1	1.9	-59.4	-1.6	59.5	2.4	59.5
	Min Fy	SRV 1/ 38	-1242.0	-0.2	3.8	1.0	-12.7	-3.3	12.8	3.4	13.2
Joint	Min Fz	SRV 1/ 442	-1956.3	0.0	0.1	1.9	-58.7	-1.6	58.8	2.4	58.8
722	Min Mx	SRV 3/ 2	-1310.4	-0.2	4.0	-0.7	-13.7	-1.4	13.8	1.5	13.8
	Min My	SRV 1/ 445	-1977.9	0.0	0.1	1.9	-59.4	-1.6	59.5	2.4	59.5
	Min Mz	SRV 1/ 5	-1245.8	-0.1	4.3	2.9	-9.8	-6.0	10.2	6.6	11.5
	Min Mxy	SRV 1/ 79	-1117.2	0.0	4.9	1.9	-3.8	-1.6	4.2	2.4	4.1
	Min Mxz	SRV 3/ 1	-1381.7	0.0	3.9	0.0	-15.1	0.0	15.1	0.0	15.1
	Min Myz	SRV 1/ 79	-1117.2	0.0	4.9	1.9	-3.8	-1.6	4.2	2.4	4.1

AASHTO Limit State: SRV 1 - SERVICE I													
Max/ Min ID	Load Num	Member Num	Joint Num	Limit State/ Combo ID	Fx (kips)	Fy (kips)	Fz (kips)	Mx (ft*kip)	My (ft*kip)	Mz (ft*kip)	Mxy (ft*kip)	Mxz (ft*kip)	Myz (ft*kip)
Max Fx	3	705	703	SRV 1/ 238	2564.4	-0.5	1.4	9.3	313.2	-9.6	313.3	13.3	313.3
Max Fy	1	702	701	SRV 1/ 10	87.0	16.2	-96.9	0.1	642.7	300.3	642.7	300.3	709.4
Max Fz	2	702	702	SRV 1/ 37	-76.7	0.2	100.3	-0.1	645.9	0.1	645.9	0.1	645.9
Max Mx	3	705	703	SRV 1/ 5	1868.6	-4.8	2.2	57.1	243.8	-80.2	250.4	98.4	256.7
Max My	1	702	701	SRV 1/ 37	87.0	-0.3	-100.0	0.1	663.0	-3.6	663.0	3.6	663.0
Max Mz	1	702	701	SRV 1/ 10	87.0	16.2	-96.9	0.1	642.7	300.3	642.7	300.3	709.4
Max Mxy	1	702	701	SRV 1/ 37	87.0	-0.3	-100.0	0.1	663.0	-3.6	663.0	3.6	663.0
Max Mxz	1	702	701	SRV 1/ 10	87.0	16.2	-96.9	0.1	642.7	300.3	642.7	300.3	709.4
Max Myz	1	702	701	SRV 1/ 10	87.0	16.2	-96.9	0.1	642.7	300.3	642.7	300.3	709.4
Min Fx	4	705	704	SRV 1/ 238	-2554.4	0.3	19.3	-9.3	-51.4	-2.6	52.2	9.6	51.4
Min Fy	2	702	702	SRV 1/ 10	-76.7	-16.5	96.9	-0.1	626.0	-89.8	626.0	89.8	632.4
Min Fz	1	702	701	SRV 1/ 37	87.0	-0.3	-100.0	0.1	663.0	-3.6	663.0	3.6	663.0
Min Mx	4	705	704	SRV 1/ 5	-1859.1	3.9	18.7	-57.1	-3.0	-46.7	57.2	73.7	46.7
Min My	4	705	704	SRV 1/ 240	-2251.1	0.3	14.8	-9.3	-94.3	-2.6	94.7	9.6	94.3
Min Mz	13	720	713	SRV 1/ 20	237.2	-9.7	-25.4	20.6	188.6	-109.8	189.7	111.7	218.3
Min Mxy	20	729	720	SRV 1/ 319	1201.3	-0.2	-0.5	-1.2	0.0	1.8	1.2	2.1	1.8
Min Mxz	2	702	702	SRV 1/ 37	-76.7	0.2	100.3	-0.1	645.9	0.1	645.9	0.1	645.9
Min Myz	20	729	720	SRV 1/ 319	1201.3	-0.2	-0.5	-1.2	0.0	1.8	1.2	2.1	1.8

AASHTO Limit State: SRV 1 - SERVICE I

	Max/ Min ID	Combo ID	Fx (kips)	Fy (kips)	Fz (kips)	Mx (ft*kip)	My (ft*kip)	Mz (ft*kip)	Mxy (ft*kip)	Mxz (ft*kip)	Myz (ft*kip)
	Max Fx	SRV 1/ 1	87.0	7.8	-96.3	0.1	638.7	144.4	638.7	144.4	654.8
	Max Fy	SRV 1/ 10	87.0	16.2	-96.9	0.1	642.7	300.3	642.7	300.3	709.4
	Max Fz	SRV 1/ 316	82.1	-0.3	-67.8	0.1	362.8	-3.6	362.8	3.6	362.8
	Max Mx	SRV 1/ 1	87.0	7.8	-96.3	0.1	638.7	144.4	638.7	144.4	654.8
	Max My	SRV 1/ 37	87.0	-0.3	-100.0	0.1	663.0	-3.6	663.0	3.6	663.0
Load No.	Max Mz	SRV 1/ 10	87.0	16.2	-96.9	0.1	642.7	300.3	642.7	300.3	709.4
1	Max Mxy	SRV 1/ 37	87.0	-0.3	-100.0	0.1	663.0	-3.6	663.0	3.6	663.0
	Max Mxz	SRV 1/ 10	87.0	16.2	-96.9	0.1	642.7	300.3	642.7	300.3	709.4
Member	Max Myz	SRV 1/ 10	87.0	16.2	-96.9	0.1	642.7	300.3	642.7	300.3	709.4
702	Min Fx	SRV 1/ 244	82.1	7.8	-71.5	0.1	387.1	144.4	387.1	144.4	413.2
	Min Fy	SRV 1/ 28	87.0	-1.0	-96.1	0.1	636.9	-21.2	636.9	21.2	637.3
Joint	Min Fz	SRV 1/ 37	87.0	-0.3	-100.0	0.1	663.0	-3.6	663.0	3.6	663.0
701	Min Mx	SRV 1/ 1	87.0	7.8	-96.3	0.1	638.7	144.4	638.7	144.4	654.8
	Min My	SRV 1/ 316	82.1	-0.3	-67.8	0.1	362.8	-3.6	362.8	3.6	362.8
	Min Mz	SRV 1/ 28	87.0	-1.0	-96.1	0.1	636.9	-21.2	636.9	21.2	637.3
	Min Mxy	SRV 1/ 316	82.1	-0.3	-67.8	0.1	362.8	-3.6	362.8	3.6	362.8
	Min Mxz	SRV 1/ 37	87.0	-0.3	-100.0	0.1	663.0	-3.6	663.0	3.6	663.0
	Min Myz	SRV 1/ 316	82.1	-0.3	-67.8	0.1	362.8	-3.6	362.8	3.6	362.8
	Max Fx	SRV 1/ 244	-71.8	-8.2	71.5	-0.1	549.5	-43.7	549.5	43.7	551.2
	Max Fy	SRV 1/ 28	-76.7	0.7	96.3	-0.1	622.9	10.6	622.9	10.6	623.0
	Max Fz	SRV 1/ 37	-76.7	0.2	100.3	-0.1	645.9	0.1	645.9	0.1	645.9
	Max Mx	SRV 1/ 1	-76.7	-8.2	96.3	-0.1	622.7	-43.7	622.7	43.7	624.2
	Max My	SRV 1/ 37	-76.7	0.2	100.3	-0.1	645.9	0.1	645.9	0.1	645.9
Load No.	Max Mz	SRV 1/ 28	-76.7	0.7	96.3	-0.1	622.9	10.6	622.9	10.6	623.0
2	Max Mxy	SRV 1/ 37	-76.7	0.2	100.3	-0.1	645.9	0.1	645.9	0.1	645.9
	Max Mxz	SRV 1/ 10	-76.7	-16.5	96.9	-0.1	626.0	-89.8	626.0	89.8	632.4
Member	Max Myz	SRV 1/ 37	-76.7	0.2	100.3	-0.1	645.9	0.1	645.9	0.1	645.9
702	Min Fx	SRV 1/ 1	-76.7	-8.2	96.3	-0.1	622.7	-43.7	622.7	43.7	624.2
	Min Fy	SRV 1/ 10	-76.7	-16.5	96.9	-0.1	626.0	-89.8	626.0	89.8	632.4
Joint	Min Fz	SRV 1/ 316	-71.8	0.2	67.5	-0.1	526.3	0.1	526.3	0.1	526.3
702	Min Mx	SRV 1/ 1	-76.7	-8.2	96.3	-0.1	622.7	-43.7	622.7	43.7	624.2
	Min My	SRV 1/ 316	-71.8	0.2	67.5	-0.1	526.3	0.1	526.3	0.1	526.3
	Min Mz	SRV 1/ 10	-76.7	-16.5	96.9	-0.1	626.0	-89.8	626.0	89.8	632.4
	Min Mxy	SRV 1/ 316	-71.8	0.2	67.5	-0.1	526.3	0.1	526.3	0.1	526.3
	Min Mxz	SRV 1/ 37	-76.7	0.2	100.3	-0.1	645.9	0.1	645.9	0.1	645.9
	Min Myz	SRV 1/ 316	-71.8	0.2	67.5	-0.1	526.3	0.1	526.3	0.1	526.3

AASHTO Limit State: SRV 1 - SERVICE I

	Max/ Min ID	Combo ID	Fx (kips)	Fy (kips)	Fz (kips)	Mx (ft*kip)	My (ft*kip)	Mz (ft*kip)	Mxy (ft*kip)	Mxz (ft*kip)	Myz (ft*kip)
	Max Fx	SRV 1/ 238	2564.4	-0.5	1.4	9.3	313.2	-9.6	313.3	13.3	313.3
	Max Fy	SRV 1/ 44	1653.1	-0.4	3.0	7.3	203.2	-7.3	203.3	10.3	203.4
	Max Fz	SRV 1/ 138	2078.1	-1.3	6.2	18.5	207.3	-20.5	208.2	27.7	208.3
	Max Mx	SRV 1/ 5	1868.6	-4.8	2.2	57.1	243.8	-80.2	250.4	98.4	256.7
	Max My	SRV 1/ 445	2322.5	-0.5	1.0	9.3	316.4	-9.6	316.6	13.3	316.6
Load No.	Max Mz	SRV 1/ 80	1680.5	-0.4	3.2	7.3	202.4	-7.3	202.5	10.3	202.5
3	Max Mxy	SRV 1/ 427	2328.2	-1.3	1.0	18.5	316.3	-20.5	316.8	27.7	316.9
	Max Mxz	SRV 1/ 5	1868.6	-4.8	2.2	57.1	243.8	-80.2	250.4	98.4	256.7
Member	Max Myz	SRV 1/ 409	2336.1	-1.6	1.1	22.5	316.0	-25.1	316.8	33.7	317.0
705	Min Fx	SRV 1/ 286	1412.8	-0.5	2.9	9.3	203.1	-9.6	203.3	13.3	203.3
	Min Fy	SRV 1/ 5	1868.6	-4.8	2.2	57.1	243.8	-80.2	250.4	98.4	256.7
Joint	Min Fz	SRV 1/ 265	1822.4	-1.3	0.9	18.5	285.1	-20.5	285.7	27.7	285.8
703	Min Mx	SRV 1/ 44	1653.1	-0.4	3.0	7.3	203.2	-7.3	203.3	10.3	203.4
	Min My	SRV 1/ 75	1749.9	-0.5	5.8	9.3	194.6	-9.6	194.8	13.3	194.8
	Min Mz	SRV 1/ 5	1868.6	-4.8	2.2	57.1	243.8	-80.2	250.4	98.4	256.7
	Min Mxy	SRV 1/ 75	1749.9	-0.5	5.8	9.3	194.6	-9.6	194.8	13.3	194.8
	Min Mxz	SRV 1/ 80	1680.5	-0.4	3.2	7.3	202.4	-7.3	202.5	10.3	202.5
	Min Myz	SRV 1/ 75	1749.9	-0.5	5.8	9.3	194.6	-9.6	194.8	13.3	194.8
	Max Fx	SRV 1/ 286	-1403.8	0.3	18.2	-9.3	20.1	-2.6	22.1	9.6	20.2
	Max Fy	SRV 1/ 5	-1859.1	3.9	18.7	-57.1	-3.0	-46.7	57.2	73.7	46.7
	Max Fz	SRV 1/ 283	-1807.7	0.3	20.2	-9.3	-4.4	-2.6	10.3	9.6	5.1
	Max Mx	SRV 1/ 44	-1644.1	0.2	18.1	-7.3	14.1	-1.7	15.8	7.4	14.2
	Max My	SRV 1/ 286	-1403.8	0.3	18.2	-9.3	20.1	-2.6	22.1	9.6	20.2
Load No.	Max Mz	SRV 1/ 44	-1644.1	0.2	18.1	-7.3	14.1	-1.7	15.8	7.4	14.2
4	Max Mxy	SRV 1/ 240	-2251.1	0.3	14.8	-9.3	-94.3	-2.6	94.7	9.6	94.3
	Max Mxz	SRV 1/ 5	-1859.1	3.9	18.7	-57.1	-3.0	-46.7	57.2	73.7	46.7
Member	Max Myz	SRV 1/ 240	-2251.1	0.3	14.8	-9.3	-94.3	-2.6	94.7	9.6	94.3
705	Min Fx	SRV 1/ 238	-2554.4	0.3	19.3	-9.3	-51.4	-2.6	52.2	9.6	51.4
	Min Fy	SRV 1/ 44	-1644.1	0.2	18.1	-7.3	14.1	-1.7	15.8	7.4	14.2
Joint	Min Fz	SRV 1/ 156	-2073.9	0.3	14.5	-9.3	-84.3	-2.6	84.8	9.6	84.3
704	Min Mx	SRV 1/ 5	-1859.1	3.9	18.7	-57.1	-3.0	-46.7	57.2	73.7	46.7
	Min My	SRV 1/ 240	-2251.1	0.3	14.8	-9.3	-94.3	-2.6	94.7	9.6	94.3
	Min Mz	SRV 1/ 5	-1859.1	3.9	18.7	-57.1	-3.0	-46.7	57.2	73.7	46.7
	Min Mxy	SRV 1/ 368	-1763.6	0.2	17.9	-7.3	-4.2	-1.7	8.4	7.4	4.5
	Min Mxz	SRV 1/ 44	-1644.1	0.2	18.1	-7.3	14.1	-1.7	15.8	7.4	14.2
	Min Myz	SRV 1/ 280	-1756.1	0.3	20.1	-9.3	-1.8	-2.6	9.4	9.6	3.1

AASHTO Limit State: SRV 1 - SERVICE I

	Max/ Min ID	Combo ID	Fx (kips)	Fy (kips)	Fz (kips)	Mx (ft*kip)	My (ft*kip)	Mz (ft*kip)	Mxy (ft*kip)	Mxz (ft*kip)	Myz (ft*kip)
	Max Fx	SRV 1/ 286	-468.0	-1.3	-8.2	2.6	60.4	-15.4	60.5	15.6	62.4
	Max Fy	SRV 1/ 44	-478.5	-0.8	-14.2	2.0	94.6	-10.5	94.7	10.7	95.2
	Max Fz	SRV 1/ 282	-485.6	-1.3	-4.9	2.6	57.2	-15.3	57.3	15.5	59.2
	Max Mx	SRV 1/ 5	-560.4	-7.6	-16.3	9.1	112.9	-54.5	113.3	55.3	125.4
	Max My	SRV 1/ 238	-725.4	-1.3	-26.3	2.6	186.6	-15.2	186.6	15.4	187.2
Load No.	Max Mz	SRV 1/ 44	-478.5	-0.8	-14.2	2.0	94.6	-10.5	94.7	10.7	95.2
5	Max Mxy	SRV 1/ 238	-725.4	-1.3	-26.3	2.6	186.6	-15.2	186.6	15.4	187.2
	Max Mxz	SRV 1/ 5	-560.4	-7.6	-16.3	9.1	112.9	-54.5	113.3	55.3	125.4
Member	Max Myz	SRV 1/ 166	-720.8	-3.6	-26.1	6.2	185.0	-37.8	185.1	38.3	188.8
708	Min Fx	SRV 1/ 238	-725.4	-1.3	-26.3	2.6	186.6	-15.2	186.6	15.4	187.2
	Min Fy	SRV 1/ 5	-560.4	-7.6	-16.3	9.1	112.9	-54.5	113.3	55.3	125.4
Joint	Min Fz	SRV 1/ 238	-725.4	-1.3	-26.3	2.6	186.6	-15.2	186.6	15.4	187.2
705	Min Mx	SRV 1/ 44	-478.5	-0.8	-14.2	2.0	94.6	-10.5	94.7	10.7	95.2
	Min My	SRV 1/ 282	-485.6	-1.3	-4.9	2.6	57.2	-15.3	57.3	15.5	59.2
	Min Mz	SRV 1/ 5	-560.4	-7.6	-16.3	9.1	112.9	-54.5	113.3	55.3	125.4
	Min Mxy	SRV 1/ 282	-485.6	-1.3	-4.9	2.6	57.2	-15.3	57.3	15.5	59.2
	Min Mxz	SRV 1/ 44	-478.5	-0.8	-14.2	2.0	94.6	-10.5	94.7	10.7	95.2
	Min Myz	SRV 1/ 282	-485.6	-1.3	-4.9	2.6	57.2	-15.3	57.3	15.5	59.2
	Max Fx	SRV 1/ 238	731.0	1.2	27.8	-2.6	109.7	1.8	109.7	3.2	109.7
	Max Fy	SRV 1/ 5	565.9	7.2	18.0	-9.1	75.0	-27.0	75.6	28.5	79.7
	Max Fz	SRV 1/ 184	723.6	2.6	27.8	-5.0	111.2	0.9	111.3	5.1	111.2
	Max Mx	SRV 1/ 44	484.0	0.7	16.0	-2.0	71.2	2.5	71.3	3.2	71.3
	Max My	SRV 1/ 202	721.7	1.2	27.8	-2.6	111.5	1.8	111.6	3.2	111.5
Load No.	Max Mz	SRV 1/ 44	484.0	0.7	16.0	-2.0	71.2	2.5	71.3	3.2	71.3
6	Max Mxy	SRV 1/ 202	721.7	1.2	27.8	-2.6	111.5	1.8	111.6	3.2	111.5
	Max Mxz	SRV 1/ 5	565.9	7.2	18.0	-9.1	75.0	-27.0	75.6	28.5	79.7
Member	Max Myz	SRV 1/ 203	652.0	5.2	26.4	-5.5	108.8	-25.8	109.0	26.4	111.8
708	Min Fx	SRV 1/ 286	473.5	1.2	10.0	-2.6	40.1	1.8	40.2	3.2	40.2
	Min Fy	SRV 1/ 44	484.0	0.7	16.0	-2.0	71.2	2.5	71.3	3.2	71.3
Joint	Min Fz	SRV 1/ 300	498.4	2.6	6.7	-5.0	5.2	0.9	7.2	5.1	5.2
706	Min Mx	SRV 1/ 5	565.9	7.2	18.0	-9.1	75.0	-27.0	75.6	28.5	79.7
	Min My	SRV 1/ 318	500.4	1.2	6.7	-2.6	4.9	1.8	5.5	3.2	5.2
	Min Mz	SRV 1/ 5	565.9	7.2	18.0	-9.1	75.0	-27.0	75.6	28.5	79.7
	Min Mxy	SRV 1/ 318	500.4	1.2	6.7	-2.6	4.9	1.8	5.5	3.2	5.2
	Min Mxz	SRV 1/ 37	615.9	1.2	18.4	-2.6	74.9	1.8	75.0	3.2	75.0
	Min Myz	SRV 1/ 318	500.4	1.2	6.7	-2.6	4.9	1.8	5.5	3.2	5.2

AASHTO Limit State: SRV 1 - SERVICE I

	Max/ Min ID	Combo ID	Fx (kips)	Fy (kips)	Fz (kips)	Mx (ft*kip)	My (ft*kip)	Mz (ft*kip)	Mxy (ft*kip)	Mxz (ft*kip)	Myz (ft*kip)
	Max Fx	SRV 1/ 238	791.7	-0.3	2.7	2.6	79.4	-3.2	79.4	4.1	79.5
	Max Fy	SRV 1/ 44	452.4	-0.2	3.7	2.0	56.0	-2.2	56.0	3.0	56.1
	Max Fz	SRV 1/ 286	401.5	-0.3	4.0	2.6	47.4	-3.2	47.5	4.1	47.5
	Max Mx	SRV 1/ 1	539.8	-0.8	3.4	5.6	64.6	-8.2	64.8	9.9	65.1
	Max My	SRV 1/ 238	791.7	-0.3	2.7	2.6	79.4	-3.2	79.4	4.1	79.5
Load No.	Max Mz	SRV 1/ 44	452.4	-0.2	3.7	2.0	56.0	-2.2	56.0	3.0	56.1
7	Max Mxy	SRV 1/ 238	791.7	-0.3	2.7	2.6	79.4	-3.2	79.4	4.1	79.5
	Max Mxz	SRV 1/ 1	539.8	-0.8	3.4	5.6	64.6	-8.2	64.8	9.9	65.1
Member	Max Myz	SRV 1/ 229	790.0	-0.5	2.7	3.7	79.3	-5.1	79.4	6.3	79.5
711	Min Fx	SRV 1/ 286	401.5	-0.3	4.0	2.6	47.4	-3.2	47.5	4.1	47.5
	Min Fy	SRV 1/ 5	525.5	-1.4	3.5	0.0	61.4	-9.1	61.4	9.1	62.1
Joint	Min Fz	SRV 1/ 238	791.7	-0.3	2.7	2.6	79.4	-3.2	79.4	4.1	79.5
707	Min Mx	SRV 1/ 38	499.1	-0.8	3.6	-3.7	60.4	-3.0	60.5	4.7	60.5
	Min My	SRV 1/ 286	401.5	-0.3	4.0	2.6	47.4	-3.2	47.5	4.1	47.5
	Min Mz	SRV 1/ 5	525.5	-1.4	3.5	0.0	61.4	-9.1	61.4	9.1	62.1
	Min Mxy	SRV 1/ 286	401.5	-0.3	4.0	2.6	47.4	-3.2	47.5	4.1	47.5
	Min Mxz	SRV 1/ 44	452.4	-0.2	3.7	2.0	56.0	-2.2	56.0	3.0	56.1
	Min Myz	SRV 1/ 286	401.5	-0.3	4.0	2.6	47.4	-3.2	47.5	4.1	47.5
	Max Fx	SRV 1/ 286	-395.6	0.0	8.7	-2.6	15.3	-0.4	15.5	2.6	15.3
	Max Fy	SRV 1/ 41	-509.4	0.6	9.1	3.1	12.9	-15.5	13.2	15.8	20.1
	Max Fz	SRV 1/ 193	-767.0	0.0	9.8	-3.7	12.1	-0.8	12.7	3.8	12.1
	Max Mx	SRV 1/ 38	-493.2	0.5	9.1	3.7	13.0	-15.0	13.5	15.4	19.8
	Max My	SRV 1/ 282	-429.0	0.0	8.9	-2.6	18.9	-0.4	19.1	2.6	18.9
Load No.	Max Mz	SRV 1/ 44	-446.5	-0.1	9.0	-2.0	13.6	0.0	13.7	2.0	13.6
8	Max Mxy	SRV 1/ 273	-430.6	0.0	8.9	-3.7	18.7	-0.8	19.1	3.8	18.7
	Max Mxz	SRV 1/ 5	-519.2	0.6	9.0	0.0	11.9	-16.7	11.9	16.7	20.5
Member	Max Myz	SRV 1/ 266	-478.8	0.6	8.8	1.1	14.1	-16.3	14.1	16.3	21.5
711	Min Fx	SRV 1/ 238	-785.0	0.0	9.6	-2.6	10.3	-0.4	10.6	2.6	10.3
	Min Fy	SRV 1/ 8	-456.3	-0.1	8.9	-5.0	12.6	-1.2	13.5	5.1	12.7
Joint	Min Fz	SRV 1/ 313	-413.5	0.0	8.5	-3.7	13.5	-0.8	14.0	3.8	13.5
708	Min Mx	SRV 1/ 1	-533.5	0.0	9.1	-5.6	11.5	-1.6	12.8	5.8	11.6
	Min My	SRV 1/ 76	-575.7	0.0	9.1	-2.6	10.3	-0.4	10.6	2.6	10.3
	Min Mz	SRV 1/ 5	-519.2	0.6	9.0	0.0	11.9	-16.7	11.9	16.7	20.5
	Min Mxy	SRV 1/ 76	-575.7	0.0	9.1	-2.6	10.3	-0.4	10.6	2.6	10.3
	Min Mxz	SRV 1/ 44	-446.5	-0.1	9.0	-2.0	13.6	0.0	13.7	2.0	13.6
	Min Myz	SRV 1/ 76	-575.7	0.0	9.1	-2.6	10.3	-0.4	10.6	2.6	10.3

AASHTO Limit State: SRV 1 - SERVICE I

	Max/ Min ID	Combo ID	Fx (kips)	Fy (kips)	Fz (kips)	Mx (ft*kip)	My (ft*kip)	Mz (ft*kip)	Mxy (ft*kip)	Mxz (ft*kip)	Myz (ft*kip)
	Max Fx	SRV 1/ 43	-93.4	-0.3	12.3	0.6	-88.7	-6.8	88.7	6.8	89.0
	Max Fy	SRV 1/ 38	-127.3	6.7	11.5	4.7	-84.2	81.1	84.3	81.2	116.9
	Max Fz	SRV 1/ 43	-93.4	-0.3	12.3	0.6	-88.7	-6.8	88.7	6.8	89.0
	Max Mx	SRV 1/ 5	-135.9	5.8	10.7	5.9	-79.6	69.6	79.8	69.9	105.8
	Max My	SRV 1/ 481	-203.1	-0.3	5.4	0.6	-49.5	-6.8	49.5	6.8	50.0
Load No.	Max Mz	SRV 1/ 38	-127.3	6.7	11.5	4.7	-84.2	81.1	84.3	81.2	116.9
9	Max Mxy	SRV 1/ 43	-93.4	-0.3	12.3	0.6	-88.7	-6.8	88.7	6.8	89.0
	Max Mxz	SRV 1/ 38	-127.3	6.7	11.5	4.7	-84.2	81.1	84.3	81.2	116.9
Member	Max Myz	SRV 1/ 38	-127.3	6.7	11.5	4.7	-84.2	81.1	84.3	81.2	116.9
714	Min Fx	SRV 1/ 400	-207.4	-0.3	6.4	0.6	-54.7	-6.8	54.7	6.8	55.1
	Min Fy	SRV 1/ 1	-156.1	-0.8	11.3	1.7	-83.4	-14.4	83.4	14.5	84.6
Joint	Min Fz	SRV 1/ 481	-203.1	-0.3	5.4	0.6	-49.5	-6.8	49.5	6.8	50.0
709	Min Mx	SRV 1/ 44	-97.9	0.1	11.8	0.4	-85.9	-2.9	85.9	2.9	85.9
	Min My	SRV 1/ 43	-93.4	-0.3	12.3	0.6	-88.7	-6.8	88.7	6.8	89.0
	Min Mz	SRV 1/ 1	-156.1	-0.8	11.3	1.7	-83.4	-14.4	83.4	14.5	84.6
	Min Mxy	SRV 1/ 481	-203.1	-0.3	5.4	0.6	-49.5	-6.8	49.5	6.8	50.0
	Min Mxz	SRV 1/ 44	-97.9	0.1	11.8	0.4	-85.9	-2.9	85.9	2.9	85.9
	Min Myz	SRV 1/ 481	-203.1	-0.3	5.4	0.6	-49.5	-6.8	49.5	6.8	50.0
	Max Fx	SRV 1/ 400	213.6	0.2	-6.5	-0.6	-22.3	4.0	22.3	4.0	22.7
	Max Fy	SRV 1/ 1	162.3	0.5	-11.2	-1.7	-49.8	6.8	49.8	7.0	50.3
	Max Fz	SRV 1/ 481	209.3	0.2	-5.5	-0.6	-15.3	4.0	15.3	4.0	15.8
	Max Mx	SRV 1/ 44	104.1	-0.2	-11.5	-0.4	-52.8	4.6	52.8	4.6	53.0
	Max My	SRV 1/ 483	149.2	0.2	-5.5	-0.6	-13.5	4.0	13.5	4.0	14.1
Load No.	Max Mz	SRV 1/ 8	108.1	0.0	-11.4	-1.5	-52.3	7.4	52.3	7.6	52.8
10	Max Mxy	SRV 1/ 43	99.6	0.2	-12.0	-0.6	-55.3	4.0	55.3	4.0	55.5
	Max Mxz	SRV 1/ 8	108.1	0.0	-11.4	-1.5	-52.3	7.4	52.3	7.6	52.8
Member	Max Myz	SRV 1/ 34	100.3	0.2	-12.0	-1.0	-55.2	5.2	55.2	5.3	55.5
714	Min Fx	SRV 1/ 43	99.6	0.2	-12.0	-0.6	-55.3	4.0	55.3	4.0	55.5
	Min Fy	SRV 1/ 38	133.5	-6.8	-11.2	-4.7	-50.3	-1.3	50.5	4.9	50.3
Joint	Min Fz	SRV 1/ 43	99.6	0.2	-12.0	-0.6	-55.3	4.0	55.3	4.0	55.5
710	Min Mx	SRV 1/ 5	142.1	-6.2	-10.6	-5.9	-47.3	0.9	47.7	5.9	47.3
	Min My	SRV 1/ 43	99.6	0.2	-12.0	-0.6	-55.3	4.0	55.3	4.0	55.5
	Min Mz	SRV 1/ 41	138.1	-6.4	-10.7	-4.8	-47.8	-1.9	48.1	5.2	47.8
	Min Mxy	SRV 1/ 483	149.2	0.2	-5.5	-0.6	-13.5	4.0	13.5	4.0	14.1
	Min Mxz	SRV 1/ 37	158.3	0.2	-11.3	-0.6	-50.3	4.0	50.3	4.0	50.5
	Min Myz	SRV 1/ 483	149.2	0.2	-5.5	-0.6	-13.5	4.0	13.5	4.0	14.1

AASHTO Limit State: SRV 1 - SERVICE I

	Max/ Min ID	Combo ID	Fx (kips)	Fy (kips)	Fz (kips)	Mx (ft*kip)	My (ft*kip)	Mz (ft*kip)	Mxy (ft*kip)	Mxz (ft*kip)	Myz (ft*kip)
	Max Fx	SRV 1/ 405	-216.6	-0.2	2.4	1.3	49.7	-1.5	49.7	2.0	49.7
	Max Fy	SRV 1/ 38	-351.9	0.6	2.7	-17.7	48.2	25.3	51.3	30.9	54.4
	Max Fz	SRV 1/ 30	-320.1	-0.3	2.9	1.6	44.5	-1.9	44.6	2.5	44.6
	Max Mx	SRV 1/ 1	-380.0	-0.5	2.5	2.2	51.8	-2.9	51.8	3.6	51.9
	Max My	SRV 1/ 238	-325.3	-0.2	2.1	1.3	59.4	-1.5	59.4	2.0	59.4
Load No.	Max Mz	SRV 1/ 38	-351.9	0.6	2.7	-17.7	48.2	25.3	51.3	30.9	54.4
11	Max Mxy	SRV 1/ 238	-325.3	-0.2	2.1	1.3	59.4	-1.5	59.4	2.0	59.4
	Max Mxz	SRV 1/ 38	-351.9	0.6	2.7	-17.7	48.2	25.3	51.3	30.9	54.4
Member	Max Myz	SRV 1/ 239	-298.6	0.5	2.3	-17.3	55.7	24.4	58.3	29.9	60.8
717	Min Fx	SRV 1/ 37	-388.1	-0.2	2.6	1.3	51.4	-1.5	51.4	2.0	51.4
	Min Fy	SRV 1/ 1	-380.0	-0.5	2.5	2.2	51.8	-2.9	51.8	3.6	51.9
Joint	Min Fz	SRV 1/ 148	-319.7	-0.3	2.1	1.6	57.7	-1.9	57.7	2.5	57.7
711	Min Mx	SRV 1/ 38	-351.9	0.6	2.7	-17.7	48.2	25.3	51.3	30.9	54.4
	Min My	SRV 1/ 286	-284.6	-0.2	2.8	1.3	43.5	-1.5	43.5	2.0	43.5
	Min Mz	SRV 1/ 1	-380.0	-0.5	2.5	2.2	51.8	-2.9	51.8	3.6	51.9
	Min Mxy	SRV 1/ 286	-284.6	-0.2	2.8	1.3	43.5	-1.5	43.5	2.0	43.5
	Min Mxz	SRV 1/ 44	-325.1	-0.1	2.8	0.9	44.5	-0.6	44.5	1.1	44.5
	Min Myz	SRV 1/ 286	-284.6	-0.2	2.8	1.3	43.5	-1.5	43.5	2.0	43.5
	Max Fx	SRV 1/ 37	394.0	-0.1	8.4	-1.3	19.7	0.0	19.7	1.3	19.7
	Max Fy	SRV 1/ 37	394.0	-0.1	8.4	-1.3	19.7	0.0	19.7	1.3	19.7
	Max Fz	SRV 1/ 112	339.1	-0.1	8.7	-1.6	17.3	-0.2	17.3	1.6	17.3
	Max Mx	SRV 1/ 38	357.8	-0.9	8.3	17.7	20.2	-8.9	26.9	19.8	22.1
	Max My	SRV 1/ 286	290.5	-0.1	8.2	-1.3	21.7	0.0	21.7	1.3	21.7
Load No.	Max Mz	SRV 1/ 44	331.0	-0.2	8.2	-0.9	20.9	0.8	20.9	1.2	20.9
12	Max Mxy	SRV 1/ 281	307.8	-0.9	8.3	17.7	20.7	-8.9	27.2	19.8	22.5
	Max Mxz	SRV 1/ 41	348.3	-0.8	8.3	17.3	20.0	-9.7	26.5	19.9	22.2
Member	Max Myz	SRV 1/ 284	298.3	-0.8	8.3	17.3	20.5	-9.7	26.8	19.9	22.7
717	Min Fx	SRV 1/ 405	223.3	-0.1	8.2	-1.3	17.7	0.0	17.7	1.3	17.7
	Min Fy	SRV 1/ 2	350.1	-1.0	8.2	16.8	19.3	-9.5	25.6	19.3	21.5
Joint	Min Fz	SRV 1/ 66	313.3	-0.1	7.9	-1.6	18.0	-0.2	18.0	1.6	18.0
712	Min Mx	SRV 1/ 1	386.3	-0.2	8.3	-2.2	18.8	-0.6	18.9	2.2	18.8
	Min My	SRV 1/ 238	332.0	-0.1	8.5	-1.3	15.1	0.0	15.2	1.3	15.1
	Min Mz	SRV 1/ 5	340.6	-0.9	8.2	16.4	19.1	-10.3	25.2	19.4	21.7
	Min Mxy	SRV 1/ 238	332.0	-0.1	8.5	-1.3	15.1	0.0	15.2	1.3	15.1
	Min Mxz	SRV 1/ 44	331.0	-0.2	8.2	-0.9	20.9	0.8	20.9	1.2	20.9
	Min Myz	SRV 1/ 238	332.0	-0.1	8.5	-1.3	15.1	0.0	15.2	1.3	15.1

AASHTO Limit State: SRV 1 - SERVICE I

	Max/ Min ID	Combo ID	Fx (kips)	Fy (kips)	Fz (kips)	Mx (ft*kip)	My (ft*kip)	Mz (ft*kip)	Mxy (ft*kip)	Mxz (ft*kip)	Myz (ft*kip)
	Max Fx	SRV 1/ 201	304.0	0.0	-24.7	-0.3	185.5	2.6	185.5	2.6	185.5
	Max Fy	SRV 1/ 37	242.4	0.0	-27.0	-0.3	199.9	2.6	199.9	2.6	199.9
	Max Fz	SRV 1/ 324	195.1	0.0	-22.8	-0.3	170.6	2.6	170.6	2.6	170.6
	Max Mx	SRV 1/ 2	235.2	-9.6	-25.3	20.6	188.4	-108.6	189.5	110.5	217.4
	Max My	SRV 1/ 199	301.8	0.0	-27.5	-0.3	205.5	2.6	205.5	2.6	205.5
Load No.	Max Mz	SRV 1/ 1	238.9	-0.1	-26.9	0.2	199.5	3.2	199.5	3.2	199.5
13	Max Mxy	SRV 1/ 199	301.8	0.0	-27.5	-0.3	205.5	2.6	205.5	2.6	205.5
	Max Mxz	SRV 1/ 20	237.2	-9.7	-25.4	20.6	188.6	-109.8	189.7	111.7	218.3
Member	Max Myz	SRV 1/ 182	296.6	-9.7	-25.9	20.6	194.2	-109.8	195.3	111.7	223.1
720	Min Fx	SRV 1/ 324	195.1	0.0	-22.8	-0.3	170.6	2.6	170.6	2.6	170.6
	Min Fy	SRV 1/ 11	236.1	-9.7	-25.3	20.6	188.5	-109.4	189.6	111.3	217.9
Joint	Min Fz	SRV 1/ 199	301.8	0.0	-27.5	-0.3	205.5	2.6	205.5	2.6	205.5
713	Min Mx	SRV 1/ 37	242.4	0.0	-27.0	-0.3	199.9	2.6	199.9	2.6	199.9
	Min My	SRV 1/ 324	195.1	0.0	-22.8	-0.3	170.6	2.6	170.6	2.6	170.6
	Min Mz	SRV 1/ 20	237.2	-9.7	-25.4	20.6	188.6	-109.8	189.7	111.7	218.3
	Min Mxy	SRV 1/ 324	195.1	0.0	-22.8	-0.3	170.6	2.6	170.6	2.6	170.6
	Min Mxz	SRV 1/ 8	233.0	-0.4	-23.8	0.3	177.7	-0.3	177.7	0.4	177.7
	Min Myz	SRV 1/ 324	195.1	0.0	-22.8	-0.3	170.6	2.6	170.6	2.6	170.6
	Max Fx	SRV 1/ 324	-188.7	0.2	25.5	0.3	150.1	-3.7	150.1	3.7	150.1
	Max Fy	SRV 1/ 2	-228.7	10.0	27.8	-20.6	165.2	-22.3	166.5	30.3	166.7
	Max Fz	SRV 1/ 226	-289.0	0.3	30.0	0.0	178.0	-5.2	178.0	5.2	178.1
	Max Mx	SRV 1/ 37	-235.9	0.2	29.3	0.3	175.3	-3.7	175.3	3.7	175.4
	Max My	SRV 1/ 235	-288.4	0.2	30.0	0.3	178.1	-3.7	178.1	3.7	178.1
Load No.	Max Mz	SRV 1/ 37	-235.9	0.2	29.3	0.3	175.3	-3.7	175.3	3.7	175.4
14	Max Mxy	SRV 1/ 235	-288.4	0.2	30.0	0.3	178.1	-3.7	178.1	3.7	178.1
	Max Mxz	SRV 1/ 2	-228.7	10.0	27.8	-20.6	165.2	-22.3	166.5	30.3	166.7
Member	Max Myz	SRV 1/ 235	-288.4	0.2	30.0	0.3	178.1	-3.7	178.1	3.7	178.1
720	Min Fx	SRV 1/ 201	-297.5	0.2	27.0	0.3	159.4	-3.7	159.4	3.7	159.5
	Min Fy	SRV 1/ 37	-235.9	0.2	29.3	0.3	175.3	-3.7	175.3	3.7	175.4
Joint	Min Fz	SRV 1/ 279	-195.0	0.3	25.3	0.0	149.6	-5.2	149.6	5.2	149.7
714	Min Mx	SRV 1/ 2	-228.7	10.0	27.8	-20.6	165.2	-22.3	166.5	30.3	166.7
	Min My	SRV 1/ 369	-225.4	0.2	25.3	0.3	149.3	-3.7	149.3	3.7	149.4
	Min Mz	SRV 1/ 2	-228.7	10.0	27.8	-20.6	165.2	-22.3	166.5	30.3	166.7
	Min Mxy	SRV 1/ 369	-225.4	0.2	25.3	0.3	149.3	-3.7	149.3	3.7	149.4
	Min Mxz	SRV 1/ 37	-235.9	0.2	29.3	0.3	175.3	-3.7	175.3	3.7	175.4
	Min Myz	SRV 1/ 369	-225.4	0.2	25.3	0.3	149.3	-3.7	149.3	3.7	149.4

AASHTO Limit State: SRV 1 - SERVICE I

	Max/ Min ID	Combo ID	Fx (kips)	Fy (kips)	Fz (kips)	Mx (ft*kip)	My (ft*kip)	Mz (ft*kip)	Mxy (ft*kip)	Mxz (ft*kip)	Myz (ft*kip)
	Max Fx	SRV 1/ 324	-785.3	-0.1	-0.6	0.8	46.3	-0.2	46.3	0.8	46.3
	Max Fy	SRV 1/ 38	-932.7	2.8	-0.3	-22.6	45.8	55.8	51.0	60.2	72.1
	Max Fz	SRV 1/ 30	-861.4	-0.1	-0.1	0.8	43.3	0.4	43.3	0.8	43.3
	Max Mx	SRV 1/ 1	-1011.1	-0.2	-0.6	0.8	48.6	0.8	48.6	1.2	48.6
	Max My	SRV 1/ 400	-1006.1	-0.1	-1.5	0.8	57.6	-0.2	57.6	0.8	57.6
Load No.	Max Mz	SRV 1/ 20	-930.0	2.8	-0.4	-22.7	45.8	56.9	51.1	61.3	73.0
15	Max Mxy	SRV 1/ 347	-933.5	2.6	-1.1	-22.5	54.4	55.8	58.9	60.2	77.9
	Max Mxz	SRV 1/ 20	-930.0	2.8	-0.4	-22.7	45.8	56.9	51.1	61.3	73.0
Member	Max Myz	SRV 1/ 344	-935.5	2.8	-1.1	-22.7	54.0	56.9	58.6	61.3	78.4
723	Min Fx	SRV 1/ 199	-1120.9	-0.1	-0.9	0.8	53.1	-0.2	53.1	0.8	53.1
	Min Fy	SRV 1/ 1	-1011.1	-0.2	-0.6	0.8	48.6	0.8	48.6	1.2	48.6
Joint	Min Fz	SRV 1/ 391	-1007.2	-0.1	-1.5	0.8	57.6	0.4	57.6	0.8	57.6
715	Min Mx	SRV 1/ 20	-930.0	2.8	-0.4	-22.7	45.8	56.9	51.1	61.3	73.0
	Min My	SRV 1/ 43	-851.9	-0.1	-0.1	0.8	42.2	-0.2	42.2	0.8	42.2
	Min Mz	SRV 1/ 37	-1017.5	-0.1	-0.5	0.8	48.6	-0.2	48.6	0.8	48.6
	Min Mxy	SRV 1/ 43	-851.9	-0.1	-0.1	0.8	42.2	-0.2	42.2	0.8	42.2
	Min Mxz	SRV 1/ 28	-1016.4	-0.1	-0.5	0.8	48.6	0.4	48.6	0.8	48.6
	Min Myz	SRV 1/ 43	-851.9	-0.1	-0.1	0.8	42.2	-0.2	42.2	0.8	42.2
	Max Fx	SRV 1/ 199	1127.1	-0.1	9.6	-0.8	54.0	0.5	54.0	0.9	54.0
	Max Fy	SRV 1/ 37	1023.7	-0.1	9.2	-0.8	51.2	0.5	51.2	0.9	51.2
	Max Fz	SRV 1/ 364	1025.1	-0.1	10.0	-0.8	56.0	0.5	56.0	0.9	56.0
	Max Mx	SRV 1/ 20	936.2	-3.2	8.9	22.7	49.3	2.9	54.3	22.9	49.4
	Max My	SRV 1/ 442	1077.2	-0.1	9.9	-0.8	56.5	0.5	56.5	0.9	56.5
Load No.	Max Mz	SRV 1/ 11	934.3	-3.2	8.8	22.6	48.9	2.9	53.9	22.8	49.0
16	Max Mxy	SRV 1/ 443	992.4	-3.0	9.7	22.6	55.0	2.6	59.4	22.7	55.1
	Max Mxz	SRV 1/ 20	936.2	-3.2	8.9	22.7	49.3	2.9	54.3	22.9	49.4
Member	Max Myz	SRV 1/ 442	1077.2	-0.1	9.9	-0.8	56.5	0.5	56.5	0.9	56.5
723	Min Fx	SRV 1/ 324	792.0	-0.1	8.8	-0.8	48.8	0.5	48.8	0.9	48.8
	Min Fy	SRV 1/ 2	932.7	-3.3	8.8	22.6	48.7	2.7	53.7	22.7	48.8
Joint	Min Fz	SRV 1/ 75	856.4	-0.1	8.5	-0.8	46.5	0.5	46.5	0.9	46.5
716	Min Mx	SRV 1/ 1	1017.5	-0.4	9.0	-0.8	50.2	0.6	50.2	1.1	50.2
	Min My	SRV 1/ 81	841.9	-0.1	8.5	-0.8	46.3	0.5	46.3	0.9	46.3
	Min Mz	SRV 1/ 37	1023.7	-0.1	9.2	-0.8	51.2	0.5	51.2	0.9	51.2
	Min Mxy	SRV 1/ 81	841.9	-0.1	8.5	-0.8	46.3	0.5	46.3	0.9	46.3
	Min Mxz	SRV 1/ 37	1023.7	-0.1	9.2	-0.8	51.2	0.5	51.2	0.9	51.2
	Min Myz	SRV 1/ 81	841.9	-0.1	8.5	-0.8	46.3	0.5	46.3	0.9	46.3

AASHTO Limit State: SRV 1 - SERVICE I

Load No. / Member / Joint	Max/ Min ID	Combo ID	Fx (kips)	Fy (kips)	Fz (kips)	Mx (ft*kip)	My (ft*kip)	Mz (ft*kip)	Mxy (ft*kip)	Mxz (ft*kip)	Myz (ft*kip)
	Max Fx	SRV 1/ 202	955.1	0.0	-16.5	-0.9	197.2	2.1	197.2	2.3	197.2
	Max Fy	SRV 1/ 1	760.5	0.1	-14.1	-1.0	165.3	3.3	165.3	3.4	165.3
	Max Fz	SRV 1/ 79	665.7	0.0	-11.8	-0.9	141.6	2.1	141.6	2.3	141.6
	Max Mx	SRV 1/ 20	722.7	-4.7	-13.3	20.4	156.0	-55.1	157.3	58.8	165.4
	Max My	SRV 1/ 445	945.8	0.0	-16.5	-0.9	199.6	2.1	199.6	2.3	199.6
Load No.	Max Mz	SRV 1/ 1	760.5	0.1	-14.1	-1.0	165.3	3.3	165.3	3.4	165.3
17	Max Mxy	SRV 1/ 445	945.8	0.0	-16.5	-0.9	199.6	2.1	199.6	2.3	199.6
	Max Mxz	SRV 1/ 38	724.9	-4.7	-13.3	20.3	156.8	-55.5	158.1	59.1	166.3
Member	Max Myz	SRV 1/ 445	945.8	0.0	-16.5	-0.9	199.6	2.1	199.6	2.3	199.6
726	Min Fx	SRV 1/ 322	656.4	0.0	-11.8	-0.9	144.0	2.1	144.0	2.3	144.0
	Min Fy	SRV 1/ 11	721.2	-4.7	-13.2	20.3	155.4	-54.8	156.7	58.4	164.7
Joint	Min Fz	SRV 1/ 199	946.5	0.0	-16.5	-0.9	196.2	2.1	196.2	2.3	196.2
717	Min Mx	SRV 1/ 1	760.5	0.1	-14.1	-1.0	165.3	3.3	165.3	3.4	165.3
	Min My	SRV 1/ 79	665.7	0.0	-11.8	-0.9	141.6	2.1	141.6	2.3	141.6
	Min Mz	SRV 1/ 38	724.9	-4.7	-13.3	20.3	156.8	-55.5	158.1	59.1	166.3
	Min Mxy	SRV 1/ 79	665.7	0.0	-11.8	-0.9	141.6	2.1	141.6	2.3	141.6
	Min Mxz	SRV 1/ 26	677.8	-0.2	-12.2	-0.7	145.1	0.0	145.1	0.7	145.1
	Min Myz	SRV 1/ 79	665.7	0.0	-11.8	-0.9	141.6	2.1	141.6	2.3	141.6
	Max Fx	SRV 1/ 322	-650.2	0.1	17.9	0.9	102.0	-2.7	102.0	2.9	102.0
	Max Fy	SRV 1/ 2	-713.5	5.1	19.0	-20.2	110.9	-27.1	112.7	33.8	114.2
	Max Fz	SRV 1/ 190	-939.1	0.2	22.2	0.8	124.6	-4.1	124.6	4.2	124.6
	Max Mx	SRV 1/ 1	-754.1	0.4	20.0	1.0	118.0	-6.1	118.0	6.1	118.2
	Max My	SRV 1/ 199	-939.9	0.1	22.2	0.9	124.6	-2.8	124.6	2.9	124.7
Load No.	Max Mz	SRV 1/ 73	-749.3	0.1	20.0	0.9	117.7	-2.7	117.7	2.9	117.7
18	Max Mxy	SRV 1/ 199	-939.9	0.1	22.2	0.9	124.6	-2.8	124.6	2.9	124.7
	Max Mxz	SRV 1/ 2	-713.5	5.1	19.0	-20.2	110.9	-27.1	112.7	33.8	114.2
Member	Max Myz	SRV 1/ 199	-939.9	0.1	22.2	0.9	124.6	-2.8	124.6	2.9	124.7
726	Min Fx	SRV 1/ 202	-948.5	0.1	22.2	0.9	124.3	-2.8	124.3	2.9	124.4
	Min Fy	SRV 1/ 37	-758.9	0.1	20.0	0.9	118.3	-2.8	118.3	2.9	118.4
Joint	Min Fz	SRV 1/ 70	-660.3	0.2	17.9	0.8	103.8	-4.1	103.8	4.2	103.9
718	Min Mx	SRV 1/ 20	-716.2	5.1	19.0	-20.4	111.1	-26.1	112.9	33.1	114.1
	Min My	SRV 1/ 324	-657.4	0.1	17.9	0.9	101.7	-2.7	101.7	2.9	101.7
	Min Mz	SRV 1/ 2	-713.5	5.1	19.0	-20.2	110.9	-27.1	112.7	33.8	114.2
	Min Mxy	SRV 1/ 324	-657.4	0.1	17.9	0.9	101.7	-2.7	101.7	2.9	101.7
	Min Mxz	SRV 1/ 73	-749.3	0.1	20.0	0.9	117.7	-2.7	117.7	2.9	117.7
	Min Myz	SRV 1/ 324	-657.4	0.1	17.9	0.9	101.7	-2.7	101.7	2.9	101.7

AASHTO Limit State: SRV 1 - SERVICE I

	Max/ Min ID	Combo ID	Fx (kips)	Fy (kips)	Fz (kips)	Mx (ft*kip)	My (ft*kip)	Mz (ft*kip)	Mxy (ft*kip)	Mxz (ft*kip)	Myz (ft*kip)
	Max Fx	SRV 1/ 322	-977.2	0.0	4.2	1.2	-35.7	-0.2	35.7	1.2	35.7
	Max Fy	SRV 1/ 11	-1101.5	6.5	4.9	-15.8	-42.9	86.3	45.7	87.8	96.4
	Max Fz	SRV 1/ 445	-1347.9	0.0	10.0	1.2	-93.4	-0.2	93.4	1.2	93.4
	Max Mx	SRV 1/ 1	-1201.6	0.1	5.3	1.7	-47.0	2.0	47.0	2.6	47.0
	Max My	SRV 1/ 79	-990.4	0.0	3.9	1.2	-33.8	-0.2	33.8	1.2	33.8
Load No.	Max Mz	SRV 1/ 2	-1101.0	6.4	4.8	-15.7	-42.3	86.5	45.1	87.9	96.3
19	Max Mxy	SRV 1/ 445	-1347.9	0.0	10.0	1.2	-93.4	-0.2	93.4	1.2	93.4
	Max Mxz	SRV 1/ 2	-1101.0	6.4	4.8	-15.7	-42.3	86.5	45.1	87.9	96.3
Member	Max Myz	SRV 1/ 425	-1238.5	6.4	9.2	-16.0	-86.3	86.4	87.8	87.8	122.1
729	Min Fx	SRV 1/ 202	-1361.1	0.0	9.7	1.2	-91.5	-0.2	91.5	1.2	91.5
	Min Fy	SRV 1/ 37	-1203.5	0.0	5.6	1.2	-49.6	-0.2	49.6	1.2	49.6
Joint	Min Fz	SRV 1/ 79	-990.4	0.0	3.9	1.2	-33.8	-0.2	33.8	1.2	33.8
719	Min Mx	SRV 1/ 38	-1102.9	6.3	5.1	-16.2	-44.9	84.3	47.7	85.8	95.5
	Min My	SRV 1/ 445	-1347.9	0.0	10.0	1.2	-93.4	-0.2	93.4	1.2	93.4
	Min Mz	SRV 1/ 37	-1203.5	0.0	5.6	1.2	-49.6	-0.2	49.6	1.2	49.6
	Min Mxy	SRV 1/ 79	-990.4	0.0	3.9	1.2	-33.8	-0.2	33.8	1.2	33.8
	Min Mxz	SRV 1/ 37	-1203.5	0.0	5.6	1.2	-49.6	-0.2	49.6	1.2	49.6
	Min Myz	SRV 1/ 79	-990.4	0.0	3.9	1.2	-33.8	-0.2	33.8	1.2	33.8
	Max Fx	SRV 1/ 202	1367.5	-0.2	-4.3	-1.2	-18.6	1.8	18.7	2.1	18.7
	Max Fy	SRV 1/ 37	1209.9	-0.2	-0.2	-1.2	3.9	1.8	4.0	2.1	4.2
	Max Fz	SRV 1/ 70	997.5	-0.4	1.1	-1.3	10.5	2.5	10.6	2.9	10.8
	Max Mx	SRV 1/ 38	1109.3	-6.5	0.3	16.2	6.3	17.4	17.4	23.8	18.5
	Max My	SRV 1/ 79	997.2	-0.2	1.1	-1.2	10.5	1.8	10.6	2.1	10.7
Load No.	Max Mz	SRV 1/ 2	1107.6	-6.9	0.4	15.7	6.5	19.2	17.0	24.7	20.2
20	Max Mxy	SRV 1/ 446	1249.7	-6.2	-4.0	15.9	-18.5	14.0	24.4	21.2	23.2
	Max Mxz	SRV 1/ 11	1108.0	-6.8	0.4	15.8	6.4	19.1	17.0	24.8	20.2
Member	Max Myz	SRV 1/ 416	1244.4	-6.8	-3.8	15.8	-17.6	19.1	23.6	24.8	26.0
729	Min Fx	SRV 1/ 322	984.0	-0.2	0.8	-1.2	7.6	1.8	7.7	2.1	7.8
	Min Fy	SRV 1/ 2	1107.6	-6.9	0.4	15.7	6.5	19.2	17.0	24.7	20.2
Joint	Min Fz	SRV 1/ 436	1354.0	-0.4	-4.6	-1.3	-21.5	2.5	21.5	2.9	21.6
720	Min Mx	SRV 1/ 1	1208.2	-0.6	-0.1	-1.7	4.1	3.6	4.5	4.0	5.4
	Min My	SRV 1/ 445	1354.3	-0.2	-4.6	-1.2	-21.5	1.8	21.6	2.1	21.6
	Min Mz	SRV 1/ 37	1209.9	-0.2	-0.2	-1.2	3.9	1.8	4.0	2.1	4.2
	Min Mxy	SRV 1/ 319	1201.3	-0.2	-0.5	-1.2	0.0	1.8	1.2	2.1	1.8
	Min Mxz	SRV 1/ 37	1209.9	-0.2	-0.2	-1.2	3.9	1.8	4.0	2.1	4.2
	Min Myz	SRV 1/ 319	1201.3	-0.2	-0.5	-1.2	0.0	1.8	1.2	2.1	1.8

AASHTO Limit State: SRV 1 - SERVICE I

Load No. / Member / Joint	Max/ Min ID	Combo ID	Fx (kips)	Fy (kips)	Fz (kips)	Mx (ft*kip)	My (ft*kip)	Mz (ft*kip)	Mxy (ft*kip)	Mxz (ft*kip)	Myz (ft*kip)
	Max Fx	SRV 1/ 445	1984.5	0.2	9.8	-1.9	-50.3	3.2	50.3	3.7	50.4
	Max Fy	SRV 1/ 2	1241.2	0.7	5.8	-2.8	-6.6	13.0	7.2	13.3	14.6
	Max Fz	SRV 1/ 442	1962.9	0.2	9.8	-1.9	-50.6	3.2	50.6	3.7	50.7
	Max Mx	SRV 1/ 38	1248.6	0.4	6.1	-1.0	-12.3	8.6	12.3	8.7	15.0
	Max My	SRV 1/ 76	1344.7	0.2	5.6	-1.9	-0.6	3.2	2.0	3.7	3.3
Load No.	Max Mz	SRV 1/ 5	1252.0	0.7	5.8	-2.9	-6.4	14.1	7.0	14.4	15.5
21	Max Mxy	SRV 1/ 447	1811.4	0.2	9.7	-1.9	-51.8	3.2	51.8	3.7	51.9
	Max Mxz	SRV 1/ 5	1252.0	0.7	5.8	-2.9	-6.4	14.1	7.0	14.4	15.5
Member	Max Myz	SRV 1/ 447	1811.4	0.2	9.7	-1.9	-51.8	3.2	51.8	3.7	51.9
732	Min Fx	SRV 1/ 79	1123.1	0.2	5.4	-1.9	-1.2	3.2	2.2	3.7	3.5
	Min Fy	SRV 1/ 37	1337.8	0.2	6.2	-1.9	-12.3	3.2	12.4	3.7	12.7
Joint	Min Fz	SRV 1/ 79	1123.1	0.2	5.4	-1.9	-1.2	3.2	2.2	3.7	3.5
721	Min Mx	SRV 1/ 1	1330.4	0.5	5.9	-3.7	-6.6	7.6	7.5	8.5	10.1
	Min My	SRV 1/ 447	1811.4	0.2	9.7	-1.9	-51.8	3.2	51.8	3.7	51.9
	Min Mz	SRV 1/ 44	1148.6	0.2	6.0	-1.9	-12.4	2.2	12.5	2.9	12.6
	Min Mxy	SRV 1/ 77	1244.7	0.4	5.5	-1.1	-0.7	9.7	1.3	9.8	9.8
	Min Mxz	SRV 1/ 44	1148.6	0.2	6.0	-1.9	-12.4	2.2	12.5	2.9	12.6
	Min Myz	SRV 1/ 80	1133.9	0.2	5.4	-1.9	-1.0	2.2	2.1	2.9	2.5
	Max Fx	SRV 1/ 79	-1117.2	0.0	4.9	1.9	-3.8	-1.6	4.2	2.4	4.1
	Max Fy	SRV 1/ 1	-1324.2	0.2	4.2	3.7	-11.2	-3.6	11.8	5.1	11.8
	Max Fz	SRV 1/ 79	-1117.2	0.0	4.9	1.9	-3.8	-1.6	4.2	2.4	4.1
	Max Mx	SRV 1/ 1	-1324.2	0.2	4.2	3.7	-11.2	-3.6	11.8	5.1	11.8
	Max My	SRV 1/ 79	-1117.2	0.0	4.9	1.9	-3.8	-1.6	4.2	2.4	4.1
Load No.	Max Mz	SRV 1/ 44	-1142.0	0.0	3.9	1.9	-10.6	-0.9	10.8	2.0	10.7
22	Max Mxy	SRV 1/ 445	-1977.9	0.0	0.1	1.9	-59.4	-1.6	59.5	2.4	59.5
	Max Mxz	SRV 1/ 5	-1245.8	-0.1	4.3	2.9	-9.8	-6.0	10.2	6.6	11.5
Member	Max Myz	SRV 1/ 445	-1977.9	0.0	0.1	1.9	-59.4	-1.6	59.5	2.4	59.5
732	Min Fx	SRV 1/ 445	-1977.9	0.0	0.1	1.9	-59.4	-1.6	59.5	2.4	59.5
	Min Fy	SRV 1/ 38	-1242.0	-0.2	3.8	1.0	-12.7	-3.3	12.8	3.4	13.2
Joint	Min Fz	SRV 1/ 442	-1956.3	0.0	0.1	1.9	-58.7	-1.6	58.8	2.4	58.8
722	Min Mx	SRV 1/ 38	-1242.0	-0.2	3.8	1.0	-12.7	-3.3	12.8	3.4	13.2
	Min My	SRV 1/ 445	-1977.9	0.0	0.1	1.9	-59.4	-1.6	59.5	2.4	59.5
	Min Mz	SRV 1/ 5	-1245.8	-0.1	4.3	2.9	-9.8	-6.0	10.2	6.6	11.5
	Min Mxy	SRV 1/ 79	-1117.2	0.0	4.9	1.9	-3.8	-1.6	4.2	2.4	4.1
	Min Mxz	SRV 1/ 44	-1142.0	0.0	3.9	1.9	-10.6	-0.9	10.8	2.0	10.7
	Min Myz	SRV 1/ 79	-1117.2	0.0	4.9	1.9	-3.8	-1.6	4.2	2.4	4.1

Limit State: SERVICE I

CR Creep
LF: 1
CR1: CR+SH+PT_D10K
CR2: CR+SH+PT_EOC

TU Uniform Temperature
LF: 1
TU1: TU-
TU2: TU+
TU3: TU+Temp. Diff.

WS Wind Load on Structure
LF: 0.3
WS1: WS_0 DEG_SRVI
WS2: WS_15 DEG_SRVI
WS3: WS_30 DEG_SRVI
WS4: WS_45 DEG_SRVI
WS5: WS_60 DEG_SRVI
WS6: WS_-15 DEG_SRVI
WS7: WS_-30 DEG_SRVI
WS8: WS_-45 DEG_SRVI
WS9: WS_-60 DEG_SRVI

DW DL Wearing Surfaces & Utilities
LF: 1
DW1: DW

LL Vehicular Live Load
LF: 1
LL1: LL1_Deck
LL2: LL1_Deck Offset
LL3: LL1_Roof
LL4: LL2_Deck
LL5: LL2_Deck Offset
LL6: LL2_Roof
LL7: LL3_Deck
LL8: LL3_Deck Offset
LL9: LL3_Roof

DC DL Structural Components & Attachments
LF: 1
DC1: DC

Combo ID	Load Combinations
SRV 1/ 1	1.00*(CR1*1.00 + TU1*1.00 + WS1*0.30 + DW1*1.00 + LL1*1.00 + DC1*1.00)
SRV 1/ 2	1.00*(CR1*1.00 + TU1*1.00 + WS1*0.30 + DW1*1.00 + LL2*1.00 + DC1*1.00)
SRV 1/ 3	1.00*(CR1*1.00 + TU1*1.00 + WS1*0.30 + DW1*1.00 + LL3*1.00 + DC1*1.00)
SRV 1/ 4	1.00*(CR1*1.00 + TU1*1.00 + WS1*0.30 + DW1*1.00 + LL4*1.00 + DC1*1.00)
SRV 1/ 5	1.00*(CR1*1.00 + TU1*1.00 + WS1*0.30 + DW1*1.00 + LL5*1.00 + DC1*1.00)
SRV 1/ 6	1.00*(CR1*1.00 + TU1*1.00 + WS1*0.30 + DW1*1.00 + LL6*1.00 + DC1*1.00)
SRV 1/ 7	1.00*(CR1*1.00 + TU1*1.00 + WS1*0.30 + DW1*1.00 + LL7*1.00 + DC1*1.00)
SRV 1/ 8	1.00*(CR1*1.00 + TU1*1.00 + WS1*0.30 + DW1*1.00 + LL8*1.00 + DC1*1.00)
SRV 1/ 9	1.00*(CR1*1.00 + TU1*1.00 + WS1*0.30 + DW1*1.00 + LL9*1.00 + DC1*1.00)

Limit State: SERVICE I

CR Creep
LF: 1
CR1: CR+SH+PT_D10K
CR2: CR+SH+PT_EOC

TU Uniform Temperature
LF: 1
TU1: TU-
TU2: TU+
TU3: TU+Temp. Diff.

WS Wind Load on Structure
LF: 0.3
WS1: WS_0 DEG_SRVI
WS2: WS_15 DEG_SRVI
WS3: WS_30 DEG_SRVI
WS4: WS_45 DEG_SRVI
WS5: WS_60 DEG_SRVI
WS6: WS_-15 DEG_SRVI
WS7: WS_-30 DEG_SRVI
WS8: WS_-45 DEG_SRVI
WS9: WS_-60 DEG_SRVI

DW DL Wearing Surfaces & Utilities
LF: 1
DW1: DW

LL Vehicular Live Load
LF: 1
LL1: LL1_Deck
LL2: LL1_Deck Offset
LL3: LL1_Roof
LL4: LL2_Deck
LL5: LL2_Deck Offset
LL6: LL2_Roof
LL7: LL3_Deck
LL8: LL3_Deck Offset
LL9: LL3_Roof

DC DL Structural Components & Attachments
LF: 1
DC1: DC

Load (Row) Number	User's Load ID	Member ID	Joint ID	Fx (kips)	Fy (kips)	Fz (kips)	Mx (ft*kip)	My (ft*kip)	Mz (ft*kip)
1	CR+SH+PT_D10K	702	701	25.1	0	-97.7	0	635.3	0.1
2	CR+SH+PT_D10K	702	702	-25.1	0	97.7	0	644.5	0
3	CR+SH+PT_D10K	705	703	-71.3	0	3.1	0	-105.8	0
4	CR+SH+PT_D10K	705	704	71.3	0	-3.1	0	15	0
5	CR+SH+PT_D10K	708	705	120.2	0	8.8	0	-75.4	0
6	CR+SH+PT_D10K	708	706	-120.2	0	-8.8	0	-21	0
7	CR+SH+PT_D10K	711	707	-194.6	0	-0.2	0	21.9	0
8	CR+SH+PT_D10K	711	708	194.6	0	0.2	0	-17.8	0
9	CR+SH+PT_D10K	714	709	142.4	0	25.7	0	-156.5	0
10	CR+SH+PT_D10K	714	710	-142.4	0	-25.7	0	-147.4	0
11	CR+SH+PT_D10K	717	711	-298.2	0	-0.8	0	14.5	0
12	CR+SH+PT_D10K	717	712	298.2	0	0.8	0	5.4	0
13	CR+SH+PT_D10K	720	713	158.5	0	-16.3	0	112	0
14	CR+SH+PT_D10K	720	714	-158.5	0	16.3	0	105.8	0
15	CR+SH+PT_D10K	723	715	-235.9	0	-1.5	0	14.5	0
16	CR+SH+PT_D10K	723	716	235.9	0	1.5	0	16	0
17	CR+SH+PT_D10K	726	717	117.5	0	-5.7	0	40	0
18	CR+SH+PT_D10K	726	718	-117.5	0	5.7	0	54.4	0
19	CR+SH+PT_D10K	729	719	-121.8	0	-7.1	0	51.7	0
20	CR+SH+PT_D10K	729	720	121.8	0	7.1	0	61.2	0
21	CR+SH+PT_D10K	732	721	-58.6	0	-3.2	0	45.2	0
22	CR+SH+PT_D10K	732	722	58.6	0	3.2	0	27.6	0
1	CR+SH+PT_EOC	702	701	20.2	0	-72.9	0	383.7	0.1
2	CR+SH+PT_EOC	702	702	-20.2	0	72.9	0	571.3	0
3	CR+SH+PT_EOC	705	703	-285.8	0	2.9	0	-103.4	0
4	CR+SH+PT_EOC	705	704	285.8	0	-2.9	0	19.7	0
5	CR+SH+PT_EOC	708	705	123.1	0	14.3	0	-106.1	0
6	CR+SH+PT_EOC	708	706	-123.1	0	-14.3	0	-50.2	0
7	CR+SH+PT_EOC	711	707	-229.3	0	0.1	0	13.8	0
8	CR+SH+PT_EOC	711	708	229.3	0	-0.1	0	-16.2	0
9	CR+SH+PT_EOC	714	709	120.1	0	25	0	-151.7	0
10	CR+SH+PT_EOC	714	710	-120.1	0	-25	0	-144	0
11	CR+SH+PT_EOC	717	711	-248.2	0	-0.8	0	14.1	0
12	CR+SH+PT_EOC	717	712	248.2	0	0.8	0	5.9	0
13	CR+SH+PT_EOC	720	713	125.4	0	-15.5	0	105.7	0
14	CR+SH+PT_EOC	720	714	-125.4	0	15.5	0	100.8	0
15	CR+SH+PT_EOC	723	715	-186	0	-1.8	0	17.9	0
16	CR+SH+PT_EOC	723	716	186	0	1.8	0	18.5	0
17	CR+SH+PT_EOC	726	717	108.2	0	-5.7	0	42.4	0
18	CR+SH+PT_EOC	726	718	-108.2	0	5.7	0	52.6	0
19	CR+SH+PT_EOC	729	719	-108.6	0	-6.8	0	49.8	0
20	CR+SH+PT_EOC	729	720	108.6	0	6.8	0	58.3	0
21	CR+SH+PT_EOC	732	721	34.6	0	-2.9	0	41.9	0
22	CR+SH+PT_EOC	732	722	-34.6	0	2.9	0	23	0
1	DC	702	701	61.9	0	1.4	0.1	3.4	-0.3
2	DC	702	702	-51.6	0	-1.4	-0.1	-21.8	-0.1
3	DC	705	703	1848.7	0	0.7	-0.1	297.5	0.1
4	DC	705	704	-1839.2	0	20.2	0.1	-13.2	0
5	DC	708	705	-608.9	0	-26.1	0	190.6	0.1
6	DC	708	706	614.4	0	27.8	0	104.6	0
7	DC	711	707	732.1	0	3.7	0	37.7	0.1
8	DC	711	708	-725.8	0	8.8	0	30.6	0
9	DC	714	709	-243.2	0	-16.1	0	83.9	0
10	DC	714	710	249.4	0	16.2	0	106.9	0
11	DC	717	711	27.8	0	3.5	0	31.3	0
12	DC	717	712	-21.5	0	7.3	0	13.8	0
13	DC	720	713	86	0	-6.5	0	59.7	0
14	DC	720	714	-79.5	0	9	0	43.1	0
15	DC	723	715	-587	0	1.2	0	29.4	0
16	DC	723	716	593.4	0	7.2	0	31.7	0
17	DC	726	717	599.6	0	-6.6	0	110.5	0
18	DC	726	718	-593.2	0	12.5	0	48.2	0
19	DC	729	719	-870.9	0	12.6	0	-101.3	0
20	DC	729	720	877.5	0	-7.4	0	-57.1	-0.1
21	DC	732	721	1382.1	0	10.3	0	-66.5	0
22	DC	732	722	-1375.9	0	-0.2	0	-52.3	0

Load (Row) Number	User's Load ID	Member ID	Joint ID	Fx (kips)	Fy (kips)	Fz (kips)	Mx (ft*kip)	My (ft*kip)	Mz (ft*kip)
1	DW	702	701	0	0	0	0	0	0
2	DW	702	702	0	0	0	0	0	0
3	DW	705	703	82.2	0	-0.5	0	19.8	0
4	DW	705	704	-82.2	0	0.5	0	-5.3	0
5	DW	708	705	-34	0	-0.5	0	5.3	0
6	DW	708	706	34	0	0.5	0	0.5	0
7	DW	711	707	16.7	0	-0.1	0	2.1	0
8	DW	711	708	-16.7	0	0.1	0	-0.3	0
9	DW	714	709	-13.6	0	0	0	-0.5	0
10	DW	714	710	13.6	0	0	0	0	0
11	DW	717	711	-19.8	0	-0.1	0	1.8	0
12	DW	717	712	19.8	0	0.1	0	-0.3	0
13	DW	720	713	2	0	-0.9	0	6.1	0
14	DW	720	714	-2	0	0.9	0	5.7	0
15	DW	723	715	-46.3	0	-0.1	0	1.5	0
16	DW	723	716	46.3	0	0.1	0	0.8	0
17	DW	726	717	22.2	0	-0.6	0	5.7	0
18	DW	726	718	-22.2	0	0.6	0	3.9	0
19	DW	729	719	-55	0	0.2	0	-2.6	0
20	DW	729	720	55	0	-0.2	0	-1.3	0
21	DW	732	721	48.8	0	0	0	0	0
22	DW	732	722	-48.8	0	0	0	-1	0
1	LL1_Deck	702	701	0	0	0	0	0	0
2	LL1_Deck	702	702	0	0	0	0	0	0
3	LL1_Deck	705	703	300.7	0	-1.8	0	72.4	0
4	LL1_Deck	705	704	-300.7	0	1.8	0	-19.3	0
5	LL1_Deck	708	705	-124.3	0	-1.9	0	19.5	0
6	LL1_Deck	708	706	124.3	0	1.9	0	1.8	0
7	LL1_Deck	711	707	61	0	-0.2	0	7.6	0
8	LL1_Deck	711	708	-61	0	0.2	0	-1	0
9	LL1_Deck	714	709	-49.6	0	0.2	0	-2	0
10	LL1_Deck	714	710	49.6	0	-0.2	0	0	0
11	LL1_Deck	717	711	-72.5	0	-0.2	0	6.4	0
12	LL1_Deck	717	712	72.5	0	0.2	0	-1	0
13	LL1_Deck	720	713	7.3	0	-3.2	0	22.3	0
14	LL1_Deck	720	714	-7.3	0	3.2	0	20.9	0
15	LL1_Deck	723	715	-169.6	0	-0.4	0	5.6	0
16	LL1_Deck	723	716	169.6	0	0.4	0	2.9	0
17	LL1_Deck	726	717	81.2	0	-2.1	0	20.8	0
18	LL1_Deck	726	718	-81.2	0	2.1	0	14.2	0
19	LL1_Deck	729	719	-201.3	0	0.9	0	-9.5	0
20	LL1_Deck	729	720	201.3	0	-0.9	0	-4.7	0
21	LL1_Deck	732	721	178.4	0	0.2	0	0	0
22	LL1_Deck	732	722	-178.4	0	-0.2	0	-3.5	0
1	LL1_Deck Offset	702	701	0	0	0	0	0	0
2	LL1_Deck Offset	702	702	0	0	0	0	0	0
3	LL1_Deck Offset	705	703	150.4	-3.1	-0.9	32.6	36.2	-52.8
4	LL1_Deck Offset	705	704	-150.4	3.1	0.9	-32.6	-9.7	-37.7
5	LL1_Deck Offset	708	705	-62.1	-3.5	-1	2.4	9.8	-11.8
6	LL1_Deck Offset	708	706	62.1	3.5	1	-2.4	0.9	-26.8
7	LL1_Deck Offset	711	707	30.5	-0.5	-0.1	-6.2	3.8	0.2
8	LL1_Deck Offset	711	708	-30.5	0.5	0.1	6.2	-0.5	-14.6
9	LL1_Deck Offset	714	709	-24.8	7	0.1	4.1	-1	87.9
10	LL1_Deck Offset	714	710	24.8	-7	-0.1	-4.1	0	-5.3
11	LL1_Deck Offset	717	711	-36.3	0.8	-0.1	-19	3.2	26.8
12	LL1_Deck Offset	717	712	36.3	-0.8	0.1	19	-0.5	-8.9
13	LL1_Deck Offset	720	713	3.6	-9.5	-1.6	20.4	11.2	-111.8
14	LL1_Deck Offset	720	714	-3.6	9.5	1.6	-20.4	10.5	-14.9
15	LL1_Deck Offset	723	715	-84.8	2.9	-0.2	-23.4	2.8	56
16	LL1_Deck Offset	723	716	84.8	-2.9	0.2	23.4	1.4	2.1
17	LL1_Deck Offset	726	717	40.6	-4.7	-1.1	21.2	10.4	-57.6
18	LL1_Deck Offset	726	718	-40.6	4.7	1.1	-21.2	7.1	-21
19	LL1_Deck Offset	729	719	-100.7	6.3	0.4	-17.4	-4.8	84.5
20	LL1_Deck Offset	729	720	100.7	-6.3	-0.4	17.4	-2.3	15.6
21	LL1_Deck Offset	732	721	89.2	0.2	0.1	0.9	0	5.4
22	LL1_Deck Offset	732	722	-89.2	-0.2	-0.1	-0.9	-1.8	-1.7

Load (Row) Number	User's Load ID	Member ID	Joint ID	Fx (kips)	Fy (kips)	Fz (kips)	Mx (ft*kip)	My (ft*kip)	Mz (ft*kip)
1	LL1_Roof	702	701	0	0	0	0	0	0
2	LL1_Roof	702	702	0	0	0	0	0	0
3	LL1_Roof	705	703	43.6	0	2.6	0	-10.2	0
4	LL1_Roof	705	704	-43.6	0	-2.6	0	-64.5	0
5	LL1_Roof	708	705	-2.4	0	4.3	0	-10.2	0
6	LL1_Roof	708	706	2.4	0	-4.3	0	-37.2	0
7	LL1_Roof	711	707	1	0	-0.2	0	2.7	0
8	LL1_Roof	711	708	-1	0	0.2	0	3.8	0
9	LL1_Roof	714	709	2.2	0	-0.6	0	0.9	0
10	LL1_Roof	714	710	-2.2	0	0.6	0	6.3	0
11	LL1_Roof	717	711	-5.9	0	0.1	0	-0.5	0
12	LL1_Roof	717	712	5.9	0	-0.1	0	-1.1	0
13	LL1_Roof	720	713	9.5	0	-0.4	0	2.3	0
14	LL1_Roof	720	714	-9.5	0	0.4	0	2.8	0
15	LL1_Roof	723	715	-14.6	0	0	0	0.3	0
16	LL1_Roof	723	716	14.6	0	0	0	0.2	0
17	LL1_Roof	726	717	16.7	0	-0.2	0	2.1	0
18	LL1_Roof	726	718	-16.7	0	0.2	0	0.9	0
19	LL1_Roof	729	719	-15.1	0	0.2	0	-2.3	0
20	LL1_Roof	729	720	15.1	0	-0.2	0	-1.6	0
21	LL1_Roof	732	721	23.7	0	0.1	0	-1	0
22	LL1_Roof	732	722	-23.7	0	-0.1	0	-0.9	0
1	LL2_Deck	702	701	0	0	0	0	0	0
2	LL2_Deck	702	702	0	0	0	0	0	0
3	LL2_Deck	705	703	352.3	0	-1.9	0	77.2	0
4	LL2_Deck	705	704	-352.3	0	1.9	0	-21.9	0
5	LL2_Deck	708	705	-139.4	0	-2.9	0	26.5	0.1
6	LL2_Deck	708	706	139.4	0	2.9	0	5.5	0
7	LL2_Deck	711	707	93.4	0	-0.3	0	8.8	0
8	LL2_Deck	711	708	-93.4	0	0.3	0	-1.2	0
9	LL2_Deck	714	709	-58.8	0	-0.7	0	3.5	0
10	LL2_Deck	714	710	58.8	0	0.7	0	5	0
11	LL2_Deck	717	711	-53.5	0	-0.3	0	7.5	0
12	LL2_Deck	717	712	53.5	0	0.3	0	-1.5	0
13	LL2_Deck	720	713	4.6	0	-3.1	0	21.3	0
14	LL2_Deck	720	714	-4.6	0	3.1	0	19.7	0
15	LL2_Deck	723	715	-165.5	0	-0.5	0	6.4	0
16	LL2_Deck	723	716	165.5	0	0.5	0	2.8	0
17	LL2_Deck	726	717	89.8	0	-2.1	0	21.8	0
18	LL2_Deck	726	718	-89.8	0	2.1	0	13.9	0
19	LL2_Deck	729	719	-209.3	0	1.1	0	-10.7	0
20	LL2_Deck	729	720	209.3	0	-1.1	0	-6.1	0
21	LL2_Deck	732	721	200	0	0.2	0	0.3	0
22	LL2_Deck	732	722	-200	0	-0.2	0	-4.2	0
1	LL2_Deck Offset	702	701	0	0	0	0	0	0
2	LL2_Deck Offset	702	702	0	0	0	0	0	0
3	LL2_Deck Offset	705	703	176.1	-3.2	-0.9	34.6	38.6	-55.1
4	LL2_Deck Offset	705	704	-176.1	3.2	0.9	-34.6	-11	-38.7
5	LL2_Deck Offset	708	705	-69.7	-4	-1.5	2.9	13.2	-16.6
6	LL2_Deck Offset	708	706	69.7	4	1.5	-2.9	2.8	-27.6
7	LL2_Deck Offset	711	707	46.7	-0.6	-0.1	-5.6	4.4	-0.9
8	LL2_Deck Offset	711	708	-46.7	0.6	0.1	5.6	-0.6	-15.1
9	LL2_Deck Offset	714	709	-29.4	6.6	-0.4	4.2	1.8	84
10	LL2_Deck Offset	714	710	29.4	-6.6	0.4	-4.2	2.5	-5.9
11	LL2_Deck Offset	717	711	-26.8	0.7	-0.1	-18.6	3.8	25.9
12	LL2_Deck Offset	717	712	26.8	-0.7	0.1	18.6	-0.7	-9.7
13	LL2_Deck Offset	720	713	2.3	-9.2	-1.5	20.3	10.7	-108.3
14	LL2_Deck Offset	720	714	-2.3	9.2	1.5	-20.3	9.9	-13.8
15	LL2_Deck Offset	723	715	-82.8	2.7	-0.2	-23.2	3.2	54.9
16	LL2_Deck Offset	723	716	82.8	-2.7	0.2	23.2	1.4	0.3
17	LL2_Deck Offset	726	717	44.9	-4.5	-1.1	21.1	10.9	-55.1
18	LL2_Deck Offset	726	718	-44.9	4.5	1.1	-21.1	7	-20.2
19	LL2_Deck Offset	729	719	-104.7	6	0.5	-17.1	-5.3	83.4
20	LL2_Deck Offset	729	720	104.7	-6	-0.5	17.1	-3.1	12.2
21	LL2_Deck Offset	732	721	100	0.2	0.1	0.8	0.2	6.5
22	LL2_Deck Offset	732	722	-100	-0.2	-0.1	-0.8	-2.1	-2.4

Load (Row) Number	User's Load ID	Member ID	Joint ID	Fx (kips)	Fy (kips)	Fz (kips)	Mx (ft*kip)	My (ft*kip)	Mz (ft*kip)
1	LL2_Roof	702	701	0	0	0	0	0	0
2	LL2_Roof	702	702	0	0	0	0	0	0
3	LL2_Roof	705	703	49	0	2.6	0	-9.7	0
4	LL2_Roof	705	704	-49	0	-2.6	0	-64.8	0
5	LL2_Roof	708	705	-3.9	0	4.2	0	-9.5	0
6	LL2_Roof	708	706	3.9	0	-4.2	0	-36.8	0
7	LL2_Roof	711	707	4.3	0	-0.2	0	2.8	0
8	LL2_Roof	711	708	-4.3	0	0.2	0	3.8	0
9	LL2_Roof	714	709	1.3	0	-0.7	0	1.4	0
10	LL2_Roof	714	710	-1.3	0	0.7	0	6.8	0
11	LL2_Roof	717	711	-4.1	0	0.1	0	-0.4	0
12	LL2_Roof	717	712	4.1	0	-0.1	0	-1.2	0
13	LL2_Roof	720	713	9.4	0	-0.4	0	2.2	0
14	LL2_Roof	720	714	-9.4	0	0.4	0	2.6	0
15	LL2_Roof	723	715	-14.5	0	0	0	0.4	0
16	LL2_Roof	723	716	14.5	0	0	0	0.2	0
17	LL2_Roof	726	717	18.1	0	-0.2	0	2.3	0
18	LL2_Roof	726	718	-18.1	0	0.2	0	0.9	0
19	LL2_Roof	729	719	-16.3	0	0.3	0	-2.6	0
20	LL2_Roof	729	720	16.3	0	-0.3	0	-1.8	0
21	LL2_Roof	732	721	26.9	0	0.1	0	-1.2	0
22	LL2_Roof	732	722	-26.9	0	-0.1	0	-1.1	0
1	LL3_Deck	702	701	0	0	0	0	0	0
2	LL3_Deck	702	702	0	0	0	0	0	0
3	LL3_Deck	705	703	-51.6	0	0.1	0	-4.9	0
4	LL3_Deck	705	704	51.6	0	-0.1	0	2.6	0
5	LL3_Deck	708	705	15.2	0	1	0	-7	-0.1
6	LL3_Deck	708	706	-15.2	0	-1	0	-3.8	0
7	LL3_Deck	711	707	-32.4	0	0	0	-1.1	0
8	LL3_Deck	711	708	32.4	0	0	0	0.2	0
9	LL3_Deck	714	709	9.1	0	0.9	0	-5.5	0
10	LL3_Deck	714	710	-9.1	0	-0.9	0	-5	0
11	LL3_Deck	717	711	-19	0	0	0	-1.1	0
12	LL3_Deck	717	712	19	0	0	0	0.5	0
13	LL3_Deck	720	713	2.7	0	-0.2	0	1	0
14	LL3_Deck	720	714	-2.7	0	0.2	0	1.2	0
15	LL3_Deck	723	715	-4	0	0	0	-0.8	0
16	LL3_Deck	723	716	4	0	0	0	0.1	0
17	LL3_Deck	726	717	-8.6	0	0	0	-1	0
18	LL3_Deck	726	718	8.6	0	0	0	0.3	0
19	LL3_Deck	729	719	8	0	-0.2	0	1.2	0
20	LL3_Deck	729	720	-8	0	0.2	0	1.5	0
21	LL3_Deck	732	721	-21.6	0	0	0	-0.3	0
22	LL3_Deck	732	722	21.6	0	0	0	0.7	0
1	LL3_Deck Offset	702	701	0	0	0	0	0	0
2	LL3_Deck Offset	702	702	0	0	0	0	0	0
3	LL3_Deck Offset	705	703	-25.8	0.1	0	-2	-2.4	2.3
4	LL3_Deck Offset	705	704	25.8	-0.1	0	2	1.3	0.9
5	LL3_Deck Offset	708	705	7.6	0.5	0.5	-0.6	-3.5	4.8
6	LL3_Deck Offset	708	706	-7.6	-0.5	-0.5	0.6	-1.9	0.7
7	LL3_Deck Offset	711	707	-16.2	0.1	0	-0.6	-0.6	1
8	LL3_Deck Offset	711	708	16.2	-0.1	0	0.6	0.1	0.4
9	LL3_Deck Offset	714	709	4.6	0.4	0.4	-0.2	-2.7	3.9
10	LL3_Deck Offset	714	710	-4.6	-0.4	-0.4	0.2	-2.5	0.6
11	LL3_Deck Offset	717	711	-9.5	0.1	0	-0.4	-0.5	0.9
12	LL3_Deck Offset	717	712	9.5	-0.1	0	0.4	0.2	0.8
13	LL3_Deck Offset	720	713	1.4	-0.3	-0.1	0.1	0.5	-3.5
14	LL3_Deck Offset	720	714	-1.4	0.3	0.1	-0.1	0.6	-1.1
15	LL3_Deck Offset	723	715	-2	0.1	0	-0.2	-0.4	1.1
16	LL3_Deck Offset	723	716	2	-0.1	0	0.2	0.1	1.8
17	LL3_Deck Offset	726	717	-4.3	-0.2	0	0.1	-0.5	-2.5
18	LL3_Deck Offset	726	718	4.3	0.2	0	-0.1	0.2	-0.8
19	LL3_Deck Offset	729	719	4	0.3	-0.1	-0.3	0.6	1.1
20	LL3_Deck Offset	729	720	-4	-0.3	0.1	0.3	0.7	3.4
21	LL3_Deck Offset	732	721	-10.8	0	0	0	-0.1	-1
22	LL3_Deck Offset	732	722	10.8	0	0	0	0.3	0.7

Load (Row) Number	User's Load ID	Member ID	Joint ID	Fx (kips)	Fy (kips)	Fz (kips)	Mx (ft*kip)	My (ft*kip)	Mz (ft*kip)
1	LL3_Roof	702	701	0	0	0	0	0	0
2	LL3_Roof	702	702	0	0	0	0	0	0
3	LL3_Roof	705	703	-5.4	0	0	0	-0.5	0
4	LL3_Roof	705	704	5.4	0	0	0	0.3	0
5	LL3_Roof	708	705	1.6	0	0.1	0	-0.7	0
6	LL3_Roof	708	706	-1.6	0	-0.1	0	-0.4	0
7	LL3_Roof	711	707	-3.3	0	0	0	-0.1	0
8	LL3_Roof	711	708	3.3	0	0	0	0	0
9	LL3_Roof	714	709	0.9	0	0.1	0	-0.5	0
10	LL3_Roof	714	710	-0.9	0	-0.1	0	-0.5	0
11	LL3_Roof	717	711	-1.8	0	0	0	-0.1	0
12	LL3_Roof	717	712	1.8	0	0	0	0.1	0
13	LL3_Roof	720	713	0.1	0	0	0	0.1	0
14	LL3_Roof	720	714	-0.1	0	0	0	0.1	0
15	LL3_Roof	723	715	-0.1	0	0	0	-0.1	0
16	LL3_Roof	723	716	0.1	0	0	0	0	0
17	LL3_Roof	726	717	-1.4	0	0	0	-0.2	0
18	LL3_Roof	726	718	1.4	0	0	0	0	0
19	LL3_Roof	729	719	1.2	0	0	0	0.3	0
20	LL3_Roof	729	720	-1.2	0	0	0	0.2	0
21	LL3_Roof	732	721	-3.2	0	0	0	0.2	0
22	LL3_Roof	732	722	3.2	0	0	0	0.2	0
1	TU-	702	701	0	0	0	0	0	0
2	TU-	702	702	0	0	0	0	0	0
3	TU-	705	703	-167	0	-0.2	0	-6.3	0
4	TU-	705	704	167	0	0.2	0	11.5	0
5	TU-	708	705	32	0	3	0	-20.8	0
6	TU-	708	706	-32	0	-3	0	-11.9	0
7	TU-	711	707	-75.4	0	0.2	0	-4.7	0
8	TU-	711	708	75.4	0	-0.2	0	0	0
9	TU-	714	709	7.9	0	1.5	0	-8.3	0
10	TU-	714	710	-7.9	0	-1.5	0	-9.3	0
11	TU-	717	711	-17.3	0	0.1	0	-2.2	0
12	TU-	717	712	17.3	0	-0.1	0	0.9	0
13	TU-	720	713	-14.9	0	0	0	-0.6	0
14	TU-	720	714	14.9	0	0	0	0.1	0
15	TU-	723	715	27.7	0	0.2	0	-2.4	0
16	TU-	723	716	-27.7	0	-0.2	0	-1.2	0
17	TU-	726	717	-60	0	0.9	0	-11.7	0
18	TU-	726	718	60	0	-0.9	0	-2.7	0
19	TU-	729	719	47.4	0	-1.3	0	14.7	0
20	TU-	729	720	-47.4	0	1.3	0	6	0
21	TU-	732	721	-220.3	0	-1.4	0	14.7	0
22	TU-	732	722	220.3	0	1.4	0	18	0
1	TU+	702	701	0	0	0	0	0	0
2	TU+	702	702	0	0	0	0	0	0
3	TU+	705	703	167	0	0.2	0	6.3	0
4	TU+	705	704	-167	0	-0.2	0	-11.5	0
5	TU+	708	705	-32	0	-3	0	20.8	0
6	TU+	708	706	32	0	3	0	11.9	0
7	TU+	711	707	75.4	0	-0.2	0	4.7	0
8	TU+	711	708	-75.4	0	0.2	0	0	0
9	TU+	714	709	-7.9	0	-1.5	0	8.3	0
10	TU+	714	710	7.9	0	1.5	0	9.3	0
11	TU+	717	711	17.3	0	-0.1	0	2.2	0
12	TU+	717	712	-17.3	0	0.1	0	-0.9	0
13	TU+	720	713	14.9	0	0	0	0.6	0
14	TU+	720	714	-14.9	0	0	0	-0.1	0
15	TU+	723	715	-27.7	0	-0.2	0	2.4	0
16	TU+	723	716	27.7	0	0.2	0	1.2	0
17	TU+	726	717	60	0	-0.9	0	11.7	0
18	TU+	726	718	-60	0	0.9	0	2.7	0
19	TU+	729	719	-47.4	0	1.3	0	-14.7	0
20	TU+	729	720	47.4	0	-1.3	0	-6	0
21	TU+	732	721	220.3	0	1.4	0	-14.7	0
22	TU+	732	722	-220.3	0	-1.4	0	-18	0

Load (Row) Number	User's Load ID	Member ID	Joint ID	Fx (kips)	Fy (kips)	Fz (kips)	Mx (ft*kip)	My (ft*kip)	Mz (ft*kip)
1	TU+Temp. Diff.	702	701	0	0	0	0	0	0
2	TU+Temp. Diff.	702	702	0	0	0	0	0	0
3	TU+Temp. Diff.	705	703	338.8	0	-0.1	0	24.9	0
4	TU+Temp. Diff.	705	704	-338.8	0	0.1	0	-21.2	0
5	TU+Temp. Diff.	708	705	-58.7	0	-5.4	0	38	0
6	TU+Temp. Diff.	708	706	58.7	0	5.4	0	21	0
7	TU+Temp. Diff.	711	707	133.9	0	-0.3	0	8.5	0
8	TU+Temp. Diff.	711	708	-133.9	0	0.3	0	0	0
9	TU+Temp. Diff.	714	709	-3.6	0	-2.5	0	13.5	0
10	TU+Temp. Diff.	714	710	3.6	0	2.5	0	16.3	0
11	TU+Temp. Diff.	717	711	10.3	0	-0.1	0	3.9	0
12	TU+Temp. Diff.	717	712	-10.3	0	0.1	0	-1.4	0
13	TU+Temp. Diff.	720	713	44.5	0	-0.5	0	5	0
14	TU+Temp. Diff.	720	714	-44.5	0	0.5	0	2.3	0
15	TU+Temp. Diff.	723	715	-75.7	0	-0.2	0	2.1	0
16	TU+Temp. Diff.	723	716	75.7	0	0.2	0	1.6	0
17	TU+Temp. Diff.	726	717	121	0	-1.3	0	17.3	0
18	TU+Temp. Diff.	726	718	-121	0	1.3	0	3.6	0
19	TU+Temp. Diff.	729	719	-102.2	0	2.6	0	-26	0
20	TU+Temp. Diff.	729	720	102.2	0	-2.6	0	-15.1	0
21	TU+Temp. Diff.	732	721	311.6	0	1.9	0	-20.3	0
22	TU+Temp. Diff.	732	722	-311.6	0	-1.9	0	-21.7	0
1	WS_0 DEG_SRVI	702	701	0	26.1	0	0	0	482.1
2	WS_0 DEG_SRVI	702	702	0	-27.4	0	0	0	-145.2
3	WS_0 DEG_SRVI	705	703	-0.2	-5.3	0	75.3	0	-84
4	WS_0 DEG_SRVI	705	704	0.2	2.3	0	-75.3	0	-26.5
5	WS_0 DEG_SRVI	708	705	0.1	-11.9	0	20.7	0	-126.8
6	WS_0 DEG_SRVI	708	706	-0.1	10.8	0	-20.7	0	1.9
7	WS_0 DEG_SRVI	711	707	-0.1	-2.6	0	18.5	0	-27.5
8	WS_0 DEG_SRVI	711	708	0.1	-0.1	0	-18.5	0	-5.3
9	WS_0 DEG_SRVI	714	709	0	-2.7	0	5.5	0	-47.9
10	WS_0 DEG_SRVI	714	710	0	1.5	0	-5.5	0	22.8
11	WS_0 DEG_SRVI	717	711	-0.1	-1.7	0	7.2	0	-9.8
12	WS_0 DEG_SRVI	717	712	0.1	-0.7	0	-7.2	0	-2
13	WS_0 DEG_SRVI	720	713	0	-0.4	0	0.8	0	10.8
14	WS_0 DEG_SRVI	720	714	0	1.7	0	-0.8	0	-24.5
15	WS_0 DEG_SRVI	723	715	0	-0.8	0	2.8	0	2.8
16	WS_0 DEG_SRVI	723	716	0	-1.3	0	-2.8	0	2.1
17	WS_0 DEG_SRVI	726	717	0	0.3	0	-3.2	0	11
18	WS_0 DEG_SRVI	726	718	0	1.4	0	3.2	0	-20.2
19	WS_0 DEG_SRVI	729	719	0	0.4	0	5.8	0	6.6
20	WS_0 DEG_SRVI	729	720	0	-2	0	-5.8	0	12.2
21	WS_0 DEG_SRVI	732	721	0	1.7	0	-12.2	0	25.4
22	WS_0 DEG_SRVI	732	722	0	0.5	0	12.2	0	-12
1	WS_15 DEG_SRVI	702	701	0	54.1	-1.9	0	13.2	1001.8
2	WS_15 DEG_SRVI	702	702	0	-55.1	2.1	0	11	-299.1
3	WS_15 DEG_SRVI	705	703	-12.4	-4.6	-0.1	67.9	0.4	-74.7
4	WS_15 DEG_SRVI	705	704	12	2.2	0.2	-67.9	4.4	-23.1
5	WS_15 DEG_SRVI	708	705	4.1	-10.3	0.1	18.4	-1.4	-111.7
6	WS_15 DEG_SRVI	708	706	-4.2	9.4	0	-18.4	1	4.1
7	WS_15 DEG_SRVI	711	707	-9.1	-2.2	0.1	16.7	-0.3	-24.2
8	WS_15 DEG_SRVI	711	708	8.8	0	0.1	-16.7	0.8	-4.3
9	WS_15 DEG_SRVI	714	709	3.6	-2	0.2	4.7	-1.6	-40.7
10	WS_15 DEG_SRVI	714	710	-3.6	1.1	-0.1	-4.7	-0.4	22.5
11	WS_15 DEG_SRVI	717	711	-7.2	-1.4	0.1	6.6	-0.4	-8.3
12	WS_15 DEG_SRVI	717	712	6.9	-0.6	0.1	-6.6	0.8	-1.3
13	WS_15 DEG_SRVI	720	713	3.1	-0.6	-0.1	0.5	0.3	8.1
14	WS_15 DEG_SRVI	720	714	-3	1.7	-0.1	-0.5	-0.3	-23.5
15	WS_15 DEG_SRVI	723	715	-5.6	-0.6	0	2.7	0	2.9
16	WS_15 DEG_SRVI	723	716	5.4	-1.1	0.1	-2.7	0.8	2.7
17	WS_15 DEG_SRVI	726	717	4.2	0.1	-0.2	-3.1	1.5	9.5
18	WS_15 DEG_SRVI	726	718	-4	1.3	0	3.1	0.3	-18.8
19	WS_15 DEG_SRVI	729	719	-1.6	0.5	0.2	5.4	-2.1	6.1
20	WS_15 DEG_SRVI	729	720	1.4	-1.8	-0.1	-5.4	-0.2	12.1
21	WS_15 DEG_SRVI	732	721	5.9	1.5	0.3	-11.4	-4.8	23.2
22	WS_15 DEG_SRVI	732	722	-5.7	0.4	-0.4	11.4	-2.7	-10.7

Load (Row) Number	User's Load ID	Member ID	Joint ID	Fx (kips)	Fy (kips)	Fz (kips)	Mx (ft*kip)	My (ft*kip)	Mz (ft*kip)
1	WS_-15 DEG_SRVI	702	701	0	54.1	1.9	0	-13.2	1001.8
2	WS_-15 DEG_SRVI	702	702	0	-55.1	-2.1	0	-11	-299.1
3	WS_-15 DEG_SRVI	705	703	12	-4.6	0.1	67.9	-0.4	-74.7
4	WS_-15 DEG_SRVI	705	704	-11.6	2.2	-0.2	-67.9	-4.4	-23.1
5	WS_-15 DEG_SRVI	708	705	-4	-10.3	-0.1	18.4	1.3	-111.7
6	WS_-15 DEG_SRVI	708	706	4.1	9.4	0	-18.4	-1	4.1
7	WS_-15 DEG_SRVI	711	707	8.9	-2.2	-0.1	16.7	0.3	-24.2
8	WS_-15 DEG_SRVI	711	708	-8.6	0	-0.1	-16.7	-0.8	-4.3
9	WS_-15 DEG_SRVI	714	709	-3.5	-2	-0.2	4.7	1.5	-40.7
10	WS_-15 DEG_SRVI	714	710	3.5	1.1	0.1	-4.7	0.4	22.5
11	WS_-15 DEG_SRVI	717	711	7	-1.4	-0.1	6.6	0.3	-8.3
12	WS_-15 DEG_SRVI	717	712	-6.8	-0.6	-0.1	-6.6	-0.8	-1.3
13	WS_-15 DEG_SRVI	720	713	-3	-0.6	0.1	0.5	-0.3	8.1
14	WS_-15 DEG_SRVI	720	714	3	1.7	0.1	-0.5	0.3	-23.5
15	WS_-15 DEG_SRVI	723	715	5.5	-0.6	0	2.7	0	2.9
16	WS_-15 DEG_SRVI	723	716	-5.3	-1.1	-0.1	-2.7	-0.8	2.7
17	WS_-15 DEG_SRVI	726	717	-4.2	0.1	0.2	-3.1	-1.5	9.5
18	WS_-15 DEG_SRVI	726	718	4	1.3	0	3.1	-0.2	-18.8
19	WS_-15 DEG_SRVI	729	719	1.6	0.5	-0.2	5.4	2.1	6.1
20	WS_-15 DEG_SRVI	729	720	-1.4	-1.8	0.1	-5.4	0.2	12.1
21	WS_-15 DEG_SRVI	732	721	-5.9	1.5	-0.3	-11.4	4.7	23.2
22	WS_-15 DEG_SRVI	732	722	5.6	0.4	0.4	11.4	2.7	-10.7
1	WS_30 DEG_SRVI	702	701	0	5.7	2.4	0	-12.3	52.9
2	WS_30 DEG_SRVI	702	702	0	-6.8	-1.9	0	-14	28.4
3	WS_30 DEG_SRVI	705	703	-26.8	-4.3	-0.2	62.1	0.9	-68.8
4	WS_30 DEG_SRVI	705	704	25.9	1.9	0.6	-62.1	9.6	-21.4
5	WS_30 DEG_SRVI	708	705	9	-9.5	0.3	16.8	-3	-102.2
6	WS_30 DEG_SRVI	708	706	-9.1	8.6	0.1	-16.8	2.1	2.9
7	WS_30 DEG_SRVI	711	707	-19.9	-2.1	0.2	15.1	-0.7	-22.2
8	WS_30 DEG_SRVI	711	708	19.1	-0.1	0.3	-15.1	1.9	-4
9	WS_30 DEG_SRVI	714	709	7.8	-1.9	0.6	4.4	-3.4	-36.6
10	WS_30 DEG_SRVI	714	710	-7.8	0.9	-0.2	-4.4	-0.8	20
11	WS_30 DEG_SRVI	717	711	-15.7	-1.3	0.2	5.8	-0.8	-7.5
12	WS_30 DEG_SRVI	717	712	15	-0.6	0.2	-5.8	1.8	-1.2
13	WS_30 DEG_SRVI	720	713	6.8	-0.6	-0.2	0.7	0.7	6.6
14	WS_30 DEG_SRVI	720	714	-6.6	1.6	-0.2	-0.7	-0.6	-21.1
15	WS_30 DEG_SRVI	723	715	-12.3	-0.5	0.1	2.2	0	3
16	WS_30 DEG_SRVI	723	716	11.8	-1.1	0.3	-2.2	1.9	2.5
17	WS_30 DEG_SRVI	726	717	9.4	0.1	-0.5	-2.6	3.5	8.2
18	WS_30 DEG_SRVI	726	718	-9	1.2	0	2.6	0.6	-17
19	WS_30 DEG_SRVI	729	719	-3.5	0.4	0.5	4.7	-4.8	6.2
20	WS_30 DEG_SRVI	729	720	3.2	-1.7	-0.1	-4.7	-0.4	10.9
21	WS_30 DEG_SRVI	732	721	13.7	1.4	0.6	-10.3	-10.8	21.3
22	WS_30 DEG_SRVI	732	722	-13.1	0.4	-0.9	10.3	-6.1	-9.7
1	WS_-30 DEG_SRVI	702	701	0	5.7	-2.4	0	12.3	52.9
2	WS_-30 DEG_SRVI	702	702	0	-6.8	1.9	0	14	28.4
3	WS_-30 DEG_SRVI	705	703	26.4	-4.3	0.2	62.1	-0.9	-68.8
4	WS_-30 DEG_SRVI	705	704	-25.5	1.9	-0.6	-62.1	-9.6	-21.4
5	WS_-30 DEG_SRVI	708	705	-8.9	-9.5	-0.3	16.8	2.9	-102.2
6	WS_-30 DEG_SRVI	708	706	9	8.6	-0.1	-16.8	-2.1	3
7	WS_-30 DEG_SRVI	711	707	19.7	-2.1	-0.2	15.1	0.7	-22.2
8	WS_-30 DEG_SRVI	711	708	-18.9	-0.1	-0.3	-15.1	-1.9	-4
9	WS_-30 DEG_SRVI	714	709	-7.7	-1.9	-0.6	4.4	3.4	-36.6
10	WS_-30 DEG_SRVI	714	710	7.7	0.9	0.2	-4.4	0.8	20
11	WS_-30 DEG_SRVI	717	711	15.6	-1.3	-0.2	5.8	0.8	-7.5
12	WS_-30 DEG_SRVI	717	712	-14.9	-0.6	-0.2	-5.8	-1.8	-1.2
13	WS_-30 DEG_SRVI	720	713	-6.8	-0.6	0.2	0.7	-0.7	6.6
14	WS_-30 DEG_SRVI	720	714	6.6	1.6	0.2	-0.7	0.6	-21.1
15	WS_-30 DEG_SRVI	723	715	12.3	-0.5	-0.1	2.2	0	3
16	WS_-30 DEG_SRVI	723	716	-11.8	-1.1	-0.3	-2.2	-1.9	2.5
17	WS_-30 DEG_SRVI	726	717	-9.4	0.1	0.5	-2.6	-3.5	8.2
18	WS_-30 DEG_SRVI	726	718	9	1.2	0	2.6	-0.6	-17
19	WS_-30 DEG_SRVI	729	719	3.5	0.4	-0.5	4.7	4.8	6.1
20	WS_-30 DEG_SRVI	729	720	-3.2	-1.7	0.1	-4.7	0.4	10.9
21	WS_-30 DEG_SRVI	732	721	-13.7	1.4	-0.6	-10.3	10.7	21.3
22	WS_-30 DEG_SRVI	732	722	13.1	0.4	0.9	10.3	6.1	-9.7

Load (Row) Number	User's Load ID	Member ID	Joint ID	Fx (kips)	Fy (kips)	Fz (kips)	Mx (ft*kip)	My (ft*kip)	Mz (ft*kip)
1	WS_45 DEG_SRVI	702	701	0	-3.2	0.7	0	-5.9	-70
2	WS_45 DEG_SRVI	702	702	0	2.4	-0.1	0	0.8	35.5
3	WS_45 DEG_SRVI	705	703	-37.9	-3.2	-0.2	48.5	1.2	-52.6
4	WS_45 DEG_SRVI	705	704	36.6	1.5	0.8	-48.5	13.3	-15.7
5	WS_45 DEG_SRVI	708	705	12.7	-7.2	0.4	13.3	-4.3	-79.8
6	WS_45 DEG_SRVI	708	706	-12.9	6.6	0.1	-13.3	2.6	4.5
7	WS_45 DEG_SRVI	711	707	-28.3	-1.5	0.2	12.2	-1.1	-17.3
8	WS_45 DEG_SRVI	711	708	27.2	0	0.4	-12.2	2.7	-2.8
9	WS_45 DEG_SRVI	714	709	11.1	-1.5	0.8	3.3	-5	-30.8
10	WS_45 DEG_SRVI	714	710	-11.1	0.8	-0.2	-3.3	-1.4	17.2
11	WS_45 DEG_SRVI	717	711	-22.4	-1	0.3	5.2	-1.2	-6.4
12	WS_45 DEG_SRVI	717	712	21.4	-0.4	0.4	-5.2	2.5	-0.7
13	WS_45 DEG_SRVI	720	713	9.8	-0.3	-0.3	-0.1	1.1	7.8
14	WS_45 DEG_SRVI	720	714	-9.5	1.1	-0.3	0.1	-0.7	-17.4
15	WS_45 DEG_SRVI	723	715	-17.8	-0.4	0.2	2.5	0	1.2
16	WS_45 DEG_SRVI	723	716	17	-0.7	0.4	-2.5	2.7	2.1
17	WS_45 DEG_SRVI	726	717	13.8	0.1	-0.7	-2.8	5.3	7.8
18	WS_45 DEG_SRVI	726	718	-13.2	0.8	0.1	2.8	0.9	-13.6
19	WS_45 DEG_SRVI	729	719	-5.2	0.3	0.8	4.4	-7.1	3
20	WS_45 DEG_SRVI	729	720	4.7	-1.2	-0.2	-4.4	-0.6	8.8
21	WS_45 DEG_SRVI	732	721	20.4	1	0.8	-8.5	-15.8	16.6
22	WS_45 DEG_SRVI	732	722	-19.5	0.3	-1.4	8.5	-9	-7.7
1	WS_-45 DEG_SRVI	702	701	0	-3.2	-0.7	0	5.9	-70
2	WS_-45 DEG_SRVI	702	702	0	2.4	0.1	0	-0.8	35.5
3	WS_-45 DEG_SRVI	705	703	37.7	-3.2	0.2	48.5	-1.2	-52.6
4	WS_-45 DEG_SRVI	705	704	-36.3	1.5	-0.8	-48.5	-13.2	-15.6
5	WS_-45 DEG_SRVI	708	705	-12.6	-7.2	-0.4	13.3	4.3	-79.8
6	WS_-45 DEG_SRVI	708	706	12.8	6.6	-0.1	-13.3	-2.6	4.5
7	WS_-45 DEG_SRVI	711	707	28.2	-1.5	-0.2	12.2	1.1	-17.3
8	WS_-45 DEG_SRVI	711	708	-27	0	-0.4	-12.2	-2.7	-2.8
9	WS_-45 DEG_SRVI	714	709	-11.1	-1.5	-0.8	3.3	4.9	-30.7
10	WS_-45 DEG_SRVI	714	710	11.1	0.8	0.2	-3.3	1.3	17.2
11	WS_-45 DEG_SRVI	717	711	22.3	-1	-0.3	5.2	1.2	-6.4
12	WS_-45 DEG_SRVI	717	712	-21.3	-0.4	-0.4	-5.2	-2.5	-0.7
13	WS_-45 DEG_SRVI	720	713	-9.7	-0.3	0.3	-0.1	-1.1	7.8
14	WS_-45 DEG_SRVI	720	714	9.5	1.1	0.3	0.1	0.7	-17.4
15	WS_-45 DEG_SRVI	723	715	17.8	-0.4	-0.2	2.5	0	1.2
16	WS_-45 DEG_SRVI	723	716	-17	-0.7	-0.4	-2.5	-2.7	2.1
17	WS_-45 DEG_SRVI	726	717	-13.8	0.1	0.7	-2.8	-5.2	7.8
18	WS_-45 DEG_SRVI	726	718	13.2	0.8	-0.1	2.8	-0.9	-13.6
19	WS_-45 DEG_SRVI	729	719	5.2	0.3	-0.8	4.4	7.1	3
20	WS_-45 DEG_SRVI	729	720	-4.7	-1.2	0.2	-4.4	0.6	8.8
21	WS_-45 DEG_SRVI	732	721	-20.4	1	-0.8	-8.5	15.7	16.6
22	WS_-45 DEG_SRVI	732	722	19.5	0.3	1.4	8.5	9	-7.7
1	WS_60 DEG_SRVI	702	701	0	-1	-12.4	0	80.9	-11.2
2	WS_60 DEG_SRVI	702	702	0	0.6	13.2	0	77.3	0.6
3	WS_60 DEG_SRVI	705	703	-45.7	-1.8	-0.2	31.2	1.4	-32.3
4	WS_60 DEG_SRVI	705	704	44.1	1	1	-31.2	15.9	-8.5
5	WS_60 DEG_SRVI	708	705	15.3	-4.3	0.5	8.7	-5.2	-51.3
6	WS_60 DEG_SRVI	708	706	-15.5	4	0.1	-8.7	3.1	6
7	WS_60 DEG_SRVI	711	707	-34.1	-0.9	0.3	8.5	-1.3	-11.1
8	WS_60 DEG_SRVI	711	708	32.7	0.1	0.4	-8.5	3.3	-1.2
9	WS_60 DEG_SRVI	714	709	13.4	-1	1	2	-6	-22.7
10	WS_60 DEG_SRVI	714	710	-13.4	0.6	-0.3	-2	-1.7	13.3
11	WS_60 DEG_SRVI	717	711	-27	-0.6	0.3	4.3	-1.4	-4.9
12	WS_60 DEG_SRVI	717	712	25.8	-0.2	0.4	-4.3	3	-0.1
13	WS_60 DEG_SRVI	720	713	11.8	-0.1	-0.4	-0.9	1.3	8.7
14	WS_60 DEG_SRVI	720	714	-11.5	0.5	-0.3	0.9	-0.9	-12.4
15	WS_60 DEG_SRVI	723	715	-21.4	-0.3	0.2	2.7	-0.1	-0.8
16	WS_60 DEG_SRVI	723	716	20.5	-0.3	0.5	-2.7	3.3	1.6
17	WS_60 DEG_SRVI	726	717	16.6	0.1	-0.8	-2.9	6.3	7
18	WS_60 DEG_SRVI	726	718	-15.9	0.4	0.1	2.9	1.1	-9.2
19	WS_60 DEG_SRVI	729	719	-6.2	0.1	1	3.9	-8.5	-0.7
20	WS_60 DEG_SRVI	729	720	5.6	-0.6	-0.2	-3.9	-0.8	6.2
21	WS_60 DEG_SRVI	732	721	24.6	0.6	1	-6.2	-19	10.8
22	WS_60 DEG_SRVI	732	722	-23.4	0.1	-1.7	6.2	-10.8	-5.2

Load (Row) Number	User's Load ID	Member ID	Joint ID	Fx (kips)	Fy (kips)	Fz (kips)	Mx (ft*kip)	My (ft*kip)	Mz (ft*kip)
1	WS_-60 DEG_SRVI	702	701	0	-1	12.4	0	-80.9	-11.2
2	WS_-60 DEG_SRVI	702	702	0	0.6	-13.2	0	-77.3	0.6
3	WS_-60 DEG_SRVI	705	703	45.6	-1.8	0.2	31.2	-1.4	-32.2
4	WS_-60 DEG_SRVI	705	704	-44	1	-1	-31.2	-15.9	-8.5
5	WS_-60 DEG_SRVI	708	705	-15.3	-4.3	-0.5	8.7	5.2	-51.3
6	WS_-60 DEG_SRVI	708	706	15.5	4	-0.1	-8.7	-3.1	6
7	WS_-60 DEG_SRVI	711	707	34.1	-0.9	-0.3	8.5	1.3	-11.1
8	WS_-60 DEG_SRVI	711	708	-32.6	0.1	-0.4	-8.5	-3.3	-1.2
9	WS_-60 DEG_SRVI	714	709	-13.4	-1	-1	2	6	-22.7
10	WS_-60 DEG_SRVI	714	710	13.4	0.6	0.3	-2	1.6	13.3
11	WS_-60 DEG_SRVI	717	711	27	-0.6	-0.3	4.3	1.4	-4.9
12	WS_-60 DEG_SRVI	717	712	-25.7	-0.2	-0.4	-4.3	-3	-0.1
13	WS_-60 DEG_SRVI	720	713	-11.7	-0.1	0.4	-0.9	-1.3	8.7
14	WS_-60 DEG_SRVI	720	714	11.5	0.5	0.3	0.9	0.9	-12.4
15	WS_-60 DEG_SRVI	723	715	21.4	-0.3	-0.2	2.7	0.1	-0.8
16	WS_-60 DEG_SRVI	723	716	-20.5	-0.3	-0.5	-2.7	-3.3	1.6
17	WS_-60 DEG_SRVI	726	717	-16.6	0.1	0.8	-2.9	-6.3	7
18	WS_-60 DEG_SRVI	726	718	15.9	0.4	-0.1	2.9	-1.1	-9.1
19	WS_-60 DEG_SRVI	729	719	6.2	0.1	-1	3.9	8.5	-0.7
20	WS_-60 DEG_SRVI	729	720	-5.6	-0.6	0.2	-3.9	0.8	6.2
21	WS_-60 DEG_SRVI	732	721	-24.5	0.6	-1	-6.2	19	10.8
22	WS_-60 DEG_SRVI	732	722	23.4	0.1	1.7	6.2	10.8	-5.2

AASHTO Limit State: SRV 3 - SERVICE III													
Max/ Min ID	Load Num	Member Num	Joint Num	Limit State/ Combo ID	Fx (kips)	Fy (kips)	Fz (kips)	Mx (ft*kip)	My (ft*kip)	Mz (ft*kip)	Mxy (ft*kip)	Mxz (ft*kip)	Myz (ft*kip)
Max Fx	3	705	703	SRV 3/ 49	2480.2	0.0	1.7	-0.1	298.2	0.1	298.2	0.1	298.2
Max Fy	14	720	714	SRV 3/ 2	-194.9	7.6	26.7	-16.3	158.1	-11.9	158.9	20.2	158.5
Max Fz	2	702	702	SRV 3/ 28	-76.7	0.0	96.3	-0.1	622.7	-0.1	622.7	0.1	622.7
Max Mx	3	705	703	SRV 3/ 5	1619.0	-2.6	2.2	27.6	238.5	-44.0	240.1	51.9	242.5
Max My	1	702	701	SRV 3/ 28	87.0	0.0	-96.3	0.1	638.7	-0.2	638.7	0.2	638.7
Max Mz	9	714	709	SRV 3/ 2	-148.6	5.6	10.5	3.3	-77.4	70.3	77.5	70.4	104.6
Max Mxy	1	702	701	SRV 3/ 28	87.0	0.0	-96.3	0.1	638.7	-0.2	638.7	0.2	638.7
Max Mxz	13	720	713	SRV 3/ 2	201.4	-7.6	-24.2	16.3	179.9	-89.4	180.6	90.9	200.9
Max Myz	1	702	701	SRV 3/ 28	87.0	0.0	-96.3	0.1	638.7	-0.2	638.7	0.2	638.7
Min Fx	4	705	704	SRV 3/ 49	-2470.7	0.0	19.2	0.1	-42.2	0.0	42.2	0.1	42.2
Min Fy	13	720	713	SRV 3/ 2	201.4	-7.6	-24.2	16.3	179.9	-89.4	180.6	90.9	200.9
Min Fz	1	702	701	SRV 3/ 28	87.0	0.0	-96.3	0.1	638.7	-0.2	638.7	0.2	638.7
Min Mx	4	705	704	SRV 3/ 5	-1609.5	2.6	18.7	-27.6	3.9	-31.0	27.9	41.5	31.2
Min My	19	729	719	SRV 3/ 22	-1304.1	0.0	9.5	0.0	-88.7	0.0	88.7	0.0	88.7
Min Mz	13	720	713	SRV 3/ 2	201.4	-7.6	-24.2	16.3	179.9	-89.4	180.6	90.9	200.9
Min Mxy	20	729	720	SRV 3/ 4	1161.1	0.0	-0.4	0.0	1.0	-0.1	1.0	0.1	1.0
Min Mxz	6	708	706	SRV 3/ 1	592.7	0.0	12.5	0.0	44.4	0.0	44.4	0.0	44.4
Min Myz	20	729	720	SRV 3/ 4	1161.1	0.0	-0.4	0.0	1.0	-0.1	1.0	0.1	1.0

AASHTO Limit State: SRV 3 - SERVICE III

	Max/ Min ID	Combo ID	Fx (kips)	Fy (kips)	Fz (kips)	Mx (ft*kip)	My (ft*kip)	Mz (ft*kip)	Mxy (ft*kip)	Mxz (ft*kip)	Myz (ft*kip)
	Max Fx	SRV 3/ 28	87.0	0.0	-96.3	0.1	638.7	-0.2	638.7	0.2	638.7
	Max Fy	SRV 3/ 1	82.1	0.0	-71.5	0.1	387.1	-0.2	387.1	0.2	387.1
	Max Fz	SRV 3/ 1	82.1	0.0	-71.5	0.1	387.1	-0.2	387.1	0.2	387.1
	Max Mx	SRV 3/ 1	82.1	0.0	-71.5	0.1	387.1	-0.2	387.1	0.2	387.1
	Max My	SRV 3/ 28	87.0	0.0	-96.3	0.1	638.7	-0.2	638.7	0.2	638.7
Load No.	Max Mz	SRV 3/ 1	82.1	0.0	-71.5	0.1	387.1	-0.2	387.1	0.2	387.1
1	Max Mxy	SRV 3/ 28	87.0	0.0	-96.3	0.1	638.7	-0.2	638.7	0.2	638.7
	Max Mxz	SRV 3/ 1	82.1	0.0	-71.5	0.1	387.1	-0.2	387.1	0.2	387.1
Member	Max Myz	SRV 3/ 28	87.0	0.0	-96.3	0.1	638.7	-0.2	638.7	0.2	638.7
702	Min Fx	SRV 3/ 1	82.1	0.0	-71.5	0.1	387.1	-0.2	387.1	0.2	387.1
	Min Fy	SRV 3/ 1	82.1	0.0	-71.5	0.1	387.1	-0.2	387.1	0.2	387.1
Joint	Min Fz	SRV 3/ 28	87.0	0.0	-96.3	0.1	638.7	-0.2	638.7	0.2	638.7
701	Min Mx	SRV 3/ 1	82.1	0.0	-71.5	0.1	387.1	-0.2	387.1	0.2	387.1
	Min My	SRV 3/ 1	82.1	0.0	-71.5	0.1	387.1	-0.2	387.1	0.2	387.1
	Min Mz	SRV 3/ 1	82.1	0.0	-71.5	0.1	387.1	-0.2	387.1	0.2	387.1
	Min Mxy	SRV 3/ 1	82.1	0.0	-71.5	0.1	387.1	-0.2	387.1	0.2	387.1
	Min Mxz	SRV 3/ 1	82.1	0.0	-71.5	0.1	387.1	-0.2	387.1	0.2	387.1
	Min Myz	SRV 3/ 1	82.1	0.0	-71.5	0.1	387.1	-0.2	387.1	0.2	387.1
	Max Fx	SRV 3/ 1	-71.8	0.0	71.5	-0.1	549.5	-0.1	549.5	0.1	549.5
	Max Fy	SRV 3/ 1	-71.8	0.0	71.5	-0.1	549.5	-0.1	549.5	0.1	549.5
	Max Fz	SRV 3/ 28	-76.7	0.0	96.3	-0.1	622.7	-0.1	622.7	0.1	622.7
	Max Mx	SRV 3/ 1	-71.8	0.0	71.5	-0.1	549.5	-0.1	549.5	0.1	549.5
	Max My	SRV 3/ 28	-76.7	0.0	96.3	-0.1	622.7	-0.1	622.7	0.1	622.7
Load No.	Max Mz	SRV 3/ 1	-71.8	0.0	71.5	-0.1	549.5	-0.1	549.5	0.1	549.5
2	Max Mxy	SRV 3/ 28	-76.7	0.0	96.3	-0.1	622.7	-0.1	622.7	0.1	622.7
	Max Mxz	SRV 3/ 1	-71.8	0.0	71.5	-0.1	549.5	-0.1	549.5	0.1	549.5
Member	Max Myz	SRV 3/ 28	-76.7	0.0	96.3	-0.1	622.7	-0.1	622.7	0.1	622.7
702	Min Fx	SRV 3/ 28	-76.7	0.0	96.3	-0.1	622.7	-0.1	622.7	0.1	622.7
	Min Fy	SRV 3/ 1	-71.8	0.0	71.5	-0.1	549.5	-0.1	549.5	0.1	549.5
Joint	Min Fz	SRV 3/ 1	-71.8	0.0	71.5	-0.1	549.5	-0.1	549.5	0.1	549.5
702	Min Mx	SRV 3/ 1	-71.8	0.0	71.5	-0.1	549.5	-0.1	549.5	0.1	549.5
	Min My	SRV 3/ 1	-71.8	0.0	71.5	-0.1	549.5	-0.1	549.5	0.1	549.5
	Min Mz	SRV 3/ 1	-71.8	0.0	71.5	-0.1	549.5	-0.1	549.5	0.1	549.5
	Min Mxy	SRV 3/ 1	-71.8	0.0	71.5	-0.1	549.5	-0.1	549.5	0.1	549.5
	Min Mxz	SRV 3/ 1	-71.8	0.0	71.5	-0.1	549.5	-0.1	549.5	0.1	549.5
	Min Myz	SRV 3/ 1	-71.8	0.0	71.5	-0.1	549.5	-0.1	549.5	0.1	549.5

AASHTO Limit State: SRV 3 - SERVICE III

	Max/ Min ID	Combo ID	Fx (kips)	Fy (kips)	Fz (kips)	Mx (ft*kip)	My (ft*kip)	Mz (ft*kip)	Mxy (ft*kip)	Mxz (ft*kip)	Myz (ft*kip)
	Max Fx	SRV 3/ 49	2480.2	0.0	1.7	-0.1	298.2	0.1	298.2	0.1	298.2
	Max Fy	SRV 3/ 8	1457.5	0.1	2.9	-1.7	205.7	1.9	205.7	2.6	205.7
	Max Fz	SRV 3/ 39	2061.5	0.0	5.6	-0.1	209.6	0.1	209.6	0.1	209.6
	Max Mx	SRV 3/ 5	1619.0	-2.6	2.2	27.6	238.5	-44.0	240.1	51.9	242.5
	Max My	SRV 3/ 22	2265.7	0.0	1.5	-0.1	300.6	0.1	300.6	0.1	300.6
Load No.	Max Mz	SRV 3/ 8	1457.5	0.1	2.9	-1.7	205.7	1.9	205.7	2.6	205.7
3	Max Mxy	SRV 3/ 22	2265.7	0.0	1.5	-0.1	300.6	0.1	300.6	0.1	300.6
	Max Mxz	SRV 3/ 5	1619.0	-2.6	2.2	27.6	238.5	-44.0	240.1	51.9	242.5
Member	Max Myz	SRV 3/ 22	2265.7	0.0	1.5	-0.1	300.6	0.1	300.6	0.1	300.6
705	Min Fx	SRV 3/ 7	1436.8	0.0	3.0	-0.1	203.7	0.1	203.7	0.1	203.7
	Min Fy	SRV 3/ 5	1619.0	-2.6	2.2	27.6	238.5	-44.0	240.1	51.9	242.5
Joint	Min Fz	SRV 3/ 4	1759.9	0.0	1.4	-0.1	269.4	0.1	269.4	0.1	269.4
703	Min Mx	SRV 3/ 8	1457.5	0.1	2.9	-1.7	205.7	1.9	205.7	2.6	205.7
	Min My	SRV 3/ 30	1727.5	0.0	5.2	-0.1	197.0	0.1	197.0	0.1	197.0
	Min Mz	SRV 3/ 5	1619.0	-2.6	2.2	27.6	238.5	-44.0	240.1	51.9	242.5
	Min Mxy	SRV 3/ 30	1727.5	0.0	5.2	-0.1	197.0	0.1	197.0	0.1	197.0
	Min Mxz	SRV 3/ 1	1718.7	0.0	1.5	-0.1	265.5	0.1	265.5	0.1	265.5
	Min Myz	SRV 3/ 30	1727.5	0.0	5.2	-0.1	197.0	0.1	197.0	0.1	197.0
	Max Fx	SRV 3/ 7	-1427.3	0.0	17.9	0.1	14.8	0.0	14.8	0.1	14.8
	Max Fy	SRV 3/ 5	-1609.5	2.6	18.7	-27.6	3.9	-31.0	27.9	41.5	31.2
	Max Fz	SRV 3/ 4	-1750.4	0.0	19.5	0.1	-4.8	0.0	4.8	0.1	4.8
	Max Mx	SRV 3/ 8	-1448.0	-0.1	18.0	1.7	13.7	0.7	13.8	1.8	13.8
	Max My	SRV 3/ 7	-1427.3	0.0	17.9	0.1	14.8	0.0	14.8	0.1	14.8
Load No.	Max Mz	SRV 3/ 8	-1448.0	-0.1	18.0	1.7	13.7	0.7	13.8	1.8	13.8
4	Max Mxy	SRV 3/ 51	-2228.1	0.0	15.6	0.1	-76.5	0.0	76.5	0.1	76.5
	Max Mxz	SRV 3/ 5	-1609.5	2.6	18.7	-27.6	3.9	-31.0	27.9	41.5	31.2
Member	Max Myz	SRV 3/ 51	-2228.1	0.0	15.6	0.1	-76.5	0.0	76.5	0.1	76.5
705	Min Fx	SRV 3/ 49	-2470.7	0.0	19.2	0.1	-42.2	0.0	42.2	0.1	42.2
	Min Fy	SRV 3/ 8	-1448.0	-0.1	18.0	1.7	13.7	0.7	13.8	1.8	13.8
Joint	Min Fz	SRV 3/ 39	-2052.0	0.0	15.3	0.1	-66.6	0.0	66.6	0.1	66.6
704	Min Mx	SRV 3/ 5	-1609.5	2.6	18.7	-27.6	3.9	-31.0	27.9	41.5	31.2
	Min My	SRV 3/ 51	-2228.1	0.0	15.6	0.1	-76.5	0.0	76.5	0.1	76.5
	Min Mz	SRV 3/ 5	-1609.5	2.6	18.7	-27.6	3.9	-31.0	27.9	41.5	31.2
	Min Mxy	SRV 3/ 1	-1709.2	0.0	19.4	0.1	-2.7	0.0	2.7	0.1	2.7
	Min Mxz	SRV 3/ 1	-1709.2	0.0	19.4	0.1	-2.7	0.0	2.7	0.1	2.7
	Min Myz	SRV 3/ 1	-1709.2	0.0	19.4	0.1	-2.7	0.0	2.7	0.1	2.7

AASHTO Limit State: SRV 3 - SERVICE III

	Max/ Min ID	Combo ID	Fx (kips)	Fy (kips)	Fz (kips)	Mx (ft*kip)	My (ft*kip)	Mz (ft*kip)	Mxy (ft*kip)	Mxz (ft*kip)	Myz (ft*kip)
	Max Fx	SRV 3/ 7	-475.6	0.0	-8.5	0.0	63.4	0.0	63.4	0.0	63.4
	Max Fy	SRV 3/ 8	-481.7	0.4	-8.9	-0.5	66.2	3.9	66.2	4.0	66.3
	Max Fz	SRV 3/ 3	-489.7	0.0	-5.9	0.0	60.8	0.1	60.8	0.1	60.8
	Max Mx	SRV 3/ 5	-543.6	-3.2	-10.5	2.3	79.6	-13.2	79.6	13.4	80.6
	Max My	SRV 3/ 49	-692.9	0.0	-25.5	0.0	179.7	0.2	179.7	0.2	179.7
Load No.	Max Mz	SRV 3/ 8	-481.7	0.4	-8.9	-0.5	66.2	3.9	66.2	4.0	66.3
5	Max Mxy	SRV 3/ 49	-692.9	0.0	-25.5	0.0	179.7	0.2	179.7	0.2	179.7
	Max Mxz	SRV 3/ 5	-543.6	-3.2	-10.5	2.3	79.6	-13.2	79.6	13.4	80.6
Member	Max Myz	SRV 3/ 49	-692.9	0.0	-25.5	0.0	179.7	0.2	179.7	0.2	179.7
708	Min Fx	SRV 3/ 49	-692.9	0.0	-25.5	0.0	179.7	0.2	179.7	0.2	179.7
	Min Fy	SRV 3/ 5	-543.6	-3.2	-10.5	2.3	79.6	-13.2	79.6	13.4	80.6
Joint	Min Fz	SRV 3/ 49	-692.9	0.0	-25.5	0.0	179.7	0.2	179.7	0.2	179.7
705	Min Mx	SRV 3/ 8	-481.7	0.4	-8.9	-0.5	66.2	3.9	66.2	4.0	66.3
	Min My	SRV 3/ 3	-489.7	0.0	-5.9	0.0	60.8	0.1	60.8	0.1	60.8
	Min Mz	SRV 3/ 5	-543.6	-3.2	-10.5	2.3	79.6	-13.2	79.6	13.4	80.6
	Min Mxy	SRV 3/ 3	-489.7	0.0	-5.9	0.0	60.8	0.1	60.8	0.1	60.8
	Min Mxz	SRV 3/ 7	-475.6	0.0	-8.5	0.0	63.4	0.0	63.4	0.0	63.4
	Min Myz	SRV 3/ 3	-489.7	0.0	-5.9	0.0	60.8	0.1	60.8	0.1	60.8
	Max Fx	SRV 3/ 49	698.4	0.0	27.2	0.0	109.5	0.0	109.5	0.0	109.5
	Max Fy	SRV 3/ 5	549.1	3.2	12.2	-2.3	45.2	-22.1	45.3	22.2	50.3
	Max Fz	SRV 3/ 49	698.4	0.0	27.2	0.0	109.5	0.0	109.5	0.0	109.5
	Max Mx	SRV 3/ 8	487.2	-0.4	10.6	0.5	41.5	0.6	41.5	0.7	41.5
	Max My	SRV 3/ 49	698.4	0.0	27.2	0.0	109.5	0.0	109.5	0.0	109.5
Load No.	Max Mz	SRV 3/ 8	487.2	-0.4	10.6	0.5	41.5	0.6	41.5	0.7	41.5
6	Max Mxy	SRV 3/ 49	698.4	0.0	27.2	0.0	109.5	0.0	109.5	0.0	109.5
	Max Mxz	SRV 3/ 5	549.1	3.2	12.2	-2.3	45.2	-22.1	45.3	22.2	50.3
Member	Max Myz	SRV 3/ 50	642.7	3.2	26.1	-2.3	107.3	-22.1	107.4	22.2	109.6
708	Min Fx	SRV 3/ 7	481.1	0.0	10.2	0.0	40.0	0.0	40.0	0.0	40.0
	Min Fy	SRV 3/ 8	487.2	-0.4	10.6	0.5	41.5	0.6	41.5	0.7	41.5
Joint	Min Fz	SRV 3/ 3	495.2	0.0	7.6	0.0	13.2	0.0	13.2	0.0	13.2
706	Min Mx	SRV 3/ 5	549.1	3.2	12.2	-2.3	45.2	-22.1	45.3	22.2	50.3
	Min My	SRV 3/ 3	495.2	0.0	7.6	0.0	13.2	0.0	13.2	0.0	13.2
	Min Mz	SRV 3/ 5	549.1	3.2	12.2	-2.3	45.2	-22.1	45.3	22.2	50.3
	Min Mxy	SRV 3/ 3	495.2	0.0	7.6	0.0	13.2	0.0	13.2	0.0	13.2
	Min Mxz	SRV 3/ 1	592.7	0.0	12.5	0.0	44.4	0.0	44.4	0.0	44.4
	Min Myz	SRV 3/ 3	495.2	0.0	7.6	0.0	13.2	0.0	13.2	0.0	13.2

AASHTO Limit State: SRV 3 - SERVICE III

	Max/ Min ID	Combo ID	Fx (kips)	Fy (kips)	Fz (kips)	Mx (ft*kip)	My (ft*kip)	Mz (ft*kip)	Mxy (ft*kip)	Mxz (ft*kip)	Myz (ft*kip)
	Max Fx	SRV 3/ 49	762.8	0.0	2.9	0.0	77.2	0.1	77.2	0.1	77.2
	Max Fy	SRV 3/ 8	431.1	0.1	3.9	-0.5	48.4	0.9	48.4	1.0	48.4
	Max Fz	SRV 3/ 7	418.2	0.0	3.9	0.0	48.0	0.1	48.0	0.1	48.0
	Max Mx	SRV 3/ 1	492.9	0.0	3.7	0.0	55.0	0.1	55.0	0.1	55.0
	Max My	SRV 3/ 49	762.8	0.0	2.9	0.0	77.2	0.1	77.2	0.1	77.2
Load No.	Max Mz	SRV 3/ 8	431.1	0.1	3.9	-0.5	48.4	0.9	48.4	1.0	48.4
7	Max Mxy	SRV 3/ 49	762.8	0.0	2.9	0.0	77.2	0.1	77.2	0.1	77.2
	Max Mxz	SRV 3/ 2	468.5	-0.4	3.8	-5.0	51.9	0.3	52.2	5.0	51.9
Member	Max Myz	SRV 3/ 49	762.8	0.0	2.9	0.0	77.2	0.1	77.2	0.1	77.2
711	Min Fx	SRV 3/ 7	418.2	0.0	3.9	0.0	48.0	0.1	48.0	0.1	48.0
	Min Fy	SRV 3/ 5	481.5	-0.5	3.8	-4.5	52.4	-0.6	52.6	4.5	52.4
Joint	Min Fz	SRV 3/ 49	762.8	0.0	2.9	0.0	77.2	0.1	77.2	0.1	77.2
707	Min Mx	SRV 3/ 2	468.5	-0.4	3.8	-5.0	51.9	0.3	52.2	5.0	51.9
	Min My	SRV 3/ 7	418.2	0.0	3.9	0.0	48.0	0.1	48.0	0.1	48.0
	Min Mz	SRV 3/ 5	481.5	-0.5	3.8	-4.5	52.4	-0.6	52.6	4.5	52.4
	Min Mxy	SRV 3/ 7	418.2	0.0	3.9	0.0	48.0	0.1	48.0	0.1	48.0
	Min Mxz	SRV 3/ 1	492.9	0.0	3.7	0.0	55.0	0.1	55.0	0.1	55.0
	Min Myz	SRV 3/ 7	418.2	0.0	3.9	0.0	48.0	0.1	48.0	0.1	48.0
	Max Fx	SRV 3/ 7	-411.9	0.0	8.6	0.0	14.3	0.0	14.3	0.0	14.3
	Max Fy	SRV 3/ 5	-475.2	0.5	8.7	4.5	13.6	-12.1	14.3	12.9	18.2
	Max Fz	SRV 3/ 49	-756.5	0.0	9.6	0.0	11.5	0.0	11.5	0.0	11.5
	Max Mx	SRV 3/ 2	-462.2	0.4	8.7	5.0	13.7	-11.7	14.6	12.7	18.0
	Max My	SRV 3/ 3	-438.6	0.0	8.8	0.0	17.1	0.0	17.1	0.0	17.1
Load No.	Max Mz	SRV 3/ 8	-424.8	-0.1	8.6	0.5	14.2	0.3	14.2	0.6	14.2
8	Max Mxy	SRV 3/ 3	-438.6	0.0	8.8	0.0	17.1	0.0	17.1	0.0	17.1
	Max Mxz	SRV 3/ 5	-475.2	0.5	8.7	4.5	13.6	-12.1	14.3	12.9	18.2
Member	Max Myz	SRV 3/ 5	-475.2	0.5	8.7	4.5	13.6	-12.1	14.3	12.9	18.2
711	Min Fx	SRV 3/ 49	-756.5	0.0	9.6	0.0	11.5	0.0	11.5	0.0	11.5
	Min Fy	SRV 3/ 8	-424.8	-0.1	8.6	0.5	14.2	0.3	14.2	0.6	14.2
Joint	Min Fz	SRV 3/ 7	-411.9	0.0	8.6	0.0	14.3	0.0	14.3	0.0	14.3
708	Min Mx	SRV 3/ 1	-486.6	0.0	8.8	0.0	13.3	0.0	13.3	0.0	13.3
	Min My	SRV 3/ 31	-547.2	0.0	9.1	0.0	11.5	0.0	11.5	0.0	11.5
	Min Mz	SRV 3/ 5	-475.2	0.5	8.7	4.5	13.6	-12.1	14.3	12.9	18.2
	Min Mxy	SRV 3/ 31	-547.2	0.0	9.1	0.0	11.5	0.0	11.5	0.0	11.5
	Min Mxz	SRV 3/ 1	-486.6	0.0	8.8	0.0	13.3	0.0	13.3	0.0	13.3
	Min Myz	SRV 3/ 31	-547.2	0.0	9.1	0.0	11.5	0.0	11.5	0.0	11.5

AASHTO Limit State: SRV 3 - SERVICE III

	Max/ Min ID	Combo ID	Fx (kips)	Fy (kips)	Fz (kips)	Mx (ft*kip)	My (ft*kip)	Mz (ft*kip)	Mxy (ft*kip)	Mxz (ft*kip)	Myz (ft*kip)
	Max Fx	SRV 3/ 34	-99.2	0.0	11.8	0.0	-85.8	0.0	85.8	0.0	85.8
	Max Fy	SRV 3/ 2	-148.6	5.6	10.5	3.3	-77.4	70.3	77.5	70.4	104.6
	Max Fz	SRV 3/ 34	-99.2	0.0	11.8	0.0	-85.8	0.0	85.8	0.0	85.8
	Max Mx	SRV 3/ 5	-152.3	5.3	10.1	3.4	-75.2	67.2	75.2	67.3	100.8
	Max My	SRV 3/ 22	-187.3	0.0	5.8	0.0	-52.0	0.0	52.0	0.0	52.0
Load No.	Max Mz	SRV 3/ 2	-148.6	5.6	10.5	3.3	-77.4	70.3	77.5	70.4	104.6
9	Max Mxy	SRV 3/ 34	-99.2	0.0	11.8	0.0	-85.8	0.0	85.8	0.0	85.8
	Max Mxz	SRV 3/ 2	-148.6	5.6	10.5	3.3	-77.4	70.3	77.5	70.4	104.6
Member	Max Myz	SRV 3/ 29	-126.3	5.6	11.2	3.3	-82.2	70.3	82.3	70.4	108.2
714	Min Fx	SRV 3/ 13	-191.6	0.0	6.8	0.0	-57.2	0.0	57.2	0.0	57.2
	Min Fy	SRV 3/ 1	-168.5	0.0	10.6	0.0	-78.2	0.0	78.2	0.0	78.2
Joint	Min Fz	SRV 3/ 22	-187.3	0.0	5.8	0.0	-52.0	0.0	52.0	0.0	52.0
709	Min Mx	SRV 3/ 8	-125.1	0.3	10.7	-0.2	-78.8	3.1	78.8	3.1	78.8
	Min My	SRV 3/ 34	-99.2	0.0	11.8	0.0	-85.8	0.0	85.8	0.0	85.8
	Min Mz	SRV 3/ 1	-168.5	0.0	10.6	0.0	-78.2	0.0	78.2	0.0	78.2
	Min Mxy	SRV 3/ 22	-187.3	0.0	5.8	0.0	-52.0	0.0	52.0	0.0	52.0
	Min Mxz	SRV 3/ 1	-168.5	0.0	10.6	0.0	-78.2	0.0	78.2	0.0	78.2
	Min Myz	SRV 3/ 22	-187.3	0.0	5.8	0.0	-52.0	0.0	52.0	0.0	52.0
	Max Fx	SRV 3/ 13	197.8	0.0	-6.7	0.0	-23.8	0.0	23.8	0.0	23.8
	Max Fy	SRV 3/ 1	174.7	0.0	-10.5	0.0	-46.4	0.0	46.4	0.0	46.4
	Max Fz	SRV 3/ 22	193.5	0.0	-5.7	0.0	-16.8	0.0	16.8	0.0	16.8
	Max Mx	SRV 3/ 8	131.3	-0.3	-10.6	0.2	-48.4	0.5	48.4	0.5	48.4
	Max My	SRV 3/ 24	145.5	0.0	-5.7	0.0	-15.4	0.0	15.4	0.0	15.4
Load No.	Max Mz	SRV 3/ 8	131.3	-0.3	-10.6	0.2	-48.4	0.5	48.4	0.5	48.4
10	Max Mxy	SRV 3/ 34	105.4	0.0	-11.7	0.0	-53.8	0.0	53.8	0.0	53.8
	Max Mxz	SRV 3/ 5	158.5	-5.3	-10.0	-3.4	-44.4	-4.7	44.5	5.8	44.7
Member	Max Myz	SRV 3/ 34	105.4	0.0	-11.7	0.0	-53.8	0.0	53.8	0.0	53.8
714	Min Fx	SRV 3/ 34	105.4	0.0	-11.7	0.0	-53.8	0.0	53.8	0.0	53.8
	Min Fy	SRV 3/ 2	154.8	-5.6	-10.4	-3.3	-46.4	-4.2	46.5	5.4	46.6
Joint	Min Fz	SRV 3/ 34	105.4	0.0	-11.7	0.0	-53.8	0.0	53.8	0.0	53.8
710	Min Mx	SRV 3/ 5	158.5	-5.3	-10.0	-3.4	-44.4	-4.7	44.5	5.8	44.7
	Min My	SRV 3/ 34	105.4	0.0	-11.7	0.0	-53.8	0.0	53.8	0.0	53.8
	Min Mz	SRV 3/ 5	158.5	-5.3	-10.0	-3.4	-44.4	-4.7	44.5	5.8	44.7
	Min Mxy	SRV 3/ 24	145.5	0.0	-5.7	0.0	-15.4	0.0	15.4	0.0	15.4
	Min Mxz	SRV 3/ 1	174.7	0.0	-10.5	0.0	-46.4	0.0	46.4	0.0	46.4
	Min Myz	SRV 3/ 24	145.5	0.0	-5.7	0.0	-15.4	0.0	15.4	0.0	15.4

AASHTO Limit State: SRV 3 - SERVICE III

	Max/ Min ID	Combo ID	Fx (kips)	Fy (kips)	Fz (kips)	Mx (ft*kip)	My (ft*kip)	Mz (ft*kip)	Mxy (ft*kip)	Mxz (ft*kip)	Myz (ft*kip)
	Max Fx	SRV 3/ 18	-224.3	0.0	2.5	0.0	49.3	0.0	49.3	0.0	49.3
	Max Fy	SRV 3/ 2	-286.5	0.6	2.6	-15.2	47.6	21.4	49.9	26.3	52.2
	Max Fz	SRV 3/ 3	-262.2	0.0	2.8	0.0	44.6	0.0	44.6	0.0	44.6
	Max Mx	SRV 3/ 1	-315.5	0.0	2.5	0.0	50.1	0.0	50.1	0.0	50.1
	Max My	SRV 3/ 49	-322.7	0.0	2.3	0.0	57.5	0.0	57.5	0.0	57.5
Load No.	Max Mz	SRV 3/ 2	-286.5	0.6	2.6	-15.2	47.6	21.4	49.9	26.3	52.2
11	Max Mxy	SRV 3/ 49	-322.7	0.0	2.3	0.0	57.5	0.0	57.5	0.0	57.5
	Max Mxz	SRV 3/ 2	-286.5	0.6	2.6	-15.2	47.6	21.4	49.9	26.3	52.2
Member	Max Myz	SRV 3/ 50	-301.3	0.6	2.4	-14.9	54.5	20.7	56.5	25.5	58.3
717	Min Fx	SRV 3/ 28	-365.5	0.0	2.5	0.0	50.5	0.0	50.5	0.0	50.5
	Min Fy	SRV 3/ 1	-315.5	0.0	2.5	0.0	50.1	0.0	50.1	0.0	50.1
Joint	Min Fz	SRV 3/ 13	-265.7	0.0	2.3	0.0	55.4	0.0	55.4	0.0	55.4
711	Min Mx	SRV 3/ 2	-286.5	0.6	2.6	-15.2	47.6	21.4	49.9	26.3	52.2
	Min My	SRV 3/ 7	-272.7	0.0	2.7	0.0	44.1	0.0	44.1	0.0	44.1
	Min Mz	SRV 3/ 1	-315.5	0.0	2.5	0.0	50.1	0.0	50.1	0.0	50.1
	Min Mxy	SRV 3/ 7	-272.7	0.0	2.7	0.0	44.1	0.0	44.1	0.0	44.1
	Min Mxz	SRV 3/ 1	-315.5	0.0	2.5	0.0	50.1	0.0	50.1	0.0	50.1
	Min Myz	SRV 3/ 7	-272.7	0.0	2.7	0.0	44.1	0.0	44.1	0.0	44.1
	Max Fx	SRV 3/ 28	371.8	0.0	8.3	0.0	19.0	0.0	19.0	0.0	19.0
	Max Fy	SRV 3/ 1	321.8	0.0	8.3	0.0	19.5	0.0	19.5	0.0	19.5
	Max Fz	SRV 3/ 13	272.0	0.0	8.5	0.0	17.3	0.0	17.3	0.0	17.3
	Max Mx	SRV 3/ 2	292.8	-0.6	8.2	15.2	19.9	-7.1	25.0	16.8	21.1
	Max My	SRV 3/ 7	279.0	0.0	8.1	0.0	20.7	0.0	20.7	0.0	20.7
Load No.	Max Mz	SRV 3/ 8	271.4	-0.1	8.1	0.3	20.5	0.6	20.5	0.7	20.5
12	Max Mxy	SRV 3/ 2	292.8	-0.6	8.2	15.2	19.9	-7.1	25.0	16.8	21.1
	Max Mxz	SRV 3/ 2	292.8	-0.6	8.2	15.2	19.9	-7.1	25.0	16.8	21.1
Member	Max Myz	SRV 3/ 5	285.2	-0.6	8.2	14.9	19.7	-7.8	24.7	16.8	21.2
717	Min Fx	SRV 3/ 18	230.6	0.0	8.3	0.0	18.6	0.0	18.6	0.0	18.6
	Min Fy	SRV 3/ 2	292.8	-0.6	8.2	15.2	19.9	-7.1	25.0	16.8	21.1
Joint	Min Fz	SRV 3/ 3	268.5	0.0	8.0	0.0	19.4	0.0	19.4	0.0	19.4
712	Min Mx	SRV 3/ 1	321.8	0.0	8.3	0.0	19.5	0.0	19.5	0.0	19.5
	Min My	SRV 3/ 49	329.0	0.0	8.5	0.0	16.3	0.0	16.3	0.0	16.3
	Min Mz	SRV 3/ 5	285.2	-0.6	8.2	14.9	19.7	-7.8	24.7	16.8	21.2
	Min Mxy	SRV 3/ 49	329.0	0.0	8.5	0.0	16.3	0.0	16.3	0.0	16.3
	Min Mxz	SRV 3/ 1	321.8	0.0	8.3	0.0	19.5	0.0	19.5	0.0	19.5
	Min Myz	SRV 3/ 49	329.0	0.0	8.5	0.0	16.3	0.0	16.3	0.0	16.3

AASHTO Limit State: SRV 3 - SERVICE III

	Max/ Min ID	Combo ID	Fx (kips)	Fy (kips)	Fz (kips)	Mx (ft*kip)	My (ft*kip)	Mz (ft*kip)	Mxy (ft*kip)	Mxz (ft*kip)	Myz (ft*kip)
	Max Fx	SRV 3/ 48	298.6	0.0	-24.5	0.0	184.6	0.0	184.6	0.0	184.6
	Max Fy	SRV 3/ 1	204.3	0.0	-25.5	0.0	188.7	0.0	188.7	0.0	188.7
	Max Fz	SRV 3/ 9	198.6	0.0	-22.9	0.0	171.0	0.0	171.0	0.0	171.0
	Max Mx	SRV 3/ 2	201.4	-7.6	-24.2	16.3	179.9	-89.4	180.6	90.9	200.9
	Max My	SRV 3/ 46	296.8	0.0	-26.8	0.0	200.6	0.0	200.6	0.0	200.6
Load No.	Max Mz	SRV 3/ 1	204.3	0.0	-25.5	0.0	188.7	0.0	188.7	0.0	188.7
13	Max Mxy	SRV 3/ 46	296.8	0.0	-26.8	0.0	200.6	0.0	200.6	0.0	200.6
	Max Mxz	SRV 3/ 2	201.4	-7.6	-24.2	16.3	179.9	-89.4	180.6	90.9	200.9
Member	Max Myz	SRV 3/ 47	293.9	-7.6	-25.5	16.3	191.8	-89.4	192.5	90.9	211.6
720	Min Fx	SRV 3/ 9	198.6	0.0	-22.9	0.0	171.0	0.0	171.0	0.0	171.0
	Min Fy	SRV 3/ 2	201.4	-7.6	-24.2	16.3	179.9	-89.4	180.6	90.9	200.9
Joint	Min Fz	SRV 3/ 46	296.8	0.0	-26.8	0.0	200.6	0.0	200.6	0.0	200.6
713	Min Mx	SRV 3/ 1	204.3	0.0	-25.5	0.0	188.7	0.0	188.7	0.0	188.7
	Min My	SRV 3/ 9	198.6	0.0	-22.9	0.0	171.0	0.0	171.0	0.0	171.0
	Min Mz	SRV 3/ 2	201.4	-7.6	-24.2	16.3	179.9	-89.4	180.6	90.9	200.9
	Min Mxy	SRV 3/ 9	198.6	0.0	-22.9	0.0	171.0	0.0	171.0	0.0	171.0
	Min Mxz	SRV 3/ 1	204.3	0.0	-25.5	0.0	188.7	0.0	188.7	0.0	188.7
	Min Myz	SRV 3/ 9	198.6	0.0	-22.9	0.0	171.0	0.0	171.0	0.0	171.0
	Max Fx	SRV 3/ 9	-192.1	0.0	25.4	0.0	149.8	0.0	149.8	0.0	149.8
	Max Fy	SRV 3/ 2	-194.9	7.6	26.7	-16.3	158.1	-11.9	158.9	20.2	158.5
	Max Fz	SRV 3/ 46	-290.3	0.0	29.3	0.0	173.6	0.0	173.6	0.0	173.6
	Max Mx	SRV 3/ 1	-197.8	0.0	28.0	0.0	166.4	0.0	166.4	0.0	166.4
	Max My	SRV 3/ 46	-290.3	0.0	29.3	0.0	173.6	0.0	173.6	0.0	173.6
Load No.	Max Mz	SRV 3/ 1	-197.8	0.0	28.0	0.0	166.4	0.0	166.4	0.0	166.4
14	Max Mxy	SRV 3/ 46	-290.3	0.0	29.3	0.0	173.6	0.0	173.6	0.0	173.6
	Max Mxz	SRV 3/ 2	-194.9	7.6	26.7	-16.3	158.1	-11.9	158.9	20.2	158.5
Member	Max Myz	SRV 3/ 46	-290.3	0.0	29.3	0.0	173.6	0.0	173.6	0.0	173.6
720	Min Fx	SRV 3/ 48	-292.1	0.0	27.0	0.0	159.1	0.0	159.1	0.0	159.1
	Min Fy	SRV 3/ 1	-197.8	0.0	28.0	0.0	166.4	0.0	166.4	0.0	166.4
Joint	Min Fz	SRV 3/ 9	-192.1	0.0	25.4	0.0	149.8	0.0	149.8	0.0	149.8
714	Min Mx	SRV 3/ 2	-194.9	7.6	26.7	-16.3	158.1	-11.9	158.9	20.2	158.5
	Min My	SRV 3/ 18	-221.9	0.0	25.4	0.0	149.6	0.0	149.6	0.0	149.6
	Min Mz	SRV 3/ 2	-194.9	7.6	26.7	-16.3	158.1	-11.9	158.9	20.2	158.5
	Min Mxy	SRV 3/ 18	-221.9	0.0	25.4	0.0	149.6	0.0	149.6	0.0	149.6
	Min Mxz	SRV 3/ 1	-197.8	0.0	28.0	0.0	166.4	0.0	166.4	0.0	166.4
	Min Myz	SRV 3/ 18	-221.9	0.0	25.4	0.0	149.6	0.0	149.6	0.0	149.6

AASHTO Limit State: SRV 3 - SERVICE III

	Max/ Min ID	Combo ID	Fx (kips)	Fy (kips)	Fz (kips)	Mx (ft*kip)	My (ft*kip)	Mz (ft*kip)	Mxy (ft*kip)	Mxz (ft*kip)	Myz (ft*kip)
	Max Fx	SRV 3/ 9	-791.7	0.0	-0.5	0.0	46.3	0.0	46.3	0.0	46.3
	Max Fy	SRV 3/ 2	-859.4	2.3	-0.7	-18.7	48.6	44.8	52.1	48.6	66.1
	Max Fz	SRV 3/ 30	-853.2	0.0	-0.2	0.0	43.2	0.0	43.2	0.0	43.2
	Max Mx	SRV 3/ 1	-927.3	0.0	-0.8	0.0	50.9	0.0	50.9	0.0	50.9
	Max My	SRV 3/ 13	-979.4	0.0	-1.3	0.0	56.3	0.0	56.3	0.0	56.3
Load No.	Max Mz	SRV 3/ 2	-859.4	2.3	-0.7	-18.7	48.6	44.8	52.1	48.6	66.1
15	Max Mxy	SRV 3/ 14	-913.2	2.2	-1.1	-18.6	53.8	43.9	56.9	47.7	69.4
	Max Mxz	SRV 3/ 2	-859.4	2.3	-0.7	-18.7	48.6	44.8	52.1	48.6	66.1
Member	Max Myz	SRV 3/ 11	-914.8	2.3	-1.1	-18.7	53.4	44.8	56.6	48.6	69.7
723	Min Fx	SRV 3/ 46	-1080.6	0.0	-0.9	0.0	52.0	0.0	52.0	0.0	52.0
	Min Fy	SRV 3/ 1	-927.3	0.0	-0.8	0.0	50.9	0.0	50.9	0.0	50.9
Joint	Min Fz	SRV 3/ 13	-979.4	0.0	-1.3	0.0	56.3	0.0	56.3	0.0	56.3
715	Min Mx	SRV 3/ 2	-859.4	2.3	-0.7	-18.7	48.6	44.8	52.1	48.6	66.1
	Min My	SRV 3/ 34	-844.7	0.0	-0.2	0.0	42.4	0.0	42.4	0.0	42.4
	Min Mz	SRV 3/ 1	-927.3	0.0	-0.8	0.0	50.9	0.0	50.9	0.0	50.9
	Min Mxy	SRV 3/ 34	-844.7	0.0	-0.2	0.0	42.4	0.0	42.4	0.0	42.4
	Min Mxz	SRV 3/ 1	-927.3	0.0	-0.8	0.0	50.9	0.0	50.9	0.0	50.9
	Min Myz	SRV 3/ 34	-844.7	0.0	-0.2	0.0	42.4	0.0	42.4	0.0	42.4
	Max Fx	SRV 3/ 46	1087.0	0.0	9.3	0.0	52.4	0.0	52.4	0.0	52.4
	Max Fy	SRV 3/ 1	933.7	0.0	9.2	0.0	52.1	0.0	52.1	0.0	52.1
	Max Fz	SRV 3/ 13	985.8	0.0	9.7	0.0	54.4	0.0	54.4	0.0	54.4
	Max Mx	SRV 3/ 2	865.8	-2.3	9.1	18.7	50.9	1.7	54.3	18.8	50.9
	Max My	SRV 3/ 19	1037.1	0.0	9.6	0.0	54.9	0.0	54.9	0.0	54.9
Load No.	Max Mz	SRV 3/ 2	865.8	-2.3	9.1	18.7	50.9	1.7	54.3	18.8	50.9
16	Max Mxy	SRV 3/ 20	969.2	-2.3	9.5	18.7	53.7	1.7	56.9	18.8	53.7
	Max Mxz	SRV 3/ 2	865.8	-2.3	9.1	18.7	50.9	1.7	54.3	18.8	50.9
Member	Max Myz	SRV 3/ 19	1037.1	0.0	9.6	0.0	54.9	0.0	54.9	0.0	54.9
723	Min Fx	SRV 3/ 9	798.1	0.0	8.9	0.0	49.8	0.0	49.8	0.0	49.8
	Min Fy	SRV 3/ 2	865.8	-2.3	9.1	18.7	50.9	1.7	54.3	18.8	50.9
Joint	Min Fz	SRV 3/ 30	859.6	0.0	8.6	0.0	47.5	0.0	47.5	0.0	47.5
716	Min Mx	SRV 3/ 1	933.7	0.0	9.2	0.0	52.1	0.0	52.1	0.0	52.1
	Min My	SRV 3/ 36	848.0	0.0	8.6	0.0	47.3	0.0	47.3	0.0	47.3
	Min Mz	SRV 3/ 1	933.7	0.0	9.2	0.0	52.1	0.0	52.1	0.0	52.1
	Min Mxy	SRV 3/ 36	848.0	0.0	8.6	0.0	47.3	0.0	47.3	0.0	47.3
	Min Mxz	SRV 3/ 1	933.7	0.0	9.2	0.0	52.1	0.0	52.1	0.0	52.1
	Min Myz	SRV 3/ 36	848.0	0.0	8.6	0.0	47.3	0.0	47.3	0.0	47.3

AASHTO Limit State: SRV 3 - SERVICE III

	Max/ Min ID	Combo ID	Fx (kips)	Fy (kips)	Fz (kips)	Mx (ft*kip)	My (ft*kip)	Mz (ft*kip)	Mxy (ft*kip)	Mxz (ft*kip)	Myz (ft*kip)
	Max Fx	SRV 3/ 49	932.1	0.0	-15.9	0.0	190.9	0.0	190.9	0.0	190.9
	Max Fy	SRV 3/ 1	735.0	0.0	-13.7	0.0	163.5	0.0	163.5	0.0	163.5
	Max Fz	SRV 3/ 7	663.1	0.0	-12.0	0.0	146.1	0.0	146.1	0.0	146.1
	Max Mx	SRV 3/ 2	702.5	-3.8	-12.9	17.0	155.2	-46.1	156.1	49.1	161.9
	Max My	SRV 3/ 22	922.8	0.0	-15.9	0.0	193.3	0.0	193.3	0.0	193.3
Load No.	Max Mz	SRV 3/ 1	735.0	0.0	-13.7	0.0	163.5	0.0	163.5	0.0	163.5
17	Max Mxy	SRV 3/ 22	922.8	0.0	-15.9	0.0	193.3	0.0	193.3	0.0	193.3
	Max Mxz	SRV 3/ 2	702.5	-3.8	-12.9	17.0	155.2	-46.1	156.1	49.1	161.9
Member	Max Myz	SRV 3/ 22	922.8	0.0	-15.9	0.0	193.3	0.0	193.3	0.0	193.3
726	Min Fx	SRV 3/ 7	663.1	0.0	-12.0	0.0	146.1	0.0	146.1	0.0	146.1
	Min Fy	SRV 3/ 2	702.5	-3.8	-12.9	17.0	155.2	-46.1	156.1	49.1	161.9
Joint	Min Fz	SRV 3/ 19	916.0	0.0	-15.9	0.0	192.5	0.0	192.5	0.0	192.5
717	Min Mx	SRV 3/ 1	735.0	0.0	-13.7	0.0	163.5	0.0	163.5	0.0	163.5
	Min My	SRV 3/ 34	672.4	0.0	-12.0	0.0	143.7	0.0	143.7	0.0	143.7
	Min Mz	SRV 3/ 2	702.5	-3.8	-12.9	17.0	155.2	-46.1	156.1	49.1	161.9
	Min Mxy	SRV 3/ 34	672.4	0.0	-12.0	0.0	143.7	0.0	143.7	0.0	143.7
	Min Mxz	SRV 3/ 1	735.0	0.0	-13.7	0.0	163.5	0.0	163.5	0.0	163.5
	Min Myz	SRV 3/ 34	672.4	0.0	-12.0	0.0	143.7	0.0	143.7	0.0	143.7
	Max Fx	SRV 3/ 7	-656.7	0.0	17.9	0.0	102.2	0.0	102.2	0.0	102.2
	Max Fy	SRV 3/ 2	-696.1	3.8	18.8	-17.0	107.7	-16.8	109.0	23.9	109.0
	Max Fz	SRV 3/ 19	-909.6	0.0	21.8	0.0	119.7	0.0	119.7	0.0	119.7
	Max Mx	SRV 3/ 1	-728.6	0.0	19.6	0.0	113.4	0.0	113.4	0.0	113.4
	Max My	SRV 3/ 46	-918.9	0.0	21.8	0.0	121.5	0.0	121.5	0.0	121.5
Load No.	Max Mz	SRV 3/ 1	-728.6	0.0	19.6	0.0	113.4	0.0	113.4	0.0	113.4
18	Max Mxy	SRV 3/ 46	-918.9	0.0	21.8	0.0	121.5	0.0	121.5	0.0	121.5
	Max Mxz	SRV 3/ 2	-696.1	3.8	18.8	-17.0	107.7	-16.8	109.0	23.9	109.0
Member	Max Myz	SRV 3/ 46	-918.9	0.0	21.8	0.0	121.5	0.0	121.5	0.0	121.5
726	Min Fx	SRV 3/ 49	-925.7	0.0	21.8	0.0	121.2	0.0	121.2	0.0	121.2
	Min Fy	SRV 3/ 1	-728.6	0.0	19.6	0.0	113.4	0.0	113.4	0.0	113.4
Joint	Min Fz	SRV 3/ 7	-656.7	0.0	17.9	0.0	102.2	0.0	102.2	0.0	102.2
718	Min Mx	SRV 3/ 2	-696.1	3.8	18.8	-17.0	107.7	-16.8	109.0	23.9	109.0
	Min My	SRV 3/ 9	-662.5	0.0	17.9	0.0	102.0	0.0	102.0	0.0	102.0
	Min Mz	SRV 3/ 2	-696.1	3.8	18.8	-17.0	107.7	-16.8	109.0	23.9	109.0
	Min Mxy	SRV 3/ 9	-662.5	0.0	17.9	0.0	102.0	0.0	102.0	0.0	102.0
	Min Mxz	SRV 3/ 1	-728.6	0.0	19.6	0.0	113.4	0.0	113.4	0.0	113.4
	Min Myz	SRV 3/ 9	-662.5	0.0	17.9	0.0	102.0	0.0	102.0	0.0	102.0

AASHTO Limit State: SRV 3 - SERVICE III

	Max/ Min ID	Combo ID	Fx (kips)	Fy (kips)	Fz (kips)	Mx (ft*kip)	My (ft*kip)	Mz (ft*kip)	Mxy (ft*kip)	Mxz (ft*kip)	Myz (ft*kip)
	Max Fx	SRV 3/ 7	-980.7	0.0	4.5	0.0	-38.4	0.0	38.4	0.0	38.4
	Max Fy	SRV 3/ 2	-1067.7	5.0	5.0	-13.9	-43.2	67.6	45.4	69.0	80.2
	Max Fz	SRV 3/ 22	-1304.1	0.0	9.5	0.0	-88.7	0.0	88.7	0.0	88.7
	Max Mx	SRV 3/ 1	-1148.1	0.0	5.4	0.0	-47.0	0.0	47.0	0.0	47.0
	Max My	SRV 3/ 34	-993.9	0.0	4.2	0.0	-36.5	0.0	36.5	0.0	36.5
Load No.	Max Mz	SRV 3/ 2	-1067.7	5.0	5.0	-13.9	-43.2	67.6	45.4	69.0	80.2
19	Max Mxy	SRV 3/ 22	-1304.1	0.0	9.5	0.0	-88.7	0.0	88.7	0.0	88.7
	Max Mxz	SRV 3/ 2	-1067.7	5.0	5.0	-13.9	-43.2	67.6	45.4	69.0	80.2
Member	Max Myz	SRV 3/ 20	-1217.3	5.0	8.9	-13.9	-83.9	67.6	85.1	69.0	107.8
729	Min Fx	SRV 3/ 49	-1317.3	0.0	9.2	0.0	-86.8	0.0	86.8	0.0	86.8
	Min Fy	SRV 3/ 1	-1148.1	0.0	5.4	0.0	-47.0	0.0	47.0	0.0	47.0
Joint	Min Fz	SRV 3/ 34	-993.9	0.0	4.2	0.0	-36.5	0.0	36.5	0.0	36.5
719	Min Mx	SRV 3/ 2	-1067.7	5.0	5.0	-13.9	-43.2	67.6	45.4	69.0	80.2
	Min My	SRV 3/ 22	-1304.1	0.0	9.5	0.0	-88.7	0.0	88.7	0.0	88.7
	Min Mz	SRV 3/ 1	-1148.1	0.0	5.4	0.0	-47.0	0.0	47.0	0.0	47.0
	Min Mxy	SRV 3/ 34	-993.9	0.0	4.2	0.0	-36.5	0.0	36.5	0.0	36.5
	Min Mxz	SRV 3/ 1	-1148.1	0.0	5.4	0.0	-47.0	0.0	47.0	0.0	47.0
	Min Myz	SRV 3/ 34	-993.9	0.0	4.2	0.0	-36.5	0.0	36.5	0.0	36.5
	Max Fx	SRV 3/ 49	1323.9	0.0	-4.0	0.0	-17.2	-0.1	17.2	0.1	17.2
	Max Fy	SRV 3/ 1	1154.7	0.0	-0.2	0.0	2.1	-0.1	2.1	0.1	2.1
	Max Fz	SRV 3/ 34	1000.5	0.0	1.0	0.0	10.0	-0.1	10.0	0.1	10.0
	Max Mx	SRV 3/ 2	1074.3	-5.0	0.2	13.9	4.1	12.4	14.5	18.6	13.0
	Max My	SRV 3/ 34	1000.5	0.0	1.0	0.0	10.0	-0.1	10.0	0.1	10.0
Load No.	Max Mz	SRV 3/ 2	1074.3	-5.0	0.2	13.9	4.1	12.4	14.5	18.6	13.0
20	Max Mxy	SRV 3/ 23	1227.1	-4.8	-3.8	13.7	-17.7	9.7	22.4	16.7	20.1
	Max Mxz	SRV 3/ 2	1074.3	-5.0	0.2	13.9	4.1	12.4	14.5	18.6	13.0
Member	Max Myz	SRV 3/ 20	1223.9	-5.0	-3.7	13.9	-17.0	12.4	22.0	18.6	21.1
729	Min Fx	SRV 3/ 7	987.3	0.0	0.7	0.0	7.1	-0.1	7.1	0.1	7.1
	Min Fy	SRV 3/ 2	1074.3	-5.0	0.2	13.9	4.1	12.4	14.5	18.6	13.0
Joint	Min Fz	SRV 3/ 22	1310.7	0.0	-4.3	0.0	-20.1	-0.1	20.1	0.1	20.1
720	Min Mx	SRV 3/ 1	1154.7	0.0	-0.2	0.0	2.1	-0.1	2.1	0.1	2.1
	Min My	SRV 3/ 22	1310.7	0.0	-4.3	0.0	-20.1	-0.1	20.1	0.1	20.1
	Min Mz	SRV 3/ 1	1154.7	0.0	-0.2	0.0	2.1	-0.1	2.1	0.1	2.1
	Min Mxy	SRV 3/ 4	1161.1	0.0	-0.4	0.0	1.0	-0.1	1.0	0.1	1.0
	Min Mxz	SRV 3/ 1	1154.7	0.0	-0.2	0.0	2.1	-0.1	2.1	0.1	2.1
	Min Myz	SRV 3/ 4	1161.1	0.0	-0.4	0.0	1.0	-0.1	1.0	0.1	1.0

AASHTO Limit State: SRV 3 - SERVICE III

Load No. / Member / Joint	Max/ Min ID	Combo ID	Fx (kips)	Fy (kips)	Fz (kips)	Mx (ft*kip)	My (ft*kip)	Mz (ft*kip)	Mxy (ft*kip)	Mxz (ft*kip)	Myz (ft*kip)
21 / 732 / 721	Max Fx	SRV 3/ 22	1937.1	0.0	9.5	0.0	-44.7	0.0	44.7	0.0	44.7
	Max Fy	SRV 3/ 2	1316.6	0.2	6.1	0.7	-9.9	4.3	9.9	4.4	10.8
	Max Fz	SRV 3/ 19	1919.8	0.0	9.5	0.0	-44.9	0.0	44.9	0.0	44.9
	Max Mx	SRV 3/ 2	1316.6	0.2	6.1	0.7	-9.9	4.3	9.9	4.4	10.8
	Max My	SRV 3/ 31	1312.0	0.0	5.9	0.0	-6.4	0.0	6.4	0.0	6.4
	Max Mz	SRV 3/ 5	1325.2	0.2	6.1	0.6	-9.7	5.2	9.8	5.2	11.0
	Max Mxy	SRV 3/ 24	1798.6	0.0	9.4	0.0	-45.9	0.0	45.9	0.0	45.9
	Max Mxz	SRV 3/ 5	1325.2	0.2	6.1	0.6	-9.7	5.2	9.8	5.2	11.0
	Max Myz	SRV 3/ 24	1798.6	0.0	9.4	0.0	-45.9	0.0	45.9	0.0	45.9
	Min Fx	SRV 3/ 34	1134.7	0.0	5.7	0.0	-6.8	0.0	6.8	0.0	6.8
	Min Fy	SRV 3/ 1	1387.9	0.0	6.2	0.0	-9.9	0.0	9.9	0.0	9.9
	Min Fz	SRV 3/ 34	1134.7	0.0	5.7	0.0	-6.8	0.0	6.8	0.0	6.8
	Min Mx	SRV 3/ 1	1387.9	0.0	6.2	0.0	-9.9	0.0	9.9	0.0	9.9
	Min My	SRV 3/ 24	1798.6	0.0	9.4	0.0	-45.9	0.0	45.9	0.0	45.9
	Min Mz	SRV 3/ 8	1236.6	0.0	6.0	0.0	-10.0	-0.8	10.0	0.8	10.0
	Min Mxy	SRV 3/ 31	1312.0	0.0	5.9	0.0	-6.4	0.0	6.4	0.0	6.4
	Min Mxz	SRV 3/ 1	1387.9	0.0	6.2	0.0	-9.9	0.0	9.9	0.0	9.9
	Min Myz	SRV 3/ 31	1312.0	0.0	5.9	0.0	-6.4	0.0	6.4	0.0	6.4
22 / 732 / 722	Max Fx	SRV 3/ 34	-1128.5	0.0	4.4	0.0	-7.1	0.0	7.1	0.0	7.1
	Max Fy	SRV 3/ 1	-1381.7	0.0	3.9	0.0	-15.1	0.0	15.1	0.0	15.1
	Max Fz	SRV 3/ 34	-1128.5	0.0	4.4	0.0	-7.1	0.0	7.1	0.0	7.1
	Max Mx	SRV 3/ 1	-1381.7	0.0	3.9	0.0	-15.1	0.0	15.1	0.0	15.1
	Max My	SRV 3/ 34	-1128.5	0.0	4.4	0.0	-7.1	0.0	7.1	0.0	7.1
	Max Mz	SRV 3/ 8	-1230.4	0.0	4.1	0.0	-12.1	0.6	12.1	0.6	12.1
	Max Mxy	SRV 3/ 22	-1930.9	0.0	0.6	0.0	-55.4	0.0	55.4	0.0	55.4
	Max Mxz	SRV 3/ 5	-1319.0	-0.2	4.0	-0.6	-14.0	-1.9	14.0	2.0	14.1
	Max Myz	SRV 3/ 22	-1930.9	0.0	0.6	0.0	-55.4	0.0	55.4	0.0	55.4
	Min Fx	SRV 3/ 22	-1930.9	0.0	0.6	0.0	-55.4	0.0	55.4	0.0	55.4
	Min Fy	SRV 3/ 2	-1310.4	-0.2	4.0	-0.7	-13.7	-1.4	13.8	1.5	13.8
	Min Fz	SRV 3/ 19	-1913.6	0.0	0.6	0.0	-54.8	0.0	54.8	0.0	54.8
	Min Mx	SRV 3/ 2	-1310.4	-0.2	4.0	-0.7	-13.7	-1.4	13.8	1.5	13.8
	Min My	SRV 3/ 22	-1930.9	0.0	0.6	0.0	-55.4	0.0	55.4	0.0	55.4
	Min Mz	SRV 3/ 5	-1319.0	-0.2	4.0	-0.6	-14.0	-1.9	14.0	2.0	14.1
	Min Mxy	SRV 3/ 34	-1128.5	0.0	4.4	0.0	-7.1	0.0	7.1	0.0	7.1
	Min Mxz	SRV 3/ 1	-1381.7	0.0	3.9	0.0	-15.1	0.0	15.1	0.0	15.1
	Min Myz	SRV 3/ 34	-1128.5	0.0	4.4	0.0	-7.1	0.0	7.1	0.0	7.1

Limit State: SERVICE III

CR Creep
LF: 1
CR1: CR+SH+PT_EOC
CR2: CR+SH+PT_D10K

TU Uniform Temperature
LF: 1
TU1: TU-
TU2: TU+
TU3: TU+Temp. Diff.

DW DL Wearing Surfaces & Utilities
LF: 1
DW1: DW

LL Vehicular Live Load
LF: 0.8
LL1: LL1_Deck
LL2: LL1_Deck Offset
LL3: LL1_Roof
LL4: LL2_Deck
LL5: LL2_Deck Offset
LL6: LL2_Roof
LL7: LL3_Deck
LL8: LL3_Deck Offset
LL9: LL3_Roof

DC DL Structural Components & Attachments
LF: 1
DC1: DC

Combo ID	Load Combinations
SRV 3/ 1	1.00*(CR1*1.00 + TU1*1.00 + DW1*1.00 + LL1*0.80 + DC1*1.00)
SRV 3/ 2	1.00*(CR1*1.00 + TU1*1.00 + DW1*1.00 + LL2*0.80 + DC1*1.00)
SRV 3/ 3	1.00*(CR1*1.00 + TU1*1.00 + DW1*1.00 + LL3*0.80 + DC1*1.00)
SRV 3/ 4	1.00*(CR1*1.00 + TU1*1.00 + DW1*1.00 + LL4*0.80 + DC1*1.00)
SRV 3/ 5	1.00*(CR1*1.00 + TU1*1.00 + DW1*1.00 + LL5*0.80 + DC1*1.00)
SRV 3/ 6	1.00*(CR1*1.00 + TU1*1.00 + DW1*1.00 + LL6*0.80 + DC1*1.00)
SRV 3/ 7	1.00*(CR1*1.00 + TU1*1.00 + DW1*1.00 + LL7*0.80 + DC1*1.00)
SRV 3/ 8	1.00*(CR1*1.00 + TU1*1.00 + DW1*1.00 + LL8*0.80 + DC1*1.00)
SRV 3/ 9	1.00*(CR1*1.00 + TU1*1.00 + DW1*1.00 + LL9*0.80 + DC1*1.00)
SRV 3/ 10	1.00*(CR1*1.00 + TU2*1.00 + DW1*1.00 + LL1*0.80 + DC1*1.00)
SRV 3/ 11	1.00*(CR1*1.00 + TU2*1.00 + DW1*1.00 + LL2*0.80 + DC1*1.00)
SRV 3/ 12	1.00*(CR1*1.00 + TU2*1.00 + DW1*1.00 + LL3*0.80 + DC1*1.00)
SRV 3/ 13	1.00*(CR1*1.00 + TU2*1.00 + DW1*1.00 + LL4*0.80 + DC1*1.00)
SRV 3/ 14	1.00*(CR1*1.00 + TU2*1.00 + DW1*1.00 + LL5*0.80 + DC1*1.00)
SRV 3/ 15	1.00*(CR1*1.00 + TU2*1.00 + DW1*1.00 + LL6*0.80 + DC1*1.00)
SRV 3/ 16	1.00*(CR1*1.00 + TU2*1.00 + DW1*1.00 + LL7*0.80 + DC1*1.00)
SRV 3/ 17	1.00*(CR1*1.00 + TU2*1.00 + DW1*1.00 + LL8*0.80 + DC1*1.00)
SRV 3/ 18	1.00*(CR1*1.00 + TU2*1.00 + DW1*1.00 + LL9*0.80 + DC1*1.00)
SRV 3/ 19	1.00*(CR1*1.00 + TU3*1.00 + DW1*1.00 + LL1*0.80 + DC1*1.00)
SRV 3/ 20	1.00*(CR1*1.00 + TU3*1.00 + DW1*1.00 + LL2*0.80 + DC1*1.00)
SRV 3/ 21	1.00*(CR1*1.00 + TU3*1.00 + DW1*1.00 + LL3*0.80 + DC1*1.00)
SRV 3/ 22	1.00*(CR1*1.00 + TU3*1.00 + DW1*1.00 + LL4*0.80 + DC1*1.00)

SRV 3/ 23	1.00*(CR1*1.00 + TU3*1.00 + DW1*1.00 + LL5*0.80 + DC1*1.00)
SRV 3/ 24	1.00*(CR1*1.00 + TU3*1.00 + DW1*1.00 + LL6*0.80 + DC1*1.00)
SRV 3/ 25	1.00*(CR1*1.00 + TU3*1.00 + DW1*1.00 + LL7*0.80 + DC1*1.00)
SRV 3/ 26	1.00*(CR1*1.00 + TU3*1.00 + DW1*1.00 + LL8*0.80 + DC1*1.00)
SRV 3/ 27	1.00*(CR1*1.00 + TU3*1.00 + DW1*1.00 + LL9*0.80 + DC1*1.00)
SRV 3/ 28	1.00*(CR2*1.00 + TU1*1.00 + DW1*1.00 + LL1*0.80 + DC1*1.00)
SRV 3/ 29	1.00*(CR2*1.00 + TU1*1.00 + DW1*1.00 + LL2*0.80 + DC1*1.00)
SRV 3/ 30	1.00*(CR2*1.00 + TU1*1.00 + DW1*1.00 + LL3*0.80 + DC1*1.00)
SRV 3/ 31	1.00*(CR2*1.00 + TU1*1.00 + DW1*1.00 + LL4*0.80 + DC1*1.00)
SRV 3/ 32	1.00*(CR2*1.00 + TU1*1.00 + DW1*1.00 + LL5*0.80 + DC1*1.00)
SRV 3/ 33	1.00*(CR2*1.00 + TU1*1.00 + DW1*1.00 + LL6*0.80 + DC1*1.00)
SRV 3/ 34	1.00*(CR2*1.00 + TU1*1.00 + DW1*1.00 + LL7*0.80 + DC1*1.00)
SRV 3/ 35	1.00*(CR2*1.00 + TU1*1.00 + DW1*1.00 + LL8*0.80 + DC1*1.00)
SRV 3/ 36	1.00*(CR2*1.00 + TU1*1.00 + DW1*1.00 + LL9*0.80 + DC1*1.00)
SRV 3/ 37	1.00*(CR2*1.00 + TU2*1.00 + DW1*1.00 + LL1*0.80 + DC1*1.00)
SRV 3/ 38	1.00*(CR2*1.00 + TU2*1.00 + DW1*1.00 + LL2*0.80 + DC1*1.00)
SRV 3/ 39	1.00*(CR2*1.00 + TU2*1.00 + DW1*1.00 + LL3*0.80 + DC1*1.00)
SRV 3/ 40	1.00*(CR2*1.00 + TU2*1.00 + DW1*1.00 + LL4*0.80 + DC1*1.00)
SRV 3/ 41	1.00*(CR2*1.00 + TU2*1.00 + DW1*1.00 + LL5*0.80 + DC1*1.00)
SRV 3/ 42	1.00*(CR2*1.00 + TU2*1.00 + DW1*1.00 + LL6*0.80 + DC1*1.00)
SRV 3/ 43	1.00*(CR2*1.00 + TU2*1.00 + DW1*1.00 + LL7*0.80 + DC1*1.00)
SRV 3/ 44	1.00*(CR2*1.00 + TU2*1.00 + DW1*1.00 + LL8*0.80 + DC1*1.00)
SRV 3/ 45	1.00*(CR2*1.00 + TU2*1.00 + DW1*1.00 + LL9*0.80 + DC1*1.00)
SRV 3/ 46	1.00*(CR2*1.00 + TU3*1.00 + DW1*1.00 + LL1*0.80 + DC1*1.00)
SRV 3/ 47	1.00*(CR2*1.00 + TU3*1.00 + DW1*1.00 + LL2*0.80 + DC1*1.00)
SRV 3/ 48	1.00*(CR2*1.00 + TU3*1.00 + DW1*1.00 + LL3*0.80 + DC1*1.00)
SRV 3/ 49	1.00*(CR2*1.00 + TU3*1.00 + DW1*1.00 + LL4*0.80 + DC1*1.00)
SRV 3/ 50	1.00*(CR2*1.00 + TU3*1.00 + DW1*1.00 + LL5*0.80 + DC1*1.00)
SRV 3/ 51	1.00*(CR2*1.00 + TU3*1.00 + DW1*1.00 + LL6*0.80 + DC1*1.00)
SRV 3/ 52	1.00*(CR2*1.00 + TU3*1.00 + DW1*1.00 + LL7*0.80 + DC1*1.00)
SRV 3/ 53	1.00*(CR2*1.00 + TU3*1.00 + DW1*1.00 + LL8*0.80 + DC1*1.00)
SRV 3/ 54	1.00*(CR2*1.00 + TU3*1.00 + DW1*1.00 + LL9*0.80 + DC1*1.00)

Limit State: SERVICE III

CR Creep
LF: 1
CR1: CR+SH+PT_EOC
CR2: CR+SH+PT_D10K

TU Uniform Temperature
LF: 1
TU1: TU-
TU2: TU+
TU3: TU+Temp. Diff.

DW DL Wearing Surfaces & Utilities
LF: 1
DW1: DW

LL Vehicular Live Load
LF: 0.8
LL1: LL1_Deck
LL2: LL1_Deck Offset
LL3: LL1_Roof
LL4: LL2_Deck
LL5: LL2_Deck Offset
LL6: LL2_Roof
LL7: LL3_Deck
LL8: LL3_Deck Offset
LL9: LL3_Roof

DC DL Structural Components & Attachments
LF: 1
DC1: DC

Load (Row) Number	User's Load ID	Member ID	Joint ID	Fx (kips)	Fy (kips)	Fz (kips)	Mx (ft*kip)	My (ft*kip)	Mz (ft*kip)
1	CR+SH+PT_D10K	702	701	25.1	0	-97.7	0	635.3	0.1
2	CR+SH+PT_D10K	702	702	-25.1	0	97.7	0	644.5	0
3	CR+SH+PT_D10K	705	703	-71.3	0	3.1	0	-105.8	0
4	CR+SH+PT_D10K	705	704	71.3	0	-3.1	0	15	0
5	CR+SH+PT_D10K	708	705	120.2	0	8.8	0	-75.4	0
6	CR+SH+PT_D10K	708	706	-120.2	0	-8.8	0	-21	0
7	CR+SH+PT_D10K	711	707	-194.6	0	-0.2	0	21.9	0
8	CR+SH+PT_D10K	711	708	194.6	0	0.2	0	-17.8	0
9	CR+SH+PT_D10K	714	709	142.4	0	25.7	0	-156.5	0
10	CR+SH+PT_D10K	714	710	-142.4	0	-25.7	0	-147.4	0
11	CR+SH+PT_D10K	717	711	-298.2	0	-0.8	0	14.5	0
12	CR+SH+PT_D10K	717	712	298.2	0	0.8	0	5.4	0
13	CR+SH+PT_D10K	720	713	158.5	0	-16.3	0	112	0
14	CR+SH+PT_D10K	720	714	-158.5	0	16.3	0	105.8	0
15	CR+SH+PT_D10K	723	715	-235.9	0	-1.5	0	14.5	0
16	CR+SH+PT_D10K	723	716	235.9	0	1.5	0	16	0
17	CR+SH+PT_D10K	726	717	117.5	0	-5.7	0	40	0
18	CR+SH+PT_D10K	726	718	-117.5	0	5.7	0	54.4	0
19	CR+SH+PT_D10K	729	719	-121.8	0	-7.1	0	51.7	0
20	CR+SH+PT_D10K	729	720	121.8	0	7.1	0	61.2	0
21	CR+SH+PT_D10K	732	721	-58.6	0	-3.2	0	45.2	0
22	CR+SH+PT_D10K	732	722	58.6	0	3.2	0	27.6	0

Load (Row) Number	User's Load ID	Member ID	Joint ID	Fx (kips)	Fy (kips)	Fz (kips)	Mx (ft*kip)	My (ft*kip)	Mz (ft*kip)
1	CR+SH+PT_EOC	702	701	20.2	0	-72.9	0	383.7	0.1
2	CR+SH+PT_EOC	702	702	-20.2	0	72.9	0	571.3	0
3	CR+SH+PT_EOC	705	703	-285.8	0	2.9	0	-103.4	0
4	CR+SH+PT_EOC	705	704	285.8	0	-2.9	0	19.7	0
5	CR+SH+PT_EOC	708	705	123.1	0	14.3	0	-106.1	0
6	CR+SH+PT_EOC	708	706	-123.1	0	-14.3	0	-50.2	0
7	CR+SH+PT_EOC	711	707	-229.3	0	0.1	0	13.8	0
8	CR+SH+PT_EOC	711	708	229.3	0	-0.1	0	-16.2	0
9	CR+SH+PT_EOC	714	709	120.1	0	25	0	-151.7	0
10	CR+SH+PT_EOC	714	710	-120.1	0	-25	0	-144	0
11	CR+SH+PT_EOC	717	711	-248.2	0	-0.8	0	14.1	0
12	CR+SH+PT_EOC	717	712	248.2	0	0.8	0	5.9	0
13	CR+SH+PT_EOC	720	713	125.4	0	-15.5	0	105.7	0
14	CR+SH+PT_EOC	720	714	-125.4	0	15.5	0	100.8	0
15	CR+SH+PT_EOC	723	715	-186	0	-1.8	0	17.9	0
16	CR+SH+PT_EOC	723	716	186	0	1.8	0	18.5	0
17	CR+SH+PT_EOC	726	717	108.2	0	-5.7	0	42.4	0
18	CR+SH+PT_EOC	726	718	-108.2	0	5.7	0	52.6	0
19	CR+SH+PT_EOC	729	719	-108.6	0	-6.8	0	49.8	0
20	CR+SH+PT_EOC	729	720	108.6	0	6.8	0	58.3	0
21	CR+SH+PT_EOC	732	721	34.6	0	-2.9	0	41.9	0
22	CR+SH+PT_EOC	732	722	-34.6	0	2.9	0	23	0
1	DC	702	701	61.9	0	1.4	0.1	3.4	-0.3
2	DC	702	702	-51.6	0	-1.4	-0.1	-21.8	-0.1
3	DC	705	703	1848.7	0	0.7	-0.1	297.5	0.1
4	DC	705	704	-1839.2	0	20.2	0.1	-13.2	0
5	DC	708	705	-608.9	0	-26.1	0	190.6	0.1
6	DC	708	706	614.4	0	27.8	0	104.6	0
7	DC	711	707	732.1	0	3.7	0	37.7	0.1
8	DC	711	708	-725.8	0	8.8	0	30.6	0
9	DC	714	709	-243.2	0	-16.1	0	83.9	0
10	DC	714	710	249.4	0	16.2	0	106.9	0
11	DC	717	711	27.8	0	3.5	0	31.3	0
12	DC	717	712	-21.5	0	7.3	0	13.8	0
13	DC	720	713	86	0	-6.5	0	59.7	0
14	DC	720	714	-79.5	0	9	0	43.1	0
15	DC	723	715	-587	0	1.2	0	29.4	0
16	DC	723	716	593.4	0	7.2	0	31.7	0
17	DC	726	717	599.6	0	-6.6	0	110.5	0
18	DC	726	718	-593.2	0	12.5	0	48.2	0
19	DC	729	719	-870.9	0	12.6	0	-101.3	0
20	DC	729	720	877.5	0	-7.4	0	-57.1	-0.1
21	DC	732	721	1382.1	0	10.3	0	-66.5	0
22	DC	732	722	-1375.9	0	-0.2	0	-52.3	0
1	DW	702	701	0	0	0	0	0	0
2	DW	702	702	0	0	0	0	0	0
3	DW	705	703	82.2	0	-0.5	0	19.8	0
4	DW	705	704	-82.2	0	0.5	0	-5.3	0
5	DW	708	705	-34	0	-0.5	0	5.3	0
6	DW	708	706	34	0	0.5	0	0.5	0
7	DW	711	707	16.7	0	-0.1	0	2.1	0
8	DW	711	708	-16.7	0	0.1	0	-0.3	0
9	DW	714	709	-13.6	0	0	0	-0.5	0
10	DW	714	710	13.6	0	0	0	0	0
11	DW	717	711	-19.8	0	-0.1	0	1.8	0
12	DW	717	712	19.8	0	0.1	0	-0.3	0
13	DW	720	713	2	0	-0.9	0	6.1	0
14	DW	720	714	-2	0	0.9	0	5.7	0
15	DW	723	715	-46.3	0	-0.1	0	1.5	0
16	DW	723	716	46.3	0	0.1	0	0.8	0
17	DW	726	717	22.2	0	-0.6	0	5.7	0
18	DW	726	718	-22.2	0	0.6	0	3.9	0
19	DW	729	719	-55	0	0.2	0	-2.6	0
20	DW	729	720	55	0	-0.2	0	-1.3	0
21	DW	732	721	48.8	0	0	0	0	0
22	DW	732	722	-48.8	0	0	0	-1	0

Load (Row) Number	User's Load ID	Member ID	Joint ID	Fx (kips)	Fy (kips)	Fz (kips)	Mx (ft*kip)	My (ft*kip)	Mz (ft*kip)
1	LL1_Deck	702	701	0	0	0	0	0	0
2	LL1_Deck	702	702	0	0	0	0	0	0
3	LL1_Deck	705	703	300.7	0	-1.8	0	72.4	0
4	LL1_Deck	705	704	-300.7	0	1.8	0	-19.3	0
5	LL1_Deck	708	705	-124.3	0	-1.9	0	19.5	0
6	LL1_Deck	708	706	124.3	0	1.9	0	1.8	0
7	LL1_Deck	711	707	61	0	-0.2	0	7.6	0
8	LL1_Deck	711	708	-61	0	0.2	0	-1	0
9	LL1_Deck	714	709	-49.6	0	0.2	0	-2	0
10	LL1_Deck	714	710	49.6	0	-0.2	0	0	0
11	LL1_Deck	717	711	-72.5	0	-0.2	0	6.4	0
12	LL1_Deck	717	712	72.5	0	0.2	0	-1	0
13	LL1_Deck	720	713	7.3	0	-3.2	0	22.3	0
14	LL1_Deck	720	714	-7.3	0	3.2	0	20.9	0
15	LL1_Deck	723	715	-169.6	0	-0.4	0	5.6	0
16	LL1_Deck	723	716	169.6	0	0.4	0	2.9	0
17	LL1_Deck	726	717	81.2	0	-2.1	0	20.8	0
18	LL1_Deck	726	718	-81.2	0	2.1	0	14.2	0
19	LL1_Deck	729	719	-201.3	0	0.9	0	-9.5	0
20	LL1_Deck	729	720	201.3	0	-0.9	0	-4.7	0
21	LL1_Deck	732	721	178.4	0	0.2	0	0	0
22	LL1_Deck	732	722	-178.4	0	-0.2	0	-3.5	0
1	LL1_Deck Offset	702	701	0	0	0	0	0	0
2	LL1_Deck Offset	702	702	0	0	0	0	0	0
3	LL1_Deck Offset	705	703	150.4	-3.1	-0.9	32.6	36.2	-52.8
4	LL1_Deck Offset	705	704	-150.4	3.1	0.9	-32.6	-9.7	-37.7
5	LL1_Deck Offset	708	705	-62.1	-3.5	-1	2.4	9.8	-11.8
6	LL1_Deck Offset	708	706	62.1	3.5	1	-2.4	0.9	-26.8
7	LL1_Deck Offset	711	707	30.5	-0.5	-0.1	-6.2	3.8	0.2
8	LL1_Deck Offset	711	708	-30.5	0.5	0.1	6.2	-0.5	-14.6
9	LL1_Deck Offset	714	709	-24.8	7	0.1	4.1	-1	87.9
10	LL1_Deck Offset	714	710	24.8	-7	-0.1	-4.1	0	-5.3
11	LL1_Deck Offset	717	711	-36.3	0.8	-0.1	-19	3.2	26.8
12	LL1_Deck Offset	717	712	36.3	-0.8	0.1	19	-0.5	-8.9
13	LL1_Deck Offset	720	713	3.6	-9.5	-1.6	20.4	11.2	-111.8
14	LL1_Deck Offset	720	714	-3.6	9.5	1.6	-20.4	10.5	-14.9
15	LL1_Deck Offset	723	715	-84.8	2.9	-0.2	-23.4	2.8	56
16	LL1_Deck Offset	723	716	84.8	-2.9	0.2	23.4	1.4	2.1
17	LL1_Deck Offset	726	717	40.6	-4.7	-1.1	21.2	10.4	-57.6
18	LL1_Deck Offset	726	718	-40.6	4.7	1.1	-21.2	7.1	-21
19	LL1_Deck Offset	729	719	-100.7	6.3	0.4	-17.4	-4.8	84.5
20	LL1_Deck Offset	729	720	100.7	-6.3	-0.4	17.4	-2.3	15.6
21	LL1_Deck Offset	732	721	89.2	0.2	0.1	0.9	0	5.4
22	LL1_Deck Offset	732	722	-89.2	-0.2	-0.1	-0.9	-1.8	-1.7
1	LL1_Roof	702	701	0	0	0	0	0	0
2	LL1_Roof	702	702	0	0	0	0	0	0
3	LL1_Roof	705	703	43.6	0	2.6	0	-10.2	0
4	LL1_Roof	705	704	-43.6	0	-2.6	0	-64.5	0
5	LL1_Roof	708	705	-2.4	0	4.3	0	-10.2	0
6	LL1_Roof	708	706	2.4	0	-4.3	0	-37.2	0
7	LL1_Roof	711	707	1	0	-0.2	0	2.7	0
8	LL1_Roof	711	708	-1	0	0.2	0	3.8	0
9	LL1_Roof	714	709	2.2	0	-0.6	0	0.9	0
10	LL1_Roof	714	710	-2.2	0	0.6	0	6.3	0
11	LL1_Roof	717	711	-5.9	0	0.1	0	-0.5	0
12	LL1_Roof	717	712	5.9	0	-0.1	0	-1.1	0
13	LL1_Roof	720	713	9.5	0	-0.4	0	2.3	0
14	LL1_Roof	720	714	-9.5	0	0.4	0	2.8	0
15	LL1_Roof	723	715	-14.6	0	0	0	0.3	0
16	LL1_Roof	723	716	14.6	0	0	0	0.2	0
17	LL1_Roof	726	717	16.7	0	-0.2	0	2.1	0
18	LL1_Roof	726	718	-16.7	0	0.2	0	0.9	0
19	LL1_Roof	729	719	-15.1	0	0.2	0	-2.3	0
20	LL1_Roof	729	720	15.1	0	-0.2	0	-1.6	0
21	LL1_Roof	732	721	23.7	0	0.1	0	-1	0
22	LL1_Roof	732	722	-23.7	0	-0.1	0	-0.9	0

Load (Row) Number	User's Load ID	Member ID	Joint ID	Fx (kips)	Fy (kips)	Fz (kips)	Mx (ft*kip)	My (ft*kip)	Mz (ft*kip)
1	LL2_Deck	702	701	0	0	0	0	0	0
2	LL2_Deck	702	702	0	0	0	0	0	0
3	LL2_Deck	705	703	352.3	0	-1.9	0	77.2	0
4	LL2_Deck	705	704	-352.3	0	1.9	0	-21.9	0
5	LL2_Deck	708	705	-139.4	0	-2.9	0	26.5	0.1
6	LL2_Deck	708	706	139.4	0	2.9	0	5.5	0
7	LL2_Deck	711	707	93.4	0	-0.3	0	8.8	0
8	LL2_Deck	711	708	-93.4	0	0.3	0	-1.2	0
9	LL2_Deck	714	709	-58.8	0	-0.7	0	3.5	0
10	LL2_Deck	714	710	58.8	0	0.7	0	5	0
11	LL2_Deck	717	711	-53.5	0	-0.3	0	7.5	0
12	LL2_Deck	717	712	53.5	0	0.3	0	-1.5	0
13	LL2_Deck	720	713	4.6	0	-3.1	0	21.3	0
14	LL2_Deck	720	714	-4.6	0	3.1	0	19.7	0
15	LL2_Deck	723	715	-165.5	0	-0.5	0	6.4	0
16	LL2_Deck	723	716	165.5	0	0.5	0	2.8	0
17	LL2_Deck	726	717	89.8	0	-2.1	0	21.8	0
18	LL2_Deck	726	718	-89.8	0	2.1	0	13.9	0
19	LL2_Deck	729	719	-209.3	0	1.1	0	-10.7	0
20	LL2_Deck	729	720	209.3	0	-1.1	0	-6.1	0
21	LL2_Deck	732	721	200	0	0.2	0	0.3	0
22	LL2_Deck	732	722	-200	0	-0.2	0	-4.2	0
1	LL2_Deck Offset	702	701	0	0	0	0	0	0
2	LL2_Deck Offset	702	702	0	0	0	0	0	0
3	LL2_Deck Offset	705	703	176.1	-3.2	-0.9	34.6	38.6	-55.1
4	LL2_Deck Offset	705	704	-176.1	3.2	0.9	-34.6	-11	-38.7
5	LL2_Deck Offset	708	705	-69.7	-4	-1.5	2.9	13.2	-16.6
6	LL2_Deck Offset	708	706	69.7	4	1.5	-2.9	2.8	-27.6
7	LL2_Deck Offset	711	707	46.7	-0.6	-0.1	-5.6	4.4	-0.9
8	LL2_Deck Offset	711	708	-46.7	0.6	0.1	5.6	-0.6	-15.1
9	LL2_Deck Offset	714	709	-29.4	6.6	-0.4	4.2	1.8	84
10	LL2_Deck Offset	714	710	29.4	-6.6	0.4	-4.2	2.5	-5.9
11	LL2_Deck Offset	717	711	-26.8	0.7	-0.1	-18.6	3.8	25.9
12	LL2_Deck Offset	717	712	26.8	-0.7	0.1	18.6	-0.7	-9.7
13	LL2_Deck Offset	720	713	2.3	-9.2	-1.5	20.3	10.7	-108.3
14	LL2_Deck Offset	720	714	-2.3	9.2	1.5	-20.3	9.9	-13.8
15	LL2_Deck Offset	723	715	-82.8	2.7	-0.2	-23.2	3.2	54.9
16	LL2_Deck Offset	723	716	82.8	-2.7	0.2	23.2	1.4	0.3
17	LL2_Deck Offset	726	717	44.9	-4.5	-1.1	21.1	10.9	-55.1
18	LL2_Deck Offset	726	718	-44.9	4.5	1.1	-21.1	7	-20.2
19	LL2_Deck Offset	729	719	-104.7	6	0.5	-17.1	-5.3	83.4
20	LL2_Deck Offset	729	720	104.7	-6	-0.5	17.1	-3.1	12.2
21	LL2_Deck Offset	732	721	100	0.2	0.1	0.8	0.2	6.5
22	LL2_Deck Offset	732	722	-100	-0.2	-0.1	-0.8	-2.1	-2.4
1	LL2_Roof	702	701	0	0	0	0	0	0
2	LL2_Roof	702	702	0	0	0	0	0	0
3	LL2_Roof	705	703	49	0	2.6	0	-9.7	0
4	LL2_Roof	705	704	-49	0	-2.6	0	-64.8	0
5	LL2_Roof	708	705	-3.9	0	4.2	0	-9.5	0
6	LL2_Roof	708	706	3.9	0	-4.2	0	-36.8	0
7	LL2_Roof	711	707	4.3	0	-0.2	0	2.8	0
8	LL2_Roof	711	708	-4.3	0	0.2	0	3.8	0
9	LL2_Roof	714	709	1.3	0	-0.7	0	1.4	0
10	LL2_Roof	714	710	-1.3	0	0.7	0	6.8	0
11	LL2_Roof	717	711	-4.1	0	0.1	0	-0.4	0
12	LL2_Roof	717	712	4.1	0	-0.1	0	-1.2	0
13	LL2_Roof	720	713	9.4	0	-0.4	0	2.2	0
14	LL2_Roof	720	714	-9.4	0	0.4	0	2.6	0
15	LL2_Roof	723	715	-14.5	0	0	0	0.4	0
16	LL2_Roof	723	716	14.5	0	0	0	0.2	0
17	LL2_Roof	726	717	18.1	0	-0.2	0	2.3	0
18	LL2_Roof	726	718	-18.1	0	0.2	0	0.9	0
19	LL2_Roof	729	719	-16.3	0	0.3	0	-2.6	0
20	LL2_Roof	729	720	16.3	0	-0.3	0	-1.8	0
21	LL2_Roof	732	721	26.9	0	0.1	0	-1.2	0
22	LL2_Roof	732	722	-26.9	0	-0.1	0	-1.1	0

Load (Row) Number	User's Load ID	Member ID	Joint ID	Fx (kips)	Fy (kips)	Fz (kips)	Mx (ft*kip)	My (ft*kip)	Mz (ft*kip)
1	LL3_Deck	702	701	0	0	0	0	0	0
2	LL3_Deck	702	702	0	0	0	0	0	0
3	LL3_Deck	705	703	-51.6	0	0.1	0	-4.9	0
4	LL3_Deck	705	704	51.6	0	-0.1	0	2.6	0
5	LL3_Deck	708	705	15.2	0	1	0	-7	-0.1
6	LL3_Deck	708	706	-15.2	0	-1	0	-3.8	0
7	LL3_Deck	711	707	-32.4	0	0	0	-1.1	0
8	LL3_Deck	711	708	32.4	0	0	0	0.2	0
9	LL3_Deck	714	709	9.1	0	0.9	0	-5.5	0
10	LL3_Deck	714	710	-9.1	0	-0.9	0	-5	0
11	LL3_Deck	717	711	-19	0	0	0	-1.1	0
12	LL3_Deck	717	712	19	0	0	0	0.5	0
13	LL3_Deck	720	713	2.7	0	-0.2	0	1	0
14	LL3_Deck	720	714	-2.7	0	0.2	0	1.2	0
15	LL3_Deck	723	715	-4	0	0	0	-0.8	0
16	LL3_Deck	723	716	4	0	0	0	0.1	0
17	LL3_Deck	726	717	-8.6	0	0	0	-1	0
18	LL3_Deck	726	718	8.6	0	0	0	0.3	0
19	LL3_Deck	729	719	8	0	-0.2	0	1.2	0
20	LL3_Deck	729	720	-8	0	0.2	0	1.5	0
21	LL3_Deck	732	721	-21.6	0	0	0	-0.3	0
22	LL3_Deck	732	722	21.6	0	0	0	0.7	0
1	LL3_Deck Offset	702	701	0	0	0	0	0	0
2	LL3_Deck Offset	702	702	0	0	0	0	0	0
3	LL3_Deck Offset	705	703	-25.8	0.1	0	-2	-2.4	2.3
4	LL3_Deck Offset	705	704	25.8	-0.1	0	2	1.3	0.9
5	LL3_Deck Offset	708	705	7.6	0.5	0.5	-0.6	-3.5	4.8
6	LL3_Deck Offset	708	706	-7.6	-0.5	-0.5	0.6	-1.9	0.7
7	LL3_Deck Offset	711	707	-16.2	0.1	0	-0.6	-0.6	1
8	LL3_Deck Offset	711	708	16.2	-0.1	0	0.6	0.1	0.4
9	LL3_Deck Offset	714	709	4.6	0.4	0.4	-0.2	-2.7	3.9
10	LL3_Deck Offset	714	710	-4.6	-0.4	-0.4	0.2	-2.5	0.6
11	LL3_Deck Offset	717	711	-9.5	0.1	0	-0.4	-0.5	0.9
12	LL3_Deck Offset	717	712	9.5	-0.1	0	0.4	0.2	0.8
13	LL3_Deck Offset	720	713	1.4	-0.3	-0.1	0.1	0.5	-3.5
14	LL3_Deck Offset	720	714	-1.4	0.3	0.1	-0.1	0.6	-1.1
15	LL3_Deck Offset	723	715	-2	0.1	0	-0.2	-0.4	1.1
16	LL3_Deck Offset	723	716	2	-0.1	0	0.2	0.1	1.8
17	LL3_Deck Offset	726	717	-4.3	-0.2	0	0.1	-0.5	-2.5
18	LL3_Deck Offset	726	718	4.3	0.2	0	-0.1	0.2	-0.8
19	LL3_Deck Offset	729	719	4	0.3	-0.1	-0.3	0.6	1.1
20	LL3_Deck Offset	729	720	-4	-0.3	0.1	0.3	0.7	3.4
21	LL3_Deck Offset	732	721	-10.8	0	0	0	-0.1	-1
22	LL3_Deck Offset	732	722	10.8	0	0	0	0.3	0.7
1	LL3_Roof	702	701	0	0	0	0	0	0
2	LL3_Roof	702	702	0	0	0	0	0	0
3	LL3_Roof	705	703	-5.4	0	0	0	-0.5	0
4	LL3_Roof	705	704	5.4	0	0	0	0.3	0
5	LL3_Roof	708	705	1.6	0	0.1	0	-0.7	0
6	LL3_Roof	708	706	-1.6	0	-0.1	0	-0.4	0
7	LL3_Roof	711	707	-3.3	0	0	0	-0.1	0
8	LL3_Roof	711	708	3.3	0	0	0	0	0
9	LL3_Roof	714	709	0.9	0	0.1	0	-0.5	0
10	LL3_Roof	714	710	-0.9	0	-0.1	0	-0.5	0
11	LL3_Roof	717	711	-1.8	0	0	0	-0.1	0
12	LL3_Roof	717	712	1.8	0	0	0	0.1	0
13	LL3_Roof	720	713	0.1	0	0	0	0.1	0
14	LL3_Roof	720	714	-0.1	0	0	0	0.1	0
15	LL3_Roof	723	715	-0.1	0	0	0	-0.1	0
16	LL3_Roof	723	716	0.1	0	0	0	0	0
17	LL3_Roof	726	717	-1.4	0	0	0	-0.2	0
18	LL3_Roof	726	718	1.4	0	0	0	0	0
19	LL3_Roof	729	719	1.2	0	0	0	0.3	0
20	LL3_Roof	729	720	-1.2	0	0	0	0.2	0
21	LL3_Roof	732	721	-3.2	0	0	0	0.2	0
22	LL3_Roof	732	722	3.2	0	0	0	0.2	0

Load (Row) Number	User's Load ID	Member ID	Joint ID	Fx (kips)	Fy (kips)	Fz (kips)	Mx (ft*kip)	My (ft*kip)	Mz (ft*kip)
1	TU-	702	701	0	0	0	0	0	0
2	TU-	702	702	0	0	0	0	0	0
3	TU-	705	703	-167	0	-0.2	0	-6.3	0
4	TU-	705	704	167	0	0.2	0	11.5	0
5	TU-	708	705	32	0	3	0	-20.8	0
6	TU-	708	706	-32	0	-3	0	-11.9	0
7	TU-	711	707	-75.4	0	0.2	0	-4.7	0
8	TU-	711	708	75.4	0	-0.2	0	0	0
9	TU-	714	709	7.9	0	1.5	0	-8.3	0
10	TU-	714	710	-7.9	0	-1.5	0	-9.3	0
11	TU-	717	711	-17.3	0	0.1	0	-2.2	0
12	TU-	717	712	17.3	0	-0.1	0	0.9	0
13	TU-	720	713	-14.9	0	0	0	-0.6	0
14	TU-	720	714	14.9	0	0	0	0.1	0
15	TU-	723	715	27.7	0	0.2	0	-2.4	0
16	TU-	723	716	-27.7	0	-0.2	0	-1.2	0
17	TU-	726	717	-60	0	0.9	0	-11.7	0
18	TU-	726	718	60	0	-0.9	0	-2.7	0
19	TU-	729	719	47.4	0	-1.3	0	14.7	0
20	TU-	729	720	-47.4	0	1.3	0	6	0
21	TU-	732	721	-220.3	0	-1.4	0	14.7	0
22	TU-	732	722	220.3	0	1.4	0	18	0
1	TU+	702	701	0	0	0	0	0	0
2	TU+	702	702	0	0	0	0	0	0
3	TU+	705	703	167	0	0.2	0	6.3	0
4	TU+	705	704	-167	0	-0.2	0	-11.5	0
5	TU+	708	705	-32	0	-3	0	20.8	0
6	TU+	708	706	32	0	3	0	11.9	0
7	TU+	711	707	75.4	0	-0.2	0	4.7	0
8	TU+	711	708	-75.4	0	0.2	0	0	0
9	TU+	714	709	-7.9	0	-1.5	0	8.3	0
10	TU+	714	710	7.9	0	1.5	0	9.3	0
11	TU+	717	711	17.3	0	-0.1	0	2.2	0
12	TU+	717	712	-17.3	0	0.1	0	-0.9	0
13	TU+	720	713	14.9	0	0	0	0.6	0
14	TU+	720	714	-14.9	0	0	0	-0.1	0
15	TU+	723	715	-27.7	0	-0.2	0	2.4	0
16	TU+	723	716	27.7	0	0.2	0	1.2	0
17	TU+	726	717	60	0	-0.9	0	11.7	0
18	TU+	726	718	-60	0	0.9	0	2.7	0
19	TU+	729	719	-47.4	0	1.3	0	-14.7	0
20	TU+	729	720	47.4	0	-1.3	0	-6	0
21	TU+	732	721	220.3	0	1.4	0	-14.7	0
22	TU+	732	722	-220.3	0	-1.4	0	-18	0
1	TU+Temp. Diff.	702	701	0	0	0	0	0	0
2	TU+Temp. Diff.	702	702	0	0	0	0	0	0
3	TU+Temp. Diff.	705	703	338.8	0	-0.1	0	24.9	0
4	TU+Temp. Diff.	705	704	-338.8	0	0.1	0	-21.2	0
5	TU+Temp. Diff.	708	705	-58.7	0	-5.4	0	38	0
6	TU+Temp. Diff.	708	706	58.7	0	5.4	0	21	0
7	TU+Temp. Diff.	711	707	133.9	0	-0.3	0	8.5	0
8	TU+Temp. Diff.	711	708	-133.9	0	0.3	0	0	0
9	TU+Temp. Diff.	714	709	-3.6	0	-2.5	0	13.5	0
10	TU+Temp. Diff.	714	710	3.6	0	2.5	0	16.3	0
11	TU+Temp. Diff.	717	711	10.3	0	-0.1	0	3.9	0
12	TU+Temp. Diff.	717	712	-10.3	0	0.1	0	-1.4	0
13	TU+Temp. Diff.	720	713	44.5	0	-0.5	0	5	0
14	TU+Temp. Diff.	720	714	-44.5	0	0.5	0	2.3	0
15	TU+Temp. Diff.	723	715	-75.7	0	-0.2	0	2.1	0
16	TU+Temp. Diff.	723	716	75.7	0	0.2	0	1.6	0
17	TU+Temp. Diff.	726	717	121	0	-1.3	0	17.3	0
18	TU+Temp. Diff.	726	718	-121	0	1.3	0	3.6	0
19	TU+Temp. Diff.	729	719	-102.2	0	2.6	0	-26	0
20	TU+Temp. Diff.	729	720	102.2	0	-2.6	0	-15.1	0
21	TU+Temp. Diff.	732	721	311.6	0	1.9	0	-20.3	0
22	TU+Temp. Diff.	732	722	-311.6	0	-1.9	0	-21.7	0

Selected Limit States

STR 1 - STRENGTH I
STR 3 - STRENGTH III

Max/ Min ID	Load Num	Member Num	Joint Num	Limit State/ Combo ID	Fx (kips)	Fy (kips)	Fz (kips)	Mx (ft*kip)	My (ft*kip)	Mz (ft*kip)	Mxy (ft*kip)	Mxz (ft*kip)	Myz (ft*kip)
Max Fx	1	741	727	STR 1/ 21	1380.0	0.0	4.8	0.0	26.0	0.0	26.0	0.0	26.0
Max Fy	22	771	748	STR 3/ 10	-50.0	10.4	-44.9	-10.0	-487.4	41.9	487.5	43.0	489.2
Max Fz	21	771	747	STR 3/ 115	85.4	-4.6	97.5	5.3	-610.0	-69.4	610.0	69.6	613.9
Max Mx	20	768	746	STR 3/ 10	-340.4	-0.6	4.4	29.0	-12.2	-21.3	31.5	36.0	24.5
Max My	21	771	747	STR 1/ 56	39.2	0.0	7.0	-0.1	272.1	0.1	272.1	0.1	272.1
Max Mz	21	771	747	STR 1/ 62	42.4	4.7	18.1	2.5	162.2	58.0	162.2	58.0	172.3
Max Mxy	22	771	748	STR 1/ 156	-72.6	0.0	-95.2	0.1	-650.0	-0.1	650.0	0.2	650.0
Max Mxz	21	771	747	STR 3/ 40	76.0	-12.5	82.2	10.0	-478.1	-190.3	478.2	190.5	514.6
Max Myz	22	771	748	STR 1/ 156	-72.6	0.0	-95.2	0.1	-650.0	-0.1	650.0	0.2	650.0
Min Fx	2	741	728	STR 1/ 21	-1372.0	0.0	7.9	0.0	7.8	0.0	7.8	0.0	7.8
Min Fy	21	771	747	STR 3/ 10	62.7	-12.5	44.9	10.0	-96.2	-190.1	96.7	190.3	213.0
Min Fz	22	771	748	STR 3/ 115	-72.7	3.9	-96.1	-5.3	-644.8	13.5	644.9	14.5	645.0
Min Mx	19	768	745	STR 3/ 10	347.0	3.4	4.2	-29.0	12.0	52.9	31.4	60.3	54.3
Min My	22	771	748	STR 1/ 156	-72.6	0.0	-95.2	0.1	-650.0	-0.1	650.0	0.2	650.0
Min Mz	21	771	747	STR 3/ 40	76.0	-12.5	82.2	10.0	-478.1	-190.3	478.2	190.5	514.6
Min Mxy	11	756	737	STR 1/ 157	-195.6	0.0	5.5	0.0	0.0	0.0	0.0	0.0	0.0
Min Mxz	1	741	727	STR 1/ 1	990.1	0.0	3.0	0.0	44.6	0.0	44.6	0.0	44.6
Min Myz	11	756	737	STR 1/ 157	-195.6	0.0	5.5	0.0	0.0	0.0	0.0	0.0	0.0

Selected Limit States
STR 1 - STRENGTH I
STR 3 - STRENGTH III

	Combinded Results											
	Max/ Min ID	**Combo ID**	**Fx (kips)**	**Fy (kips)**	**Fz (kips)**	**Mx (ft*kip)**	**My (ft*kip)**	**Mz (ft*kip)**	**Mxy (ft*kip)**	**Mxz (ft*kip)**	**Myz (ft*kip)**
	Max Fx	STR 1/ 21	1380.0	0.0	4.8	0.0	26.0	0.0	26.0	0.0	26.0
	Max Fy	STR 1/ 1	990.1	0.0	3.0	0.0	44.6	0.0	44.6	0.0	44.6
	Max Fz	STR 3/ 109	1265.6	-1.0	6.5	9.1	-9.9	-12.3	13.4	15.3	15.8
	Max Mx	STR 3/ 10	904.9	-2.5	4.4	20.4	26.3	-25.8	33.3	32.9	36.8
	Max My	STR 3/ 135	608.6	-1.0	1.5	9.1	53.5	-12.3	54.2	15.3	54.9
Load No.	Max Mz	STR 1/ 8	886.8	0.0	4.1	-0.9	30.1	4.6	30.1	4.6	30.4
1	Max Mxy	STR 3/ 135	608.6	-1.0	1.5	9.1	53.5	-12.3	54.2	15.3	54.9
	Max Mxz	STR 3/ 1	926.9	-2.8	4.3	18.5	28.5	-27.4	34.0	33.1	39.6
Member	Max Myz	STR 3/ 135	608.6	-1.0	1.5	9.1	53.5	-12.3	54.2	15.3	54.9
741	Min Fx	STR 1/ 191	557.4	0.0	2.0	0.0	33.9	0.0	33.9	0.0	33.9
	Min Fy	STR 3/ 1	926.9	-2.8	4.3	18.5	28.5	-27.4	34.0	33.1	39.6
Joint	Min Fz	STR 1/ 82	709.1	0.0	0.9	0.0	49.0	0.0	49.0	0.0	49.0
727	Min Mx	STR 1/ 7	958.4	-0.2	3.7	-3.0	36.6	1.1	36.7	3.2	36.6
	Min My	STR 3/ 109	1265.6	-1.0	6.5	9.1	-9.9	-12.3	13.4	15.3	15.8
	Min Mz	STR 3/ 1	926.9	-2.8	4.3	18.5	28.5	-27.4	34.0	33.1	39.6
	Min Mxy	STR 3/ 159	925.0	-1.0	4.1	9.1	-0.2	-12.3	9.1	15.3	12.3
	Min Mxz	STR 1/ 1	990.1	0.0	3.0	0.0	44.6	0.0	44.6	0.0	44.6
	Min Myz	STR 1/ 132	1251.5	0.0	6.0	0.0	9.1	0.0	9.1	0.0	9.1
	Max Fx	STR 1/ 191	-551.6	0.0	7.1	0.0	25.8	0.0	25.8	0.0	25.8
	Max Fy	STR 1/ 7	-950.4	0.2	8.9	3.0	23.8	-4.7	24.0	5.6	24.3
	Max Fz	STR 3/ 15	-842.6	-0.1	10.7	-9.1	32.0	2.4	33.2	9.4	32.1
	Max Mx	STR 1/ 7	-950.4	0.2	8.9	3.0	23.8	-4.7	24.0	5.6	24.3
	Max My	STR 3/ 135	-604.9	-0.1	9.0	-9.1	33.0	2.4	34.2	9.4	33.0
Load No.	Max Mz	STR 3/ 10	-896.9	-1.3	8.2	-20.4	17.8	10.8	27.1	23.1	20.8
2	Max Mxy	STR 3/ 135	-604.9	-0.1	9.0	-9.1	33.0	2.4	34.2	9.4	33.0
	Max Mxz	STR 3/ 10	-896.9	-1.3	8.2	-20.4	17.8	10.8	27.1	23.1	20.8
Member	Max Myz	STR 3/ 135	-604.9	-0.1	9.0	-9.1	33.0	2.4	34.2	9.4	33.0
741	Min Fx	STR 1/ 21	-1372.0	0.0	7.9	0.0	7.8	0.0	7.8	0.0	7.8
	Min Fy	STR 3/ 10	-896.9	-1.3	8.2	-20.4	17.8	10.8	27.1	23.1	20.8
Joint	Min Fz	STR 3/ 229	-1017.8	-0.1	3.1	-9.1	-9.8	2.4	13.4	9.4	10.1
728	Min Mx	STR 3/ 10	-896.9	-1.3	8.2	-20.4	17.8	10.8	27.1	23.1	20.8
	Min My	STR 3/ 109	-1255.5	-0.1	4.7	-9.1	-10.8	2.4	14.1	9.4	11.1
	Min Mz	STR 1/ 7	-950.4	0.2	8.9	3.0	23.8	-4.7	24.0	5.6	24.3
	Min Mxy	STR 1/ 159	-1202.5	0.0	6.8	0.0	0.0	0.0	0.0	0.0	0.0
	Min Mxz	STR 1/ 1	-982.1	0.0	9.6	0.0	29.4	0.0	29.4	0.0	29.4
	Min Myz	STR 1/ 159	-1202.5	0.0	6.8	0.0	0.0	0.0	0.0	0.0	0.0

	Combinded Results											
	Max/ Min ID	**Combo ID**	**Fx (kips)**	**Fy (kips)**	**Fz (kips)**	**Mx (ft*kip)**	**My (ft*kip)**	**Mz (ft*kip)**	**Mxy (ft*kip)**	**Mxz (ft*kip)**	**Myz (ft*kip)**
	Max Fx	STR 3/ 190	-452.1	-2.7	2.4	-10.6	4.9	1.0	11.7	10.7	5.0
	Max Fy	STR 3/ 1	-628.3	0.6	2.3	-13.7	15.1	27.4	20.4	30.7	31.3
	Max Fz	STR 3/ 109	-743.1	0.1	6.3	-7.0	-13.4	13.4	15.1	15.2	19.0
	Max Mx	STR 1/ 7	-699.9	-6.0	1.4	17.0	24.6	-64.6	29.9	66.8	69.1
	Max My	STR 1/ 3	-763.9	0.0	0.7	0.0	35.1	0.0	35.1	0.0	35.1
Load No.	Max Mz	STR 3/ 1	-628.3	0.6	2.3	-13.7	15.1	27.4	20.4	30.7	31.3
3	Max Mxy	STR 1/ 3	-763.9	0.0	0.7	0.0	35.1	0.0	35.1	0.0	35.1
	Max Mxz	STR 1/ 7	-699.9	-6.0	1.4	17.0	24.6	-64.6	29.9	66.8	69.1
Member	Max Myz	STR 1/ 7	-699.9	-6.0	1.4	17.0	24.6	-64.6	29.9	66.8	69.1
744	Min Fx	STR 1/ 46	-902.1	0.0	2.9	0.0	16.6	0.0	16.6	0.0	16.6
	Min Fy	STR 1/ 7	-699.9	-6.0	1.4	17.0	24.6	-64.6	29.9	66.8	69.1
Joint	Min Fz	STR 1/ 55	-646.8	0.0	-0.1	0.0	29.8	0.0	29.8	0.0	29.8
729	Min Mx	STR 3/ 1	-628.3	0.6	2.3	-13.7	15.1	27.4	20.4	30.7	31.3
	Min My	STR 3/ 239	-641.6	0.1	5.7	-7.0	-18.6	13.4	19.9	15.2	23.0
	Min Mz	STR 1/ 7	-699.9	-6.0	1.4	17.0	24.6	-64.6	29.9	66.8	69.1
	Min Mxy	STR 1/ 148	-709.0	0.0	3.9	0.0	-0.1	0.0	0.1	0.0	0.1
	Min Mxz	STR 1/ 1	-771.6	0.0	0.5	0.0	34.2	0.0	34.2	0.0	34.2
	Min Myz	STR 1/ 148	-709.0	0.0	3.9	0.0	-0.1	0.0	0.1	0.0	0.1
	Max Fx	STR 1/ 46	909.6	0.0	3.1	0.0	-15.2	0.0	15.2	0.0	15.2
	Max Fy	STR 1/ 7	707.4	6.0	4.6	-17.0	-1.6	-20.8	17.0	26.9	20.9
	Max Fz	STR 1/ 1	779.1	0.0	5.5	0.0	2.0	0.0	2.0	0.0	2.0
	Max Mx	STR 3/ 1	635.8	1.8	3.8	13.7	-4.9	-36.4	14.6	38.9	36.7
	Max My	STR 1/ 82	675.6	0.0	4.4	0.0	3.2	0.0	3.2	0.0	3.2
Load No.	Max Mz	STR 1/ 1	779.1	0.0	5.5	0.0	2.0	0.0	2.0	0.0	2.0
4	Max Mxy	STR 3/ 110	691.5	5.2	0.7	10.6	-27.1	-58.1	29.1	59.1	64.1
	Max Mxz	STR 3/ 10	603.5	5.2	3.3	10.6	-8.1	-58.1	13.4	59.1	58.7
Member	Max Myz	STR 3/ 110	691.5	5.2	0.7	10.6	-27.1	-58.1	29.1	59.1	64.1
744	Min Fx	STR 3/ 190	457.5	5.2	2.0	10.6	-8.6	-58.1	13.7	59.1	58.7
	Min Fy	STR 1/ 1	779.1	0.0	5.5	0.0	2.0	0.0	2.0	0.0	2.0
Joint	Min Fz	STR 3/ 230	564.6	5.2	-0.4	10.6	-26.7	-58.1	28.7	59.1	63.9
730	Min Mx	STR 1/ 7	707.4	6.0	4.6	-17.0	-1.6	-20.8	17.0	26.9	20.9
	Min My	STR 3/ 110	691.5	5.2	0.7	10.6	-27.1	-58.1	29.1	59.1	64.1
	Min Mz	STR 3/ 10	603.5	5.2	3.3	10.6	-8.1	-58.1	13.4	59.1	58.7
	Min Mxy	STR 1/ 83	539.8	0.0	2.8	0.0	-0.3	0.0	0.3	0.0	0.3
	Min Mxz	STR 1/ 1	779.1	0.0	5.5	0.0	2.0	0.0	2.0	0.0	2.0
	Min Myz	STR 1/ 83	539.8	0.0	2.8	0.0	-0.3	0.0	0.3	0.0	0.3

	Combinded Results											
	Max/ Min ID	Combo ID	Fx (kips)	Fy (kips)	Fz (kips)	Mx (ft*kip)	My (ft*kip)	Mz (ft*kip)	Mxy (ft*kip)	Mxz (ft*kip)	Myz (ft*kip)
	Max Fx	STR 3/ 119	314.8	0.6	24.9	1.5	-91.5	19.5	91.5	19.5	93.5
	Max Fy	STR 3/ 1	171.4	1.4	16.6	3.2	-51.8	38.8	51.9	38.9	64.7
	Max Fz	STR 3/ 119	314.8	0.6	24.9	1.5	-91.5	19.5	91.5	19.5	93.5
	Max Mx	STR 3/ 1	171.4	1.4	16.6	3.2	-51.8	38.8	51.9	38.9	64.7
	Max My	STR 1/ 57	112.9	0.0	13.8	0.0	-34.7	0.0	34.7	0.0	34.7
Load No.	Max Mz	STR 3/ 1	171.4	1.4	16.6	3.2	-51.8	38.8	51.9	38.9	64.7
5	Max Mxy	STR 3/ 119	314.8	0.6	24.9	1.5	-91.5	19.5	91.5	19.5	93.5
	Max Mxz	STR 1/ 7	155.0	-9.6	16.4	0.2	-45.7	-90.8	45.7	90.8	101.7
Member	Max Myz	STR 1/ 160	267.2	-9.6	22.2	0.2	-74.3	-90.8	74.3	90.8	117.4
747	Min Fx	STR 1/ 57	112.9	0.0	13.8	0.0	-34.7	0.0	34.7	0.0	34.7
	Min Fy	STR 1/ 7	155.0	-9.6	16.4	0.2	-45.7	-90.8	45.7	90.8	101.7
Joint	Min Fz	STR 3/ 125	116.5	0.6	12.5	1.5	-37.7	19.5	37.7	19.5	42.4
731	Min Mx	STR 1/ 9	154.1	-8.4	16.0	-3.0	-44.8	-81.9	44.9	82.0	93.4
	Min My	STR 3/ 119	314.8	0.6	24.9	1.5	-91.5	19.5	91.5	19.5	93.5
	Min Mz	STR 1/ 7	155.0	-9.6	16.4	0.2	-45.7	-90.8	45.7	90.8	101.7
	Min Mxy	STR 1/ 57	112.9	0.0	13.8	0.0	-34.7	0.0	34.7	0.0	34.7
	Min Mxz	STR 1/ 1	138.3	0.0	16.2	0.0	-39.6	0.0	39.6	0.0	39.6
	Min Myz	STR 1/ 57	112.9	0.0	13.8	0.0	-34.7	0.0	34.7	0.0	34.7
	Max Fx	STR 1/ 57	-108.8	0.0	-13.6	0.0	-82.9	0.0	82.9	0.0	82.9
	Max Fy	STR 1/ 7	-149.3	9.6	-16.1	-0.2	-93.0	8.2	93.0	8.2	93.4
	Max Fz	STR 3/ 125	-112.3	-0.1	-13.2	-1.5	-72.1	-16.8	72.1	16.9	74.1
	Max Mx	STR 1/ 9	-148.5	8.4	-15.8	3.0	-90.8	10.2	90.8	10.6	91.3
	Max My	STR 3/ 185	-116.7	-0.1	-13.2	-1.5	-70.9	-16.8	71.0	16.9	72.9
Load No.	Max Mz	STR 1/ 9	-148.5	8.4	-15.8	3.0	-90.8	10.2	90.8	10.6	91.3
6	Max Mxy	STR 1/ 46	-240.6	0.0	-21.7	0.0	-119.9	0.0	119.9	0.0	119.9
	Max Mxz	STR 3/ 10	-167.7	5.2	-15.9	-2.8	-85.0	-42.4	85.1	42.5	95.0
Member	Max Myz	STR 1/ 46	-240.6	0.0	-21.7	0.0	-119.9	0.0	119.9	0.0	119.9
747	Min Fx	STR 3/ 119	-309.1	-0.1	-23.8	-1.5	-116.6	-16.7	116.6	16.7	117.8
	Min Fy	STR 3/ 5	-134.6	-0.1	-14.6	-1.5	-81.9	-16.8	81.9	16.9	83.6
Joint	Min Fz	STR 3/ 119	-309.1	-0.1	-23.8	-1.5	-116.6	-16.7	116.6	16.7	117.8
732	Min Mx	STR 3/ 1	-165.8	0.0	-16.3	-3.2	-88.7	-32.8	88.7	32.9	94.5
	Min My	STR 1/ 46	-240.6	0.0	-21.7	0.0	-119.9	0.0	119.9	0.0	119.9
	Min Mz	STR 3/ 10	-167.7	5.2	-15.9	-2.8	-85.0	-42.4	85.1	42.5	95.0
	Min Mxy	STR 3/ 185	-116.7	-0.1	-13.2	-1.5	-70.9	-16.8	71.0	16.9	72.9
	Min Mxz	STR 1/ 1	-132.7	0.0	-16.0	0.0	-97.4	0.0	97.4	0.0	97.4
	Min Myz	STR 3/ 185	-116.7	-0.1	-13.2	-1.5	-70.9	-16.8	71.0	16.9	72.9

	Combinded Results											
	Max/ Min ID	**Combo ID**	**Fx (kips)**	**Fy (kips)**	**Fz (kips)**	**Mx (ft*kip)**	**My (ft*kip)**	**Mz (ft*kip)**	**Mxy (ft*kip)**	**Mxz (ft*kip)**	**Myz (ft*kip)**
	Max Fx	STR 3/ 185	-246.2	0.3	6.4	-6.6	-23.1	11.5	24.1	13.2	25.8
	Max Fy	STR 3/ 1	-332.0	1.1	9.0	-13.0	-30.6	23.8	33.3	27.1	38.8
	Max Fz	STR 1/ 46	-523.5	0.0	11.9	0.0	-50.4	0.0	50.4	0.0	50.4
	Max Mx	STR 1/ 7	-371.3	-3.5	9.7	18.6	-36.2	-48.8	40.7	52.2	60.8
	Max My	STR 3/ 185	-246.2	0.3	6.4	-6.6	-23.1	11.5	24.1	13.2	25.8
Load No.	Max Mz	STR 3/ 1	-332.0	1.1	9.0	-13.0	-30.6	23.8	33.3	27.1	38.8
7	Max Mxy	STR 1/ 46	-523.5	0.0	11.9	0.0	-50.4	0.0	50.4	0.0	50.4
	Max Mxz	STR 1/ 7	-371.3	-3.5	9.7	18.6	-36.2	-48.8	40.7	52.2	60.8
Member	Max Myz	STR 1/ 52	-484.3	-3.5	11.2	18.6	-44.8	-48.8	48.4	52.2	66.2
750	Min Fx	STR 1/ 46	-523.5	0.0	11.9	0.0	-50.4	0.0	50.4	0.0	50.4
	Min Fy	STR 1/ 7	-371.3	-3.5	9.7	18.6	-36.2	-48.8	40.7	52.2	60.8
Joint	Min Fz	STR 3/ 185	-246.2	0.3	6.4	-6.6	-23.1	11.5	24.1	13.2	25.8
733	Min Mx	STR 3/ 1	-332.0	1.1	9.0	-13.0	-30.6	23.8	33.3	27.1	38.8
	Min My	STR 1/ 46	-523.5	0.0	11.9	0.0	-50.4	0.0	50.4	0.0	50.4
	Min Mz	STR 1/ 7	-371.3	-3.5	9.7	18.6	-36.2	-48.8	40.7	52.2	60.8
	Min Mxy	STR 3/ 185	-246.2	0.3	6.4	-6.6	-23.1	11.5	24.1	13.2	25.8
	Min Mxz	STR 1/ 1	-410.5	0.0	10.4	0.0	-41.8	0.0	41.8	0.0	41.8
	Min Myz	STR 3/ 190	-273.1	-0.7	6.9	-8.8	-24.5	5.2	26.1	10.2	25.1
	Max Fx	STR 1/ 46	530.2	0.0	-5.4	0.0	-71.5	0.0	71.5	0.0	71.5
	Max Fy	STR 1/ 7	378.0	3.5	-3.2	-18.6	-54.6	0.0	57.7	18.6	54.6
	Max Fz	STR 3/ 70	302.8	3.1	-1.9	8.8	-45.9	-31.4	46.8	32.6	55.6
	Max Mx	STR 3/ 1	338.6	1.3	-2.5	13.0	-50.1	-24.5	51.7	27.7	55.7
	Max My	STR 3/ 190	277.8	3.1	-2.3	8.8	-39.6	-31.4	40.6	32.6	50.5
Load No.	Max Mz	STR 1/ 9	343.1	2.6	-2.9	-16.3	-53.4	6.7	55.8	17.6	53.8
8	Max Mxy	STR 1/ 46	530.2	0.0	-5.4	0.0	-71.5	0.0	71.5	0.0	71.5
	Max Mxz	STR 3/ 10	313.2	3.1	-2.1	8.8	-47.1	-31.4	48.0	32.6	56.6
Member	Max Myz	STR 1/ 46	530.2	0.0	-5.4	0.0	-71.5	0.0	71.5	0.0	71.5
750	Min Fx	STR 3/ 185	252.1	0.4	-2.8	6.6	-41.0	-12.0	41.5	13.7	42.7
	Min Fy	STR 1/ 1	417.2	0.0	-3.9	0.0	-59.4	0.0	59.4	0.0	59.4
Joint	Min Fz	STR 1/ 100	505.2	0.0	-5.7	0.0	-65.1	0.0	65.1	0.0	65.1
734	Min Mx	STR 1/ 7	378.0	3.5	-3.2	-18.6	-54.6	0.0	57.7	18.6	54.6
	Min My	STR 1/ 46	530.2	0.0	-5.4	0.0	-71.5	0.0	71.5	0.0	71.5
	Min Mz	STR 3/ 10	313.2	3.1	-2.1	8.8	-47.1	-31.4	48.0	32.6	56.6
	Min Mxy	STR 3/ 190	277.8	3.1	-2.3	8.8	-39.6	-31.4	40.6	32.6	50.5
	Min Mxz	STR 1/ 1	417.2	0.0	-3.9	0.0	-59.4	0.0	59.4	0.0	59.4
	Min Myz	STR 3/ 185	252.1	0.4	-2.8	6.6	-41.0	-12.0	41.5	13.7	42.7

	Combinded Results											
	Max/ Min ID	**Combo ID**	**Fx (kips)**	**Fy (kips)**	**Fz (kips)**	**Mx (ft*kip)**	**My (ft*kip)**	**Mz (ft*kip)**	**Mxy (ft*kip)**	**Mxz (ft*kip)**	**Myz (ft*kip)**
	Max Fx	STR 1/ 101	259.9	0.0	25.2	0.0	-101.8	0.0	101.8	0.0	101.8
	Max Fy	STR 3/ 1	129.0	0.8	17.4	-1.1	-71.7	35.0	71.7	35.0	79.8
	Max Fz	STR 1/ 101	259.9	0.0	25.2	0.0	-101.8	0.0	101.8	0.0	101.8
	Max Mx	STR 1/ 7	133.9	-8.4	19.3	6.0	-80.0	-78.2	80.2	78.5	111.9
	Max My	STR 3/ 185	107.2	0.3	14.6	-0.7	-60.9	17.2	60.9	17.2	63.3
Load No.	Max Mz	STR 3/ 1	129.0	0.8	17.4	-1.1	-71.7	35.0	71.7	35.0	79.8
9	Max Mxy	STR 1/ 46	211.6	0.0	24.7	0.0	-103.3	0.0	103.3	0.0	103.3
	Max Mxz	STR 1/ 7	133.9	-8.4	19.3	6.0	-80.0	-78.2	80.2	78.5	111.9
Member	Max Myz	STR 1/ 52	206.7	-8.4	22.9	6.0	-95.1	-78.2	95.2	78.5	123.1
753	Min Fx	STR 1/ 111	89.7	0.0	16.5	0.0	-70.2	0.0	70.2	0.0	70.2
	Min Fy	STR 1/ 7	133.9	-8.4	19.3	6.0	-80.0	-78.2	80.2	78.5	111.9
Joint	Min Fz	STR 3/ 65	96.9	0.3	14.5	-0.7	-61.7	17.2	61.7	17.2	64.0
735	Min Mx	STR 3/ 1	129.0	0.8	17.4	-1.1	-71.7	35.0	71.7	35.0	79.8
	Min My	STR 1/ 46	211.6	0.0	24.7	0.0	-103.3	0.0	103.3	0.0	103.3
	Min Mz	STR 1/ 7	133.9	-8.4	19.3	6.0	-80.0	-78.2	80.2	78.5	111.9
	Min Mxy	STR 3/ 185	107.2	0.3	14.6	-0.7	-60.9	17.2	60.9	17.2	63.3
	Min Mxz	STR 1/ 1	138.8	0.0	21.0	0.0	-88.2	0.0	88.2	0.0	88.2
	Min Myz	STR 3/ 185	107.2	0.3	14.6	-0.7	-60.9	17.2	60.9	17.2	63.3
	Max Fx	STR 1/ 111	-84.7	0.0	-15.5	0.0	-52.2	0.0	52.2	0.0	52.2
	Max Fy	STR 1/ 7	-128.9	8.4	-18.3	-6.0	-63.1	14.4	63.3	15.5	64.7
	Max Fz	STR 3/ 65	-91.6	0.1	-14.3	0.7	-47.9	-17.2	47.9	17.2	50.9
	Max Mx	STR 3/ 1	-124.0	0.4	-16.4	1.1	-57.1	-33.6	57.1	33.6	66.3
	Max My	STR 3/ 65	-91.6	0.1	-14.3	0.7	-47.9	-17.2	47.9	17.2	50.9
Load No.	Max Mz	STR 1/ 9	-104.9	7.0	-16.2	-3.0	-55.4	14.5	55.4	14.8	57.2
10	Max Mxy	STR 1/ 101	-256.3	0.0	-24.4	0.0	-87.7	0.0	87.7	0.0	87.7
	Max Mxz	STR 3/ 10	-114.9	4.8	-15.1	0.4	-53.0	-39.2	53.0	39.2	66.0
Member	Max Myz	STR 1/ 101	-256.3	0.0	-24.4	0.0	-87.7	0.0	87.7	0.0	87.7
753	Min Fx	STR 1/ 101	-256.3	0.0	-24.4	0.0	-87.7	0.0	87.7	0.0	87.7
	Min Fy	STR 1/ 1	-133.8	0.0	-20.0	0.0	-69.0	0.0	69.0	0.0	69.0
Joint	Min Fz	STR 1/ 101	-256.3	0.0	-24.4	0.0	-87.7	0.0	87.7	0.0	87.7
736	Min Mx	STR 1/ 7	-128.9	8.4	-18.3	-6.0	-63.1	14.4	63.3	15.5	64.7
	Min My	STR 1/ 101	-256.3	0.0	-24.4	0.0	-87.7	0.0	87.7	0.0	87.7
	Min Mz	STR 3/ 10	-114.9	4.8	-15.1	0.4	-53.0	-39.2	53.0	39.2	66.0
	Min Mxy	STR 3/ 65	-91.6	0.1	-14.3	0.7	-47.9	-17.2	47.9	17.2	50.9
	Min Mxz	STR 1/ 1	-133.8	0.0	-20.0	0.0	-69.0	0.0	69.0	0.0	69.0
	Min Myz	STR 3/ 65	-91.6	0.1	-14.3	0.7	-47.9	-17.2	47.9	17.2	50.9

	Combinded Results											
	Max/ Min ID	**Combo ID**	**Fx (kips)**	**Fy (kips)**	**Fz (kips)**	**Mx (ft*kip)**	**My (ft*kip)**	**Mz (ft*kip)**	**Mxy (ft*kip)**	**Mxz (ft*kip)**	**Myz (ft*kip)**
	Max Fx	STR 3/ 85	-85.9	0.4	3.5	-7.1	10.0	11.9	12.3	13.9	15.5
	Max Fy	STR 3/ 1	-181.7	1.5	5.0	-14.7	-1.5	25.6	14.8	29.5	25.7
	Max Fz	STR 1/ 29	-350.2	0.0	7.3	0.0	-19.8	0.0	19.8	0.0	19.8
	Max Mx	STR 1/ 7	-236.5	-2.1	5.4	15.9	-5.0	-34.1	16.7	37.7	34.5
	Max My	STR 1/ 129	-122.2	0.0	3.9	0.0	12.9	0.0	12.9	0.0	12.9
Load No.	Max Mz	STR 3/ 1	-181.7	1.5	5.0	-14.7	-1.5	25.6	14.8	29.5	25.7
11	Max Mxy	STR 1/ 83	-388.5	0.0	7.2	0.0	-28.4	0.0	28.4	0.0	28.4
	Max Mxz	STR 1/ 7	-236.5	-2.1	5.4	15.9	-5.0	-34.1	16.7	37.7	34.5
Member	Max Myz	STR 1/ 88	-310.6	-2.1	5.8	15.9	-15.8	-34.1	22.4	37.7	37.6
756	Min Fx	STR 1/ 83	-388.5	0.0	7.2	0.0	-28.4	0.0	28.4	0.0	28.4
	Min Fy	STR 1/ 7	-236.5	-2.1	5.4	15.9	-5.0	-34.1	16.7	37.7	34.5
Joint	Min Fz	STR 3/ 205	-124.2	0.4	3.4	-7.1	1.4	11.9	7.3	13.9	12.0
737	Min Mx	STR 3/ 1	-181.7	1.5	5.0	-14.7	-1.5	25.6	14.8	29.5	25.7
	Min My	STR 1/ 83	-388.5	0.0	7.2	0.0	-28.4	0.0	28.4	0.0	28.4
	Min Mz	STR 1/ 7	-236.5	-2.1	5.4	15.9	-5.0	-34.1	16.7	37.7	34.5
	Min Mxy	STR 1/ 157	-195.6	0.0	5.5	0.0	0.0	0.0	0.0	0.0	0.0
	Min Mxz	STR 1/ 1	-291.5	0.0	5.9	0.0	-8.7	0.0	8.7	0.0	8.7
	Min Myz	STR 1/ 157	-195.6	0.0	5.5	0.0	0.0	0.0	0.0	0.0	0.0
	Max Fx	STR 1/ 83	393.1	0.0	-2.1	0.0	-38.9	0.0	38.9	0.0	38.9
	Max Fy	STR 1/ 7	242.9	2.1	1.6	-15.9	-24.0	4.6	28.8	16.6	24.4
	Max Fz	STR 1/ 120	126.7	0.0	3.1	0.0	-18.0	0.0	18.0	0.0	18.0
	Max Mx	STR 3/ 1	188.1	0.8	2.0	14.7	-21.7	-21.0	26.2	25.6	30.2
	Max My	STR 1/ 111	150.6	0.0	2.9	0.0	-17.1	0.0	17.1	0.0	17.1
Load No.	Max Mz	STR 1/ 9	176.6	1.4	2.5	-13.0	-19.6	8.9	23.5	15.7	21.5
12	Max Mxy	STR 1/ 101	371.0	0.0	-2.0	0.0	-41.5	0.0	41.5	0.0	41.5
	Max Mxz	STR 3/ 10	155.8	2.0	2.3	11.6	-19.7	-24.4	22.9	27.0	31.4
Member	Max Myz	STR 1/ 101	371.0	0.0	-2.0	0.0	-41.5	0.0	41.5	0.0	41.5
756	Min Fx	STR 3/ 85	93.4	0.3	2.4	7.1	-18.6	-10.5	20.0	12.7	21.4
	Min Fy	STR 1/ 1	297.8	0.0	1.1	0.0	-26.3	0.0	26.3	0.0	26.3
Joint	Min Fz	STR 1/ 83	393.1	0.0	-2.1	0.0	-38.9	0.0	38.9	0.0	38.9
738	Min Mx	STR 1/ 7	242.9	2.1	1.6	-15.9	-24.0	4.6	28.8	16.6	24.4
	Min My	STR 1/ 101	371.0	0.0	-2.0	0.0	-41.5	0.0	41.5	0.0	41.5
	Min Mz	STR 3/ 10	155.8	2.0	2.3	11.6	-19.7	-24.4	22.9	27.0	31.4
	Min Mxy	STR 1/ 111	150.6	0.0	2.9	0.0	-17.1	0.0	17.1	0.0	17.1
	Min Mxz	STR 1/ 1	297.8	0.0	1.1	0.0	-26.3	0.0	26.3	0.0	26.3
	Min Myz	STR 1/ 111	150.6	0.0	2.9	0.0	-17.1	0.0	17.1	0.0	17.1

	Combinded Results											
	Max/ Min ID	**Combo ID**	**Fx (kips)**	**Fy (kips)**	**Fz (kips)**	**Mx (ft*kip)**	**My (ft*kip)**	**Mz (ft*kip)**	**Mxy (ft*kip)**	**Mxz (ft*kip)**	**Myz (ft*kip)**
	Max Fx	STR 1/ 83	138.0	0.0	19.2	0.0	-71.0	0.0	71.0	0.0	71.0
	Max Fy	STR 3/ 1	-37.8	0.8	7.4	-5.0	-27.5	39.2	28.0	39.5	47.9
	Max Fz	STR 1/ 83	138.0	0.0	19.2	0.0	-71.0	0.0	71.0	0.0	71.0
	Max Mx	STR 1/ 7	-35.9	-6.3	9.3	7.9	-34.5	-57.8	35.4	58.3	67.3
	Max My	STR 1/ 129	-139.2	0.0	0.5	0.0	-4.4	0.0	4.4	0.0	4.4
Load No.	Max Mz	STR 3/ 1	-37.8	0.8	7.4	-5.0	-27.5	39.2	28.0	39.5	47.9
13	Max Mxy	STR 1/ 83	138.0	0.0	19.2	0.0	-71.0	0.0	71.0	0.0	71.0
	Max Mxz	STR 1/ 7	-35.9	-6.3	9.3	7.9	-34.5	-57.8	35.4	58.3	67.3
Member	Max Myz	STR 1/ 88	49.8	-6.3	13.6	7.9	-51.2	-57.8	51.8	58.3	77.2
759	Min Fx	STR 1/ 120	-140.6	0.0	1.0	0.0	-5.9	0.0	5.9	0.0	5.9
	Min Fy	STR 1/ 7	-35.9	-6.3	9.3	7.9	-34.5	-57.8	35.4	58.3	67.3
Joint	Min Fz	STR 1/ 129	-139.2	0.0	0.5	0.0	-4.4	0.0	4.4	0.0	4.4
739	Min Mx	STR 3/ 1	-37.8	0.8	7.4	-5.0	-27.5	39.2	28.0	39.5	47.9
	Min My	STR 1/ 83	138.0	0.0	19.2	0.0	-71.0	0.0	71.0	0.0	71.0
	Min Mz	STR 1/ 7	-35.9	-6.3	9.3	7.9	-34.5	-57.8	35.4	58.3	67.3
	Min Mxy	STR 1/ 129	-139.2	0.0	0.5	0.0	-4.4	0.0	4.4	0.0	4.4
	Min Mxz	STR 1/ 1	-34.0	0.0	11.2	0.0	-41.7	0.0	41.7	0.0	41.7
	Min Myz	STR 1/ 129	-139.2	0.0	0.5	0.0	-4.4	0.0	4.4	0.0	4.4
	Max Fx	STR 1/ 120	145.0	0.0	0.5	0.0	4.2	0.0	4.2	0.0	4.2
	Max Fy	STR 1/ 7	40.3	6.3	-7.8	-7.9	-25.4	13.3	26.6	15.5	28.7
	Max Fz	STR 1/ 129	143.6	0.0	1.0	0.0	6.6	0.0	6.6	0.0	6.6
	Max Mx	STR 3/ 1	42.2	0.3	-5.9	5.0	-18.8	-37.1	19.4	37.4	41.6
	Max My	STR 1/ 129	143.6	0.0	1.0	0.0	6.6	0.0	6.6	0.0	6.6
Load No.	Max Mz	STR 1/ 7	40.3	6.3	-7.8	-7.9	-25.4	13.3	26.6	15.5	28.7
14	Max Mxy	STR 1/ 56	-115.0	0.0	-17.7	0.0	-59.7	0.0	59.7	0.0	59.7
	Max Mxz	STR 3/ 10	50.6	3.6	-4.6	4.6	-14.4	-42.6	15.2	42.8	44.9
Member	Max Myz	STR 1/ 56	-115.0	0.0	-17.7	0.0	-59.7	0.0	59.7	0.0	59.7
759	Min Fx	STR 1/ 83	-134.9	0.0	-18.1	0.0	-59.7	0.0	59.7	0.0	59.7
	Min Fy	STR 1/ 1	38.3	0.0	-9.7	0.0	-31.9	0.0	31.9	0.0	31.9
Joint	Min Fz	STR 1/ 83	-134.9	0.0	-18.1	0.0	-59.7	0.0	59.7	0.0	59.7
740	Min Mx	STR 1/ 7	40.3	6.3	-7.8	-7.9	-25.4	13.3	26.6	15.5	28.7
	Min My	STR 1/ 56	-115.0	0.0	-17.7	0.0	-59.7	0.0	59.7	0.0	59.7
	Min Mz	STR 3/ 10	50.6	3.6	-4.6	4.6	-14.4	-42.6	15.2	42.8	44.9
	Min Mxy	STR 1/ 12	144.5	0.0	-0.1	0.0	2.4	0.0	2.4	0.0	2.4
	Min Mxz	STR 1/ 1	38.3	0.0	-9.7	0.0	-31.9	0.0	31.9	0.0	31.9
	Min Myz	STR 1/ 12	144.5	0.0	-0.1	0.0	2.4	0.0	2.4	0.0	2.4

	Combinded Results											
	Max/ Min ID	Combo ID	Fx (kips)	Fy (kips)	Fz (kips)	Mx (ft*kip)	My (ft*kip)	Mz (ft*kip)	Mxy (ft*kip)	Mxz (ft*kip)	Myz (ft*kip)
	Max Fx	STR 1/ 156	364.1	0.0	-3.6	0.0	83.2	0.0	83.2	0.0	83.2
	Max Fy	STR 3/ 1	74.9	2.0	1.4	-18.6	32.9	31.4	37.8	36.5	45.5
	Max Fz	STR 1/ 56	-219.2	0.0	5.3	0.0	-9.3	0.0	9.3	0.0	9.3
	Max Mx	STR 1/ 7	30.1	-0.7	1.8	10.0	30.3	-17.5	31.9	20.1	35.0
	Max My	STR 1/ 156	364.1	0.0	-3.6	0.0	83.2	0.0	83.2	0.0	83.2
Load No.	Max Mz	STR 3/ 1	74.9	2.0	1.4	-18.6	32.9	31.4	37.8	36.5	45.5
15	Max Mxy	STR 1/ 156	364.1	0.0	-3.6	0.0	83.2	0.0	83.2	0.0	83.2
	Max Mxz	STR 3/ 1	74.9	2.0	1.4	-18.6	32.9	31.4	37.8	36.5	45.5
Member	Max Myz	STR 1/ 156	364.1	0.0	-3.6	0.0	83.2	0.0	83.2	0.0	83.2
762	Min Fx	STR 1/ 56	-219.2	0.0	5.3	0.0	-9.3	0.0	9.3	0.0	9.3
	Min Fy	STR 1/ 7	30.1	-0.7	1.8	10.0	30.3	-17.5	31.9	20.1	35.0
Joint	Min Fz	STR 1/ 156	364.1	0.0	-3.6	0.0	83.2	0.0	83.2	0.0	83.2
741	Min Mx	STR 3/ 1	74.9	2.0	1.4	-18.6	32.9	31.4	37.8	36.5	45.5
	Min My	STR 1/ 56	-219.2	0.0	5.3	0.0	-9.3	0.0	9.3	0.0	9.3
	Min Mz	STR 1/ 7	30.1	-0.7	1.8	10.0	30.3	-17.5	31.9	20.1	35.0
	Min Mxy	STR 1/ 83	-157.5	0.0	4.2	0.0	3.4	0.0	3.4	0.0	3.4
	Min Mxz	STR 1/ 1	-14.9	0.0	2.3	0.0	27.7	0.0	27.7	0.0	27.7
	Min Myz	STR 1/ 83	-157.5	0.0	4.2	0.0	3.4	0.0	3.4	0.0	3.4
	Max Fx	STR 1/ 56	223.6	0.0	-0.2	0.0	-29.4	0.0	29.4	0.0	29.4
	Max Fy	STR 3/ 10	-97.5	1.0	6.0	18.3	0.6	-22.5	18.4	29.1	22.5
	Max Fz	STR 1/ 156	-358.0	0.0	10.7	0.0	17.6	0.0	17.6	0.0	17.6
	Max Mx	STR 3/ 1	-68.8	0.4	5.7	18.6	-1.8	-20.0	18.7	27.3	20.1
	Max My	STR 1/ 156	-358.0	0.0	10.7	0.0	17.6	0.0	17.6	0.0	17.6
Load No.	Max Mz	STR 1/ 9	-115.0	0.0	6.6	-6.0	2.8	9.3	6.6	11.0	9.7
16	Max Mxy	STR 1/ 56	223.6	0.0	-0.2	0.0	-29.4	0.0	29.4	0.0	29.4
	Max Mxz	STR 3/ 10	-97.5	1.0	6.0	18.3	0.6	-22.5	18.4	29.1	22.5
Member	Max Myz	STR 1/ 56	223.6	0.0	-0.2	0.0	-29.4	0.0	29.4	0.0	29.4
762	Min Fx	STR 1/ 156	-358.0	0.0	10.7	0.0	17.6	0.0	17.6	0.0	17.6
	Min Fy	STR 1/ 1	21.0	0.0	4.9	0.0	-8.8	0.0	8.8	0.0	8.8
Joint	Min Fz	STR 1/ 56	223.6	0.0	-0.2	0.0	-29.4	0.0	29.4	0.0	29.4
742	Min Mx	STR 1/ 7	-24.0	0.7	5.4	-10.0	-5.3	6.1	11.3	11.7	8.1
	Min My	STR 1/ 56	223.6	0.0	-0.2	0.0	-29.4	0.0	29.4	0.0	29.4
	Min Mz	STR 3/ 10	-97.5	1.0	6.0	18.3	0.6	-22.5	18.4	29.1	22.5
	Min Mxy	STR 1/ 114	-87.9	0.0	6.0	0.0	-0.1	0.0	0.1	0.0	0.1
	Min Mxz	STR 1/ 1	21.0	0.0	4.9	0.0	-8.8	0.0	8.8	0.0	8.8
	Min Myz	STR 1/ 114	-87.9	0.0	6.0	0.0	-0.1	0.0	0.1	0.0	0.1

	Combinded Results											
	Max/ Min ID	**Combo ID**	**Fx (kips)**	**Fy (kips)**	**Fz (kips)**	**Mx (ft*kip)**	**My (ft*kip)**	**Mz (ft*kip)**	**Mxy (ft*kip)**	**Mxz (ft*kip)**	**Myz (ft*kip)**
	Max Fx	STR 1/ 56	109.0	0.0	14.3	0.0	-38.7	0.1	38.7	0.1	38.7
	Max Fy	STR 3/ 1	-98.9	2.0	-1.6	-9.9	24.6	50.4	26.6	51.4	56.1
	Max Fz	STR 1/ 56	109.0	0.0	14.3	0.0	-38.7	0.1	38.7	0.1	38.7
	Max Mx	STR 1/ 7	-86.0	-3.3	-0.1	5.4	19.9	-30.2	20.6	30.6	36.1
	Max My	STR 1/ 156	-280.4	0.0	-21.3	0.0	101.4	0.1	101.4	0.1	101.4
Load No.	Max Mz	STR 3/ 1	-98.9	2.0	-1.6	-9.9	24.6	50.4	26.6	51.4	56.1
17	Max Mxy	STR 1/ 156	-280.4	0.0	-21.3	0.0	101.4	0.1	101.4	0.1	101.4
	Max Mxz	STR 3/ 1	-98.9	2.0	-1.6	-9.9	24.6	50.4	26.6	51.4	56.1
Member	Max Myz	STR 1/ 156	-280.4	0.0	-21.3	0.0	101.4	0.1	101.4	0.1	101.4
765	Min Fx	STR 1/ 156	-280.4	0.0	-21.3	0.0	101.4	0.1	101.4	0.1	101.4
	Min Fy	STR 1/ 7	-86.0	-3.3	-0.1	5.4	19.9	-30.2	20.6	30.6	36.1
Joint	Min Fz	STR 1/ 156	-280.4	0.0	-21.3	0.0	101.4	0.1	101.4	0.1	101.4
743	Min Mx	STR 3/ 10	-112.8	-0.1	-2.9	-11.3	28.4	44.4	30.6	45.8	52.7
	Min My	STR 1/ 56	109.0	0.0	14.3	0.0	-38.7	0.1	38.7	0.1	38.7
	Min Mz	STR 1/ 61	3.0	-3.3	6.6	5.4	-7.9	-30.2	9.5	30.7	31.2
	Min Mxy	STR 1/ 168	-16.4	0.0	4.4	0.0	-0.1	0.1	0.1	0.1	0.1
	Min Mxz	STR 1/ 55	15.9	0.0	8.1	0.0	-12.8	0.1	12.8	0.1	12.8
	Min Myz	STR 1/ 168	-16.4	0.0	4.4	0.0	-0.1	0.1	0.1	0.1	0.1
	Max Fx	STR 1/ 156	284.3	0.0	23.1	0.0	44.1	0.0	44.1	0.0	44.1
	Max Fy	STR 1/ 7	89.9	3.3	1.8	-5.4	-13.4	8.8	14.4	10.3	16.0
	Max Fz	STR 1/ 156	284.3	0.0	23.1	0.0	44.1	0.0	44.1	0.0	44.1
	Max Mx	STR 3/ 10	116.7	1.3	4.6	11.3	-3.5	-49.1	11.9	50.4	49.3
	Max My	STR 1/ 156	284.3	0.0	23.1	0.0	44.1	0.0	44.1	0.0	44.1
Load No.	Max Mz	STR 1/ 7	89.9	3.3	1.8	-5.4	-13.4	8.8	14.4	10.3	16.0
18	Max Mxy	STR 1/ 56	-106.2	0.0	-13.0	0.0	-50.0	0.0	50.0	0.0	50.0
	Max Mxz	STR 3/ 10	116.7	1.3	4.6	11.3	-3.5	-49.1	11.9	50.4	49.3
Member	Max Myz	STR 3/ 120	205.1	1.3	18.2	11.3	34.2	-49.1	36.0	50.4	59.9
765	Min Fx	STR 1/ 56	-106.2	0.0	-13.0	0.0	-50.0	0.0	50.0	0.0	50.0
	Min Fy	STR 3/ 1	102.8	-0.8	3.4	9.9	-8.1	-41.2	12.8	42.3	41.9
Joint	Min Fz	STR 1/ 56	-106.2	0.0	-13.0	0.0	-50.0	0.0	50.0	0.0	50.0
744	Min Mx	STR 1/ 7	89.9	3.3	1.8	-5.4	-13.4	8.8	14.4	10.3	16.0
	Min My	STR 1/ 56	-106.2	0.0	-13.0	0.0	-50.0	0.0	50.0	0.0	50.0
	Min Mz	STR 3/ 10	116.7	1.3	4.6	11.3	-3.5	-49.1	11.9	50.4	49.3
	Min Mxy	STR 1/ 100	71.9	0.0	6.3	0.0	0.9	0.0	0.9	0.0	0.9
	Min Mxz	STR 1/ 1	76.9	0.0	0.2	0.0	-18.4	0.0	18.4	0.0	18.4
	Min Myz	STR 1/ 100	71.9	0.0	6.3	0.0	0.9	0.0	0.9	0.0	0.9

	Combinded Results											
	Max/ Min ID	Combo ID	Fx (kips)	Fy (kips)	Fz (kips)	Mx (ft*kip)	My (ft*kip)	Mz (ft*kip)	Mxy (ft*kip)	Mxz (ft*kip)	Myz (ft*kip)
	Max Fx	STR 1/ 156	1010.4	0.0	-1.7	0.0	86.8	0.1	86.8	0.1	86.8
	Max Fy	STR 3/ 10	347.0	3.4	4.2	-29.0	12.0	52.9	31.4	60.3	54.3
	Max Fz	STR 1/ 56	-103.1	0.0	8.2	0.0	-46.3	0.1	46.3	0.1	46.3
	Max Mx	STR 1/ 8	199.7	-1.1	6.4	6.0	-12.2	-13.2	13.6	14.5	17.9
	Max My	STR 3/ 115	939.0	1.1	-2.1	-11.2	87.0	20.3	87.7	23.2	89.3
Load No.	Max Mz	STR 3/ 10	347.0	3.4	4.2	-29.0	12.0	52.9	31.4	60.3	54.3
19	Max Mxy	STR 3/ 120	887.4	3.4	-1.5	-29.0	83.5	52.9	88.4	60.3	98.9
	Max Mxz	STR 3/ 10	347.0	3.4	4.2	-29.0	12.0	52.9	31.4	60.3	54.3
Member	Max Myz	STR 3/ 120	887.4	3.4	-1.5	-29.0	83.5	52.9	88.4	60.3	98.9
768	Min Fx	STR 1/ 56	-103.1	0.0	8.2	0.0	-46.3	0.1	46.3	0.1	46.3
	Min Fy	STR 1/ 8	199.7	-1.1	6.4	6.0	-12.2	-13.2	13.6	14.5	17.9
Joint	Min Fz	STR 3/ 115	939.0	1.1	-2.1	-11.2	87.0	20.3	87.7	23.2	89.3
745	Min Mx	STR 3/ 10	347.0	3.4	4.2	-29.0	12.0	52.9	31.4	60.3	54.3
	Min My	STR 1/ 56	-103.1	0.0	8.2	0.0	-46.3	0.1	46.3	0.1	46.3
	Min Mz	STR 1/ 62	18.8	-1.1	6.8	6.0	-28.7	-13.2	29.3	14.5	31.6
	Min Mxy	STR 1/ 190	321.7	0.0	4.4	0.0	0.8	0.1	0.8	0.1	0.8
	Min Mxz	STR 1/ 55	45.4	0.0	7.3	0.0	-36.4	0.1	36.4	0.1	36.4
	Min Myz	STR 1/ 190	321.7	0.0	4.4	0.0	0.8	0.1	0.8	0.1	0.8
	Max Fx	STR 1/ 56	107.8	0.0	-2.1	0.0	-40.0	0.0	40.0	0.0	40.0
	Max Fy	STR 1/ 8	-193.1	1.1	2.1	-6.0	-23.7	-2.6	24.4	6.5	23.8
	Max Fz	STR 1/ 156	-1003.7	0.0	10.2	0.0	11.1	0.0	11.1	0.0	11.1
	Max Mx	STR 3/ 10	-340.4	-0.6	4.4	29.0	-12.2	-21.3	31.5	36.0	24.5
	Max My	STR 1/ 156	-1003.7	0.0	10.2	0.0	11.1	0.0	11.1	0.0	11.1
Load No.	Max Mz	STR 1/ 9	-389.3	-1.8	4.2	5.3	-13.4	10.2	14.3	11.4	16.8
20	Max Mxy	STR 1/ 56	107.8	0.0	-2.1	0.0	-40.0	0.0	40.0	0.0	40.0
	Max Mxz	STR 3/ 10	-340.4	-0.6	4.4	29.0	-12.2	-21.3	31.5	36.0	24.5
Member	Max Myz	STR 1/ 56	107.8	0.0	-2.1	0.0	-40.0	0.0	40.0	0.0	40.0
768	Min Fx	STR 1/ 156	-1003.7	0.0	10.2	0.0	11.1	0.0	11.1	0.0	11.1
	Min Fy	STR 1/ 9	-389.3	-1.8	4.2	5.3	-13.4	10.2	14.3	11.4	16.8
Joint	Min Fz	STR 1/ 56	107.8	0.0	-2.1	0.0	-40.0	0.0	40.0	0.0	40.0
746	Min Mx	STR 1/ 8	-193.1	1.1	2.1	-6.0	-23.7	-2.6	24.4	6.5	23.8
	Min My	STR 1/ 56	107.8	0.0	-2.1	0.0	-40.0	0.0	40.0	0.0	40.0
	Min Mz	STR 3/ 10	-340.4	-0.6	4.4	29.0	-12.2	-21.3	31.5	36.0	24.5
	Min Mxy	STR 1/ 149	-738.3	0.0	8.1	0.0	0.1	0.0	0.1	0.0	0.1
	Min Mxz	STR 1/ 1	-219.7	0.0	1.6	0.0	-25.6	0.0	25.6	0.0	25.6
	Min Myz	STR 1/ 149	-738.3	0.0	8.1	0.0	0.1	0.0	0.1	0.0	0.1

	Combinded Results											
	Max/ Min ID	**Combo ID**	**Fx (kips)**	**Fy (kips)**	**Fz (kips)**	**Mx (ft*kip)**	**My (ft*kip)**	**Mz (ft*kip)**	**Mxy (ft*kip)**	**Mxz (ft*kip)**	**Myz (ft*kip)**
	Max Fx	STR 1/ 159	89.2	0.0	92.9	-0.1	-565.0	-0.4	565.0	0.4	565.0
	Max Fy	STR 1/ 8	63.1	4.7	31.2	2.5	50.8	57.9	50.8	57.9	77.0
	Max Fz	STR 3/ 115	85.4	-4.6	97.5	5.3	-610.0	-69.4	610.0	69.6	613.9
	Max Mx	STR 3/ 121	45.7	-11.5	29.1	11.7	52.5	-161.5	53.8	162.0	169.9
	Max My	STR 1/ 56	39.2	0.0	7.0	-0.1	272.1	0.1	272.1	0.1	272.1
Load No.	Max Mz	STR 1/ 62	42.4	4.7	18.1	2.5	162.2	58.0	162.2	58.0	172.3
21	Max Mxy	STR 3/ 115	85.4	-4.6	97.5	5.3	-610.0	-69.4	610.0	69.6	613.9
	Max Mxz	STR 3/ 40	76.0	-12.5	82.2	10.0	-478.1	-190.3	478.2	190.5	514.6
Member	Max Myz	STR 3/ 115	85.4	-4.6	97.5	5.3	-610.0	-69.4	610.0	69.6	613.9
771	Min Fx	STR 1/ 56	39.2	0.0	7.0	-0.1	272.1	0.1	272.1	0.1	272.1
	Min Fy	STR 3/ 10	62.7	-12.5	44.9	10.0	-96.2	-190.1	96.7	190.3	213.0
Joint	Min Fz	STR 1/ 56	39.2	0.0	7.0	-0.1	272.1	0.1	272.1	0.1	272.1
747	Min Mx	STR 1/ 9	67.6	-7.9	44.9	-4.0	-79.8	-90.5	79.9	90.6	120.7
	Min My	STR 3/ 115	85.4	-4.6	97.5	5.3	-610.0	-69.4	610.0	69.6	613.9
	Min Mz	STR 3/ 40	76.0	-12.5	82.2	10.0	-478.1	-190.3	478.2	190.5	514.6
	Min Mxy	STR 1/ 82	49.8	0.0	34.3	-0.1	-0.2	-0.2	0.2	0.2	0.3
	Min Mxz	STR 1/ 65	44.4	0.0	22.5	-0.1	121.0	0.0	121.0	0.1	121.0
	Min Myz	STR 1/ 82	49.8	0.0	34.3	-0.1	-0.2	-0.2	0.2	0.2	0.3
	Max Fx	STR 1/ 56	-30.0	0.0	-7.0	0.1	-363.8	0.0	363.8	0.1	363.8
	Max Fy	STR 3/ 10	-50.0	10.4	-44.9	-10.0	-487.4	41.9	487.5	43.0	489.2
	Max Fz	STR 1/ 56	-30.0	0.0	-7.0	0.1	-363.8	0.0	363.8	0.1	363.8
	Max Mx	STR 1/ 9	-54.9	7.9	-44.9	4.0	-503.7	-12.1	503.7	12.7	503.8
	Max My	STR 1/ 56	-30.0	0.0	-7.0	0.1	-363.8	0.0	363.8	0.1	363.8
Load No.	Max Mz	STR 3/ 10	-50.0	10.4	-44.9	-10.0	-487.4	41.9	487.5	43.0	489.2
22	Max Mxy	STR 1/ 156	-72.6	0.0	-95.2	0.1	-650.0	-0.1	650.0	0.2	650.0
	Max Mxz	STR 3/ 130	-32.9	10.4	-31.8	-10.0	-428.2	41.9	428.3	43.0	430.2
Member	Max Myz	STR 1/ 156	-72.6	0.0	-95.2	0.1	-650.0	-0.1	650.0	0.2	650.0
771	Min Fx	STR 1/ 159	-76.4	0.0	-92.9	0.1	-640.9	-0.1	640.9	0.2	640.9
	Min Fy	STR 1/ 8	-50.3	-4.7	-31.2	-2.5	-456.3	2.8	456.3	3.8	456.3
Joint	Min Fz	STR 3/ 115	-72.7	3.9	-96.1	-5.3	-644.8	13.5	644.9	14.5	645.0
748	Min Mx	STR 3/ 121	-36.5	9.2	-29.1	-11.7	-430.1	27.2	430.3	29.6	431.0
	Min My	STR 1/ 156	-72.6	0.0	-95.2	0.1	-650.0	-0.1	650.0	0.2	650.0
	Min Mz	STR 1/ 36	-63.0	7.9	-66.7	4.0	-555.1	-12.2	555.1	12.8	555.2
	Min Mxy	STR 1/ 56	-30.0	0.0	-7.0	0.1	-363.8	0.0	363.8	0.1	363.8
	Min Mxz	STR 1/ 55	-32.5	0.0	-12.5	0.1	-392.3	0.0	392.3	0.1	392.3
	Min Myz	STR 1/ 56	-30.0	0.0	-7.0	0.1	-363.8	0.0	363.8	0.1	363.8

AASHTO Limit State: STR 1 - STRENGTH I													
Max/ Min ID	Load Num	Member Num	Joint Num	Limit State/ Combo ID	Fx (kips)	Fy (kips)	Fz (kips)	Mx (ft*kip)	My (ft*kip)	Mz (ft*kip)	Mxy (ft*kip)	Mxz (ft*kip)	Myz (ft*kip)
Max Fx	1	741	727	STR 1/ 21	1380.0	0.0	4.8	0.0	26.0	0.0	26.0	0.0	26.0
Max Fy	6	747	732	STR 1/ 7	-149.3	9.6	-16.1	-0.2	-93.0	8.2	93.0	8.2	93.4
Max Fz	21	771	747	STR 1/ 156	85.3	0.0	95.2	-0.1	-584.4	-0.6	584.4	0.6	584.4
Max Mx	7	750	733	STR 1/ 7	-371.3	-3.5	9.7	18.6	-36.2	-48.8	40.7	52.2	60.8
Max My	21	771	747	STR 1/ 56	39.2	0.0	7.0	-0.1	272.1	0.1	272.1	0.1	272.1
Max Mz	21	771	747	STR 1/ 62	42.4	4.7	18.1	2.5	162.2	58.0	162.2	58.0	172.3
Max Mxy	22	771	748	STR 1/ 156	-72.6	0.0	-95.2	0.1	-650.0	-0.1	650.0	0.2	650.0
Max Mxz	5	747	731	STR 1/ 7	155.0	-9.6	16.4	0.2	-45.7	-90.8	45.7	90.8	101.7
Max Myz	22	771	748	STR 1/ 156	-72.6	0.0	-95.2	0.1	-650.0	-0.1	650.0	0.2	650.0
Min Fx	2	741	728	STR 1/ 21	-1372.0	0.0	7.9	0.0	7.8	0.0	7.8	0.0	7.8
Min Fy	5	747	731	STR 1/ 7	155.0	-9.6	16.4	0.2	-45.7	-90.8	45.7	90.8	101.7
Min Fz	22	771	748	STR 1/ 156	-72.6	0.0	-95.2	0.1	-650.0	-0.1	650.0	0.2	650.0
Min Mx	8	750	734	STR 1/ 7	378.0	3.5	-3.2	-18.6	-54.6	0.0	57.7	18.6	54.6
Min My	22	771	748	STR 1/ 156	-72.6	0.0	-95.2	0.1	-650.0	-0.1	650.0	0.2	650.0
Min Mz	5	747	731	STR 1/ 7	155.0	-9.6	16.4	0.2	-45.7	-90.8	45.7	90.8	101.7
Min Mxy	11	756	737	STR 1/ 157	-195.6	0.0	5.5	0.0	0.0	0.0	0.0	0.0	0.0
Min Mxz	1	741	727	STR 1/ 1	990.1	0.0	3.0	0.0	44.6	0.0	44.6	0.0	44.6
Min Myz	11	756	737	STR 1/ 157	-195.6	0.0	5.5	0.0	0.0	0.0	0.0	0.0	0.0

AASHTO Limit State: STR 1 - STRENGTH I

	Max/ Min ID	Combo ID	Fx (kips)	Fy (kips)	Fz (kips)	Mx (ft*kip)	My (ft*kip)	Mz (ft*kip)	Mxy (ft*kip)	Mxz (ft*kip)	Myz (ft*kip)
	Max Fx	STR 1/ 21	1380.0	0.0	4.8	0.0	26.0	0.0	26.0	0.0	26.0
	Max Fy	STR 1/ 1	990.1	0.0	3.0	0.0	44.6	0.0	44.6	0.0	44.6
	Max Fz	STR 1/ 130	1240.8	0.0	6.0	0.0	9.8	0.0	9.8	0.0	9.8
	Max Mx	STR 1/ 1	990.1	0.0	3.0	0.0	44.6	0.0	44.6	0.0	44.6
	Max My	STR 1/ 82	709.1	0.0	0.9	0.0	49.0	0.0	49.0	0.0	49.0
Load No.	Max Mz	STR 1/ 8	886.8	0.0	4.1	-0.9	30.1	4.6	30.1	4.6	30.4
1	Max Mxy	STR 1/ 82	709.1	0.0	0.9	0.0	49.0	0.0	49.0	0.0	49.0
	Max Mxz	STR 1/ 8	886.8	0.0	4.1	-0.9	30.1	4.6	30.1	4.6	30.4
Member	Max Myz	STR 1/ 82	709.1	0.0	0.9	0.0	49.0	0.0	49.0	0.0	49.0
741	Min Fx	STR 1/ 191	557.4	0.0	2.0	0.0	33.9	0.0	33.9	0.0	33.9
	Min Fy	STR 1/ 7	958.4	-0.2	3.7	-3.0	36.6	1.1	36.7	3.2	36.6
Joint	Min Fz	STR 1/ 82	709.1	0.0	0.9	0.0	49.0	0.0	49.0	0.0	49.0
727	Min Mx	STR 1/ 7	958.4	-0.2	3.7	-3.0	36.6	1.1	36.7	3.2	36.6
	Min My	STR 1/ 132	1251.5	0.0	6.0	0.0	9.1	0.0	9.1	0.0	9.1
	Min Mz	STR 1/ 9	998.5	-0.2	3.9	-2.3	35.0	-3.5	35.1	4.2	35.2
	Min Mxy	STR 1/ 132	1251.5	0.0	6.0	0.0	9.1	0.0	9.1	0.0	9.1
	Min Mxz	STR 1/ 1	990.1	0.0	3.0	0.0	44.6	0.0	44.6	0.0	44.6
	Min Myz	STR 1/ 132	1251.5	0.0	6.0	0.0	9.1	0.0	9.1	0.0	9.1
	Max Fx	STR 1/ 191	-551.6	0.0	7.1	0.0	25.8	0.0	25.8	0.0	25.8
	Max Fy	STR 1/ 7	-950.4	0.2	8.9	3.0	23.8	-4.7	24.0	5.6	24.3
	Max Fz	STR 1/ 28	-941.1	0.0	9.8	0.0	31.7	0.0	31.7	0.0	31.7
	Max Mx	STR 1/ 7	-950.4	0.2	8.9	3.0	23.8	-4.7	24.0	5.6	24.3
	Max My	STR 1/ 82	-703.4	0.0	8.2	0.0	32.7	0.0	32.7	0.0	32.7
Load No.	Max Mz	STR 1/ 1	-982.1	0.0	9.6	0.0	29.4	0.0	29.4	0.0	29.4
2	Max Mxy	STR 1/ 82	-703.4	0.0	8.2	0.0	32.7	0.0	32.7	0.0	32.7
	Max Mxz	STR 1/ 7	-950.4	0.2	8.9	3.0	23.8	-4.7	24.0	5.6	24.3
Member	Max Myz	STR 1/ 82	-703.4	0.0	8.2	0.0	32.7	0.0	32.7	0.0	32.7
741	Min Fx	STR 1/ 21	-1372.0	0.0	7.9	0.0	7.8	0.0	7.8	0.0	7.8
	Min Fy	STR 1/ 1	-982.1	0.0	9.6	0.0	29.4	0.0	29.4	0.0	29.4
Joint	Min Fz	STR 1/ 184	-995.1	0.0	5.0	0.0	-0.5	0.0	0.5	0.0	0.5
728	Min Mx	STR 1/ 1	-982.1	0.0	9.6	0.0	29.4	0.0	29.4	0.0	29.4
	Min My	STR 1/ 132	-1243.5	0.0	6.6	0.0	-2.3	0.0	2.3	0.0	2.3
	Min Mz	STR 1/ 7	-950.4	0.2	8.9	3.0	23.8	-4.7	24.0	5.6	24.3
	Min Mxy	STR 1/ 159	-1202.5	0.0	6.8	0.0	0.0	0.0	0.0	0.0	0.0
	Min Mxz	STR 1/ 1	-982.1	0.0	9.6	0.0	29.4	0.0	29.4	0.0	29.4
	Min Myz	STR 1/ 159	-1202.5	0.0	6.8	0.0	0.0	0.0	0.0	0.0	0.0

	AASHTO Limit State: STR 1 - STRENGTH I											
	Max/ Min ID	**Combo ID**	**Fx (kips)**	**Fy (kips)**	**Fz (kips)**	**Mx (ft*kip)**	**My (ft*kip)**	**Mz (ft*kip)**	**Mxy (ft*kip)**	**Mxz (ft*kip)**	**Myz (ft*kip)**
	Max Fx	STR 1/ 167	-485.2	0.0	1.9	0.0	8.1	0.0	8.1	0.0	8.1
	Max Fy	STR 1/ 1	-771.6	0.0	0.5	0.0	34.2	0.0	34.2	0.0	34.2
	Max Fz	STR 1/ 131	-717.0	0.0	4.9	0.0	-4.3	0.0	4.3	0.0	4.3
	Max Mx	STR 1/ 7	-699.9	-6.0	1.4	17.0	24.6	-64.6	29.9	66.8	69.1
	Max My	STR 1/ 3	-763.9	0.0	0.7	0.0	35.1	0.0	35.1	0.0	35.1
Load No.	Max Mz	STR 1/ 1	-771.6	0.0	0.5	0.0	34.2	0.0	34.2	0.0	34.2
3	Max Mxy	STR 1/ 3	-763.9	0.0	0.7	0.0	35.1	0.0	35.1	0.0	35.1
	Max Mxz	STR 1/ 7	-699.9	-6.0	1.4	17.0	24.6	-64.6	29.9	66.8	69.1
Member	Max Myz	STR 1/ 7	-699.9	-6.0	1.4	17.0	24.6	-64.6	29.9	66.8	69.1
744	Min Fx	STR 1/ 46	-902.1	0.0	2.9	0.0	16.6	0.0	16.6	0.0	16.6
	Min Fy	STR 1/ 7	-699.9	-6.0	1.4	17.0	24.6	-64.6	29.9	66.8	69.1
Joint	Min Fz	STR 1/ 55	-646.8	0.0	-0.1	0.0	29.8	0.0	29.8	0.0	29.8
729	Min Mx	STR 1/ 1	-771.6	0.0	0.5	0.0	34.2	0.0	34.2	0.0	34.2
	Min My	STR 1/ 209	-622.4	0.0	4.2	0.0	-10.4	0.0	10.4	0.0	10.4
	Min Mz	STR 1/ 7	-699.9	-6.0	1.4	17.0	24.6	-64.6	29.9	66.8	69.1
	Min Mxy	STR 1/ 148	-709.0	0.0	3.9	0.0	-0.1	0.0	0.1	0.0	0.1
	Min Mxz	STR 1/ 1	-771.6	0.0	0.5	0.0	34.2	0.0	34.2	0.0	34.2
	Min Myz	STR 1/ 148	-709.0	0.0	3.9	0.0	-0.1	0.0	0.1	0.0	0.1
	Max Fx	STR 1/ 46	909.6	0.0	3.1	0.0	-15.2	0.0	15.2	0.0	15.2
	Max Fy	STR 1/ 7	707.4	6.0	4.6	-17.0	-1.6	-20.8	17.0	26.9	20.9
	Max Fz	STR 1/ 1	779.1	0.0	5.5	0.0	2.0	0.0	2.0	0.0	2.0
	Max Mx	STR 1/ 1	779.1	0.0	5.5	0.0	2.0	0.0	2.0	0.0	2.0
	Max My	STR 1/ 82	675.6	0.0	4.4	0.0	3.2	0.0	3.2	0.0	3.2
Load No.	Max Mz	STR 1/ 1	779.1	0.0	5.5	0.0	2.0	0.0	2.0	0.0	2.0
4	Max Mxy	STR 1/ 135	791.7	4.7	2.0	-15.1	-22.1	-8.6	26.7	17.3	23.7
	Max Mxz	STR 1/ 7	707.4	6.0	4.6	-17.0	-1.6	-20.8	17.0	26.9	20.9
Member	Max Myz	STR 1/ 133	795.4	6.0	2.0	-17.0	-20.5	-20.8	26.6	26.9	29.2
744	Min Fx	STR 1/ 167	490.6	0.0	2.4	0.0	-4.9	0.0	4.9	0.0	4.9
	Min Fy	STR 1/ 1	779.1	0.0	5.5	0.0	2.0	0.0	2.0	0.0	2.0
Joint	Min Fz	STR 1/ 185	597.6	0.0	0.0	0.0	-23.0	0.0	23.0	0.0	23.0
730	Min Mx	STR 1/ 7	707.4	6.0	4.6	-17.0	-1.6	-20.8	17.0	26.9	20.9
	Min My	STR 1/ 131	724.5	0.0	1.1	0.0	-23.3	0.0	23.3	0.0	23.3
	Min Mz	STR 1/ 7	707.4	6.0	4.6	-17.0	-1.6	-20.8	17.0	26.9	20.9
	Min Mxy	STR 1/ 83	539.8	0.0	2.8	0.0	-0.3	0.0	0.3	0.0	0.3
	Min Mxz	STR 1/ 1	779.1	0.0	5.5	0.0	2.0	0.0	2.0	0.0	2.0
	Min Myz	STR 1/ 83	539.8	0.0	2.8	0.0	-0.3	0.0	0.3	0.0	0.3

	AASHTO Limit State: STR 1 - STRENGTH I											
	Max/ Min ID	Combo ID	Fx (kips)	Fy (kips)	Fz (kips)	Mx (ft*kip)	My (ft*kip)	Mz (ft*kip)	Mxy (ft*kip)	Mxz (ft*kip)	Myz (ft*kip)
	Max Fx	STR 1/ 159	289.3	0.0	22.9	0.0	-82.4	0.0	82.4	0.0	82.4
	Max Fy	STR 1/ 1	138.3	0.0	16.2	0.0	-39.6	0.0	39.6	0.0	39.6
	Max Fz	STR 1/ 155	285.2	0.0	23.1	0.0	-82.4	0.0	82.4	0.0	82.4
	Max Mx	STR 1/ 8	172.1	-1.2	16.9	3.2	-52.7	-8.9	52.8	9.5	53.5
	Max My	STR 1/ 57	112.9	0.0	13.8	0.0	-34.7	0.0	34.7	0.0	34.7
Load No.	Max Mz	STR 1/ 1	138.3	0.0	16.2	0.0	-39.6	0.0	39.6	0.0	39.6
5	Max Mxy	STR 1/ 157	288.9	0.0	22.9	0.0	-82.5	0.0	82.5	0.0	82.5
	Max Mxz	STR 1/ 7	155.0	-9.6	16.4	0.2	-45.7	-90.8	45.7	90.8	101.7
Member	Max Myz	STR 1/ 160	267.2	-9.6	22.2	0.2	-74.3	-90.8	74.3	90.8	117.4
747	Min Fx	STR 1/ 57	112.9	0.0	13.8	0.0	-34.7	0.0	34.7	0.0	34.7
	Min Fy	STR 1/ 7	155.0	-9.6	16.4	0.2	-45.7	-90.8	45.7	90.8	101.7
Joint	Min Fz	STR 1/ 57	112.9	0.0	13.8	0.0	-34.7	0.0	34.7	0.0	34.7
731	Min Mx	STR 1/ 9	154.1	-8.4	16.0	-3.0	-44.8	-81.9	44.9	82.0	93.4
	Min My	STR 1/ 157	288.9	0.0	22.9	0.0	-82.5	0.0	82.5	0.0	82.5
	Min Mz	STR 1/ 7	155.0	-9.6	16.4	0.2	-45.7	-90.8	45.7	90.8	101.7
	Min Mxy	STR 1/ 57	112.9	0.0	13.8	0.0	-34.7	0.0	34.7	0.0	34.7
	Min Mxz	STR 1/ 1	138.3	0.0	16.2	0.0	-39.6	0.0	39.6	0.0	39.6
	Min Myz	STR 1/ 57	112.9	0.0	13.8	0.0	-34.7	0.0	34.7	0.0	34.7
	Max Fx	STR 1/ 57	-108.8	0.0	-13.6	0.0	-82.9	0.0	82.9	0.0	82.9
	Max Fy	STR 1/ 7	-149.3	9.6	-16.1	-0.2	-93.0	8.2	93.0	8.2	93.4
	Max Fz	STR 1/ 57	-108.8	0.0	-13.6	0.0	-82.9	0.0	82.9	0.0	82.9
	Max Mx	STR 1/ 9	-148.5	8.4	-15.8	3.0	-90.8	10.2	90.8	10.6	91.3
	Max My	STR 1/ 167	-147.7	0.0	-14.9	0.0	-78.2	0.0	78.2	0.0	78.2
Load No.	Max Mz	STR 1/ 9	-148.5	8.4	-15.8	3.0	-90.8	10.2	90.8	10.6	91.3
6	Max Mxy	STR 1/ 46	-240.6	0.0	-21.7	0.0	-119.9	0.0	119.9	0.0	119.9
	Max Mxz	STR 1/ 9	-148.5	8.4	-15.8	3.0	-90.8	10.2	90.8	10.6	91.3
Member	Max Myz	STR 1/ 46	-240.6	0.0	-21.7	0.0	-119.9	0.0	119.9	0.0	119.9
747	Min Fx	STR 1/ 159	-283.6	0.0	-22.7	0.0	-112.0	0.0	112.0	0.0	112.0
	Min Fy	STR 1/ 1	-132.7	0.0	-16.0	0.0	-97.4	0.0	97.4	0.0	97.4
Joint	Min Fz	STR 1/ 155	-279.6	0.0	-22.8	0.0	-114.6	0.0	114.6	0.0	114.6
732	Min Mx	STR 1/ 8	-166.5	1.2	-16.7	-3.2	-90.9	-1.9	91.0	3.7	90.9
	Min My	STR 1/ 46	-240.6	0.0	-21.7	0.0	-119.9	0.0	119.9	0.0	119.9
	Min Mz	STR 1/ 8	-166.5	1.2	-16.7	-3.2	-90.9	-1.9	91.0	3.7	90.9
	Min Mxy	STR 1/ 167	-147.7	0.0	-14.9	0.0	-78.2	0.0	78.2	0.0	78.2
	Min Mxz	STR 1/ 1	-132.7	0.0	-16.0	0.0	-97.4	0.0	97.4	0.0	97.4
	Min Myz	STR 1/ 167	-147.7	0.0	-14.9	0.0	-78.2	0.0	78.2	0.0	78.2

	AASHTO Limit State: STR 1 - STRENGTH I											
	Max/ Min ID	**Combo ID**	**Fx (kips)**	**Fy (kips)**	**Fz (kips)**	**Mx (ft*kip)**	**My (ft*kip)**	**Mz (ft*kip)**	**Mxy (ft*kip)**	**Mxz (ft*kip)**	**Myz (ft*kip)**
	Max Fx	STR 1/ 171	-302.9	-2.6	7.7	16.3	-28.6	-44.6	32.9	47.5	53.0
	Max Fy	STR 1/ 1	-410.5	0.0	10.4	0.0	-41.8	0.0	41.8	0.0	41.8
	Max Fz	STR 1/ 46	-523.5	0.0	11.9	0.0	-50.4	0.0	50.4	0.0	50.4
	Max Mx	STR 1/ 7	-371.3	-3.5	9.7	18.6	-36.2	-48.8	40.7	52.2	60.8
	Max My	STR 1/ 168	-303.6	0.0	7.5	0.0	-28.1	0.0	28.1	0.0	28.1
Load No.	Max Mz	STR 1/ 1	-410.5	0.0	10.4	0.0	-41.8	0.0	41.8	0.0	41.8
7	Max Mxy	STR 1/ 46	-523.5	0.0	11.9	0.0	-50.4	0.0	50.4	0.0	50.4
	Max Mxz	STR 1/ 7	-371.3	-3.5	9.7	18.6	-36.2	-48.8	40.7	52.2	60.8
Member	Max Myz	STR 1/ 52	-484.3	-3.5	11.2	18.6	-44.8	-48.8	48.4	52.2	66.2
750	Min Fx	STR 1/ 46	-523.5	0.0	11.9	0.0	-50.4	0.0	50.4	0.0	50.4
	Min Fy	STR 1/ 7	-371.3	-3.5	9.7	18.6	-36.2	-48.8	40.7	52.2	60.8
Joint	Min Fz	STR 1/ 166	-311.7	0.0	7.5	0.0	-29.2	0.0	29.2	0.0	29.2
733	Min Mx	STR 1/ 1	-410.5	0.0	10.4	0.0	-41.8	0.0	41.8	0.0	41.8
	Min My	STR 1/ 46	-523.5	0.0	11.9	0.0	-50.4	0.0	50.4	0.0	50.4
	Min Mz	STR 1/ 7	-371.3	-3.5	9.7	18.6	-36.2	-48.8	40.7	52.2	60.8
	Min Mxy	STR 1/ 168	-303.6	0.0	7.5	0.0	-28.1	0.0	28.1	0.0	28.1
	Min Mxz	STR 1/ 1	-410.5	0.0	10.4	0.0	-41.8	0.0	41.8	0.0	41.8
	Min Myz	STR 1/ 168	-303.6	0.0	7.5	0.0	-28.1	0.0	28.1	0.0	28.1
	Max Fx	STR 1/ 46	530.2	0.0	-5.4	0.0	-71.5	0.0	71.5	0.0	71.5
	Max Fy	STR 1/ 7	378.0	3.5	-3.2	-18.6	-54.6	0.0	57.7	18.6	54.6
	Max Fz	STR 1/ 112	341.4	0.0	-2.5	0.0	-50.5	0.0	50.5	0.0	50.5
	Max Mx	STR 1/ 1	417.2	0.0	-3.9	0.0	-59.4	0.0	59.4	0.0	59.4
	Max My	STR 1/ 167	311.0	0.0	-2.9	0.0	-42.9	0.0	42.9	0.0	42.9
Load No.	Max Mz	STR 1/ 9	343.1	2.6	-2.9	-16.3	-53.4	6.7	55.8	17.6	53.8
8	Max Mxy	STR 1/ 46	530.2	0.0	-5.4	0.0	-71.5	0.0	71.5	0.0	71.5
	Max Mxz	STR 1/ 7	378.0	3.5	-3.2	-18.6	-54.6	0.0	57.7	18.6	54.6
Member	Max Myz	STR 1/ 46	530.2	0.0	-5.4	0.0	-71.5	0.0	71.5	0.0	71.5
750	Min Fx	STR 1/ 171	307.7	2.6	-3.0	-16.3	-45.9	6.7	48.7	17.6	46.4
	Min Fy	STR 1/ 1	417.2	0.0	-3.9	0.0	-59.4	0.0	59.4	0.0	59.4
Joint	Min Fz	STR 1/ 100	505.2	0.0	-5.7	0.0	-65.1	0.0	65.1	0.0	65.1
734	Min Mx	STR 1/ 7	378.0	3.5	-3.2	-18.6	-54.6	0.0	57.7	18.6	54.6
	Min My	STR 1/ 46	530.2	0.0	-5.4	0.0	-71.5	0.0	71.5	0.0	71.5
	Min Mz	STR 1/ 8	373.2	0.7	-2.9	-2.3	-51.5	-6.7	51.5	7.0	51.9
	Min Mxy	STR 1/ 167	311.0	0.0	-2.9	0.0	-42.9	0.0	42.9	0.0	42.9
	Min Mxz	STR 1/ 1	417.2	0.0	-3.9	0.0	-59.4	0.0	59.4	0.0	59.4
	Min Myz	STR 1/ 167	311.0	0.0	-2.9	0.0	-42.9	0.0	42.9	0.0	42.9

	AASHTO Limit State: STR 1 - STRENGTH I											
	Max/ Min ID	**Combo ID**	**Fx (kips)**	**Fy (kips)**	**Fz (kips)**	**Mx (ft*kip)**	**My (ft*kip)**	**Mz (ft*kip)**	**Mxy (ft*kip)**	**Mxz (ft*kip)**	**Myz (ft*kip)**
	Max Fx	STR 1/ 101	259.9	0.0	25.2	0.0	-101.8	0.0	101.8	0.0	101.8
	Max Fy	STR 1/ 1	138.8	0.0	21.0	0.0	-88.2	0.0	88.2	0.0	88.2
	Max Fz	STR 1/ 101	259.9	0.0	25.2	0.0	-101.8	0.0	101.8	0.0	101.8
	Max Mx	STR 1/ 7	133.9	-8.4	19.3	6.0	-80.0	-78.2	80.2	78.5	111.9
	Max My	STR 1/ 171	119.0	-7.0	16.8	3.0	-69.1	-68.6	69.2	68.7	97.4
Load No.	Max Mz	STR 1/ 1	138.8	0.0	21.0	0.0	-88.2	0.0	88.2	0.0	88.2
9	Max Mxy	STR 1/ 46	211.6	0.0	24.7	0.0	-103.3	0.0	103.3	0.0	103.3
	Max Mxz	STR 1/ 7	133.9	-8.4	19.3	6.0	-80.0	-78.2	80.2	78.5	111.9
Member	Max Myz	STR 1/ 52	206.7	-8.4	22.9	6.0	-95.1	-78.2	95.2	78.5	123.1
753	Min Fx	STR 1/ 111	89.7	0.0	16.5	0.0	-70.2	0.0	70.2	0.0	70.2
	Min Fy	STR 1/ 7	133.9	-8.4	19.3	6.0	-80.0	-78.2	80.2	78.5	111.9
Joint	Min Fz	STR 1/ 111	89.7	0.0	16.5	0.0	-70.2	0.0	70.2	0.0	70.2
735	Min Mx	STR 1/ 1	138.8	0.0	21.0	0.0	-88.2	0.0	88.2	0.0	88.2
	Min My	STR 1/ 46	211.6	0.0	24.7	0.0	-103.3	0.0	103.3	0.0	103.3
	Min Mz	STR 1/ 7	133.9	-8.4	19.3	6.0	-80.0	-78.2	80.2	78.5	111.9
	Min Mxy	STR 1/ 171	119.0	-7.0	16.8	3.0	-69.1	-68.6	69.2	68.7	97.4
	Min Mxz	STR 1/ 1	138.8	0.0	21.0	0.0	-88.2	0.0	88.2	0.0	88.2
	Min Myz	STR 1/ 168	141.5	0.0	17.2	0.0	-69.3	0.0	69.3	0.0	69.3
	Max Fx	STR 1/ 111	-84.7	0.0	-15.5	0.0	-52.2	0.0	52.2	0.0	52.2
	Max Fy	STR 1/ 7	-128.9	8.4	-18.3	-6.0	-63.1	14.4	63.3	15.5	64.7
	Max Fz	STR 1/ 111	-84.7	0.0	-15.5	0.0	-52.2	0.0	52.2	0.0	52.2
	Max Mx	STR 1/ 1	-133.8	0.0	-20.0	0.0	-69.0	0.0	69.0	0.0	69.0
	Max My	STR 1/ 111	-84.7	0.0	-15.5	0.0	-52.2	0.0	52.2	0.0	52.2
Load No.	Max Mz	STR 1/ 9	-104.9	7.0	-16.2	-3.0	-55.4	14.5	55.4	14.8	57.2
10	Max Mxy	STR 1/ 101	-256.3	0.0	-24.4	0.0	-87.7	0.0	87.7	0.0	87.7
	Max Mxz	STR 1/ 7	-128.9	8.4	-18.3	-6.0	-63.1	14.4	63.3	15.5	64.7
Member	Max Myz	STR 1/ 101	-256.3	0.0	-24.4	0.0	-87.7	0.0	87.7	0.0	87.7
753	Min Fx	STR 1/ 101	-256.3	0.0	-24.4	0.0	-87.7	0.0	87.7	0.0	87.7
	Min Fy	STR 1/ 1	-133.8	0.0	-20.0	0.0	-69.0	0.0	69.0	0.0	69.0
Joint	Min Fz	STR 1/ 101	-256.3	0.0	-24.4	0.0	-87.7	0.0	87.7	0.0	87.7
736	Min Mx	STR 1/ 7	-128.9	8.4	-18.3	-6.0	-63.1	14.4	63.3	15.5	64.7
	Min My	STR 1/ 101	-256.3	0.0	-24.4	0.0	-87.7	0.0	87.7	0.0	87.7
	Min Mz	STR 1/ 8	-148.0	1.2	-18.5	-3.2	-64.8	-0.2	64.9	3.2	64.8
	Min Mxy	STR 1/ 111	-84.7	0.0	-15.5	0.0	-52.2	0.0	52.2	0.0	52.2
	Min Mxz	STR 1/ 1	-133.8	0.0	-20.0	0.0	-69.0	0.0	69.0	0.0	69.0
	Min Myz	STR 1/ 111	-84.7	0.0	-15.5	0.0	-52.2	0.0	52.2	0.0	52.2

	AASHTO Limit State: STR 1 - STRENGTH I											
	Max/ Min ID	**Combo ID**	**Fx (kips)**	**Fy (kips)**	**Fz (kips)**	**Mx (ft*kip)**	**My (ft*kip)**	**Mz (ft*kip)**	**Mxy (ft*kip)**	**Mxz (ft*kip)**	**Myz (ft*kip)**
	Max Fx	STR 1/ 120	-120.4	0.0	3.9	0.0	12.3	0.0	12.3	0.0	12.3
	Max Fy	STR 1/ 1	-291.5	0.0	5.9	0.0	-8.7	0.0	8.7	0.0	8.7
	Max Fz	STR 1/ 29	-350.2	0.0	7.3	0.0	-19.8	0.0	19.8	0.0	19.8
	Max Mx	STR 1/ 7	-236.5	-2.1	5.4	15.9	-5.0	-34.1	16.7	37.7	34.5
	Max My	STR 1/ 129	-122.2	0.0	3.9	0.0	12.9	0.0	12.9	0.0	12.9
Load No.	Max Mz	STR 1/ 1	-291.5	0.0	5.9	0.0	-8.7	0.0	8.7	0.0	8.7
11	Max Mxy	STR 1/ 83	-388.5	0.0	7.2	0.0	-28.4	0.0	28.4	0.0	28.4
	Max Mxz	STR 1/ 7	-236.5	-2.1	5.4	15.9	-5.0	-34.1	16.7	37.7	34.5
Member	Max Myz	STR 1/ 88	-310.6	-2.1	5.8	15.9	-15.8	-34.1	22.4	37.7	37.6
756	Min Fx	STR 1/ 83	-388.5	0.0	7.2	0.0	-28.4	0.0	28.4	0.0	28.4
	Min Fy	STR 1/ 7	-236.5	-2.1	5.4	15.9	-5.0	-34.1	16.7	37.7	34.5
Joint	Min Fz	STR 1/ 174	-158.7	0.0	3.8	0.0	3.8	0.0	3.8	0.0	3.8
737	Min Mx	STR 1/ 1	-291.5	0.0	5.9	0.0	-8.7	0.0	8.7	0.0	8.7
	Min My	STR 1/ 83	-388.5	0.0	7.2	0.0	-28.4	0.0	28.4	0.0	28.4
	Min Mz	STR 1/ 7	-236.5	-2.1	5.4	15.9	-5.0	-34.1	16.7	37.7	34.5
	Min Mxy	STR 1/ 157	-195.6	0.0	5.5	0.0	0.0	0.0	0.0	0.0	0.0
	Min Mxz	STR 1/ 1	-291.5	0.0	5.9	0.0	-8.7	0.0	8.7	0.0	8.7
	Min Myz	STR 1/ 157	-195.6	0.0	5.5	0.0	0.0	0.0	0.0	0.0	0.0
	Max Fx	STR 1/ 83	393.1	0.0	-2.1	0.0	-38.9	0.0	38.9	0.0	38.9
	Max Fy	STR 1/ 7	242.9	2.1	1.6	-15.9	-24.0	4.6	28.8	16.6	24.4
	Max Fz	STR 1/ 120	126.7	0.0	3.1	0.0	-18.0	0.0	18.0	0.0	18.0
	Max Mx	STR 1/ 1	297.8	0.0	1.1	0.0	-26.3	0.0	26.3	0.0	26.3
	Max My	STR 1/ 111	150.6	0.0	2.9	0.0	-17.1	0.0	17.1	0.0	17.1
Load No.	Max Mz	STR 1/ 9	176.6	1.4	2.5	-13.0	-19.6	8.9	23.5	15.7	21.5
12	Max Mxy	STR 1/ 101	371.0	0.0	-2.0	0.0	-41.5	0.0	41.5	0.0	41.5
	Max Mxz	STR 1/ 7	242.9	2.1	1.6	-15.9	-24.0	4.6	28.8	16.6	24.4
Member	Max Myz	STR 1/ 101	371.0	0.0	-2.0	0.0	-41.5	0.0	41.5	0.0	41.5
756	Min Fx	STR 1/ 120	126.7	0.0	3.1	0.0	-18.0	0.0	18.0	0.0	18.0
	Min Fy	STR 1/ 1	297.8	0.0	1.1	0.0	-26.3	0.0	26.3	0.0	26.3
Joint	Min Fz	STR 1/ 83	393.1	0.0	-2.1	0.0	-38.9	0.0	38.9	0.0	38.9
738	Min Mx	STR 1/ 7	242.9	2.1	1.6	-15.9	-24.0	4.6	28.8	16.6	24.4
	Min My	STR 1/ 101	371.0	0.0	-2.0	0.0	-41.5	0.0	41.5	0.0	41.5
	Min Mz	STR 1/ 8	254.4	0.7	1.1	-3.0	-26.1	-4.4	26.2	5.3	26.4
	Min Mxy	STR 1/ 111	150.6	0.0	2.9	0.0	-17.1	0.0	17.1	0.0	17.1
	Min Mxz	STR 1/ 1	297.8	0.0	1.1	0.0	-26.3	0.0	26.3	0.0	26.3
	Min Myz	STR 1/ 111	150.6	0.0	2.9	0.0	-17.1	0.0	17.1	0.0	17.1

	AASHTO Limit State: STR 1 - STRENGTH I											
	Max/ Min ID	**Combo ID**	**Fx (kips)**	**Fy (kips)**	**Fz (kips)**	**Mx (ft*kip)**	**My (ft*kip)**	**Mz (ft*kip)**	**Mxy (ft*kip)**	**Mxz (ft*kip)**	**Myz (ft*kip)**
	Max Fx	STR 1/ 83	138.0	0.0	19.2	0.0	-71.0	0.0	71.0	0.0	71.0
	Max Fy	STR 1/ 1	-34.0	0.0	11.2	0.0	-41.7	0.0	41.7	0.0	41.7
	Max Fz	STR 1/ 83	138.0	0.0	19.2	0.0	-71.0	0.0	71.0	0.0	71.0
	Max Mx	STR 1/ 7	-35.9	-6.3	9.3	7.9	-34.5	-57.8	35.4	58.3	67.3
	Max My	STR 1/ 129	-139.2	0.0	0.5	0.0	-4.4	0.0	4.4	0.0	4.4
Load No.	Max Mz	STR 1/ 1	-34.0	0.0	11.2	0.0	-41.7	0.0	41.7	0.0	41.7
13	Max Mxy	STR 1/ 83	138.0	0.0	19.2	0.0	-71.0	0.0	71.0	0.0	71.0
	Max Mxz	STR 1/ 7	-35.9	-6.3	9.3	7.9	-34.5	-57.8	35.4	58.3	67.3
Member	Max Myz	STR 1/ 88	49.8	-6.3	13.6	7.9	-51.2	-57.8	51.8	58.3	77.2
759	Min Fx	STR 1/ 120	-140.6	0.0	1.0	0.0	-5.9	0.0	5.9	0.0	5.9
	Min Fy	STR 1/ 7	-35.9	-6.3	9.3	7.9	-34.5	-57.8	35.4	58.3	67.3
Joint	Min Fz	STR 1/ 129	-139.2	0.0	0.5	0.0	-4.4	0.0	4.4	0.0	4.4
739	Min Mx	STR 1/ 1	-34.0	0.0	11.2	0.0	-41.7	0.0	41.7	0.0	41.7
	Min My	STR 1/ 83	138.0	0.0	19.2	0.0	-71.0	0.0	71.0	0.0	71.0
	Min Mz	STR 1/ 7	-35.9	-6.3	9.3	7.9	-34.5	-57.8	35.4	58.3	67.3
	Min Mxy	STR 1/ 129	-139.2	0.0	0.5	0.0	-4.4	0.0	4.4	0.0	4.4
	Min Mxz	STR 1/ 1	-34.0	0.0	11.2	0.0	-41.7	0.0	41.7	0.0	41.7
	Min Myz	STR 1/ 129	-139.2	0.0	0.5	0.0	-4.4	0.0	4.4	0.0	4.4
	Max Fx	STR 1/ 120	145.0	0.0	0.5	0.0	4.2	0.0	4.2	0.0	4.2
	Max Fy	STR 1/ 7	40.3	6.3	-7.8	-7.9	-25.4	13.3	26.6	15.5	28.7
	Max Fz	STR 1/ 129	143.6	0.0	1.0	0.0	6.6	0.0	6.6	0.0	6.6
	Max Mx	STR 1/ 1	38.3	0.0	-9.7	0.0	-31.9	0.0	31.9	0.0	31.9
	Max My	STR 1/ 129	143.6	0.0	1.0	0.0	6.6	0.0	6.6	0.0	6.6
Load No.	Max Mz	STR 1/ 7	40.3	6.3	-7.8	-7.9	-25.4	13.3	26.6	15.5	28.7
14	Max Mxy	STR 1/ 56	-115.0	0.0	-17.7	0.0	-59.7	0.0	59.7	0.0	59.7
	Max Mxz	STR 1/ 7	40.3	6.3	-7.8	-7.9	-25.4	13.3	26.6	15.5	28.7
Member	Max Myz	STR 1/ 56	-115.0	0.0	-17.7	0.0	-59.7	0.0	59.7	0.0	59.7
759	Min Fx	STR 1/ 83	-134.9	0.0	-18.1	0.0	-59.7	0.0	59.7	0.0	59.7
	Min Fy	STR 1/ 1	38.3	0.0	-9.7	0.0	-31.9	0.0	31.9	0.0	31.9
Joint	Min Fz	STR 1/ 83	-134.9	0.0	-18.1	0.0	-59.7	0.0	59.7	0.0	59.7
740	Min Mx	STR 1/ 7	40.3	6.3	-7.8	-7.9	-25.4	13.3	26.6	15.5	28.7
	Min My	STR 1/ 56	-115.0	0.0	-17.7	0.0	-59.7	0.0	59.7	0.0	59.7
	Min Mz	STR 1/ 1	38.3	0.0	-9.7	0.0	-31.9	0.0	31.9	0.0	31.9
	Min Mxy	STR 1/ 12	144.5	0.0	-0.1	0.0	2.4	0.0	2.4	0.0	2.4
	Min Mxz	STR 1/ 1	38.3	0.0	-9.7	0.0	-31.9	0.0	31.9	0.0	31.9
	Min Myz	STR 1/ 12	144.5	0.0	-0.1	0.0	2.4	0.0	2.4	0.0	2.4

	AASHTO Limit State: STR 1 - STRENGTH I											
	Max/ Min ID	**Combo ID**	**Fx (kips)**	**Fy (kips)**	**Fz (kips)**	**Mx (ft*kip)**	**My (ft*kip)**	**Mz (ft*kip)**	**Mxy (ft*kip)**	**Mxz (ft*kip)**	**Myz (ft*kip)**
	Max Fx	STR 1/ 156	364.1	0.0	-3.6	0.0	83.2	0.0	83.2	0.0	83.2
	Max Fy	STR 1/ 1	-14.9	0.0	2.3	0.0	27.7	0.0	27.7	0.0	27.7
	Max Fz	STR 1/ 56	-219.2	0.0	5.3	0.0	-9.3	0.0	9.3	0.0	9.3
	Max Mx	STR 1/ 7	30.1	-0.7	1.8	10.0	30.3	-17.5	31.9	20.1	35.0
	Max My	STR 1/ 156	364.1	0.0	-3.6	0.0	83.2	0.0	83.2	0.0	83.2
Load No.	Max Mz	STR 1/ 1	-14.9	0.0	2.3	0.0	27.7	0.0	27.7	0.0	27.7
15	Max Mxy	STR 1/ 156	364.1	0.0	-3.6	0.0	83.2	0.0	83.2	0.0	83.2
	Max Mxz	STR 1/ 7	30.1	-0.7	1.8	10.0	30.3	-17.5	31.9	20.1	35.0
Member	Max Myz	STR 1/ 156	364.1	0.0	-3.6	0.0	83.2	0.0	83.2	0.0	83.2
762	Min Fx	STR 1/ 56	-219.2	0.0	5.3	0.0	-9.3	0.0	9.3	0.0	9.3
	Min Fy	STR 1/ 7	30.1	-0.7	1.8	10.0	30.3	-17.5	31.9	20.1	35.0
Joint	Min Fz	STR 1/ 156	364.1	0.0	-3.6	0.0	83.2	0.0	83.2	0.0	83.2
741	Min Mx	STR 1/ 1	-14.9	0.0	2.3	0.0	27.7	0.0	27.7	0.0	27.7
	Min My	STR 1/ 56	-219.2	0.0	5.3	0.0	-9.3	0.0	9.3	0.0	9.3
	Min Mz	STR 1/ 7	30.1	-0.7	1.8	10.0	30.3	-17.5	31.9	20.1	35.0
	Min Mxy	STR 1/ 83	-157.5	0.0	4.2	0.0	3.4	0.0	3.4	0.0	3.4
	Min Mxz	STR 1/ 1	-14.9	0.0	2.3	0.0	27.7	0.0	27.7	0.0	27.7
	Min Myz	STR 1/ 83	-157.5	0.0	4.2	0.0	3.4	0.0	3.4	0.0	3.4
	Max Fx	STR 1/ 56	223.6	0.0	-0.2	0.0	-29.4	0.0	29.4	0.0	29.4
	Max Fy	STR 1/ 7	-24.0	0.7	5.4	-10.0	-5.3	6.1	11.3	11.7	8.1
	Max Fz	STR 1/ 156	-358.0	0.0	10.7	0.0	17.6	0.0	17.6	0.0	17.6
	Max Mx	STR 1/ 1	21.0	0.0	4.9	0.0	-8.8	0.0	8.8	0.0	8.8
	Max My	STR 1/ 156	-358.0	0.0	10.7	0.0	17.6	0.0	17.6	0.0	17.6
Load No.	Max Mz	STR 1/ 9	-115.0	0.0	6.6	-6.0	2.8	9.3	6.6	11.0	9.7
16	Max Mxy	STR 1/ 56	223.6	0.0	-0.2	0.0	-29.4	0.0	29.4	0.0	29.4
	Max Mxz	STR 1/ 7	-24.0	0.7	5.4	-10.0	-5.3	6.1	11.3	11.7	8.1
Member	Max Myz	STR 1/ 56	223.6	0.0	-0.2	0.0	-29.4	0.0	29.4	0.0	29.4
762	Min Fx	STR 1/ 156	-358.0	0.0	10.7	0.0	17.6	0.0	17.6	0.0	17.6
	Min Fy	STR 1/ 1	21.0	0.0	4.9	0.0	-8.8	0.0	8.8	0.0	8.8
Joint	Min Fz	STR 1/ 56	223.6	0.0	-0.2	0.0	-29.4	0.0	29.4	0.0	29.4
742	Min Mx	STR 1/ 7	-24.0	0.7	5.4	-10.0	-5.3	6.1	11.3	11.7	8.1
	Min My	STR 1/ 56	223.6	0.0	-0.2	0.0	-29.4	0.0	29.4	0.0	29.4
	Min Mz	STR 1/ 8	22.4	0.7	4.3	-4.2	-9.8	-3.2	10.7	5.3	10.3
	Min Mxy	STR 1/ 114	-87.9	0.0	6.0	0.0	-0.1	0.0	0.1	0.0	0.1
	Min Mxz	STR 1/ 1	21.0	0.0	4.9	0.0	-8.8	0.0	8.8	0.0	8.8
	Min Myz	STR 1/ 114	-87.9	0.0	6.0	0.0	-0.1	0.0	0.1	0.0	0.1

	AASHTO Limit State: STR 1 - STRENGTH I											
	Max/ Min ID	**Combo ID**	**Fx (kips)**	**Fy (kips)**	**Fz (kips)**	**Mx (ft*kip)**	**My (ft*kip)**	**Mz (ft*kip)**	**Mxy (ft*kip)**	**Mxz (ft*kip)**	**Myz (ft*kip)**
	Max Fx	STR 1/ 56	109.0	0.0	14.3	0.0	-38.7	0.1	38.7	0.1	38.7
	Max Fy	STR 1/ 1	-73.0	0.0	1.5	0.0	15.0	0.1	15.0	0.1	15.0
	Max Fz	STR 1/ 56	109.0	0.0	14.3	0.0	-38.7	0.1	38.7	0.1	38.7
	Max Mx	STR 1/ 7	-86.0	-3.3	-0.1	5.4	19.9	-30.2	20.6	30.6	36.1
	Max My	STR 1/ 156	-280.4	0.0	-21.3	0.0	101.4	0.1	101.4	0.1	101.4
Load No.	Max Mz	STR 1/ 1	-73.0	0.0	1.5	0.0	15.0	0.1	15.0	0.1	15.0
17	Max Mxy	STR 1/ 156	-280.4	0.0	-21.3	0.0	101.4	0.1	101.4	0.1	101.4
	Max Mxz	STR 1/ 61	3.0	-3.3	6.6	5.4	-7.9	-30.2	9.5	30.7	31.2
Member	Max Myz	STR 1/ 156	-280.4	0.0	-21.3	0.0	101.4	0.1	101.4	0.1	101.4
765	Min Fx	STR 1/ 156	-280.4	0.0	-21.3	0.0	101.4	0.1	101.4	0.1	101.4
	Min Fy	STR 1/ 7	-86.0	-3.3	-0.1	5.4	19.9	-30.2	20.6	30.6	36.1
Joint	Min Fz	STR 1/ 156	-280.4	0.0	-21.3	0.0	101.4	0.1	101.4	0.1	101.4
743	Min Mx	STR 1/ 1	-73.0	0.0	1.5	0.0	15.0	0.1	15.0	0.1	15.0
	Min My	STR 1/ 56	109.0	0.0	14.3	0.0	-38.7	0.1	38.7	0.1	38.7
	Min Mz	STR 1/ 61	3.0	-3.3	6.6	5.4	-7.9	-30.2	9.5	30.7	31.2
	Min Mxy	STR 1/ 168	-16.4	0.0	4.4	0.0	-0.1	0.1	0.1	0.1	0.1
	Min Mxz	STR 1/ 55	15.9	0.0	8.1	0.0	-12.8	0.1	12.8	0.1	12.8
	Min Myz	STR 1/ 168	-16.4	0.0	4.4	0.0	-0.1	0.1	0.1	0.1	0.1
	Max Fx	STR 1/ 156	284.3	0.0	23.1	0.0	44.1	0.0	44.1	0.0	44.1
	Max Fy	STR 1/ 7	89.9	3.3	1.8	-5.4	-13.4	8.8	14.4	10.3	16.0
	Max Fz	STR 1/ 156	284.3	0.0	23.1	0.0	44.1	0.0	44.1	0.0	44.1
	Max Mx	STR 1/ 1	76.9	0.0	0.2	0.0	-18.4	0.0	18.4	0.0	18.4
	Max My	STR 1/ 156	284.3	0.0	23.1	0.0	44.1	0.0	44.1	0.0	44.1
Load No.	Max Mz	STR 1/ 7	89.9	3.3	1.8	-5.4	-13.4	8.8	14.4	10.3	16.0
18	Max Mxy	STR 1/ 56	-106.2	0.0	-13.0	0.0	-50.0	0.0	50.0	0.0	50.0
	Max Mxz	STR 1/ 7	89.9	3.3	1.8	-5.4	-13.4	8.8	14.4	10.3	16.0
Member	Max Myz	STR 1/ 56	-106.2	0.0	-13.0	0.0	-50.0	0.0	50.0	0.0	50.0
765	Min Fx	STR 1/ 56	-106.2	0.0	-13.0	0.0	-50.0	0.0	50.0	0.0	50.0
	Min Fy	STR 1/ 1	76.9	0.0	0.2	0.0	-18.4	0.0	18.4	0.0	18.4
Joint	Min Fz	STR 1/ 56	-106.2	0.0	-13.0	0.0	-50.0	0.0	50.0	0.0	50.0
744	Min Mx	STR 1/ 7	89.9	3.3	1.8	-5.4	-13.4	8.8	14.4	10.3	16.0
	Min My	STR 1/ 56	-106.2	0.0	-13.0	0.0	-50.0	0.0	50.0	0.0	50.0
	Min Mz	STR 1/ 1	76.9	0.0	0.2	0.0	-18.4	0.0	18.4	0.0	18.4
	Min Mxy	STR 1/ 100	71.9	0.0	6.3	0.0	0.9	0.0	0.9	0.0	0.9
	Min Mxz	STR 1/ 1	76.9	0.0	0.2	0.0	-18.4	0.0	18.4	0.0	18.4
	Min Myz	STR 1/ 100	71.9	0.0	6.3	0.0	0.9	0.0	0.9	0.0	0.9

	AASHTO Limit State: STR 1 - STRENGTH I											
	Max/ Min ID	**Combo ID**	**Fx (kips)**	**Fy (kips)**	**Fz (kips)**	**Mx (ft*kip)**	**My (ft*kip)**	**Mz (ft*kip)**	**Mxy (ft*kip)**	**Mxz (ft*kip)**	**Myz (ft*kip)**
	Max Fx	STR 1/ 156	1010.4	0.0	-1.7	0.0	86.8	0.1	86.8	0.1	86.8
	Max Fy	STR 1/ 9	395.9	1.8	4.3	-5.3	10.2	19.4	11.5	20.1	21.9
	Max Fz	STR 1/ 56	-103.1	0.0	8.2	0.0	-46.3	0.1	46.3	0.1	46.3
	Max Mx	STR 1/ 8	199.7	-1.1	6.4	6.0	-12.2	-13.2	13.6	14.5	17.9
	Max My	STR 1/ 156	1010.4	0.0	-1.7	0.0	86.8	0.1	86.8	0.1	86.8
Load No.	Max Mz	STR 1/ 9	395.9	1.8	4.3	-5.3	10.2	19.4	11.5	20.1	21.9
19	Max Mxy	STR 1/ 156	1010.4	0.0	-1.7	0.0	86.8	0.1	86.8	0.1	86.8
	Max Mxz	STR 1/ 9	395.9	1.8	4.3	-5.3	10.2	19.4	11.5	20.1	21.9
Member	Max Myz	STR 1/ 156	1010.4	0.0	-1.7	0.0	86.8	0.1	86.8	0.1	86.8
768	Min Fx	STR 1/ 56	-103.1	0.0	8.2	0.0	-46.3	0.1	46.3	0.1	46.3
	Min Fy	STR 1/ 8	199.7	-1.1	6.4	6.0	-12.2	-13.2	13.6	14.5	17.9
Joint	Min Fz	STR 1/ 156	1010.4	0.0	-1.7	0.0	86.8	0.1	86.8	0.1	86.8
745	Min Mx	STR 1/ 9	395.9	1.8	4.3	-5.3	10.2	19.4	11.5	20.1	21.9
	Min My	STR 1/ 56	-103.1	0.0	8.2	0.0	-46.3	0.1	46.3	0.1	46.3
	Min Mz	STR 1/ 62	18.8	-1.1	6.8	6.0	-28.7	-13.2	29.3	14.5	31.6
	Min Mxy	STR 1/ 190	321.7	0.0	4.4	0.0	0.8	0.1	0.8	0.1	0.8
	Min Mxz	STR 1/ 55	45.4	0.0	7.3	0.0	-36.4	0.1	36.4	0.1	36.4
	Min Myz	STR 1/ 190	321.7	0.0	4.4	0.0	0.8	0.1	0.8	0.1	0.8
	Max Fx	STR 1/ 56	107.8	0.0	-2.1	0.0	-40.0	0.0	40.0	0.0	40.0
	Max Fy	STR 1/ 8	-193.1	1.1	2.1	-6.0	-23.7	-2.6	24.4	6.5	23.8
	Max Fz	STR 1/ 156	-1003.7	0.0	10.2	0.0	11.1	0.0	11.1	0.0	11.1
	Max Mx	STR 1/ 9	-389.3	-1.8	4.2	5.3	-13.4	10.2	14.3	11.4	16.8
	Max My	STR 1/ 156	-1003.7	0.0	10.2	0.0	11.1	0.0	11.1	0.0	11.1
Load No.	Max Mz	STR 1/ 9	-389.3	-1.8	4.2	5.3	-13.4	10.2	14.3	11.4	16.8
20	Max Mxy	STR 1/ 56	107.8	0.0	-2.1	0.0	-40.0	0.0	40.0	0.0	40.0
	Max Mxz	STR 1/ 9	-389.3	-1.8	4.2	5.3	-13.4	10.2	14.3	11.4	16.8
Member	Max Myz	STR 1/ 56	107.8	0.0	-2.1	0.0	-40.0	0.0	40.0	0.0	40.0
768	Min Fx	STR 1/ 156	-1003.7	0.0	10.2	0.0	11.1	0.0	11.1	0.0	11.1
	Min Fy	STR 1/ 9	-389.3	-1.8	4.2	5.3	-13.4	10.2	14.3	11.4	16.8
Joint	Min Fz	STR 1/ 56	107.8	0.0	-2.1	0.0	-40.0	0.0	40.0	0.0	40.0
746	Min Mx	STR 1/ 8	-193.1	1.1	2.1	-6.0	-23.7	-2.6	24.4	6.5	23.8
	Min My	STR 1/ 56	107.8	0.0	-2.1	0.0	-40.0	0.0	40.0	0.0	40.0
	Min Mz	STR 1/ 8	-193.1	1.1	2.1	-6.0	-23.7	-2.6	24.4	6.5	23.8
	Min Mxy	STR 1/ 149	-738.3	0.0	8.1	0.0	0.1	0.0	0.1	0.0	0.1
	Min Mxz	STR 1/ 1	-219.7	0.0	1.6	0.0	-25.6	0.0	25.6	0.0	25.6
	Min Myz	STR 1/ 149	-738.3	0.0	8.1	0.0	0.1	0.0	0.1	0.0	0.1

	AASHTO Limit State: STR 1 - STRENGTH I											
	Max/ Min ID	**Combo ID**	**Fx (kips)**	**Fy (kips)**	**Fz (kips)**	**Mx (ft*kip)**	**My (ft*kip)**	**Mz (ft*kip)**	**Mxy (ft*kip)**	**Mxz (ft*kip)**	**Myz (ft*kip)**
	Max Fx	STR 1/ 159	89.2	0.0	92.9	-0.1	-565.0	-0.4	565.0	0.4	565.0
	Max Fy	STR 1/ 8	63.1	4.7	31.2	2.5	50.8	57.9	50.8	57.9	77.0
	Max Fz	STR 1/ 156	85.3	0.0	95.2	-0.1	-584.4	-0.6	584.4	0.6	584.4
	Max Mx	STR 1/ 62	42.4	4.7	18.1	2.5	162.2	58.0	162.2	58.0	172.3
	Max My	STR 1/ 56	39.2	0.0	7.0	-0.1	272.1	0.1	272.1	0.1	272.1
Load No.	Max Mz	STR 1/ 62	42.4	4.7	18.1	2.5	162.2	58.0	162.2	58.0	172.3
21	Max Mxy	STR 1/ 156	85.3	0.0	95.2	-0.1	-584.4	-0.6	584.4	0.6	584.4
	Max Mxz	STR 1/ 45	80.9	-7.9	82.2	-4.0	-461.7	-90.7	461.7	90.8	470.5
Member	Max Myz	STR 1/ 156	85.3	0.0	95.2	-0.1	-584.4	-0.6	584.4	0.6	584.4
771	Min Fx	STR 1/ 56	39.2	0.0	7.0	-0.1	272.1	0.1	272.1	0.1	272.1
	Min Fy	STR 1/ 9	67.6	-7.9	44.9	-4.0	-79.8	-90.5	79.9	90.6	120.7
Joint	Min Fz	STR 1/ 56	39.2	0.0	7.0	-0.1	272.1	0.1	272.1	0.1	272.1
747	Min Mx	STR 1/ 9	67.6	-7.9	44.9	-4.0	-79.8	-90.5	79.9	90.6	120.7
	Min My	STR 1/ 156	85.3	0.0	95.2	-0.1	-584.4	-0.6	584.4	0.6	584.4
	Min Mz	STR 1/ 45	80.9	-7.9	82.2	-4.0	-461.7	-90.7	461.7	90.8	470.5
	Min Mxy	STR 1/ 82	49.8	0.0	34.3	-0.1	-0.2	-0.2	0.2	0.2	0.3
	Min Mxz	STR 1/ 65	44.4	0.0	22.5	-0.1	121.0	0.0	121.0	0.1	121.0
	Min Myz	STR 1/ 82	49.8	0.0	34.3	-0.1	-0.2	-0.2	0.2	0.2	0.3
	Max Fx	STR 1/ 56	-30.0	0.0	-7.0	0.1	-363.8	0.0	363.8	0.1	363.8
	Max Fy	STR 1/ 9	-54.9	7.9	-44.9	4.0	-503.7	-12.1	503.7	12.7	503.8
	Max Fz	STR 1/ 56	-30.0	0.0	-7.0	0.1	-363.8	0.0	363.8	0.1	363.8
	Max Mx	STR 1/ 9	-54.9	7.9	-44.9	4.0	-503.7	-12.1	503.7	12.7	503.8
	Max My	STR 1/ 56	-30.0	0.0	-7.0	0.1	-363.8	0.0	363.8	0.1	363.8
Load No.	Max Mz	STR 1/ 8	-50.3	-4.7	-31.2	-2.5	-456.3	2.8	456.3	3.8	456.3
22	Max Mxy	STR 1/ 156	-72.6	0.0	-95.2	0.1	-650.0	-0.1	650.0	0.2	650.0
	Max Mxz	STR 1/ 36	-63.0	7.9	-66.7	4.0	-555.1	-12.2	555.1	12.8	555.2
Member	Max Myz	STR 1/ 156	-72.6	0.0	-95.2	0.1	-650.0	-0.1	650.0	0.2	650.0
771	Min Fx	STR 1/ 159	-76.4	0.0	-92.9	0.1	-640.9	-0.1	640.9	0.2	640.9
	Min Fy	STR 1/ 8	-50.3	-4.7	-31.2	-2.5	-456.3	2.8	456.3	3.8	456.3
Joint	Min Fz	STR 1/ 156	-72.6	0.0	-95.2	0.1	-650.0	-0.1	650.0	0.2	650.0
748	Min Mx	STR 1/ 62	-33.2	-4.7	-18.1	-2.5	-397.1	2.8	397.1	3.8	397.1
	Min My	STR 1/ 156	-72.6	0.0	-95.2	0.1	-650.0	-0.1	650.0	0.2	650.0
	Min Mz	STR 1/ 36	-63.0	7.9	-66.7	4.0	-555.1	-12.2	555.1	12.8	555.2
	Min Mxy	STR 1/ 56	-30.0	0.0	-7.0	0.1	-363.8	0.0	363.8	0.1	363.8
	Min Mxz	STR 1/ 55	-32.5	0.0	-12.5	0.1	-392.3	0.0	392.3	0.1	392.3
	Min Myz	STR 1/ 56	-30.0	0.0	-7.0	0.1	-363.8	0.0	363.8	0.1	363.8

Limit State: STRENGTH I

FR Friction
LF: 1
FR1: CR+SH+PT_EOC
FR2: CR+SH+PT_D10K

TU Uniform Temperature
LF: 0.5
TU1: TU-
TU2: TU+
TU3: TU+Temp. Diff.

DW DL Wearing Surfaces & Utilities
LF1: 1.5
LF2: 0.65
DW1: DW

LL Vehicular Live Load
LF: 1.75
LL1: LL1_Deck
LL2: LL2_Deck
LL3: LL3_Deck
LL4: LL1_Roof
LL5: LL2_Roof
LL6: LL3_Roof
LL7: LL1_Deck Offset
LL8: LL2_Deck Offset
LL9: LL3_Deck Offset

DC DL Structural Components & Attachments
LF1: 1.25
LF2: 0.9
DC1: DC

Combo ID	Load Combinations
STR 1/ 1	1.00*(DW1*1.50 + DC1*1.25 + FR1*1.00 + TU1*0.50 + LL1*1.75)
STR 1/ 2	1.00*(DW1*1.50 + DC1*1.25 + FR1*1.00 + TU1*0.50 + LL2*1.75)
STR 1/ 3	1.00*(DW1*1.50 + DC1*1.25 + FR1*1.00 + TU1*0.50 + LL3*1.75)
STR 1/ 4	1.00*(DW1*1.50 + DC1*1.25 + FR1*1.00 + TU1*0.50 + LL4*1.75)
STR 1/ 5	1.00*(DW1*1.50 + DC1*1.25 + FR1*1.00 + TU1*0.50 + LL5*1.75)
STR 1/ 6	1.00*(DW1*1.50 + DC1*1.25 + FR1*1.00 + TU1*0.50 + LL6*1.75)
STR 1/ 7	1.00*(DW1*1.50 + DC1*1.25 + FR1*1.00 + TU1*0.50 + LL7*1.75)
STR 1/ 8	1.00*(DW1*1.50 + DC1*1.25 + FR1*1.00 + TU1*0.50 + LL8*1.75)
STR 1/ 9	1.00*(DW1*1.50 + DC1*1.25 + FR1*1.00 + TU1*0.50 + LL9*1.75)
STR 1/ 10	1.00*(DW1*1.50 + DC1*1.25 + FR1*1.00 + TU2*0.50 + LL1*1.75)
STR 1/ 11	1.00*(DW1*1.50 + DC1*1.25 + FR1*1.00 + TU2*0.50 + LL2*1.75)
STR 1/ 12	1.00*(DW1*1.50 + DC1*1.25 + FR1*1.00 + TU2*0.50 + LL3*1.75)
STR 1/ 13	1.00*(DW1*1.50 + DC1*1.25 + FR1*1.00 + TU2*0.50 + LL4*1.75)
STR 1/ 14	1.00*(DW1*1.50 + DC1*1.25 + FR1*1.00 + TU2*0.50 + LL5*1.75)
STR 1/ 15	1.00*(DW1*1.50 + DC1*1.25 + FR1*1.00 + TU2*0.50 + LL6*1.75)
STR 1/ 16	1.00*(DW1*1.50 + DC1*1.25 + FR1*1.00 + TU2*0.50 + LL7*1.75)
STR 1/ 17	1.00*(DW1*1.50 + DC1*1.25 + FR1*1.00 + TU2*0.50 + LL8*1.75)
STR 1/ 18	1.00*(DW1*1.50 + DC1*1.25 + FR1*1.00 + TU2*0.50 + LL9*1.75)
STR 1/ 19	1.00*(DW1*1.50 + DC1*1.25 + FR1*1.00 + TU3*0.50 + LL1*1.75)
STR 1/ 20	1.00*(DW1*1.50 + DC1*1.25 + FR1*1.00 + TU3*0.50 + LL2*1.75)

Limit State: STRENGTH I

FR Friction
LF: 1
FR1: CR+SH+PT_EOC
FR2: CR+SH+PT_D10K

TU Uniform Temperature
LF: 0.5
TU1: TU-
TU2: TU+
TU3: TU+Temp. Diff.

DW DL Wearing Surfaces & Utilities
LF1: 1.5
LF2: 0.65
DW1: DW

LL Vehicular Live Load
LF: 1.75
LL1: LL1_Deck
LL2: LL2_Deck
LL3: LL3_Deck
LL4: LL1_Roof
LL5: LL2_Roof
LL6: LL3_Roof
LL7: LL1_Deck Offset
LL8: LL2_Deck Offset
LL9: LL3_Deck Offset

DC DL Structural Components & Attachments
LF1: 1.25
LF2: 0.9
DC1: DC

Load (Row) Number	User's Load ID	Member ID	Joint ID	Fx (kips)	Fy (kips)	Fz (kips)	Mx (ft*kip)	My (ft*kip)	Mz (ft*kip)
1	CR+SH+PT_D10K	741	727	134.9	0	-1.8	0	27.1	0
2	CR+SH+PT_D10K	741	728	-134.9	0	1.8	0	14.2	0
3	CR+SH+PT_D10K	744	729	-207.1	0	1.5	0	-11.8	0
4	CR+SH+PT_D10K	744	730	207.1	0	-1.5	0	-9.9	0
5	CR+SH+PT_D10K	747	731	139.6	0	13.9	0	-55.7	0
6	CR+SH+PT_D10K	747	732	-139.6	0	-13.9	0	-63.2	0
7	CR+SH+PT_D10K	750	733	-300.6	0	4.3	0	-29.1	0
8	CR+SH+PT_D10K	750	734	300.6	0	-4.3	0	-31.8	0
9	CR+SH+PT_D10K	753	735	208.6	0	19.6	0	-75.9	0
10	CR+SH+PT_D10K	753	736	-208.6	0	-19.6	0	-73.5	0
11	CR+SH+PT_D10K	756	737	-316.8	0	4.9	0	-30.7	0
12	CR+SH+PT_D10K	756	738	316.8	0	-4.9	0	-39.6	0
13	CR+SH+PT_D10K	759	739	208.2	0	19.7	0	-72.5	0
14	CR+SH+PT_D10K	759	740	-208.2	0	-19.7	0	-65.7	0
15	CR+SH+PT_D10K	762	741	-197.9	0	3.5	0	-14.1	0
16	CR+SH+PT_D10K	762	742	197.9	0	-3.5	0	-36.7	0
17	CR+SH+PT_D10K	765	743	168.3	0	13.1	0	-41.7	0
18	CR+SH+PT_D10K	765	744	-168.3	0	-13.1	0	-43.8	0
19	CR+SH+PT_D10K	768	745	49.6	0	2.1	0	-2.5	0
20	CR+SH+PT_D10K	768	746	-49.6	0	-2.1	0	-32.5	0
21	CR+SH+PT_D10K	771	747	4.1	0	28.7	0	-8.9	0
22	CR+SH+PT_D10K	771	748	-4.1	0	-28.7	0	-363.2	-0.1

Load (Row) Number	User's Load ID	Member ID	Joint ID	Fx (kips)	Fy (kips)	Fz (kips)	Mx (ft*kip)	My (ft*kip)	Mz (ft*kip)
1	CR+SH+PT_EOC	741	727	175.9	0	-1.6	0	24.4	0
2	CR+SH+PT_EOC	741	728	-175.9	0	1.6	0	11.9	0
3	CR+SH+PT_EOC	744	729	-183.7	0	1.5	0	-11	0
4	CR+SH+PT_EOC	744	730	183.7	0	-1.5	0	-10.8	0
5	CR+SH+PT_EOC	747	731	125.6	0	12.8	0	-52.3	0
6	CR+SH+PT_EOC	747	732	-125.6	0	-12.8	0	-56.9	0
7	CR+SH+PT_EOC	750	733	-247.9	0	3.7	0	-23.6	0
8	CR+SH+PT_EOC	750	734	247.9	0	-3.7	0	-28	0
9	CR+SH+PT_EOC	753	735	173.5	0	17.2	0	-66.3	0
10	CR+SH+PT_EOC	753	736	-173.5	0	-17.2	0	-64.9	0
11	CR+SH+PT_EOC	756	737	-281	0	4.4	0	-28.5	0
12	CR+SH+PT_EOC	756	738	281	0	-4.4	0	-35.1	0
13	CR+SH+PT_EOC	759	739	188.3	0	19.3	0	-69.5	0
14	CR+SH+PT_EOC	759	740	-188.3	0	-19.3	0	-65.7	0
15	CR+SH+PT_EOC	762	741	-259.6	0	4.6	0	-26.8	0
16	CR+SH+PT_EOC	762	742	259.6	0	-4.6	0	-38.4	0
17	CR+SH+PT_EOC	765	743	189.1	0	18.6	0	-62.1	0
18	CR+SH+PT_EOC	765	744	-189.1	0	-18.6	0	-59.2	0
19	CR+SH+PT_EOC	768	745	-214.1	0	4.7	0	-36.3	0
20	CR+SH+PT_EOC	768	746	214.1	0	-4.7	0	-41.1	0
21	CR+SH+PT_EOC	771	747	-4	0	6.9	0	221.9	0.1
22	CR+SH+PT_EOC	771	748	4	0	-6.9	0	-311.8	0
1	DC	741	727	685.6	0	5.4	0	-4.7	0
2	DC	741	728	-679.2	0	4.7	0	-2.8	0
3	DC	744	729	-356.6	0	1.6	0	12.7	0
4	DC	744	730	362.6	0	3.2	0	-1.1	0
5	DC	747	731	68.2	0	4.4	0	-8.5	0
6	DC	747	732	-63.7	0	-4.2	0	-28	0
7	DC	750	733	-66	0	4.2	0	-4	0
8	DC	750	734	71.3	0	1	0	-18.1	0
9	DC	753	735	-29.5	0	-0.4	0	-2.1	0
10	DC	753	736	33.5	0	1.2	0	8	0
11	DC	756	737	109.5	0	0.3	0	24.5	0
12	DC	756	738	-104.4	0	5.3	0	11.2	0
13	DC	759	739	-188	0	-11.2	0	39.1	0
14	DC	759	740	191.5	0	12.4	0	43.5	0
15	DC	762	741	319.8	0	-3.2	0	54	0
16	DC	762	742	-314.9	0	8.9	0	33	0
17	DC	765	743	-254.1	0	-18.9	0	79.3	0.1
18	DC	765	744	257.2	0	20.3	0	48.6	0
19	DC	768	745	517	0	-1	0	47.1	0.1
20	DC	768	746	-511.7	0	7.8	0	25	0
21	DC	771	747	59.1	0	37.6	-0.1	-318.5	-0.3
22	DC	771	748	-48.9	0	-37.6	0.1	-169.2	0
1	DW	741	727	9.9	0	-0.2	0	2.5	0
2	DW	741	728	-9.9	0	0.2	0	1.8	0
3	DW	744	729	-22.4	0	-0.3	0	3	0
4	DW	744	730	22.4	0	0.3	0	1.1	0
5	DW	747	731	-5.2	0	-0.1	0	1.9	0
6	DW	747	732	5.2	0	0.1	0	-1.4	0
7	DW	750	733	-12.3	0	0.2	0	-1.7	0
8	DW	750	734	12.3	0	-0.2	0	-1.4	0
9	DW	753	735	1.5	0	0.6	0	-2.6	0
10	DW	753	736	-1.5	0	-0.6	0	-1.9	0
11	DW	756	737	-17.1	0	0.1	0	-1.1	0
12	DW	756	738	17.1	0	-0.1	0	-0.7	0
13	DW	759	739	0.6	0	0.6	0	-2.2	0
14	DW	759	740	-0.6	0	-0.6	0	-2.1	0
15	DW	762	741	-14	0	0.1	0	-0.8	0
16	DW	762	742	14	0	-0.1	0	-1.1	0
17	DW	765	743	4	0	0.5	0	-1.5	0
18	DW	765	744	-4	0	-0.5	0	-1.6	0
19	DW	768	745	-14.9	0	0.3	0	-3.9	0
20	DW	768	746	14.9	0	-0.3	0	-1.5	0
21	DW	771	747	-0.6	0	-2.6	0	27.8	0
22	DW	771	748	0.6	0	2.6	0	5.9	0

Load (Row) Number	User's Load ID	Member ID	Joint ID	Fx (kips)	Fy (kips)	Fz (kips)	Mx (ft*kip)	My (ft*kip)	Mz (ft*kip)
1	LL1_Deck	741	727	36.1	0	-0.7	0	9.2	0
2	LL1_Deck	741	728	-36.1	0	0.7	0	6.5	0
3	LL1_Deck	744	729	-81.9	0	-1	0	10.9	0
4	LL1_Deck	744	730	81.9	0	1	0	3.9	0
5	LL1_Deck	747	731	-18.9	0	-0.2	0	7	0
6	LL1_Deck	747	732	18.9	0	0.2	0	-5	0
7	LL1_Deck	750	733	-44.9	0	0.8	0	-6.4	0
8	LL1_Deck	750	734	44.9	0	-0.8	0	-5.3	0
9	LL1_Deck	753	735	5.6	0	2.1	0	-9.4	0
10	LL1_Deck	753	736	-5.6	0	-2.1	0	-6.8	0
11	LL1_Deck	756	737	-62.7	0	0.5	0	-4.1	0
12	LL1_Deck	756	738	62.7	0	-0.5	0	-2.6	0
13	LL1_Deck	759	739	2.2	0	2.2	0	-8.1	0
14	LL1_Deck	759	740	-2.2	0	-2.2	0	-7.5	0
15	LL1_Deck	762	741	-51.3	0	0.5	0	-3	0
16	LL1_Deck	762	742	51.3	0	-0.5	0	-4	0
17	LL1_Deck	765	743	14.8	0	1.8	0	-5.5	0
18	LL1_Deck	765	744	-14.8	0	-1.8	0	-5.9	0
19	LL1_Deck	768	745	-54.4	0	1.2	0	-14.4	0
20	LL1_Deck	768	746	54.4	0	-1.2	0	-5.4	0
21	LL1_Deck	771	747	-2.3	0	-9.5	0	101.8	0
22	LL1_Deck	771	748	2.3	0	9.5	0	21.6	0
1	LL1_Deck Offset	741	727	18	-0.1	-0.3	-1.7	4.6	0.6
2	LL1_Deck Offset	741	728	-18	0.1	0.3	1.7	3.3	-2.7
3	LL1_Deck Offset	744	729	-40.9	-3.4	-0.5	9.7	5.4	-36.9
4	LL1_Deck Offset	744	730	40.9	3.4	0.5	-9.7	1.9	-11.9
5	LL1_Deck Offset	747	731	-9.4	-5.5	-0.1	0.1	3.5	-51.9
6	LL1_Deck Offset	747	732	9.4	5.5	0.1	-0.1	-2.5	4.7
7	LL1_Deck Offset	750	733	-22.5	-2	0.4	10.6	-3.2	-27.9
8	LL1_Deck Offset	750	734	22.5	2	-0.4	-10.6	-2.6	0
9	LL1_Deck Offset	753	735	2.8	-4.8	1.1	3.4	-4.7	-44.7
10	LL1_Deck Offset	753	736	-2.8	4.8	-1.1	-3.4	-3.4	8.2
11	LL1_Deck Offset	756	737	-31.3	-1.2	0.2	9.1	-2	-19.5
12	LL1_Deck Offset	756	738	31.3	1.2	-0.2	-9.1	-1.3	2.6
13	LL1_Deck Offset	759	739	1.1	-3.6	1.1	4.5	-4	-33
14	LL1_Deck Offset	759	740	-1.1	3.6	-1.1	-4.5	-3.8	7.6
15	LL1_Deck Offset	762	741	-25.6	-0.4	0.2	5.7	-1.5	-10
16	LL1_Deck Offset	762	742	25.6	0.4	-0.2	-5.7	-2	3.5
17	LL1_Deck Offset	765	743	7.4	-1.9	0.9	3.1	-2.7	-17.3
18	LL1_Deck Offset	765	744	-7.4	1.9	-0.9	-3.1	-3	5
19	LL1_Deck Offset	768	745	-27.2	0.5	0.6	0.4	-7.2	3.4
20	LL1_Deck Offset	768	746	27.2	-0.5	-0.6	-0.4	-2.7	4.3
21	LL1_Deck Offset	771	747	-1.1	-1.8	-4.8	-0.7	50.9	-18.4
22	LL1_Deck Offset	771	748	1.1	1.8	4.8	0.7	10.8	-5.3
1	LL1_Roof	741	727	7.2	0	0.1	0	-0.5	0
2	LL1_Roof	741	728	-7.2	0	-0.1	0	-1.3	0
3	LL1_Roof	744	729	-3.9	0	-0.1	0	-0.2	0
4	LL1_Roof	744	730	3.9	0	0.1	0	1.3	0
5	LL1_Roof	747	731	3	0	0.3	0	-1.2	0
6	LL1_Roof	747	732	-3	0	-0.3	0	-1.4	0
7	LL1_Roof	750	733	-7.6	0	0.1	0	-0.8	0
8	LL1_Roof	750	734	7.6	0	-0.1	0	-0.9	0
9	LL1_Roof	753	735	5.2	0	0.4	0	-1.4	0
10	LL1_Roof	753	736	-5.2	0	-0.4	0	-1.3	0
11	LL1_Roof	756	737	-8.4	0	0.1	0	-1	0
12	LL1_Roof	756	738	8.4	0	-0.1	0	-0.8	0
13	LL1_Roof	759	739	5.4	0	0.4	0	-1.6	0
14	LL1_Roof	759	740	-5.4	0	-0.4	0	-1.3	0
15	LL1_Roof	762	741	-8.4	0	0.1	0	-0.8	0
16	LL1_Roof	762	742	8.4	0	-0.1	0	-0.7	0
17	LL1_Roof	765	743	6.5	0	0.5	0	-1.4	0
18	LL1_Roof	765	744	-6.5	0	-0.5	0	-1.9	0
19	LL1_Roof	768	745	-5.5	0	0.2	0	-1.4	0
20	LL1_Roof	768	746	5.5	0	-0.2	0	-1.5	0
21	LL1_Roof	771	747	3.2	0	0.3	0	2.7	0
22	LL1_Roof	771	748	-3.2	0	-0.3	0	-6.4	0

Load (Row) Number	User's Load ID	Member ID	Joint ID	Fx (kips)	Fy (kips)	Fz (kips)	Mx (ft*kip)	My (ft*kip)	Mz (ft*kip)
1	LL2_Deck	741	727	-45.8	0	-0.2	0	1.8	0
2	LL2_Deck	741	728	45.8	0	0.2	0	3.4	0
3	LL2_Deck	744	729	-4.3	0	-0.1	0	-0.5	0
4	LL2_Deck	744	730	4.3	0	0.1	0	1.9	0
5	LL2_Deck	747	731	0.9	0	0.4	0	-1.1	0
6	LL2_Deck	747	732	-0.9	0	-0.4	0	-2.7	0
7	LL2_Deck	750	733	-39.6	0	0.5	0	-5.4	0
8	LL2_Deck	750	734	39.6	0	-0.5	0	-1.6	0
9	LL2_Deck	753	735	27.3	0	2.3	0	-9	0
10	LL2_Deck	753	736	-27.3	0	-2.3	0	-8.7	0
11	LL2_Deck	756	737	-75.8	0	1	0	-9.2	0
12	LL2_Deck	756	738	75.8	0	-1	0	-5	0
13	LL2_Deck	759	739	51.5	0	4.3	0	-15.3	0
14	LL2_Deck	759	740	-51.5	0	-4.3	0	-14.7	0
15	LL2_Deck	762	741	-104.1	0	1.6	0	-13.3	0
16	LL2_Deck	762	742	104.1	0	-1.6	0	-9.2	0
17	LL2_Deck	765	743	68	0	5.3	0	-20.3	0
18	LL2_Deck	765	744	-68	0	-5.3	0	-14.2	0
19	LL2_Deck	768	745	-139.2	0	1.7	0	-20.1	0
20	LL2_Deck	768	746	139.2	0	-1.7	0	-8.6	0
21	LL2_Deck	771	747	-3.7	0	-12.6	0	125.5	0.1
22	LL2_Deck	771	748	3.7	0	12.6	0	37.9	0
1	LL2_Deck Offset	741	727	-22.9	0	-0.1	-0.5	0.9	2.6
2	LL2_Deck Offset	741	728	22.9	0	0.1	0.5	1.7	-2
3	LL2_Deck Offset	744	729	-2.2	-0.6	0	1.1	-0.3	-1.9
4	LL2_Deck Offset	744	730	2.2	0.6	0	-1.1	1	-7
5	LL2_Deck Offset	747	731	0.4	-0.7	0.2	1.8	-0.5	-5.1
6	LL2_Deck Offset	747	732	-0.4	0.7	-0.2	-1.8	-1.3	-1.1
7	LL2_Deck Offset	750	733	-19.8	-0.4	0.2	1.3	-2.7	-2.4
8	LL2_Deck Offset	750	734	19.8	0.4	-0.2	-1.3	-0.8	-3.8
9	LL2_Deck Offset	753	735	13.7	-0.7	1.2	1.8	-4.5	-5.5
10	LL2_Deck Offset	753	736	-13.7	0.7	-1.2	-1.8	-4.4	-0.1
11	LL2_Deck Offset	756	737	-37.9	-0.4	0.5	1.7	-4.6	-3.2
12	LL2_Deck Offset	756	738	37.9	0.4	-0.5	-1.7	-2.5	-2.5
13	LL2_Deck Offset	759	739	25.8	-0.8	2.1	2	-7.6	-6.6
14	LL2_Deck Offset	759	740	-25.8	0.8	-2.1	-2	-7.4	0.9
15	LL2_Deck Offset	762	741	-52.1	-0.4	0.8	2.4	-6.7	-4.5
16	LL2_Deck Offset	762	742	52.1	0.4	-0.8	-2.4	-4.6	-1.8
17	LL2_Deck Offset	765	743	34	-1	2.6	2.6	-10.2	-8.7
18	LL2_Deck Offset	765	744	-34	1	-2.6	-2.6	-7.1	2
19	LL2_Deck Offset	768	745	-69.6	-0.6	0.9	3.4	-10	-7.6
20	LL2_Deck Offset	768	746	69.6	0.6	-0.9	-3.4	-4.3	-1.5
21	LL2_Deck Offset	771	747	-1.9	2.7	-6.3	1.5	62.7	33.2
22	LL2_Deck Offset	771	748	1.9	-2.7	6.3	-1.5	18.9	1.6
1	LL2_Roof	741	727	-6.1	0	0	0	0.4	0
2	LL2_Roof	741	728	6.1	0	0	0	0.5	0
3	LL2_Roof	744	729	-0.4	0	0	0	0	0
4	LL2_Roof	744	730	0.4	0	0	0	0.3	0
5	LL2_Roof	747	731	-0.1	0	0	0	0	0
6	LL2_Roof	747	732	0.1	0	0	0	-0.3	0
7	LL2_Roof	750	733	-4.5	0	0.1	0	-0.6	0
8	LL2_Roof	750	734	4.5	0	-0.1	0	-0.2	0
9	LL2_Roof	753	735	3.2	0	0.3	0	-1.1	0
10	LL2_Roof	753	736	-3.2	0	-0.3	0	-1	0
11	LL2_Roof	756	737	-9	0	0.1	0	-1.1	0
12	LL2_Roof	756	738	9	0	-0.1	0	-0.6	0
13	LL2_Roof	759	739	6.1	0	0.5	0	-1.8	0
14	LL2_Roof	759	740	-6.1	0	-0.5	0	-1.8	0
15	LL2_Roof	762	741	-12.5	0	0.2	0	-1.6	0
16	LL2_Roof	762	742	12.5	0	-0.2	0	-1.1	0
17	LL2_Roof	765	743	8.1	0	0.6	0	-2.5	0
18	LL2_Roof	765	744	-8.1	0	-0.6	0	-1.7	0
19	LL2_Roof	768	745	-16.9	0	0.2	0	-2.4	0
20	LL2_Roof	768	746	16.9	0	-0.2	0	-1	0
21	LL2_Roof	771	747	-0.5	0	-1.5	0	15.3	0
22	LL2_Roof	771	748	0.5	0	1.5	0	4.6	0

Load (Row) Number	User's Load ID	Member ID	Joint ID	Fx (kips)	Fy (kips)	Fz (kips)	Mx (ft*kip)	My (ft*kip)	Mz (ft*kip)
1	LL3_Deck	741	727	81.9	0	-0.5	0	7.5	0
2	LL3_Deck	741	728	-81.9	0	0.5	0	3.1	0
3	LL3_Deck	744	729	-77.5	0	-0.9	0	11.4	0
4	LL3_Deck	744	730	77.5	0	0.9	0	1.9	0
5	LL3_Deck	747	731	-19.8	0	-0.7	0	8.1	0
6	LL3_Deck	747	732	19.8	0	0.7	0	-2.3	0
7	LL3_Deck	750	733	-5.3	0	0.3	0	-0.9	0
8	LL3_Deck	750	734	5.3	0	-0.3	0	-3.7	0
9	LL3_Deck	753	735	-21.7	0	-0.2	0	-0.4	0
10	LL3_Deck	753	736	21.7	0	0.2	0	1.9	0
11	LL3_Deck	756	737	13.1	0	-0.5	0	5.1	0
12	LL3_Deck	756	738	-13.1	0	0.5	0	2.3	0
13	LL3_Deck	759	739	-49.3	0	-2	0	7.2	0
14	LL3_Deck	759	740	49.3	0	2	0	7.2	0
15	LL3_Deck	762	741	52.8	0	-1.1	0	10.3	0
16	LL3_Deck	762	742	-52.8	0	1.1	0	5.2	0
17	LL3_Deck	765	743	-53.2	0	-3.5	0	14.8	0
18	LL3_Deck	765	744	53.2	0	3.5	0	8.3	0
19	LL3_Deck	768	745	84.8	0	-0.5	0	5.7	0
20	LL3_Deck	768	746	-84.8	0	0.5	0	3.2	0
21	LL3_Deck	771	747	1.4	0	3.1	0	-23.7	-0.1
22	LL3_Deck	771	748	-1.4	0	-3.1	0	-16.3	0
1	LL3_Deck Offset	741	727	40.9	-0.1	-0.2	-1.3	3.7	-2
2	LL3_Deck Offset	741	728	-40.9	0.1	0.2	1.3	1.6	-0.7
3	LL3_Deck Offset	744	729	-38.8	-2.7	-0.5	8.6	5.7	-35
4	LL3_Deck Offset	744	730	38.8	2.7	0.5	-8.6	1	-4.9
5	LL3_Deck Offset	747	731	-9.9	-4.8	-0.3	-1.7	4	-46.8
6	LL3_Deck Offset	747	732	9.9	4.8	0.3	1.7	-1.2	5.8
7	LL3_Deck Offset	750	733	-2.6	-1.5	0.2	9.3	-0.5	-25.5
8	LL3_Deck Offset	750	734	2.6	1.5	-0.2	-9.3	-1.9	3.8
9	LL3_Deck Offset	753	735	-10.9	-4	-0.1	1.7	-0.2	-39.2
10	LL3_Deck Offset	753	736	10.9	4	0.1	-1.7	1	8.3
11	LL3_Deck Offset	756	737	6.6	-0.8	-0.3	7.4	2.5	-16.3
12	LL3_Deck Offset	756	738	-6.6	0.8	0.3	-7.4	1.2	5.1
13	LL3_Deck Offset	759	739	-24.6	-2.8	-1	2.5	3.6	-26.4
14	LL3_Deck Offset	759	740	24.6	2.8	1	-2.5	3.6	6.8
15	LL3_Deck Offset	762	741	26.4	0	-0.5	3.4	5.2	-5.5
16	LL3_Deck Offset	762	742	-26.4	0	0.5	-3.4	2.6	5.3
17	LL3_Deck Offset	765	743	-26.6	-0.9	-1.8	0.5	7.4	-8.7
18	LL3_Deck Offset	765	744	26.6	0.9	1.8	-0.5	4.2	3
19	LL3_Deck Offset	768	745	42.5	1	-0.3	-3	2.8	11
20	LL3_Deck Offset	768	746	-42.5	-1	0.3	3	1.6	5.8
21	LL3_Deck Offset	771	747	0.7	-4.5	1.5	-2.2	-11.9	-51.6
22	LL3_Deck Offset	771	748	-0.7	4.5	-1.5	2.2	-8.2	-6.9
1	LL3_Roof	741	727	13.3	0	0.1	0	-0.9	0
2	LL3_Roof	741	728	-13.3	0	-0.1	0	-1.8	0
3	LL3_Roof	744	729	-3.5	0	-0.1	0	-0.2	0
4	LL3_Roof	744	730	3.5	0	0.1	0	1.1	0
5	LL3_Roof	747	731	3.2	0	0.3	0	-1.1	0
6	LL3_Roof	747	732	-3.2	0	-0.3	0	-1.2	0
7	LL3_Roof	750	733	-3	0	0.1	0	-0.2	0
8	LL3_Roof	750	734	3	0	-0.1	0	-0.7	0
9	LL3_Roof	753	735	2	0	0.1	0	-0.3	0
10	LL3_Roof	753	736	-2	0	-0.1	0	-0.3	0
11	LL3_Roof	756	737	0.6	0	0	0	0.1	0
12	LL3_Roof	756	738	-0.6	0	0	0	-0.2	0
13	LL3_Roof	759	739	-0.7	0	-0.1	0	0.2	0
14	LL3_Roof	759	740	0.7	0	0.1	0	0.4	0
15	LL3_Roof	762	741	4.1	0	-0.1	0	0.8	0
16	LL3_Roof	762	742	-4.1	0	0.1	0	0.4	0
17	LL3_Roof	765	743	-1.7	0	-0.1	0	1	0
18	LL3_Roof	765	744	1.7	0	0.1	0	-0.2	0
19	LL3_Roof	768	745	11.5	0	0	0	1.1	0
20	LL3_Roof	768	746	-11.5	0	0	0	-0.5	0
21	LL3_Roof	771	747	3.6	0	1.8	0	-12.6	0
22	LL3_Roof	771	748	-3.6	0	-1.8	0	-11.1	0

Load (Row) Number	User's Load ID	Member ID	Joint ID	Fx (kips)	Fy (kips)	Fz (kips)	Mx (ft*kip)	My (ft*kip)	Mz (ft*kip)
1	TU-	741	727	-241.7	0	-1.2	0	12.5	0
2	TU-	741	728	241.7	0	1.2	0	13.9	0
3	TU-	744	729	69.5	0	-1.6	0	11.5	0
4	TU-	744	730	-69.5	0	1.6	0	11.3	0
5	TU-	747	731	-63.3	0	-3.2	0	16.5	0
6	TU-	747	732	63.3	0	3.2	0	10.7	0
7	TU-	750	733	33.8	0	-0.5	0	1.1	0
8	TU-	750	734	-33.8	0	0.5	0	5.3	0
9	TU-	753	735	-19.8	0	-0.5	0	2.2	0
10	TU-	753	736	19.8	0	0.5	0	1.3	0
11	TU-	756	737	-23.9	0	0.2	0	-4	0
12	TU-	756	738	23.9	0	-0.2	0	0.9	0
13	TU-	759	739	16	0	2.3	0	-7.2	0
14	TU-	759	740	-16	0	-2.3	0	-8.6	0
15	TU-	762	741	-88.5	0	1.3	0	-13.2	0
16	TU-	762	742	88.5	0	-1.3	0	-5.9	0
17	TU-	765	743	47.2	0	5.3	0	-20.3	0
18	TU-	765	744	-47.2	0	-5.3	0	-14.5	0
19	TU-	768	745	-176.6	0	1.9	0	-22.8	0
20	TU-	768	746	176.6	0	-1.9	0	-8.1	0
21	TU-	771	747	-5.2	0	-15.5	0	151.1	0.1
22	TU-	771	748	5.2	0	15.5	0	50.2	0
1	TU+	741	727	241.7	0	1.2	0	-12.5	0
2	TU+	741	728	-241.7	0	-1.2	0	-13.9	0
3	TU+	744	729	-69.5	0	1.6	0	-11.5	0
4	TU+	744	730	69.5	0	-1.6	0	-11.3	0
5	TU+	747	731	63.3	0	3.2	0	-16.5	0
6	TU+	747	732	-63.3	0	-3.2	0	-10.7	0
7	TU+	750	733	-33.8	0	0.5	0	-1.1	0
8	TU+	750	734	33.8	0	-0.5	0	-5.3	0
9	TU+	753	735	19.8	0	0.5	0	-2.2	0
10	TU+	753	736	-19.8	0	-0.5	0	-1.3	0
11	TU+	756	737	23.9	0	-0.2	0	4	0
12	TU+	756	738	-23.9	0	0.2	0	-0.9	0
13	TU+	759	739	-16	0	-2.3	0	7.2	0
14	TU+	759	740	16	0	2.3	0	8.6	0
15	TU+	762	741	88.5	0	-1.3	0	13.2	0
16	TU+	762	742	-88.5	0	1.3	0	5.9	0
17	TU+	765	743	-47.2	0	-5.3	0	20.3	0
18	TU+	765	744	47.2	0	5.3	0	14.5	0
19	TU+	768	745	176.6	0	-1.9	0	22.8	0
20	TU+	768	746	-176.6	0	1.9	0	8.1	0
21	TU+	771	747	5.2	0	15.5	0	-151.1	-0.1
22	TU+	771	748	-5.2	0	-15.5	0	-50.2	0
1	TU+Temp. Diff.	741	727	377.8	0	1.6	0	-18.9	0
2	TU+Temp. Diff.	741	728	-377.8	0	-1.6	0	-17.5	0
3	TU+Temp. Diff.	744	729	-144.6	0	3.2	0	-22.2	0
4	TU+Temp. Diff.	744	730	144.6	0	-3.2	0	-24.8	0
5	TU+Temp. Diff.	747	731	124.4	0	6.1	0	-30.7	0
6	TU+Temp. Diff.	747	732	-124.4	0	-6.1	0	-21.6	0
7	TU+Temp. Diff.	750	733	-86.8	0	1.2	0	-5	0
8	TU+Temp. Diff.	750	734	86.8	0	-1.2	0	-11.3	0
9	TU+Temp. Diff.	753	735	55.7	0	2	0	-8.8	0
10	TU+Temp. Diff.	753	736	-55.7	0	-2	0	-6.7	0
11	TU+Temp. Diff.	756	737	20.3	0	-0.1	0	5.1	0
12	TU+Temp. Diff.	756	738	-20.3	0	0.1	0	-4.3	0
13	TU+Temp. Diff.	759	739	-13.3	0	-3.3	0	10.1	0
14	TU+Temp. Diff.	759	740	13.3	0	3.3	0	13.4	0
15	TU+Temp. Diff.	762	741	157.9	0	-2.4	0	24.5	0
16	TU+Temp. Diff.	762	742	-157.9	0	2.4	0	9.4	0
17	TU+Temp. Diff.	765	743	-81.2	0	-10	0	38	0
18	TU+Temp. Diff.	765	744	81.2	0	10	0	27.3	0
19	TU+Temp. Diff.	768	745	351.6	0	-3.7	0	45.9	0
20	TU+Temp. Diff.	768	746	-351.6	0	3.7	0	15.4	0
21	TU+Temp. Diff.	771	747	10.6	0	31.5	0	-307.9	-0.1
22	TU+Temp. Diff.	771	748	-10.6	0	-31.5	0	-101.2	0

AASHTO Limit State: STR 3 - STRENGTH III													
Max/ Min ID	Load Num	Member Num	Joint Num	Limit State/ Combo ID	Fx (kips)	Fy (kips)	Fz (kips)	Mx (ft*kip)	My (ft*kip)	Mz (ft*kip)	Mxy (ft*kip)	Mxz (ft*kip)	Myz (ft*kip)
Max Fx	1	741	727	STR 3/ 49	1274.0	-1.0	6.4	9.1	-7.8	-12.3	12.0	15.3	14.6
Max Fy	22	771	748	STR 3/ 10	-50.0	10.4	-44.9	-10.0	-487.4	41.9	487.5	43.0	489.2
Max Fz	21	771	747	STR 3/ 115	85.4	-4.6	97.5	5.3	-610.0	-69.4	610.0	69.6	613.9
Max Mx	20	768	746	STR 3/ 10	-340.4	-0.6	4.4	29.0	-12.2	-21.3	31.5	36.0	24.5
Max My	21	771	747	STR 3/ 129	43.2	-4.6	21.4	5.4	119.4	-69.1	119.5	69.3	138.0
Max Mz	19	768	745	STR 3/ 10	347.0	3.4	4.2	-29.0	12.0	52.9	31.4	60.3	54.3
Max Mxy	22	771	748	STR 3/ 115	-72.7	3.9	-96.1	-5.3	-644.8	13.5	644.9	14.5	645.0
Max Mxz	21	771	747	STR 3/ 40	76.0	-12.5	82.2	10.0	-478.1	-190.3	478.2	190.5	514.6
Max Myz	22	771	748	STR 3/ 115	-72.7	3.9	-96.1	-5.3	-644.8	13.5	644.9	14.5	645.0
Min Fx	2	741	728	STR 3/ 49	-1263.9	-0.1	4.9	-9.1	-9.3	2.4	13.0	9.4	9.6
Min Fy	21	771	747	STR 3/ 10	62.7	-12.5	44.9	10.0	-96.2	-190.1	96.7	190.3	213.0
Min Fz	22	771	748	STR 3/ 115	-72.7	3.9	-96.1	-5.3	-644.8	13.5	644.9	14.5	645.0
Min Mx	19	768	745	STR 3/ 10	347.0	3.4	4.2	-29.0	12.0	52.9	31.4	60.3	54.3
Min My	22	771	748	STR 3/ 115	-72.7	3.9	-96.1	-5.3	-644.8	13.5	644.9	14.5	645.0
Min Mz	21	771	747	STR 3/ 40	76.0	-12.5	82.2	10.0	-478.1	-190.3	478.2	190.5	514.6
Min Mxy	14	759	740	STR 3/ 85	99.0	0.1	-0.7	2.5	0.7	-18.6	2.6	18.8	18.6
Min Mxz	5	747	731	STR 3/ 10	173.4	-3.6	16.1	2.8	-52.5	4.9	52.6	5.6	52.8
Min Myz	3	744	729	STR 3/ 40	-688.9	-2.7	4.3	-10.6	-0.4	1.0	10.6	10.7	1.1

AASHTO Limit State: STR 3 - STRENGTH III

	Max/ Min ID	Combo ID	Fx (kips)	Fy (kips)	Fz (kips)	Mx (ft*kip)	My (ft*kip)	Mz (ft*kip)	Mxy (ft*kip)	Mxz (ft*kip)	Myz (ft*kip)
	Max Fx	STR 3/ 49	1274.0	-1.0	6.4	9.1	-7.8	-12.3	12.0	15.3	14.6
	Max Fy	STR 3/ 5	889.5	-1.0	3.6	9.1	49.1	-12.3	49.9	15.3	50.6
	Max Fz	STR 3/ 109	1265.6	-1.0	6.5	9.1	-9.9	-12.3	13.4	15.3	15.8
	Max Mx	STR 3/ 10	904.9	-2.5	4.4	20.4	26.3	-25.8	33.3	32.9	36.8
	Max My	STR 3/ 135	608.6	-1.0	1.5	9.1	53.5	-12.3	54.2	15.3	54.9
Load No.	Max Mz	STR 3/ 5	889.5	-1.0	3.6	9.1	49.1	-12.3	49.9	15.3	50.6
1	Max Mxy	STR 3/ 135	608.6	-1.0	1.5	9.1	53.5	-12.3	54.2	15.3	54.9
	Max Mxz	STR 3/ 1	926.9	-2.8	4.3	18.5	28.5	-27.4	34.0	33.1	39.6
Member	Max Myz	STR 3/ 135	608.6	-1.0	1.5	9.1	53.5	-12.3	54.2	15.3	54.9
741	Min Fx	STR 3/ 195	600.1	-1.0	1.6	9.1	51.3	-12.3	52.1	15.3	52.8
	Min Fy	STR 3/ 1	926.9	-2.8	4.3	18.5	28.5	-27.4	34.0	33.1	39.6
Joint	Min Fz	STR 3/ 135	608.6	-1.0	1.5	9.1	53.5	-12.3	54.2	15.3	54.9
727	Min Mx	STR 3/ 5	889.5	-1.0	3.6	9.1	49.1	-12.3	49.9	15.3	50.6
	Min My	STR 3/ 109	1265.6	-1.0	6.5	9.1	-9.9	-12.3	13.4	15.3	15.8
	Min Mz	STR 3/ 1	926.9	-2.8	4.3	18.5	28.5	-27.4	34.0	33.1	39.6
	Min Mxy	STR 3/ 159	925.0	-1.0	4.1	9.1	-0.2	-12.3	9.1	15.3	12.3
	Min Mxz	STR 3/ 5	889.5	-1.0	3.6	9.1	49.1	-12.3	49.9	15.3	50.6
	Min Myz	STR 3/ 159	925.0	-1.0	4.1	9.1	-0.2	-12.3	9.1	15.3	12.3
	Max Fx	STR 3/ 195	-596.5	-0.1	8.9	-9.1	31.4	2.4	32.7	9.4	31.5
	Max Fy	STR 3/ 5	-883.6	-0.1	10.5	-9.1	29.7	2.4	31.0	9.4	29.8
	Max Fz	STR 3/ 15	-842.6	-0.1	10.7	-9.1	32.0	2.4	33.2	9.4	32.1
	Max Mx	STR 3/ 5	-883.6	-0.1	10.5	-9.1	29.7	2.4	31.0	9.4	29.8
	Max My	STR 3/ 135	-604.9	-0.1	9.0	-9.1	33.0	2.4	34.2	9.4	33.0
Load No.	Max Mz	STR 3/ 10	-896.9	-1.3	8.2	-20.4	17.8	10.8	27.1	23.1	20.8
2	Max Mxy	STR 3/ 135	-604.9	-0.1	9.0	-9.1	33.0	2.4	34.2	9.4	33.0
	Max Mxz	STR 3/ 10	-896.9	-1.3	8.2	-20.4	17.8	10.8	27.1	23.1	20.8
Member	Max Myz	STR 3/ 135	-604.9	-0.1	9.0	-9.1	33.0	2.4	34.2	9.4	33.0
741	Min Fx	STR 3/ 49	-1263.9	-0.1	4.9	-9.1	-9.3	2.4	13.0	9.4	9.6
	Min Fy	STR 3/ 10	-896.9	-1.3	8.2	-20.4	17.8	10.8	27.1	23.1	20.8
Joint	Min Fz	STR 3/ 229	-1017.8	-0.1	3.1	-9.1	-9.8	2.4	13.4	9.4	10.1
728	Min Mx	STR 3/ 10	-896.9	-1.3	8.2	-20.4	17.8	10.8	27.1	23.1	20.8
	Min My	STR 3/ 109	-1255.5	-0.1	4.7	-9.1	-10.8	2.4	14.1	9.4	11.1
	Min Mz	STR 3/ 5	-883.6	-0.1	10.5	-9.1	29.7	2.4	31.0	9.4	29.8
	Min Mxy	STR 3/ 159	-917.2	-0.1	3.6	-9.1	-4.2	2.4	10.0	9.4	4.8
	Min Mxz	STR 3/ 5	-883.6	-0.1	10.5	-9.1	29.7	2.4	31.0	9.4	29.8
	Min Myz	STR 3/ 158	-911.0	-0.6	4.1	-13.0	-2.2	3.9	13.2	13.6	4.5

AASHTO Limit State: STR 3 - STRENGTH III

	Max/ Min ID	Combo ID	Fx (kips)	Fy (kips)	Fz (kips)	Mx (ft*kip)	My (ft*kip)	Mz (ft*kip)	Mxy (ft*kip)	Mxz (ft*kip)	Myz (ft*kip)
	Max Fx	STR 3/ 190	-452.1	-2.7	2.4	-10.6	4.9	1.0	11.7	10.7	5.0
	Max Fy	STR 3/ 1	-628.3	0.6	2.3	-13.7	15.1	27.4	20.4	30.7	31.3
	Max Fz	STR 3/ 109	-743.1	0.1	6.3	-7.0	-13.4	13.4	15.1	15.2	19.0
	Max Mx	STR 3/ 5	-601.6	0.1	0.9	-7.0	24.2	13.6	25.2	15.3	27.8
	Max My	STR 3/ 5	-601.6	0.1	0.9	-7.0	24.2	13.6	25.2	15.3	27.8
Load No.	Max Mz	STR 3/ 1	-628.3	0.6	2.3	-13.7	15.1	27.4	20.4	30.7	31.3
3	Max Mxy	STR 3/ 5	-601.6	0.1	0.9	-7.0	24.2	13.6	25.2	15.3	27.8
	Max Mxz	STR 3/ 1	-628.3	0.6	2.3	-13.7	15.1	27.4	20.4	30.7	31.3
Member	Max Myz	STR 3/ 2	-621.2	0.6	1.8	-13.2	17.5	26.2	21.9	29.3	31.5
744	Min Fx	STR 3/ 59	-785.5	0.1	6.1	-7.0	-11.6	13.4	13.6	15.2	17.8
	Min Fy	STR 3/ 10	-596.0	-2.7	2.7	-10.6	11.9	1.0	16.0	10.7	11.9
Joint	Min Fz	STR 3/ 125	-476.8	0.1	0.3	-7.0	19.8	13.6	21.0	15.3	24.0
729	Min Mx	STR 3/ 1	-628.3	0.6	2.3	-13.7	15.1	27.4	20.4	30.7	31.3
	Min My	STR 3/ 239	-641.6	0.1	5.7	-7.0	-18.6	13.4	19.9	15.2	23.0
	Min Mz	STR 3/ 10	-596.0	-2.7	2.7	-10.6	11.9	1.0	16.0	10.7	11.9
	Min Mxy	STR 3/ 225	-564.8	0.1	2.9	-7.0	0.4	13.6	7.0	15.3	13.6
	Min Mxz	STR 3/ 10	-596.0	-2.7	2.7	-10.6	11.9	1.0	16.0	10.7	11.9
	Min Myz	STR 3/ 40	-688.9	-2.7	4.3	-10.6	-0.4	1.0	10.6	10.7	1.1
	Max Fx	STR 3/ 59	792.0	0.7	1.2	7.0	-24.8	-17.4	25.8	18.7	30.3
	Max Fy	STR 3/ 10	603.5	5.2	3.3	10.6	-8.1	-58.1	13.4	59.1	58.7
	Max Fz	STR 3/ 3	621.4	1.7	3.9	11.6	-3.3	-31.5	12.1	33.6	31.7
	Max Mx	STR 3/ 1	635.8	1.8	3.8	13.7	-4.9	-36.4	14.6	38.9	36.7
	Max My	STR 3/ 135	506.5	0.7	2.8	7.0	-0.8	-17.4	7.0	18.7	17.4
Load No.	Max Mz	STR 3/ 5	610.0	0.7	3.9	7.0	-2.1	-17.4	7.3	18.7	17.5
4	Max Mxy	STR 3/ 110	691.5	5.2	0.7	10.6	-27.1	-58.1	29.1	59.1	64.1
	Max Mxz	STR 3/ 10	603.5	5.2	3.3	10.6	-8.1	-58.1	13.4	59.1	58.7
Member	Max Myz	STR 3/ 110	691.5	5.2	0.7	10.6	-27.1	-58.1	29.1	59.1	64.1
744	Min Fx	STR 3/ 190	457.5	5.2	2.0	10.6	-8.6	-58.1	13.7	59.1	58.7
	Min Fy	STR 3/ 5	610.0	0.7	3.9	7.0	-2.1	-17.4	7.3	18.7	17.5
Joint	Min Fz	STR 3/ 230	564.6	5.2	-0.4	10.6	-26.7	-58.1	28.7	59.1	63.9
730	Min Mx	STR 3/ 5	610.0	0.7	3.9	7.0	-2.1	-17.4	7.3	18.7	17.5
	Min My	STR 3/ 110	691.5	5.2	0.7	10.6	-27.1	-58.1	29.1	59.1	64.1
	Min Mz	STR 3/ 10	603.5	5.2	3.3	10.6	-8.1	-58.1	13.4	59.1	58.7
	Min Mxy	STR 3/ 135	506.5	0.7	2.8	7.0	-0.8	-17.4	7.0	18.7	17.4
	Min Mxz	STR 3/ 5	610.0	0.7	3.9	7.0	-2.1	-17.4	7.3	18.7	17.5
	Min Myz	STR 3/ 135	506.5	0.7	2.8	7.0	-0.8	-17.4	7.0	18.7	17.4

AASHTO Limit State: STR 3 - STRENGTH III

	Max/ Min ID	Combo ID	Fx (kips)	Fy (kips)	Fz (kips)	Mx (ft*kip)	My (ft*kip)	Mz (ft*kip)	Mxy (ft*kip)	Mxz (ft*kip)	Myz (ft*kip)
	Max Fx	STR 3/ 119	314.8	0.6	24.9	1.5	-91.5	19.5	91.5	19.5	93.5
	Max Fy	STR 3/ 1	171.4	1.4	16.6	3.2	-51.8	38.8	51.9	38.9	64.7
	Max Fz	STR 3/ 119	314.8	0.6	24.9	1.5	-91.5	19.5	91.5	19.5	93.5
	Max Mx	STR 3/ 1	171.4	1.4	16.6	3.2	-51.8	38.8	51.9	38.9	64.7
	Max My	STR 3/ 125	116.5	0.6	12.5	1.5	-37.7	19.5	37.7	19.5	42.4
Load No.	Max Mz	STR 3/ 1	171.4	1.4	16.6	3.2	-51.8	38.8	51.9	38.9	64.7
5	Max Mxy	STR 3/ 119	314.8	0.6	24.9	1.5	-91.5	19.5	91.5	19.5	93.5
	Max Mxz	STR 3/ 1	171.4	1.4	16.6	3.2	-51.8	38.8	51.9	38.9	64.7
Member	Max Myz	STR 3/ 118	309.4	1.0	24.5	2.4	-89.7	27.3	89.7	27.4	93.7
747	Min Fx	STR 3/ 125	116.5	0.6	12.5	1.5	-37.7	19.5	37.7	19.5	42.4
	Min Fy	STR 3/ 10	173.4	-3.6	16.1	2.8	-52.5	4.9	52.6	5.6	52.8
Joint	Min Fz	STR 3/ 125	116.5	0.6	12.5	1.5	-37.7	19.5	37.7	19.5	42.4
731	Min Mx	STR 3/ 5	140.3	0.6	14.0	1.5	-40.6	19.5	40.7	19.5	45.0
	Min My	STR 3/ 119	314.8	0.6	24.9	1.5	-91.5	19.5	91.5	19.5	93.5
	Min Mz	STR 3/ 10	173.4	-3.6	16.1	2.8	-52.5	4.9	52.6	5.6	52.8
	Min Mxy	STR 3/ 125	116.5	0.6	12.5	1.5	-37.7	19.5	37.7	19.5	42.4
	Min Mxz	STR 3/ 10	173.4	-3.6	16.1	2.8	-52.5	4.9	52.6	5.6	52.8
	Min Myz	STR 3/ 125	116.5	0.6	12.5	1.5	-37.7	19.5	37.7	19.5	42.4
	Max Fx	STR 3/ 125	-112.3	-0.1	-13.2	-1.5	-72.1	-16.8	72.1	16.9	74.1
	Max Fy	STR 3/ 10	-167.7	5.2	-15.9	-2.8	-85.0	-42.4	85.1	42.5	95.0
	Max Fz	STR 3/ 125	-112.3	-0.1	-13.2	-1.5	-72.1	-16.8	72.1	16.9	74.1
	Max Mx	STR 3/ 5	-134.6	-0.1	-14.6	-1.5	-81.9	-16.8	81.9	16.9	83.6
	Max My	STR 3/ 185	-116.7	-0.1	-13.2	-1.5	-70.9	-16.8	71.0	16.9	72.9
Load No.	Max Mz	STR 3/ 9	-196.9	-0.1	-18.0	-1.5	-95.4	-16.7	95.4	16.7	96.8
6	Max Mxy	STR 3/ 59	-304.7	-0.1	-23.7	-1.5	-117.8	-16.7	117.8	16.7	119.0
	Max Mxz	STR 3/ 10	-167.7	5.2	-15.9	-2.8	-85.0	-42.4	85.1	42.5	95.0
Member	Max Myz	STR 3/ 58	-299.4	0.0	-23.5	-2.4	-116.7	-23.4	116.7	23.5	119.0
747	Min Fx	STR 3/ 119	-309.1	-0.1	-23.8	-1.5	-116.6	-16.7	116.6	16.7	117.8
	Min Fy	STR 3/ 5	-134.6	-0.1	-14.6	-1.5	-81.9	-16.8	81.9	16.9	83.6
Joint	Min Fz	STR 3/ 119	-309.1	-0.1	-23.8	-1.5	-116.6	-16.7	116.6	16.7	117.8
732	Min Mx	STR 3/ 1	-165.8	0.0	-16.3	-3.2	-88.7	-32.8	88.7	32.9	94.5
	Min My	STR 3/ 59	-304.7	-0.1	-23.7	-1.5	-117.8	-16.7	117.8	16.7	119.0
	Min Mz	STR 3/ 10	-167.7	5.2	-15.9	-2.8	-85.0	-42.4	85.1	42.5	95.0
	Min Mxy	STR 3/ 185	-116.7	-0.1	-13.2	-1.5	-70.9	-16.8	71.0	16.9	72.9
	Min Mxz	STR 3/ 9	-196.9	-0.1	-18.0	-1.5	-95.4	-16.7	95.4	16.7	96.8
	Min Myz	STR 3/ 185	-116.7	-0.1	-13.2	-1.5	-70.9	-16.8	71.0	16.9	72.9

AASHTO Limit State: STR 3 - STRENGTH III

	Max/ Min ID	Combo ID	Fx (kips)	Fy (kips)	Fz (kips)	Mx (ft*kip)	My (ft*kip)	Mz (ft*kip)	Mxy (ft*kip)	Mxz (ft*kip)	Myz (ft*kip)
	Max Fx	STR 3/ 185	-246.2	0.3	6.4	-6.6	-23.1	11.5	24.1	13.2	25.8
	Max Fy	STR 3/ 1	-332.0	1.1	9.0	-13.0	-30.6	23.8	33.3	27.1	38.8
	Max Fz	STR 3/ 59	-497.0	0.3	11.4	-6.6	-43.8	11.5	44.3	13.2	45.3
	Max Mx	STR 3/ 5	-279.7	0.3	8.0	-6.6	-26.0	11.5	26.8	13.2	28.4
	Max My	STR 3/ 185	-246.2	0.3	6.4	-6.6	-23.1	11.5	24.1	13.2	25.8
Load No.	Max Mz	STR 3/ 1	-332.0	1.1	9.0	-13.0	-30.6	23.8	33.3	27.1	38.8
7	Max Mxy	STR 3/ 59	-497.0	0.3	11.4	-6.6	-43.8	11.5	44.3	13.2	45.3
	Max Mxz	STR 3/ 1	-332.0	1.1	9.0	-13.0	-30.6	23.8	33.3	27.1	38.8
Member	Max Myz	STR 3/ 57	-474.4	1.0	11.0	-11.1	-41.8	20.2	43.2	23.0	46.4
750	Min Fx	STR 3/ 59	-497.0	0.3	11.4	-6.6	-43.8	11.5	44.3	13.2	45.3
	Min Fy	STR 3/ 10	-306.6	-0.7	8.6	-8.8	-27.4	5.2	28.8	10.2	27.9
Joint	Min Fz	STR 3/ 185	-246.2	0.3	6.4	-6.6	-23.1	11.5	24.1	13.2	25.8
733	Min Mx	STR 3/ 1	-332.0	1.1	9.0	-13.0	-30.6	23.8	33.3	27.1	38.8
	Min My	STR 3/ 59	-497.0	0.3	11.4	-6.6	-43.8	11.5	44.3	13.2	45.3
	Min Mz	STR 3/ 10	-306.6	-0.7	8.6	-8.8	-27.4	5.2	28.8	10.2	27.9
	Min Mxy	STR 3/ 185	-246.2	0.3	6.4	-6.6	-23.1	11.5	24.1	13.2	25.8
	Min Mxz	STR 3/ 10	-306.6	-0.7	8.6	-8.8	-27.4	5.2	28.8	10.2	27.9
	Min Myz	STR 3/ 190	-273.1	-0.7	6.9	-8.8	-24.5	5.2	26.1	10.2	25.1
	Max Fx	STR 3/ 59	502.5	0.4	-3.8	6.6	-63.7	-12.0	64.1	13.7	64.8
	Max Fy	STR 3/ 10	313.2	3.1	-2.1	8.8	-47.1	-31.4	48.0	32.6	56.6
	Max Fz	STR 3/ 70	302.8	3.1	-1.9	8.8	-45.9	-31.4	46.8	32.6	55.6
	Max Mx	STR 3/ 1	338.6	1.3	-2.5	13.0	-50.1	-24.5	51.7	27.7	55.7
	Max My	STR 3/ 190	277.8	3.1	-2.3	8.8	-39.6	-31.4	40.6	32.6	50.5
Load No.	Max Mz	STR 3/ 5	287.5	0.4	-2.6	6.6	-48.5	-12.0	49.0	13.7	50.0
8	Max Mxy	STR 3/ 58	493.7	0.8	-3.8	9.1	-63.4	-17.5	64.1	19.7	65.8
	Max Mxz	STR 3/ 10	313.2	3.1	-2.1	8.8	-47.1	-31.4	48.0	32.6	56.6
Member	Max Myz	STR 3/ 60	426.2	3.1	-3.5	8.8	-59.2	-31.4	59.9	32.6	67.0
750	Min Fx	STR 3/ 185	252.1	0.4	-2.8	6.6	-41.0	-12.0	41.5	13.7	42.7
	Min Fy	STR 3/ 5	287.5	0.4	-2.6	6.6	-48.5	-12.0	49.0	13.7	50.0
Joint	Min Fz	STR 3/ 174	384.5	0.8	-4.4	9.2	-54.6	-17.5	55.4	19.8	57.3
734	Min Mx	STR 3/ 5	287.5	0.4	-2.6	6.6	-48.5	-12.0	49.0	13.7	50.0
	Min My	STR 3/ 59	502.5	0.4	-3.8	6.6	-63.7	-12.0	64.1	13.7	64.8
	Min Mz	STR 3/ 10	313.2	3.1	-2.1	8.8	-47.1	-31.4	48.0	32.6	56.6
	Min Mxy	STR 3/ 190	277.8	3.1	-2.3	8.8	-39.6	-31.4	40.6	32.6	50.5
	Min Mxz	STR 3/ 5	287.5	0.4	-2.6	6.6	-48.5	-12.0	49.0	13.7	50.0
	Min Myz	STR 3/ 185	252.1	0.4	-2.8	6.6	-41.0	-12.0	41.5	13.7	42.7

AASHTO Limit State: STR 3 - STRENGTH III

Load No. / Member / Joint	Max/ Min ID	Combo ID	Fx (kips)	Fy (kips)	Fz (kips)	Mx (ft*kip)	My (ft*kip)	Mz (ft*kip)	Mxy (ft*kip)	Mxz (ft*kip)	Myz (ft*kip)
	Max Fx	STR 3/ 179	243.0	0.3	23.5	-0.7	-93.9	17.2	93.9	17.2	95.5
	Max Fy	STR 3/ 1	129.0	0.8	17.4	-1.1	-71.7	35.0	71.7	35.0	79.8
	Max Fz	STR 3/ 179	243.0	0.3	23.5	-0.7	-93.9	17.2	93.9	17.2	95.5
	Max Mx	STR 3/ 10	119.9	-3.5	16.1	-0.4	-66.7	7.7	66.7	7.7	67.1
	Max My	STR 3/ 185	107.2	0.3	14.6	-0.7	-60.9	17.2	60.9	17.2	63.3
Load No.	Max Mz	STR 3/ 1	129.0	0.8	17.4	-1.1	-71.7	35.0	71.7	35.0	79.8
9	Max Mxy	STR 3/ 59	232.6	0.3	23.4	-0.7	-94.7	17.2	94.7	17.2	96.2
	Max Mxz	STR 3/ 1	129.0	0.8	17.4	-1.1	-71.7	35.0	71.7	35.0	79.8
Member	Max Myz	STR 3/ 58	227.3	0.4	23.0	-0.7	-93.3	24.4	93.3	24.4	96.4
753	Min Fx	STR 3/ 65	96.9	0.3	14.5	-0.7	-61.7	17.2	61.7	17.2	64.0
	Min Fy	STR 3/ 10	119.9	-3.5	16.1	-0.4	-66.7	7.7	66.7	7.7	67.1
Joint	Min Fz	STR 3/ 65	96.9	0.3	14.5	-0.7	-61.7	17.2	61.7	17.2	64.0
735	Min Mx	STR 3/ 1	129.0	0.8	17.4	-1.1	-71.7	35.0	71.7	35.0	79.8
	Min My	STR 3/ 59	232.6	0.3	23.4	-0.7	-94.7	17.2	94.7	17.2	96.2
	Min Mz	STR 3/ 10	119.9	-3.5	16.1	-0.4	-66.7	7.7	66.7	7.7	67.1
	Min Mxy	STR 3/ 185	107.2	0.3	14.6	-0.7	-60.9	17.2	60.9	17.2	63.3
	Min Mxz	STR 3/ 10	119.9	-3.5	16.1	-0.4	-66.7	7.7	66.7	7.7	67.1
	Min Myz	STR 3/ 185	107.2	0.3	14.6	-0.7	-60.9	17.2	60.9	17.2	63.3
	Max Fx	STR 3/ 65	-91.6	0.1	-14.3	0.7	-47.9	-17.2	47.9	17.2	50.9
	Max Fy	STR 3/ 10	-114.9	4.8	-15.1	0.4	-53.0	-39.2	53.0	39.2	66.0
	Max Fz	STR 3/ 65	-91.6	0.1	-14.3	0.7	-47.9	-17.2	47.9	17.2	50.9
	Max Mx	STR 3/ 1	-124.0	0.4	-16.4	1.1	-57.1	-33.6	57.1	33.6	66.3
	Max My	STR 3/ 65	-91.6	0.1	-14.3	0.7	-47.9	-17.2	47.9	17.2	50.9
Load No.	Max Mz	STR 3/ 5	-92.9	0.1	-14.8	0.7	-49.5	-17.2	49.5	17.2	52.4
10	Max Mxy	STR 3/ 179	-239.5	0.1	-22.0	0.7	-80.1	-17.2	80.1	17.2	81.9
	Max Mxz	STR 3/ 10	-114.9	4.8	-15.1	0.4	-53.0	-39.2	53.0	39.2	66.0
Member	Max Myz	STR 3/ 178	-234.2	0.4	-21.7	0.7	-78.7	-23.9	78.7	24.0	82.2
753	Min Fx	STR 3/ 179	-239.5	0.1	-22.0	0.7	-80.1	-17.2	80.1	17.2	81.9
	Min Fy	STR 3/ 5	-92.9	0.1	-14.8	0.7	-49.5	-17.2	49.5	17.2	52.4
Joint	Min Fz	STR 3/ 179	-239.5	0.1	-22.0	0.7	-80.1	-17.2	80.1	17.2	81.9
736	Min Mx	STR 3/ 10	-114.9	4.8	-15.1	0.4	-53.0	-39.2	53.0	39.2	66.0
	Min My	STR 3/ 179	-239.5	0.1	-22.0	0.7	-80.1	-17.2	80.1	17.2	81.9
	Min Mz	STR 3/ 10	-114.9	4.8	-15.1	0.4	-53.0	-39.2	53.0	39.2	66.0
	Min Mxy	STR 3/ 65	-91.6	0.1	-14.3	0.7	-47.9	-17.2	47.9	17.2	50.9
	Min Mxz	STR 3/ 5	-92.9	0.1	-14.8	0.7	-49.5	-17.2	49.5	17.2	52.4
	Min Myz	STR 3/ 65	-91.6	0.1	-14.3	0.7	-47.9	-17.2	47.9	17.2	50.9

AASHTO Limit State: STR 3 - STRENGTH III

	Max/ Min ID	Combo ID	Fx (kips)	Fy (kips)	Fz (kips)	Mx (ft*kip)	My (ft*kip)	Mz (ft*kip)	Mxy (ft*kip)	Mxz (ft*kip)	Myz (ft*kip)
	Max Fx	STR 3/ 85	-85.9	0.4	3.5	-7.1	10.0	11.9	12.3	13.9	15.5
	Max Fy	STR 3/ 1	-181.7	1.5	5.0	-14.7	-1.5	25.6	14.8	29.5	25.7
	Max Fz	STR 3/ 19	-274.9	0.4	6.8	-7.1	-10.3	11.8	12.5	13.8	15.6
	Max Mx	STR 3/ 5	-124.3	0.4	3.8	-7.1	5.1	11.9	8.7	13.9	12.9
	Max My	STR 3/ 105	-87.7	0.4	3.5	-7.1	10.5	11.9	12.7	13.9	15.9
Load No.	Max Mz	STR 3/ 1	-181.7	1.5	5.0	-14.7	-1.5	25.6	14.8	29.5	25.7
11	Max Mxy	STR 3/ 138	-303.2	1.0	6.4	-10.2	-17.8	17.5	20.5	20.3	24.9
	Max Mxz	STR 3/ 1	-181.7	1.5	5.0	-14.7	-1.5	25.6	14.8	29.5	25.7
Member	Max Myz	STR 3/ 131	-255.9	1.5	5.4	-14.7	-12.3	25.6	19.2	29.5	28.4
756	Min Fx	STR 3/ 139	-313.3	0.4	6.7	-7.1	-18.9	11.8	20.2	13.8	22.2
	Min Fy	STR 3/ 5	-124.3	0.4	3.8	-7.1	5.1	11.9	8.7	13.9	12.9
Joint	Min Fz	STR 3/ 205	-124.2	0.4	3.4	-7.1	1.4	11.9	7.3	13.9	12.0
737	Min Mx	STR 3/ 1	-181.7	1.5	5.0	-14.7	-1.5	25.6	14.8	29.5	25.7
	Min My	STR 3/ 139	-313.3	0.4	6.7	-7.1	-18.9	11.8	20.2	13.8	22.2
	Min Mz	STR 3/ 9	-239.1	0.4	6.3	-7.1	-8.1	11.8	10.8	13.8	14.3
	Min Mxy	STR 3/ 235	-161.8	0.4	3.9	-7.1	-0.2	11.9	7.1	13.9	11.9
	Min Mxz	STR 3/ 9	-239.1	0.4	6.3	-7.1	-8.1	11.8	10.8	13.8	14.3
	Min Myz	STR 3/ 235	-161.8	0.4	3.9	-7.1	-0.2	11.9	7.1	13.9	11.9
	Max Fx	STR 3/ 139	316.6	0.3	-0.5	7.1	-33.5	-10.5	34.2	12.7	35.1
	Max Fy	STR 3/ 10	155.8	2.0	2.3	11.6	-19.7	-24.4	22.9	27.0	31.4
	Max Fz	STR 3/ 90	117.3	2.0	2.5	11.6	-20.0	-24.4	23.2	27.0	31.5
	Max Mx	STR 3/ 1	188.1	0.8	2.0	14.7	-21.7	-21.0	26.2	25.6	30.2
	Max My	STR 3/ 65	117.3	0.3	2.2	7.1	-17.7	-10.5	19.1	12.7	20.6
Load No.	Max Mz	STR 3/ 5	131.8	0.3	2.1	7.1	-18.3	-10.5	19.7	12.7	21.1
12	Max Mxy	STR 3/ 178	284.7	0.6	-0.4	10.2	-35.5	-15.0	37.0	18.1	38.5
	Max Mxz	STR 3/ 10	155.8	2.0	2.3	11.6	-19.7	-24.4	22.9	27.0	31.4
Member	Max Myz	STR 3/ 176	254.0	0.8	-0.2	13.9	-33.7	-20.4	36.4	24.7	39.4
756	Min Fx	STR 3/ 85	93.4	0.3	2.4	7.1	-18.6	-10.5	20.0	12.7	21.4
	Min Fy	STR 3/ 5	131.8	0.3	2.1	7.1	-18.3	-10.5	19.7	12.7	21.1
Joint	Min Fz	STR 3/ 137	292.2	0.8	-0.5	12.3	-32.1	-18.2	34.4	22.0	36.9
738	Min Mx	STR 3/ 5	131.8	0.3	2.1	7.1	-18.3	-10.5	19.7	12.7	21.1
	Min My	STR 3/ 179	294.5	0.3	-0.4	7.1	-36.1	-10.5	36.8	12.7	37.6
	Min Mz	STR 3/ 10	155.8	2.0	2.3	11.6	-19.7	-24.4	22.9	27.0	31.4
	Min Mxy	STR 3/ 65	117.3	0.3	2.2	7.1	-17.7	-10.5	19.1	12.7	20.6
	Min Mxz	STR 3/ 5	131.8	0.3	2.1	7.1	-18.3	-10.5	19.7	12.7	21.1
	Min Myz	STR 3/ 65	117.3	0.3	2.2	7.1	-17.7	-10.5	19.1	12.7	20.6

AASHTO Limit State: STR 3 - STRENGTH III

	Max/ Min ID	Combo ID	Fx (kips)	Fy (kips)	Fz (kips)	Mx (ft*kip)	My (ft*kip)	Mz (ft*kip)	Mxy (ft*kip)	Mxz (ft*kip)	Myz (ft*kip)
	Max Fx	STR 3/ 139	87.9	0.1	14.8	-2.5	-54.4	18.5	54.5	18.7	57.5
	Max Fy	STR 3/ 1	-37.8	0.8	7.4	-5.0	-27.5	39.2	28.0	39.5	47.9
	Max Fz	STR 3/ 139	87.9	0.1	14.8	-2.5	-54.4	18.5	54.5	18.7	57.5
	Max Mx	STR 3/ 5	-78.0	0.1	4.3	-2.5	-17.3	18.5	17.5	18.7	25.3
	Max My	STR 3/ 105	-93.1	0.1	1.0	-2.5	-6.8	18.5	7.2	18.7	19.7
Load No.	Max Mz	STR 3/ 1	-37.8	0.8	7.4	-5.0	-27.5	39.2	28.0	39.5	47.9
13	Max Mxy	STR 3/ 139	87.9	0.1	14.8	-2.5	-54.4	18.5	54.5	18.7	57.5
	Max Mxz	STR 3/ 1	-37.8	0.8	7.4	-5.0	-27.5	39.2	28.0	39.5	47.9
Member	Max Myz	STR 3/ 137	70.6	0.7	13.5	-4.1	-50.0	32.6	50.1	32.9	59.7
759	Min Fx	STR 3/ 85	-94.5	0.1	1.5	-2.5	-8.2	18.5	8.6	18.7	20.2
	Min Fy	STR 3/ 10	-46.2	-2.5	6.1	-4.6	-22.6	21.0	23.1	21.5	30.9
Joint	Min Fz	STR 3/ 105	-93.1	0.1	1.0	-2.5	-6.8	18.5	7.2	18.7	19.7
739	Min Mx	STR 3/ 1	-37.8	0.8	7.4	-5.0	-27.5	39.2	28.0	39.5	47.9
	Min My	STR 3/ 139	87.9	0.1	14.8	-2.5	-54.4	18.5	54.5	18.7	57.5
	Min Mz	STR 3/ 5	-78.0	0.1	4.3	-2.5	-17.3	18.5	17.5	18.7	25.3
	Min Mxy	STR 3/ 105	-93.1	0.1	1.0	-2.5	-6.8	18.5	7.2	18.7	19.7
	Min Mxz	STR 3/ 5	-78.0	0.1	4.3	-2.5	-17.3	18.5	17.5	18.7	25.3
	Min Myz	STR 3/ 105	-93.1	0.1	1.0	-2.5	-6.8	18.5	7.2	18.7	19.7
	Max Fx	STR 3/ 85	99.0	0.1	-0.7	2.5	0.7	-18.6	2.6	18.8	18.6
	Max Fy	STR 3/ 10	50.6	3.6	-4.6	4.6	-14.4	-42.6	15.2	42.8	44.9
	Max Fz	STR 3/ 105	97.7	0.1	-0.2	2.5	3.1	-18.6	4.0	18.8	18.9
	Max Mx	STR 3/ 1	42.2	0.3	-5.9	5.0	-18.8	-37.1	19.4	37.4	41.6
	Max My	STR 3/ 105	97.7	0.1	-0.2	2.5	3.1	-18.6	4.0	18.8	18.9
Load No.	Max Mz	STR 3/ 5	82.5	0.1	-3.5	2.5	-9.7	-18.6	10.0	18.8	21.0
14	Max Mxy	STR 3/ 129	-65.2	0.1	-12.6	2.5	-43.1	-18.6	43.2	18.8	47.0
	Max Mxz	STR 3/ 10	50.6	3.6	-4.6	4.6	-14.4	-42.6	15.2	42.8	44.9
Member	Max Myz	STR 3/ 130	-16.5	3.6	-8.9	4.6	-29.7	-42.6	30.0	42.8	51.9
759	Min Fx	STR 3/ 139	-85.1	0.1	-13.0	2.5	-43.1	-18.6	43.2	18.8	47.0
	Min Fy	STR 3/ 5	82.5	0.1	-3.5	2.5	-9.7	-18.6	10.0	18.8	21.0
Joint	Min Fz	STR 3/ 139	-85.1	0.1	-13.0	2.5	-43.1	-18.6	43.2	18.8	47.0
740	Min Mx	STR 3/ 5	82.5	0.1	-3.5	2.5	-9.7	-18.6	10.0	18.8	21.0
	Min My	STR 3/ 129	-65.2	0.1	-12.6	2.5	-43.1	-18.6	43.2	18.8	47.0
	Min Mz	STR 3/ 10	50.6	3.6	-4.6	4.6	-14.4	-42.6	15.2	42.8	44.9
	Min Mxy	STR 3/ 85	99.0	0.1	-0.7	2.5	0.7	-18.6	2.6	18.8	18.6
	Min Mxz	STR 3/ 5	82.5	0.1	-3.5	2.5	-9.7	-18.6	10.0	18.8	21.0
	Min Myz	STR 3/ 85	99.0	0.1	-0.7	2.5	0.7	-18.6	2.6	18.8	18.6

AASHTO Limit State: STR 3 - STRENGTH III

	Max/ Min ID	Combo ID	Fx (kips)	Fy (kips)	Fz (kips)	Mx (ft*kip)	My (ft*kip)	Mz (ft*kip)	Mxy (ft*kip)	Mxz (ft*kip)	Myz (ft*kip)
	Max Fx	STR 3/ 115	336.1	0.7	-3.0	-8.7	73.0	14.0	73.5	16.5	74.3
	Max Fy	STR 3/ 1	74.9	2.0	1.4	-18.6	32.9	31.4	37.8	36.5	45.5
	Max Fz	STR 3/ 129	-101.4	0.7	3.9	-8.7	6.3	14.0	10.7	16.5	15.4
	Max Mx	STR 3/ 5	139.3	0.7	0.0	-8.7	40.7	14.0	41.7	16.5	43.1
	Max My	STR 3/ 115	336.1	0.7	-3.0	-8.7	73.0	14.0	73.5	16.5	74.3
Load No.	Max Mz	STR 3/ 1	74.9	2.0	1.4	-18.6	32.9	31.4	37.8	36.5	45.5
15	Max Mxy	STR 3/ 115	336.1	0.7	-3.0	-8.7	73.0	14.0	73.5	16.5	74.3
	Max Mxz	STR 3/ 1	74.9	2.0	1.4	-18.6	32.9	31.4	37.8	36.5	45.5
Member	Max Myz	STR 3/ 114	324.8	1.3	-2.8	-12.7	71.6	21.0	72.7	24.6	74.6
762	Min Fx	STR 3/ 129	-101.4	0.7	3.9	-8.7	6.3	14.0	10.7	16.5	15.4
	Min Fy	STR 3/ 5	139.3	0.7	0.0	-8.7	40.7	14.0	41.7	16.5	43.1
Joint	Min Fz	STR 3/ 115	336.1	0.7	-3.0	-8.7	73.0	14.0	73.5	16.5	74.3
741	Min Mx	STR 3/ 1	74.9	2.0	1.4	-18.6	32.9	31.4	37.8	36.5	45.5
	Min My	STR 3/ 129	-101.4	0.7	3.9	-8.7	6.3	14.0	10.7	16.5	15.4
	Min Mz	STR 3/ 5	139.3	0.7	0.0	-8.7	40.7	14.0	41.7	16.5	43.1
	Min Mxy	STR 3/ 129	-101.4	0.7	3.9	-8.7	6.3	14.0	10.7	16.5	15.4
	Min Mxz	STR 3/ 5	139.3	0.7	0.0	-8.7	40.7	14.0	41.7	16.5	43.1
	Min Myz	STR 3/ 129	-101.4	0.7	3.9	-8.7	6.3	14.0	10.7	16.5	15.4
	Max Fx	STR 3/ 129	104.6	0.1	2.3	8.7	-17.9	-10.1	19.9	13.3	20.6
	Max Fy	STR 3/ 10	-97.5	1.0	6.0	18.3	0.6	-22.5	18.4	29.1	22.5
	Max Fz	STR 3/ 114	-317.7	0.3	9.0	12.7	12.3	-14.4	17.7	19.2	19.0
	Max Mx	STR 3/ 1	-68.8	0.4	5.7	18.6	-1.8	-20.0	18.7	27.3	20.1
	Max My	STR 3/ 115	-328.7	0.1	9.0	8.7	13.2	-10.1	15.8	13.3	16.6
Load No.	Max Mz	STR 3/ 5	-131.9	0.1	6.0	8.7	2.9	-10.1	9.1	13.3	10.5
16	Max Mxy	STR 3/ 121	41.4	0.4	2.6	18.6	-13.3	-20.0	22.9	27.3	24.0
	Max Mxz	STR 3/ 10	-97.5	1.0	6.0	18.3	0.6	-22.5	18.4	29.1	22.5
Member	Max Myz	STR 3/ 130	12.7	1.0	2.9	18.3	-10.9	-22.5	21.3	29.1	25.0
762	Min Fx	STR 3/ 115	-328.7	0.1	9.0	8.7	13.2	-10.1	15.8	13.3	16.6
	Min Fy	STR 3/ 5	-131.9	0.1	6.0	8.7	2.9	-10.1	9.1	13.3	10.5
Joint	Min Fz	STR 3/ 128	93.5	0.3	2.3	12.7	-17.1	-14.4	21.3	19.2	22.4
742	Min Mx	STR 3/ 5	-131.9	0.1	6.0	8.7	2.9	-10.1	9.1	13.3	10.5
	Min My	STR 3/ 129	104.6	0.1	2.3	8.7	-17.9	-10.1	19.9	13.3	20.6
	Min Mz	STR 3/ 10	-97.5	1.0	6.0	18.3	0.6	-22.5	18.4	29.1	22.5
	Min Mxy	STR 3/ 225	-156.8	0.1	4.8	8.7	-0.1	-10.1	8.7	13.3	10.1
	Min Mxz	STR 3/ 5	-131.9	0.1	6.0	8.7	2.9	-10.1	9.1	13.3	10.5
	Min Myz	STR 3/ 225	-156.8	0.1	4.8	8.7	-0.1	-10.1	8.7	13.3	10.1

AASHTO Limit State: STR 3 - STRENGTH III

	Max/ Min ID	Combo ID	Fx (kips)	Fy (kips)	Fz (kips)	Mx (ft*kip)	My (ft*kip)	Mz (ft*kip)	Mxy (ft*kip)	Mxz (ft*kip)	Myz (ft*kip)
	Max Fx	STR 3/ 129	31.5	0.6	7.9	-4.6	-14.3	22.8	15.1	23.2	26.9
	Max Fy	STR 3/ 1	-98.9	2.0	-1.6	-9.9	24.6	50.4	26.6	51.4	56.1
	Max Fz	STR 3/ 129	31.5	0.6	7.9	-4.6	-14.3	22.8	15.1	23.2	26.9
	Max Mx	STR 3/ 5	-140.4	0.6	-4.6	-4.6	35.8	22.9	36.1	23.4	42.5
	Max My	STR 3/ 115	-228.8	0.6	-18.1	-4.6	86.7	22.9	86.8	23.4	89.6
Load No.	Max Mz	STR 3/ 1	-98.9	2.0	-1.6	-9.9	24.6	50.4	26.6	51.4	56.1
17	Max Mxy	STR 3/ 115	-228.8	0.6	-18.1	-4.6	86.7	22.9	86.8	23.4	89.6
	Max Mxz	STR 3/ 1	-98.9	2.0	-1.6	-9.9	24.6	50.4	26.6	51.4	56.1
Member	Max Myz	STR 3/ 113	-210.8	1.5	-16.9	-8.1	81.9	42.0	82.3	42.8	92.0
765	Min Fx	STR 3/ 115	-228.8	0.6	-18.1	-4.6	86.7	22.9	86.8	23.4	89.6
	Min Fy	STR 3/ 10	-112.8	-0.1	-2.9	-11.3	28.4	44.4	30.6	45.8	52.7
Joint	Min Fz	STR 3/ 115	-228.8	0.6	-18.1	-4.6	86.7	22.9	86.8	23.4	89.6
743	Min Mx	STR 3/ 10	-112.8	-0.1	-2.9	-11.3	28.4	44.4	30.6	45.8	52.7
	Min My	STR 3/ 129	31.5	0.6	7.9	-4.6	-14.3	22.8	15.1	23.2	26.9
	Min Mz	STR 3/ 129	31.5	0.6	7.9	-4.6	-14.3	22.8	15.1	23.2	26.9
	Min Mxy	STR 3/ 149	-15.8	0.6	2.6	-4.6	6.0	22.8	7.5	23.2	23.5
	Min Mxz	STR 3/ 129	31.5	0.6	7.9	-4.6	-14.3	22.8	15.1	23.2	26.9
	Min Myz	STR 3/ 149	-15.8	0.6	2.6	-4.6	6.0	22.8	7.5	23.2	23.5
	Max Fx	STR 3/ 115	232.9	-0.3	19.2	4.6	35.0	-20.2	35.3	20.7	40.4
	Max Fy	STR 3/ 10	116.7	1.3	4.6	11.3	-3.5	-49.1	11.9	50.4	49.3
	Max Fz	STR 3/ 115	232.9	-0.3	19.2	4.6	35.0	-20.2	35.3	20.7	40.4
	Max Mx	STR 3/ 10	116.7	1.3	4.6	11.3	-3.5	-49.1	11.9	50.4	49.3
	Max My	STR 3/ 115	232.9	-0.3	19.2	4.6	35.0	-20.2	35.3	20.7	40.4
Load No.	Max Mz	STR 3/ 5	144.5	-0.3	5.6	4.6	-2.6	-20.2	5.3	20.7	20.3
18	Max Mxy	STR 3/ 120	205.1	1.3	18.2	11.3	34.2	-49.1	36.0	50.4	59.9
	Max Mxz	STR 3/ 10	116.7	1.3	4.6	11.3	-3.5	-49.1	11.9	50.4	49.3
Member	Max Myz	STR 3/ 120	205.1	1.3	18.2	11.3	34.2	-49.1	36.0	50.4	59.9
765	Min Fx	STR 3/ 129	-28.9	-0.3	-6.0	4.6	-30.6	-20.2	30.9	20.7	36.6
	Min Fy	STR 3/ 1	102.8	-0.8	3.4	9.9	-8.1	-41.2	12.8	42.3	41.9
Joint	Min Fz	STR 3/ 129	-28.9	-0.3	-6.0	4.6	-30.6	-20.2	30.9	20.7	36.6
744	Min Mx	STR 3/ 5	144.5	-0.3	5.6	4.6	-2.6	-20.2	5.3	20.7	20.3
	Min My	STR 3/ 129	-28.9	-0.3	-6.0	4.6	-30.6	-20.2	30.9	20.7	36.6
	Min Mz	STR 3/ 10	116.7	1.3	4.6	11.3	-3.5	-49.1	11.9	50.4	49.3
	Min Mxy	STR 3/ 159	39.1	-0.3	4.8	4.6	-0.7	-20.2	4.7	20.7	20.2
	Min Mxz	STR 3/ 5	144.5	-0.3	5.6	4.6	-2.6	-20.2	5.3	20.7	20.3
	Min Myz	STR 3/ 159	39.1	-0.3	4.8	4.6	-0.7	-20.2	4.7	20.7	20.2

AASHTO Limit State: STR 3 - STRENGTH III

	Max/ Min ID	Combo ID	Fx (kips)	Fy (kips)	Fz (kips)	Mx (ft*kip)	My (ft*kip)	Mz (ft*kip)	Mxy (ft*kip)	Mxz (ft*kip)	Myz (ft*kip)
	Max Fx	STR 3/ 115	939.0	1.1	-2.1	-11.2	87.0	20.3	87.7	23.2	89.3
	Max Fy	STR 3/ 10	347.0	3.4	4.2	-29.0	12.0	52.9	31.4	60.3	54.3
	Max Fz	STR 3/ 129	63.7	1.1	6.5	-11.2	-21.4	20.3	24.1	23.1	29.4
	Max Mx	STR 3/ 5	398.5	1.1	3.6	-11.2	15.5	20.3	19.2	23.2	25.6
	Max My	STR 3/ 115	939.0	1.1	-2.1	-11.2	87.0	20.3	87.7	23.2	89.3
Load No.	Max Mz	STR 3/ 10	347.0	3.4	4.2	-29.0	12.0	52.9	31.4	60.3	54.3
19	Max Mxy	STR 3/ 120	887.4	3.4	-1.5	-29.0	83.5	52.9	88.4	60.3	98.9
	Max Mxz	STR 3/ 10	347.0	3.4	4.2	-29.0	12.0	52.9	31.4	60.3	54.3
Member	Max Myz	STR 3/ 120	887.4	3.4	-1.5	-29.0	83.5	52.9	88.4	60.3	98.9
768	Min Fx	STR 3/ 129	63.7	1.1	6.5	-11.2	-21.4	20.3	24.1	23.1	29.4
	Min Fy	STR 3/ 5	398.5	1.1	3.6	-11.2	15.5	20.3	19.2	23.2	25.6
Joint	Min Fz	STR 3/ 115	939.0	1.1	-2.1	-11.2	87.0	20.3	87.7	23.2	89.3
745	Min Mx	STR 3/ 10	347.0	3.4	4.2	-29.0	12.0	52.9	31.4	60.3	54.3
	Min My	STR 3/ 129	63.7	1.1	6.5	-11.2	-21.4	20.3	24.1	23.1	29.4
	Min Mz	STR 3/ 125	217.6	1.1	3.9	-11.2	-0.9	20.3	11.2	23.1	20.3
	Min Mxy	STR 3/ 125	217.6	1.1	3.9	-11.2	-0.9	20.3	11.2	23.1	20.3
	Min Mxz	STR 3/ 125	217.6	1.1	3.9	-11.2	-0.9	20.3	11.2	23.1	20.3
	Min Myz	STR 3/ 125	217.6	1.1	3.9	-11.2	-0.9	20.3	11.2	23.1	20.3
	Max Fx	STR 3/ 129	-60.5	-0.1	0.8	11.2	-26.4	-9.8	28.7	14.9	28.2
	Max Fy	STR 3/ 5	-390.3	-0.1	3.8	11.2	-14.6	-9.8	18.4	14.9	17.6
	Max Fz	STR 3/ 120	-880.8	-0.6	10.0	29.0	9.4	-21.3	30.5	36.0	23.3
	Max Mx	STR 3/ 10	-340.4	-0.6	4.4	29.0	-12.2	-21.3	31.5	36.0	24.5
	Max My	STR 3/ 120	-880.8	-0.6	10.0	29.0	9.4	-21.3	30.5	36.0	23.3
Load No.	Max Mz	STR 3/ 5	-390.3	-0.1	3.8	11.2	-14.6	-9.8	18.4	14.9	17.6
20	Max Mxy	STR 3/ 130	-161.3	-0.6	1.6	29.0	-21.0	-21.3	35.8	36.0	29.9
	Max Mxz	STR 3/ 10	-340.4	-0.6	4.4	29.0	-12.2	-21.3	31.5	36.0	24.5
Member	Max Myz	STR 3/ 126	-114.5	-0.3	0.9	23.0	-25.3	-18.8	34.2	29.6	31.5
768	Min Fx	STR 3/ 115	-930.8	-0.1	9.4	11.2	7.0	-9.8	13.2	14.9	12.1
	Min Fy	STR 3/ 10	-340.4	-0.6	4.4	29.0	-12.2	-21.3	31.5	36.0	24.5
Joint	Min Fz	STR 3/ 127	-92.9	-0.3	0.8	20.7	-25.7	-16.7	33.0	26.6	30.7
746	Min Mx	STR 3/ 5	-390.3	-0.1	3.8	11.2	-14.6	-9.8	18.4	14.9	17.6
	Min My	STR 3/ 129	-60.5	-0.1	0.8	11.2	-26.4	-9.8	28.7	14.9	28.2
	Min Mz	STR 3/ 10	-340.4	-0.6	4.4	29.0	-12.2	-21.3	31.5	36.0	24.5
	Min Mxy	STR 3/ 99	-692.5	-0.1	8.3	11.2	0.3	-9.8	11.2	14.9	9.8
	Min Mxz	STR 3/ 5	-390.3	-0.1	3.8	11.2	-14.6	-9.8	18.4	14.9	17.6
	Min Myz	STR 3/ 99	-692.5	-0.1	8.3	11.2	0.3	-9.8	11.2	14.9	9.8

AASHTO Limit State: STR 3 - STRENGTH III

	Max/ Min ID	Combo ID	Fx (kips)	Fy (kips)	Fz (kips)	Mx (ft*kip)	My (ft*kip)	Mz (ft*kip)	Mxy (ft*kip)	Mxz (ft*kip)	Myz (ft*kip)
	Max Fx	STR 3/ 115	85.4	-4.6	97.5	5.3	-610.0	-69.4	610.0	69.6	613.9
	Max Fy	STR 3/ 5	68.9	-4.6	50.0	5.3	-126.0	-69.2	126.1	69.5	143.8
	Max Fz	STR 3/ 115	85.4	-4.6	97.5	5.3	-610.0	-69.4	610.0	69.6	613.9
	Max Mx	STR 3/ 121	45.7	-11.5	29.1	11.7	52.5	-161.5	53.8	162.0	169.9
	Max My	STR 3/ 129	43.2	-4.6	21.4	5.4	119.4	-69.1	119.5	69.3	138.0
Load No.	Max Mz	STR 3/ 125	48.2	-4.6	36.8	5.4	-14.6	-69.1	15.5	69.3	70.7
21	Max Mxy	STR 3/ 115	85.4	-4.6	97.5	5.3	-610.0	-69.4	610.0	69.6	613.9
	Max Mxz	STR 3/ 40	76.0	-12.5	82.2	10.0	-478.1	-190.3	478.2	190.5	514.6
Member	Max Myz	STR 3/ 115	85.4	-4.6	97.5	5.3	-610.0	-69.4	610.0	69.6	613.9
771	Min Fx	STR 3/ 130	42.1	-12.5	31.8	10.0	15.3	-190.0	18.2	190.2	190.6
	Min Fy	STR 3/ 10	62.7	-12.5	44.9	10.0	-96.2	-190.1	96.7	190.3	213.0
Joint	Min Fz	STR 3/ 129	43.2	-4.6	21.4	5.4	119.4	-69.1	119.5	69.3	138.0
747	Min Mx	STR 3/ 5	68.9	-4.6	50.0	5.3	-126.0	-69.2	126.1	69.5	143.8
	Min My	STR 3/ 115	85.4	-4.6	97.5	5.3	-610.0	-69.4	610.0	69.6	613.9
	Min Mz	STR 3/ 40	76.0	-12.5	82.2	10.0	-478.1	-190.3	478.2	190.5	514.6
	Min Mxy	STR 3/ 124	47.8	-7.4	35.4	8.2	-2.7	-106.5	8.6	106.8	106.6
	Min Mxz	STR 3/ 125	48.2	-4.6	36.8	5.4	-14.6	-69.1	15.5	69.3	70.7
	Min Myz	STR 3/ 9	63.9	-4.6	34.6	5.3	7.9	-69.2	9.6	69.5	69.7
	Max Fx	STR 3/ 130	-32.9	10.4	-31.8	-10.0	-428.2	41.9	428.3	43.0	430.2
	Max Fy	STR 3/ 10	-50.0	10.4	-44.9	-10.0	-487.4	41.9	487.5	43.0	489.2
	Max Fz	STR 3/ 129	-34.0	3.9	-22.8	-5.4	-406.8	13.6	406.8	14.6	407.0
	Max Mx	STR 3/ 5	-56.1	3.9	-48.6	-5.3	-512.7	13.6	512.8	14.6	512.9
	Max My	STR 3/ 129	-34.0	3.9	-22.8	-5.4	-406.8	13.6	406.8	14.6	407.0
Load No.	Max Mz	STR 3/ 10	-50.0	10.4	-44.9	-10.0	-487.4	41.9	487.5	43.0	489.2
22	Max Mxy	STR 3/ 115	-72.7	3.9	-96.1	-5.3	-644.8	13.5	644.9	14.5	645.0
	Max Mxz	STR 3/ 130	-32.9	10.4	-31.8	-10.0	-428.2	41.9	428.3	43.0	430.2
Member	Max Myz	STR 3/ 115	-72.7	3.9	-96.1	-5.3	-644.8	13.5	644.9	14.5	645.0
771	Min Fx	STR 3/ 115	-72.7	3.9	-96.1	-5.3	-644.8	13.5	644.9	14.5	645.0
	Min Fy	STR 3/ 5	-56.1	3.9	-48.6	-5.3	-512.7	13.6	512.8	14.6	512.9
Joint	Min Fz	STR 3/ 115	-72.7	3.9	-96.1	-5.3	-644.8	13.5	644.9	14.5	645.0
748	Min Mx	STR 3/ 121	-36.5	9.2	-29.1	-11.7	-430.1	27.2	430.3	29.6	431.0
	Min My	STR 3/ 115	-72.7	3.9	-96.1	-5.3	-644.8	13.5	644.9	14.5	645.0
	Min Mz	STR 3/ 15	-64.2	3.9	-70.4	-5.3	-564.1	13.5	564.2	14.5	564.3
	Min Mxy	STR 3/ 129	-34.0	3.9	-22.8	-5.4	-406.8	13.6	406.8	14.6	407.0
	Min Mxz	STR 3/ 15	-64.2	3.9	-70.4	-5.3	-564.1	13.5	564.2	14.5	564.3
	Min Myz	STR 3/ 129	-34.0	3.9	-22.8	-5.4	-406.8	13.6	406.8	14.6	407.0

Limit State: STRENGTH III

TU Uniform Temperature
LF: 0.5
TU1: TU-
TU2: TU+
TU3: TU+Temp. Diff.

DC DL Structural Components & Attachments
LF1: 1.25
LF2: 0.9
DC1: DC

FR Friction
LF: 1
FR1: CR+SH+PT_EOC
FR2: CR+SH+PT_D10K

WS Wind Load on Structure
LF: 1.4
WS1: WS_0 DEG
WS2: WS_15 DEG
WS3: WS_30 DEG
WS4: WS_45 DEG
WS5: WS_60 DEG
WS6: WS_-15 DEG
WS7: WS_-30 DEG
WS8: WS_-45 DEG
WS9: WS_-60 DEG
WS10: WS+WUP

DW DL Wearing Surfaces & Utilities
LF1: 1.5
LF2: 0.65
DW1: DW

Combo ID	Load Combinations
STR 3/ 1	1.00*(DC1*1.25 + DW1*1.50 + TU1*0.50 + FR1*1.00 + WS1*1.40)
STR 3/ 2	1.00*(DC1*1.25 + DW1*1.50 + TU1*0.50 + FR1*1.00 + WS2*1.40)
STR 3/ 3	1.00*(DC1*1.25 + DW1*1.50 + TU1*0.50 + FR1*1.00 + WS3*1.40)
STR 3/ 4	1.00*(DC1*1.25 + DW1*1.50 + TU1*0.50 + FR1*1.00 + WS4*1.40)
STR 3/ 5	1.00*(DC1*1.25 + DW1*1.50 + TU1*0.50 + FR1*1.00 + WS5*1.40)
STR 3/ 6	1.00*(DC1*1.25 + DW1*1.50 + TU1*0.50 + FR1*1.00 + WS6*1.40)
STR 3/ 7	1.00*(DC1*1.25 + DW1*1.50 + TU1*0.50 + FR1*1.00 + WS7*1.40)
STR 3/ 8	1.00*(DC1*1.25 + DW1*1.50 + TU1*0.50 + FR1*1.00 + WS8*1.40)
STR 3/ 9	1.00*(DC1*1.25 + DW1*1.50 + TU1*0.50 + FR1*1.00 + WS9*1.40)
STR 3/ 10	1.00*(DC1*1.25 + DW1*1.50 + TU1*0.50 + FR1*1.00 + WS10*1.40)
STR 3/ 11	1.00*(DC1*1.25 + DW1*1.50 + TU1*0.50 + FR2*1.00 + WS1*1.40)
STR 3/ 12	1.00*(DC1*1.25 + DW1*1.50 + TU1*0.50 + FR2*1.00 + WS2*1.40)
STR 3/ 13	1.00*(DC1*1.25 + DW1*1.50 + TU1*0.50 + FR2*1.00 + WS3*1.40)
STR 3/ 14	1.00*(DC1*1.25 + DW1*1.50 + TU1*0.50 + FR2*1.00 + WS4*1.40)
STR 3/ 15	1.00*(DC1*1.25 + DW1*1.50 + TU1*0.50 + FR2*1.00 + WS5*1.40)
STR 3/ 16	1.00*(DC1*1.25 + DW1*1.50 + TU1*0.50 + FR2*1.00 + WS6*1.40)
STR 3/ 17	1.00*(DC1*1.25 + DW1*1.50 + TU1*0.50 + FR2*1.00 + WS7*1.40)
STR 3/ 18	1.00*(DC1*1.25 + DW1*1.50 + TU1*0.50 + FR2*1.00 + WS8*1.40)
STR 3/ 19	1.00*(DC1*1.25 + DW1*1.50 + TU1*0.50 + FR2*1.00 + WS9*1.40)

Limit State: STRENGTH III

TU Uniform Temperature
LF: 0.5
TU1: TU-
TU2: TU+
TU3: TU+Temp. Diff.

DC DL Structural Components & Attachments
LF1: 1.25
LF2: 0.9
DC1: DC

FR Friction
LF: 1
FR1: CR+SH+PT_EOC
FR2: CR+SH+PT_D10K

WS Wind Load on Structure
LF: 1.4
WS1: WS_0 DEG
WS2: WS_15 DEG
WS3: WS_30 DEG
WS4: WS_45 DEG
WS5: WS_60 DEG
WS6: WS_-15 DEG
WS7: WS_-30 DEG
WS8: WS_-45 DEG
WS9: WS_-60 DEG
WS10: WS+WUP

DW DL Wearing Surfaces & Utilities
LF1: 1.5
LF2: 0.65
DW1: DW

Load (Row) Number	User's Load ID	Member ID	Joint ID	Fx (kips)	Fy (kips)	Fz (kips)	Mx (ft*kip)	My (ft*kip)	Mz (ft*kip)
1	CR+SH+PT_D10K	741	727	134.9	0	-1.8	0	27.1	0
2	CR+SH+PT_D10K	741	728	-134.9	0	1.8	0	14.2	0
3	CR+SH+PT_D10K	744	729	-207.1	0	1.5	0	-11.8	0
4	CR+SH+PT_D10K	744	730	207.1	0	-1.5	0	-9.9	0
5	CR+SH+PT_D10K	747	731	139.6	0	13.9	0	-55.7	0
6	CR+SH+PT_D10K	747	732	-139.6	0	-13.9	0	-63.2	0
7	CR+SH+PT_D10K	750	733	-300.6	0	4.3	0	-29.1	0
8	CR+SH+PT_D10K	750	734	300.6	0	-4.3	0	-31.8	0
9	CR+SH+PT_D10K	753	735	208.6	0	19.6	0	-75.9	0
10	CR+SH+PT_D10K	753	736	-208.6	0	-19.6	0	-73.5	0
11	CR+SH+PT_D10K	756	737	-316.8	0	4.9	0	-30.7	0
12	CR+SH+PT_D10K	756	738	316.8	0	-4.9	0	-39.6	0
13	CR+SH+PT_D10K	759	739	208.2	0	19.7	0	-72.5	0
14	CR+SH+PT_D10K	759	740	-208.2	0	-19.7	0	-65.7	0
15	CR+SH+PT_D10K	762	741	-197.9	0	3.5	0	-14.1	0
16	CR+SH+PT_D10K	762	742	197.9	0	-3.5	0	-36.7	0
17	CR+SH+PT_D10K	765	743	168.3	0	13.1	0	-41.7	0
18	CR+SH+PT_D10K	765	744	-168.3	0	-13.1	0	-43.8	0
19	CR+SH+PT_D10K	768	745	49.6	0	2.1	0	-2.5	0
20	CR+SH+PT_D10K	768	746	-49.6	0	-2.1	0	-32.5	0
21	CR+SH+PT_D10K	771	747	4.1	0	28.7	0	-8.9	0
22	CR+SH+PT_D10K	771	748	-4.1	0	-28.7	0	-363.2	-0.1

Load (Row) Number	User's Load ID	Member ID	Joint ID	Fx (kips)	Fy (kips)	Fz (kips)	Mx (ft*kip)	My (ft*kip)	Mz (ft*kip)
1	CR+SH+PT_EOC	741	727	175.9	0	-1.6	0	24.4	0
2	CR+SH+PT_EOC	741	728	-175.9	0	1.6	0	11.9	0
3	CR+SH+PT_EOC	744	729	-183.7	0	1.5	0	-11	0
4	CR+SH+PT_EOC	744	730	183.7	0	-1.5	0	-10.8	0
5	CR+SH+PT_EOC	747	731	125.6	0	12.8	0	-52.3	0
6	CR+SH+PT_EOC	747	732	-125.6	0	-12.8	0	-56.9	0
7	CR+SH+PT_EOC	750	733	-247.9	0	3.7	0	-23.6	0
8	CR+SH+PT_EOC	750	734	247.9	0	-3.7	0	-28	0
9	CR+SH+PT_EOC	753	735	173.5	0	17.2	0	-66.3	0
10	CR+SH+PT_EOC	753	736	-173.5	0	-17.2	0	-64.9	0
11	CR+SH+PT_EOC	756	737	-281	0	4.4	0	-28.5	0
12	CR+SH+PT_EOC	756	738	281	0	-4.4	0	-35.1	0
13	CR+SH+PT_EOC	759	739	188.3	0	19.3	0	-69.5	0
14	CR+SH+PT_EOC	759	740	-188.3	0	-19.3	0	-65.7	0
15	CR+SH+PT_EOC	762	741	-259.6	0	4.6	0	-26.8	0
16	CR+SH+PT_EOC	762	742	259.6	0	-4.6	0	-38.4	0
17	CR+SH+PT_EOC	765	743	189.1	0	18.6	0	-62.1	0
18	CR+SH+PT_EOC	765	744	-189.1	0	-18.6	0	-59.2	0
19	CR+SH+PT_EOC	768	745	-214.1	0	4.7	0	-36.3	0
20	CR+SH+PT_EOC	768	746	214.1	0	-4.7	0	-41.1	0
21	CR+SH+PT_EOC	771	747	-4	0	6.9	0	221.9	0.1
22	CR+SH+PT_EOC	771	748	4	0	-6.9	0	-311.8	0
1	DC	741	727	685.6	0	5.4	0	-4.7	0
2	DC	741	728	-679.2	0	4.7	0	-2.8	0
3	DC	744	729	-356.6	0	1.6	0	12.7	0
4	DC	744	730	362.6	0	3.2	0	-1.1	0
5	DC	747	731	68.2	0	4.4	0	-8.5	0
6	DC	747	732	-63.7	0	-4.2	0	-28	0
7	DC	750	733	-66	0	4.2	0	-4	0
8	DC	750	734	71.3	0	1	0	-18.1	0
9	DC	753	735	-29.5	0	-0.4	0	-2.1	0
10	DC	753	736	33.5	0	1.2	0	8	0
11	DC	756	737	109.5	0	0.3	0	24.5	0
12	DC	756	738	-104.4	0	5.3	0	11.2	0
13	DC	759	739	-188	0	-11.2	0	39.1	0
14	DC	759	740	191.5	0	12.4	0	43.5	0
15	DC	762	741	319.8	0	-3.2	0	54	0
16	DC	762	742	-314.9	0	8.9	0	33	0
17	DC	765	743	-254.1	0	-18.9	0	79.3	0.1
18	DC	765	744	257.2	0	20.3	0	48.6	0
19	DC	768	745	517	0	-1	0	47.1	0.1
20	DC	768	746	-511.7	0	7.8	0	25	0
21	DC	771	747	59.1	0	37.6	-0.1	-318.5	-0.3
22	DC	771	748	-48.9	0	-37.6	0.1	-169.2	0
1	DW	741	727	9.9	0	-0.2	0	2.5	0
2	DW	741	728	-9.9	0	0.2	0	1.8	0
3	DW	744	729	-22.4	0	-0.3	0	3	0
4	DW	744	730	22.4	0	0.3	0	1.1	0
5	DW	747	731	-5.2	0	-0.1	0	1.9	0
6	DW	747	732	5.2	0	0.1	0	-1.4	0
7	DW	750	733	-12.3	0	0.2	0	-1.7	0
8	DW	750	734	12.3	0	-0.2	0	-1.4	0
9	DW	753	735	1.5	0	0.6	0	-2.6	0
10	DW	753	736	-1.5	0	-0.6	0	-1.9	0
11	DW	756	737	-17.1	0	0.1	0	-1.1	0
12	DW	756	738	17.1	0	-0.1	0	-0.7	0
13	DW	759	739	0.6	0	0.6	0	-2.2	0
14	DW	759	740	-0.6	0	-0.6	0	-2.1	0
15	DW	762	741	-14	0	0.1	0	-0.8	0
16	DW	762	742	14	0	-0.1	0	-1.1	0
17	DW	765	743	4	0	0.5	0	-1.5	0
18	DW	765	744	-4	0	-0.5	0	-1.6	0
19	DW	768	745	-14.9	0	0.3	0	-3.9	0
20	DW	768	746	14.9	0	-0.3	0	-1.5	0
21	DW	771	747	-0.6	0	-2.6	0	27.8	0
22	DW	771	748	0.6	0	2.6	0	5.9	0

Load (Row) Number	User's Load ID	Member ID	Joint ID	Fx (kips)	Fy (kips)	Fz (kips)	Mx (ft*kip)	My (ft*kip)	Mz (ft*kip)
1	TU-	741	727	-241.7	0	-1.2	0	12.5	0
2	TU-	741	728	241.7	0	1.2	0	13.9	0
3	TU-	744	729	69.5	0	-1.6	0	11.5	0
4	TU-	744	730	-69.5	0	1.6	0	11.3	0
5	TU-	747	731	-63.3	0	-3.2	0	16.5	0
6	TU-	747	732	63.3	0	3.2	0	10.7	0
7	TU-	750	733	33.8	0	-0.5	0	1.1	0
8	TU-	750	734	-33.8	0	0.5	0	5.3	0
9	TU-	753	735	-19.8	0	-0.5	0	2.2	0
10	TU-	753	736	19.8	0	0.5	0	1.3	0
11	TU-	756	737	-23.9	0	0.2	0	-4	0
12	TU-	756	738	23.9	0	-0.2	0	0.9	0
13	TU-	759	739	16	0	2.3	0	-7.2	0
14	TU-	759	740	-16	0	-2.3	0	-8.6	0
15	TU-	762	741	-88.5	0	1.3	0	-13.2	0
16	TU-	762	742	88.5	0	-1.3	0	-5.9	0
17	TU-	765	743	47.2	0	5.3	0	-20.3	0
18	TU-	765	744	-47.2	0	-5.3	0	-14.5	0
19	TU-	768	745	-176.6	0	1.9	0	-22.8	0
20	TU-	768	746	176.6	0	-1.9	0	-8.1	0
21	TU-	771	747	-5.2	0	-15.5	0	151.1	0.1
22	TU-	771	748	5.2	0	15.5	0	50.2	0
1	TU+	741	727	241.7	0	1.2	0	-12.5	0
2	TU+	741	728	-241.7	0	-1.2	0	-13.9	0
3	TU+	744	729	-69.5	0	1.6	0	-11.5	0
4	TU+	744	730	69.5	0	-1.6	0	-11.3	0
5	TU+	747	731	63.3	0	3.2	0	-16.5	0
6	TU+	747	732	-63.3	0	-3.2	0	-10.7	0
7	TU+	750	733	-33.8	0	0.5	0	-1.1	0
8	TU+	750	734	33.8	0	-0.5	0	-5.3	0
9	TU+	753	735	19.8	0	0.5	0	-2.2	0
10	TU+	753	736	-19.8	0	-0.5	0	-1.3	0
11	TU+	756	737	23.9	0	-0.2	0	4	0
12	TU+	756	738	-23.9	0	0.2	0	-0.9	0
13	TU+	759	739	-16	0	-2.3	0	7.2	0
14	TU+	759	740	16	0	2.3	0	8.6	0
15	TU+	762	741	88.5	0	-1.3	0	13.2	0
16	TU+	762	742	-88.5	0	1.3	0	5.9	0
17	TU+	765	743	-47.2	0	-5.3	0	20.3	0
18	TU+	765	744	47.2	0	5.3	0	14.5	0
19	TU+	768	745	176.6	0	-1.9	0	22.8	0
20	TU+	768	746	-176.6	0	1.9	0	8.1	0
21	TU+	771	747	5.2	0	15.5	0	-151.1	-0.1
22	TU+	771	748	-5.2	0	-15.5	0	-50.2	0
1	TU+Temp. Diff.	741	727	377.8	0	1.6	0	-18.9	0
2	TU+Temp. Diff.	741	728	-377.8	0	-1.6	0	-17.5	0
3	TU+Temp. Diff.	744	729	-144.6	0	3.2	0	-22.2	0
4	TU+Temp. Diff.	744	730	144.6	0	-3.2	0	-24.8	0
5	TU+Temp. Diff.	747	731	124.4	0	6.1	0	-30.7	0
6	TU+Temp. Diff.	747	732	-124.4	0	-6.1	0	-21.6	0
7	TU+Temp. Diff.	750	733	-86.8	0	1.2	0	-5	0
8	TU+Temp. Diff.	750	734	86.8	0	-1.2	0	-11.3	0
9	TU+Temp. Diff.	753	735	55.7	0	2	0	-8.8	0
10	TU+Temp. Diff.	753	736	-55.7	0	-2	0	-6.7	0
11	TU+Temp. Diff.	756	737	20.3	0	-0.1	0	5.1	0
12	TU+Temp. Diff.	756	738	-20.3	0	0.1	0	-4.3	0
13	TU+Temp. Diff.	759	739	-13.3	0	-3.3	0	10.1	0
14	TU+Temp. Diff.	759	740	13.3	0	3.3	0	13.4	0
15	TU+Temp. Diff.	762	741	157.9	0	-2.4	0	24.5	0
16	TU+Temp. Diff.	762	742	-157.9	0	2.4	0	9.4	0
17	TU+Temp. Diff.	765	743	-81.2	0	-10	0	38	0
18	TU+Temp. Diff.	765	744	81.2	0	10	0	27.3	0
19	TU+Temp. Diff.	768	745	351.6	0	-3.7	0	45.9	0
20	TU+Temp. Diff.	768	746	-351.6	0	3.7	0	15.4	0
21	TU+Temp. Diff.	771	747	10.6	0	31.5	0	-307.9	-0.1
22	TU+Temp. Diff.	771	748	-10.6	0	-31.5	0	-101.2	0

Load (Row) Number	User's Load ID	Member ID	Joint ID	Fx (kips)	Fy (kips)	Fz (kips)	Mx (ft*kip)	My (ft*kip)	Mz (ft*kip)
1	WS_0 DEG	741	727	0	-2	0	13.2	0	-19.6
2	WS_0 DEG	741	728	0	-0.7	0	-13.2	0	4.3
3	WS_0 DEG	744	729	0	0.4	0	-9.8	0	19.6
4	WS_0 DEG	744	730	0	1.3	0	9.8	0	-26
5	WS_0 DEG	747	731	0	1	0	2.3	0	27.7
6	WS_0 DEG	747	732	0	0	0	-2.3	0	-23.4
7	WS_0 DEG	750	733	0	0.8	0	-9.3	0	17
8	WS_0 DEG	750	734	0	0.9	0	9.3	0	-17.5
9	WS_0 DEG	753	735	0	0.6	0	-0.8	0	25
10	WS_0 DEG	753	736	0	0.3	0	0.8	0	-24
11	WS_0 DEG	756	737	0	1.1	0	-10.5	0	18.3
12	WS_0 DEG	756	738	0	0.6	0	10.5	0	-15
13	WS_0 DEG	759	739	0	0.6	0	-3.6	0	28
14	WS_0 DEG	759	740	0	0.2	0	3.6	0	-26.5
15	WS_0 DEG	762	741	0	1.4	0	-13.3	0	22.4
16	WS_0 DEG	762	742	0	0.3	0	13.3	0	-14.3
17	WS_0 DEG	765	743	0	1.4	0	-7.1	0	35.9
18	WS_0 DEG	765	744	0	-0.6	0	7.1	0	-29.4
19	WS_0 DEG	768	745	0	2.2	0	-17.6	0	34.2
20	WS_0 DEG	768	746	0	-0.3	0	17.6	0	-13.7
21	WS_0 DEG	771	747	0	-8.2	0	8.4	0	-115.3
22	WS_0 DEG	771	748	0	6.6	0	-8.4	0	19.4
1	WS_15 DEG	741	727	-6.8	-1.9	-0.2	12.7	4	-18.6
2	WS_15 DEG	741	728	6.4	-0.6	0.4	-12.7	2.2	4
3	WS_15 DEG	744	729	5.1	0.4	-0.3	-9.4	1.7	18.7
4	WS_15 DEG	744	730	-5	1.3	0	9.4	0.5	-25
5	WS_15 DEG	747	731	-6	0.9	-0.5	2.3	2.1	26.3
6	WS_15 DEG	747	732	6	0	0.3	-2.3	1.3	-22.5
7	WS_15 DEG	750	733	10.2	0.7	-0.2	-8.8	0.9	16.1
8	WS_15 DEG	750	734	-10	0.9	0	8.8	0.3	-17
9	WS_15 DEG	753	735	-6.1	0.5	-0.5	-0.6	1.6	23.5
10	WS_15 DEG	753	736	6.1	0.4	0.3	0.6	1.4	-23.1
11	WS_15 DEG	756	737	11.4	1	-0.2	-9.9	1.3	17.1
12	WS_15 DEG	756	738	-11.2	0.6	0	9.9	0.7	-14.6
13	WS_15 DEG	759	739	-8	0.5	-0.6	-3.3	2	26.1
14	WS_15 DEG	759	740	8	0.3	0.5	3.3	1.8	-25.4
15	WS_15 DEG	762	741	12.9	1.3	-0.3	-12.4	1.6	20.8
16	WS_15 DEG	762	742	-12.6	0.3	0.1	12.4	0.9	-14
17	WS_15 DEG	765	743	-8.3	1.2	-0.6	-6.5	2.3	33.3
18	WS_15 DEG	765	744	8.4	-0.4	0.4	6.5	1	-28
19	WS_15 DEG	768	745	15.4	2	-0.2	-16.4	2	31.6
20	WS_15 DEG	768	746	-15.2	-0.2	0	16.4	0.3	-13.4
21	WS_15 DEG	771	747	0.5	-7.5	1.5	8.1	-13.5	-105.9
22	WS_15 DEG	771	748	-0.5	6	-1.3	-8.1	-4.8	18.8
1	WS_-15 DEG	741	727	6.8	-1.9	0.2	12.7	-3.9	-18.6
2	WS_-15 DEG	741	728	-6.4	-0.6	-0.4	-12.7	-2.2	4
3	WS_-15 DEG	744	729	-5.1	0.4	0.3	-9.4	-1.7	18.7
4	WS_-15 DEG	744	730	5	1.3	0	9.4	-0.5	-25
5	WS_-15 DEG	747	731	6	0.9	0.5	2.3	-2.1	26.3
6	WS_-15 DEG	747	732	-6	0	-0.3	-2.3	-1.3	-22.5
7	WS_-15 DEG	750	733	-10.2	0.7	0.2	-8.8	-0.9	16.1
8	WS_-15 DEG	750	734	10	0.9	0	8.8	-0.3	-17
9	WS_-15 DEG	753	735	6.1	0.5	0.5	-0.6	-1.6	23.5
10	WS_-15 DEG	753	736	-6.1	0.4	-0.3	0.6	-1.4	-23.1
11	WS_-15 DEG	756	737	-11.4	1	0.2	-9.9	-1.3	17.1
12	WS_-15 DEG	756	738	11.2	0.6	0	9.9	-0.7	-14.6
13	WS_-15 DEG	759	739	8	0.5	0.6	-3.3	-2	26.1
14	WS_-15 DEG	759	740	-8	0.3	-0.5	3.3	-1.8	-25.4
15	WS_-15 DEG	762	741	-12.9	1.3	0.3	-12.4	-1.6	20.8
16	WS_-15 DEG	762	742	12.7	0.3	-0.1	12.4	-0.9	-14
17	WS_-15 DEG	765	743	8.3	1.2	0.6	-6.5	-2.3	33.3
18	WS_-15 DEG	765	744	-8.4	-0.4	-0.4	6.5	-1	-28
19	WS_-15 DEG	768	745	-15.4	2	0.2	-16.4	-2	31.6
20	WS_-15 DEG	768	746	15.2	-0.2	0	16.4	-0.3	-13.4
21	WS_-15 DEG	771	747	-0.5	-7.4	-1.5	8.1	13.5	-105.9
22	WS_-15 DEG	771	748	0.5	6	1.3	-8.1	4.8	18.8

Load (Row) Number	User's Load ID	Member ID	Joint ID	Fx (kips)	Fy (kips)	Fz (kips)	Mx (ft*kip)	My (ft*kip)	Mz (ft*kip)
1	WS_30 DEG	741	727	-15	-1.8	-0.3	11.3	8.3	-16.8
2	WS_30 DEG	741	728	14.1	-0.6	0.8	-11.3	4.7	3.6
3	WS_30 DEG	744	729	10.7	0.4	-0.6	-8.3	3.7	16.7
4	WS_30 DEG	744	730	-10.3	1.2	0.1	8.3	1.1	-22.5
5	WS_30 DEG	747	731	-12.5	0.8	-1	2.1	4.5	23.5
6	WS_30 DEG	747	732	12.5	0.1	0.7	-2.1	2.7	-20.1
7	WS_30 DEG	750	733	21.1	0.7	-0.4	-7.9	1.9	14.4
8	WS_30 DEG	750	734	-20.6	0.8	0	7.9	0.6	-15.3
9	WS_30 DEG	753	735	-12.5	0.4	-1	-0.5	3.2	21
10	WS_30 DEG	753	736	12.5	0.4	0.6	0.5	3	-20.6
11	WS_30 DEG	756	737	23.2	0.9	-0.5	-8.8	2.6	15.4
12	WS_30 DEG	756	738	-22.8	0.6	0.1	8.8	1.4	-13
13	WS_30 DEG	759	739	-16.2	0.5	-1.3	-2.9	4.1	23.3
14	WS_30 DEG	759	740	16.3	0.3	1	2.9	3.6	-22.7
15	WS_30 DEG	762	741	26.1	1.2	-0.6	-11.2	3.1	18.7
16	WS_30 DEG	762	742	-25.6	0.3	0.1	11.2	1.9	-12.5
17	WS_30 DEG	765	743	-16.8	1.1	-1.2	-5.8	4.6	29.9
18	WS_30 DEG	765	744	16.9	-0.4	0.9	5.8	2.2	-25.1
19	WS_30 DEG	768	745	31.2	1.9	-0.5	-14.8	4.1	28.6
20	WS_30 DEG	768	746	-30.6	-0.2	0.1	14.8	0.6	-11.9
21	WS_30 DEG	771	747	1	-6.7	3.1	7.3	-27.2	-95.6
22	WS_30 DEG	771	748	-1	5.4	-2.5	-7.3	-9.5	16.8
1	WS_-30 DEG	741	727	14.9	-1.8	0.3	11.3	-8.3	-16.8
2	WS_-30 DEG	741	728	-14.1	-0.6	-0.8	-11.3	-4.7	3.6
3	WS_-30 DEG	744	729	-10.7	0.4	0.6	-8.3	-3.7	16.7
4	WS_-30 DEG	744	730	10.3	1.2	-0.1	8.3	-1.1	-22.5
5	WS_-30 DEG	747	731	12.5	0.8	1	2.1	-4.5	23.5
6	WS_-30 DEG	747	732	-12.5	0.1	-0.7	-2.1	-2.7	-20.1
7	WS_-30 DEG	750	733	-21	0.7	0.4	-7.9	-1.9	14.4
8	WS_-30 DEG	750	734	20.6	0.8	0	7.9	-0.6	-15.3
9	WS_-30 DEG	753	735	12.4	0.4	1	-0.5	-3.2	21
10	WS_-30 DEG	753	736	-12.5	0.4	-0.6	0.5	-3	-20.6
11	WS_-30 DEG	756	737	-23.2	0.9	0.5	-8.8	-2.6	15.4
12	WS_-30 DEG	756	738	22.7	0.6	-0.1	8.8	-1.4	-13
13	WS_-30 DEG	759	739	16.2	0.5	1.3	-2.9	-4.1	23.3
14	WS_-30 DEG	759	740	-16.3	0.3	-1	2.9	-3.6	-22.7
15	WS_-30 DEG	762	741	-26.1	1.2	0.6	-11.2	-3.1	18.7
16	WS_-30 DEG	762	742	25.6	0.3	-0.1	11.2	-1.8	-12.5
17	WS_-30 DEG	765	743	16.8	1.1	1.2	-5.8	-4.6	29.9
18	WS_-30 DEG	765	744	-16.9	-0.4	-0.9	5.8	-2.2	-25.1
19	WS_-30 DEG	768	745	-31.2	1.9	0.5	-14.8	-4.1	28.6
20	WS_-30 DEG	768	746	30.6	-0.2	-0.1	14.8	-0.6	-11.9
21	WS_-30 DEG	771	747	-1	-6.7	-3.1	7.3	27.2	-95.6
22	WS_-30 DEG	771	748	1	5.4	2.5	-7.3	9.5	16.8
1	WS_45 DEG	741	727	-22.2	-1.3	-0.4	9.3	12.2	-13.4
2	WS_45 DEG	741	728	20.9	-0.4	1.2	-9.3	6.9	2.8
3	WS_45 DEG	744	729	15.8	0.2	-0.9	-7	5.4	13.8
4	WS_45 DEG	744	730	-15.2	0.9	0.1	7	1.7	-18.2
5	WS_45 DEG	747	731	-18.4	0.7	-1.5	1.7	6.6	19.5
6	WS_45 DEG	747	732	18.4	0	1	-1.7	4	-16.7
7	WS_45 DEG	750	733	30.8	0.5	-0.6	-6.6	2.7	11.8
8	WS_45 DEG	750	734	-30.1	0.6	-0.1	6.6	0.9	-12.5
9	WS_45 DEG	753	735	-18.2	0.3	-1.4	-0.5	4.6	17.4
10	WS_45 DEG	753	736	18.3	0.3	0.9	0.5	4.4	-17.1
11	WS_45 DEG	756	737	33.8	0.7	-0.7	-7.3	3.9	12.5
12	WS_45 DEG	756	738	-33.1	0.4	0.1	7.3	2	-10.7
13	WS_45 DEG	759	739	-23.6	0.3	-1.8	-2.4	6	19.1
14	WS_45 DEG	759	740	23.8	0.2	1.4	2.4	5.3	-18.8
15	WS_45 DEG	762	741	37.9	0.9	-0.8	-9.1	4.6	15
16	WS_45 DEG	762	742	-37.2	0.2	0.2	9.1	2.7	-10.3
17	WS_45 DEG	765	743	-24.4	0.8	-1.7	-4.8	6.6	24.2
18	WS_45 DEG	765	744	24.6	-0.3	1.3	4.8	3.2	-20.6
19	WS_45 DEG	768	745	45.3	1.4	-0.8	-11.9	6	22.6
20	WS_45 DEG	768	746	-44.4	-0.2	0.1	11.9	0.9	-9.9
21	WS_45 DEG	771	747	1.5	-5.3	4.5	5.9	-39.4	-76
22	WS_45 DEG	771	748	-1.5	4.3	-3.7	-5.9	-13.8	13.8

Load (Row) Number	User's Load ID	Member ID	Joint ID	Fx (kips)	Fy (kips)	Fz (kips)	Mx (ft*kip)	My (ft*kip)	Mz (ft*kip)
1	WS_-45 DEG	741	727	22.1	-1.3	0.4	9.3	-12.2	-13.4
2	WS_-45 DEG	741	728	-20.8	-0.4	-1.2	-9.3	-6.9	2.8
3	WS_-45 DEG	744	729	-15.8	0.2	0.9	-7	-5.4	13.8
4	WS_-45 DEG	744	730	15.2	0.9	-0.1	7	-1.7	-18.2
5	WS_-45 DEG	747	731	18.4	0.7	1.5	1.7	-6.6	19.5
6	WS_-45 DEG	747	732	-18.4	0	-1	-1.7	-4	-16.7
7	WS_-45 DEG	750	733	-30.7	0.5	0.6	-6.5	-2.7	11.8
8	WS_-45 DEG	750	734	30.1	0.6	0.1	6.5	-0.9	-12.5
9	WS_-45 DEG	753	735	18.2	0.3	1.4	-0.5	-4.6	17.4
10	WS_-45 DEG	753	736	-18.3	0.3	-0.9	0.5	-4.4	-17.1
11	WS_-45 DEG	756	737	-33.8	0.7	0.7	-7.3	-3.9	12.5
12	WS_-45 DEG	756	738	33.1	0.4	-0.1	7.3	-2	-10.7
13	WS_-45 DEG	759	739	23.6	0.3	1.8	-2.4	-6	19.1
14	WS_-45 DEG	759	740	-23.8	0.2	-1.4	2.4	-5.3	-18.7
15	WS_-45 DEG	762	741	-37.9	0.9	0.8	-9.1	-4.6	15
16	WS_-45 DEG	762	742	37.2	0.2	-0.2	9.1	-2.7	-10.3
17	WS_-45 DEG	765	743	24.4	0.8	1.7	-4.8	-6.6	24.2
18	WS_-45 DEG	765	744	-24.6	-0.3	-1.3	4.8	-3.2	-20.6
19	WS_-45 DEG	768	745	-45.2	1.4	0.8	-11.9	-6	22.6
20	WS_-45 DEG	768	746	44.4	-0.2	-0.1	11.9	-0.9	-9.9
21	WS_-45 DEG	771	747	-1.5	-5.3	-4.5	5.9	39.4	-76
22	WS_-45 DEG	771	748	1.5	4.3	3.7	-5.9	13.7	13.8
1	WS_60 DEG	741	727	-26.7	-0.7	-0.5	6.5	14.7	-8.8
2	WS_60 DEG	741	728	25.2	-0.1	1.5	-6.5	8.3	1.7
3	WS_60 DEG	744	729	19.1	0.1	-1	-5	6.5	9.7
4	WS_60 DEG	744	730	-18.4	0.5	0.1	5	2	-12.4
5	WS_60 DEG	747	731	-22.2	0.4	-1.8	1.1	8	13.9
6	WS_60 DEG	747	732	22.3	-0.1	1.2	-1.1	4.8	-12
7	WS_60 DEG	750	733	37.3	0.2	-0.7	-4.7	3.3	8.2
8	WS_60 DEG	750	734	-36.5	0.3	-0.1	4.7	1.1	-8.6
9	WS_60 DEG	753	735	-22	0.2	-1.7	-0.5	5.6	12.3
10	WS_60 DEG	753	736	22.2	0.1	1.1	0.5	5.4	-12.3
11	WS_60 DEG	756	737	41	0.3	-0.9	-5.1	4.7	8.5
12	WS_60 DEG	756	738	-40.2	0.2	0.1	5.1	2.4	-7.5
13	WS_60 DEG	759	739	-28.7	0.1	-2.2	-1.8	7.3	13.2
14	WS_60 DEG	759	740	28.8	0.1	1.7	1.8	6.5	-13.3
15	WS_60 DEG	762	741	46	0.5	-1	-6.2	5.6	10
16	WS_60 DEG	762	742	-45.1	0.1	0.2	6.2	3.3	-7.2
17	WS_60 DEG	765	743	-29.6	0.4	-2.1	-3.3	8	16.3
18	WS_60 DEG	765	744	29.8	-0.2	1.6	3.3	3.9	-14.4
19	WS_60 DEG	768	745	55	0.8	-0.9	-8	7.3	14.4
20	WS_60 DEG	768	746	-53.9	-0.1	0.1	8	1.1	-7
21	WS_60 DEG	771	747	1.8	-3.3	5.5	3.9	-47.9	-49.3
22	WS_60 DEG	771	748	-1.8	2.8	-4.5	-3.9	-16.7	9.7
1	WS_-60 DEG	741	727	26.7	-0.7	0.5	6.5	-14.7	-8.8
2	WS_-60 DEG	741	728	-25.2	-0.1	-1.5	-6.5	-8.3	1.7
3	WS_-60 DEG	744	729	-19.1	0.1	1	-5	-6.5	9.6
4	WS_-60 DEG	744	730	18.4	0.5	-0.1	5	-2	-12.4
5	WS_-60 DEG	747	731	22.2	0.4	1.8	1.1	-7.9	13.9
6	WS_-60 DEG	747	732	-22.2	-0.1	-1.2	-1.1	-4.8	-11.9
7	WS_-60 DEG	750	733	-37.2	0.2	0.7	-4.7	-3.3	8.2
8	WS_-60 DEG	750	734	36.4	0.3	0.1	4.7	-1.1	-8.6
9	WS_-60 DEG	753	735	22	0.2	1.7	-0.5	-5.6	12.3
10	WS_-60 DEG	753	736	-22.1	0.1	-1.1	0.5	-5.4	-12.3
11	WS_-60 DEG	756	737	-41	0.3	0.9	-5.1	-4.7	8.4
12	WS_-60 DEG	756	738	40.1	0.2	-0.1	5.1	-2.4	-7.5
13	WS_-60 DEG	759	739	28.6	0.1	2.2	-1.8	-7.3	13.2
14	WS_-60 DEG	759	740	-28.8	0.1	-1.7	1.8	-6.5	-13.3
15	WS_-60 DEG	762	741	-46	0.5	1	-6.2	-5.5	10
16	WS_-60 DEG	762	742	45.1	0.1	-0.2	6.2	-3.3	-7.2
17	WS_-60 DEG	765	743	29.6	0.4	2.1	-3.3	-8	16.2
18	WS_-60 DEG	765	744	-29.8	-0.2	-1.6	3.3	-3.9	-14.4
19	WS_-60 DEG	768	745	-54.9	0.8	0.9	-8	-7.3	14.4
20	WS_-60 DEG	768	746	53.8	-0.1	-0.1	8	-1.1	-7
21	WS_-60 DEG	771	747	-1.8	-3.3	-5.5	3.9	47.8	-49.3
22	WS_-60 DEG	771	748	1.8	2.8	4.5	-3.9	16.7	9.7

Load (Row) Number	User's Load ID	Member ID	Joint ID	Fx (kips)	Fy (kips)	Fz (kips)	Mx (ft*kip)	My (ft*kip)	Mz (ft*kip)
1	WS+WUP	741	727	-15.7	-1.8	0.1	14.6	-1.6	-18.4
2	WS+WUP	741	728	15.7	-0.9	-0.1	-14.6	-0.2	7.7
3	WS+WUP	744	729	23.1	-1.9	0.3	-7.6	-2.3	0.7
4	WS+WUP	744	730	-23.1	3.7	-0.3	7.6	-2.3	-41.5
5	WS+WUP	747	731	1.4	-2.6	-0.3	2	-0.5	3.5
6	WS+WUP	747	732	-1.4	3.7	0.3	-2	2.6	-30.3
7	WS+WUP	750	733	18.1	-0.5	-0.3	-6.3	2.3	3.7
8	WS+WUP	750	734	-18.1	2.2	0.3	6.3	2.1	-22.4
9	WS+WUP	753	735	-6.5	-2.5	-0.9	-0.3	3.6	5.5
10	WS+WUP	753	736	6.5	3.4	0.9	0.3	2.9	-28
11	WS+WUP	756	737	23.1	0.3	-0.2	-8.3	1.9	9.6
12	WS+WUP	756	738	-23.1	1.4	0.2	8.3	1.4	-17.4
13	WS+WUP	759	739	-6	-1.8	-0.9	-3.3	3.5	15
14	WS+WUP	759	740	6	2.6	0.9	3.3	3.1	-30.4
15	WS+WUP	762	741	20.5	1.1	-0.2	-13.1	1.5	18.9
16	WS+WUP	762	742	-20.5	0.7	0.2	13.1	1.7	-16.1
17	WS+WUP	765	743	-9.9	-0.1	-0.9	-8.1	2.7	31.6
18	WS+WUP	765	744	9.9	0.9	0.9	8.1	3.3	-35.1
19	WS+WUP	768	745	18.2	2.4	-0.5	-20.7	4.8	37.7
20	WS+WUP	768	746	-18.2	-0.4	0.5	20.7	2.8	-15.2
21	WS+WUP	771	747	-2.6	-8.9	1.9	7.2	-26.6	-135.6
22	WS+WUP	771	748	2.6	7.4	-1.9	-7.2	1.4	29.9

Selected Limit States

SRV 1 - SERVICE I
SRV 3 - SERVICE III

Max/ Min ID	Load Num	Member Num	Joint Num	Limit State/ Combo ID	Fx (kips)	Fy (kips)	Fz (kips)	Mx (ft*kip)	My (ft*kip)	Mz (ft*kip)	Mxy (ft*kip)	Mxz (ft*kip)	Myz (ft*kip)
Max Fx	1	741	727	SRV 1/ 484	1341.3	-0.2	5.0	1.4	5.1	-2.0	5.3	2.4	5.5
Max Fy	6	747	732	SRV 1/ 2	-252.0	5.9	-21.1	-1.0	-105.8	0.1	105.8	1.0	105.8
Max Fz	21	771	747	SRV 1/ 205	75.1	-0.7	99.8	1.1	-644.3	-11.2	644.3	11.2	644.4
Max Mx	7	750	733	SRV 1/ 38	-423.6	-2.0	9.4	9.8	-38.1	-26.6	39.4	28.3	46.5
Max My	21	771	747	SRV 1/ 400	45.1	-0.7	12.3	1.1	220.9	-10.7	220.9	10.7	221.2
Max Mz	21	771	747	SRV 3/ 5	47.8	2.2	21.4	1.1	132.5	26.5	132.5	26.5	135.1
Max Mxy	22	771	748	SRV 1/ 205	-64.9	0.6	-99.5	-1.1	-648.5	2.3	648.5	2.5	648.5
Max Mxz	21	771	747	SRV 1/ 8	68.5	-6.2	80.7	0.5	-462.5	-76.4	462.5	76.4	468.8
Max Myz	22	771	748	SRV 1/ 205	-64.9	0.6	-99.5	-1.1	-648.5	2.3	648.5	2.5	648.5
Min Fx	2	741	728	SRV 1/ 484	-1334.5	0.0	4.9	-1.4	-6.5	0.2	6.6	1.4	6.5
Min Fy	21	771	747	SRV 1/ 8	68.5	-6.2	80.7	0.5	-462.5	-76.4	462.5	76.4	468.8
Min Fz	22	771	748	SRV 1/ 205	-64.9	0.6	-99.5	-1.1	-648.5	2.3	648.5	2.5	648.5
Min Mx	8	750	734	SRV 1/ 38	429.1	2.1	-4.4	-9.8	-58.8	-2.1	59.6	10.0	58.8
Min My	22	771	748	SRV 1/ 205	-64.9	0.6	-99.5	-1.1	-648.5	2.3	648.5	2.5	648.5
Min Mz	21	771	747	SRV 1/ 8	68.5	-6.2	80.7	0.5	-462.5	-76.4	462.5	76.4	468.8
Min Mxy	16	762	742	SRV 1/ 167	-208.8	0.6	6.9	0.0	0.0	-5.3	0.0	5.3	5.3
Min Mxz	1	741	727	SRV 3/ 1	658.6	0.0	1.8	0.0	42.1	0.0	42.1	0.0	42.1
Min Myz	11	756	737	SRV 3/ 27	-167.8	0.0	4.7	0.0	0.1	0.0	0.1	0.0	0.1

Selected Limit States
SRV 1 - SERVICE I
SRV 3 - SERVICE III

			Combinded Results								
	Max/ Min ID	**Combo ID**	**Fx (kips)**	**Fy (kips)**	**Fz (kips)**	**Mx (ft*kip)**	**My (ft*kip)**	**Mz (ft*kip)**	**Mxy (ft*kip)**	**Mxz (ft*kip)**	**Myz (ft*kip)**
	Max Fx	SRV 1/ 484	1341.3	-0.2	5.0	1.4	5.1	-2.0	5.3	2.4	5.5
	Max Fy	SRV 3/ 1	658.6	0.0	1.8	0.0	42.1	0.0	42.1	0.0	42.1
	Max Fz	SRV 1/ 480	1266.6	-0.2	5.6	1.4	-2.9	-2.0	3.2	2.4	3.5
	Max Mx	SRV 1/ 1	1108.2	-0.5	3.9	2.6	21.6	-4.5	21.8	5.1	22.1
	Max My	SRV 1/ 118	614.6	-0.2	1.2	1.4	52.3	-2.0	52.3	2.4	52.3
Load No.	Max Mz	SRV 3/ 5	611.4	0.0	2.3	-0.4	35.4	2.1	35.4	2.1	35.5
1	Max Mxy	SRV 1/ 118	614.6	-0.2	1.2	1.4	52.3	-2.0	52.3	2.4	52.3
	Max Mxz	SRV 1/ 8	1113.0	-0.6	4.4	1.3	16.1	-6.5	16.1	6.6	17.4
Member	Max Myz	SRV 1/ 118	614.6	-0.2	1.2	1.4	52.3	-2.0	52.3	2.4	52.3
741	Min Fx	SRV 1/ 121	532.7	-0.2	1.7	1.4	44.9	-2.0	44.9	2.4	44.9
	Min Fy	SRV 1/ 2	1090.1	-0.6	4.3	0.9	17.0	-3.9	17.0	4.0	17.4
Joint	Min Fz	SRV 1/ 118	614.6	-0.2	1.2	1.4	52.3	-2.0	52.3	2.4	52.3
727	Min Mx	SRV 3/ 2	644.1	-0.1	2.2	-1.4	38.4	0.5	38.4	1.4	38.4
	Min My	SRV 1/ 486	1272.7	-0.2	5.6	1.4	-3.3	-2.0	3.5	2.4	3.8
	Min Mz	SRV 1/ 8	1113.0	-0.6	4.4	1.3	16.1	-6.5	16.1	6.6	17.4
	Min Mxy	SRV 1/ 485	1300.3	-0.3	5.3	0.1	1.3	-4.0	1.3	4.0	4.2
	Min Mxz	SRV 3/ 1	658.6	0.0	1.8	0.0	42.1	0.0	42.1	0.0	42.1
	Min Myz	SRV 1/ 473	1234.8	-0.3	5.3	1.3	-0.5	-0.4	1.4	1.4	0.6
	Max Fx	SRV 1/ 121	-526.7	0.0	8.6	-1.4	33.5	0.2	33.5	1.4	33.5
	Max Fy	SRV 3/ 2	-637.7	0.1	7.9	1.4	27.4	-2.2	27.5	2.6	27.5
	Max Fz	SRV 1/ 118	-608.6	0.0	9.1	-1.4	36.6	0.2	36.6	1.4	36.6
	Max Mx	SRV 3/ 2	-637.7	0.1	7.9	1.4	27.4	-2.2	27.5	2.6	27.5
	Max My	SRV 1/ 118	-608.6	0.0	9.1	-1.4	36.6	0.2	36.6	1.4	36.6
Load No.	Max Mz	SRV 1/ 1	-1101.8	-0.2	6.2	-2.6	5.8	0.4	6.3	2.6	5.8
2	Max Mxy	SRV 1/ 118	-608.6	0.0	9.1	-1.4	36.6	0.2	36.6	1.4	36.6
	Max Mxz	SRV 1/ 5	-1042.8	-0.2	5.6	-2.1	1.0	-1.6	2.3	2.6	1.9
Member	Max Myz	SRV 1/ 118	-608.6	0.0	9.1	-1.4	36.6	0.2	36.6	1.4	36.6
741	Min Fx	SRV 1/ 484	-1334.5	0.0	4.9	-1.4	-6.5	0.2	6.6	1.4	6.5
	Min Fy	SRV 1/ 1	-1101.8	-0.2	6.2	-2.6	5.8	0.4	6.3	2.6	5.8
Joint	Min Fz	SRV 1/ 480	-1259.8	0.0	4.3	-1.4	-10.9	0.2	11.0	1.4	10.9
728	Min Mx	SRV 1/ 1	-1101.8	-0.2	6.2	-2.6	5.8	0.4	6.3	2.6	5.8
	Min My	SRV 1/ 486	-1265.9	0.0	4.3	-1.4	-11.4	0.2	11.5	1.4	11.4
	Min Mz	SRV 1/ 29	-1075.5	0.0	6.2	-0.1	5.1	-2.5	5.1	2.5	5.6
	Min Mxy	SRV 1/ 65	-1091.9	0.0	5.4	-0.1	0.1	-2.5	0.2	2.5	2.5
	Min Mxz	SRV 3/ 1	-652.2	0.0	8.3	0.0	30.0	0.0	30.0	0.0	30.0
	Min Myz	SRV 1/ 276	-1092.4	-0.1	5.7	-1.8	0.0	0.2	1.8	1.8	0.2

	Combinded Results											
	Max/ Min ID	**Combo ID**	**Fx (kips)**	**Fy (kips)**	**Fz (kips)**	**Mx (ft*kip)**	**My (ft*kip)**	**Mz (ft*kip)**	**Mxy (ft*kip)**	**Mxz (ft*kip)**	**Myz (ft*kip)**
	Max Fx	SRV 1/ 366	-487.7	-0.1	0.9	-0.9	18.5	1.5	18.5	1.7	18.6
	Max Fy	SRV 3/ 1	-558.7	0.0	0.4	0.0	24.9	0.0	24.9	0.0	24.9
	Max Fz	SRV 1/ 239	-738.8	-0.7	6.3	0.2	-20.9	-0.4	20.9	0.5	20.9
	Max Mx	SRV 1/ 38	-690.6	-3.5	3.6	8.8	0.1	-35.4	8.8	36.5	35.4
	Max My	SRV 1/ 367	-564.8	-0.1	0.0	-0.9	29.9	1.5	29.9	1.7	29.9
Load No.	Max Mz	SRV 1/ 1	-737.5	-0.1	3.4	-1.3	3.3	2.2	3.5	2.5	4.0
3	Max Mxy	SRV 1/ 367	-564.8	-0.1	0.0	-0.9	29.9	1.5	29.9	1.7	29.9
	Max Mxz	SRV 1/ 38	-690.6	-3.5	3.6	8.8	0.1	-35.4	8.8	36.5	35.4
Member	Max Myz	SRV 1/ 362	-528.2	-3.5	0.4	8.8	23.9	-35.4	25.5	36.5	42.7
744	Min Fx	SRV 1/ 235	-818.5	-0.1	5.3	-0.9	-9.7	1.5	9.7	1.7	9.8
	Min Fy	SRV 1/ 11	-695.0	-3.6	3.8	8.5	-1.6	-34.9	8.6	35.9	34.9
Joint	Min Fz	SRV 1/ 118	-592.6	-0.1	-0.1	-0.9	28.6	1.5	28.6	1.7	28.6
729	Min Mx	SRV 1/ 1	-737.5	-0.1	3.4	-1.3	3.3	2.2	3.5	2.5	4.0
	Min My	SRV 1/ 238	-740.9	-0.1	6.2	-0.9	-21.1	1.5	21.1	1.7	21.2
	Min Mz	SRV 1/ 38	-690.6	-3.5	3.6	8.8	0.1	-35.4	8.8	36.5	35.4
	Min Mxy	SRV 3/ 37	-721.1	0.0	3.6	0.0	1.1	0.0	1.1	0.0	1.1
	Min Mxz	SRV 3/ 1	-558.7	0.0	0.4	0.0	24.9	0.0	24.9	0.0	24.9
	Min Myz	SRV 3/ 37	-721.1	0.0	3.6	0.0	1.1	0.0	1.1	0.0	1.1
	Max Fx	SRV 1/ 235	824.4	0.2	-0.3	0.9	-31.7	-3.2	31.7	3.3	31.8
	Max Fy	SRV 1/ 2	702.5	3.9	0.9	-8.4	-19.3	-18.9	21.1	20.7	27.0
	Max Fz	SRV 1/ 118	598.7	0.2	4.7	0.9	6.2	-3.2	6.2	3.3	7.0
	Max Mx	SRV 1/ 1	743.5	0.5	1.4	1.3	-17.3	-7.0	17.3	7.1	18.7
	Max My	SRV 1/ 118	598.7	0.2	4.7	0.9	6.2	-3.2	6.2	3.3	7.0
Load No.	Max Mz	SRV 3/ 1	564.7	0.0	4.4	0.0	3.6	0.0	3.6	0.0	3.6
4	Max Mxy	SRV 1/ 485	757.9	2.9	-0.8	-7.7	-35.5	-8.1	36.3	11.2	36.4
	Max Mxz	SRV 1/ 2	702.5	3.9	0.9	-8.4	-19.3	-18.9	21.1	20.7	27.0
Member	Max Myz	SRV 1/ 452	755.7	3.9	-0.7	-8.5	-33.9	-18.5	35.0	20.4	38.6
744	Min Fx	SRV 1/ 366	493.8	0.2	3.7	0.9	1.7	-3.2	1.9	3.3	3.6
	Min Fy	SRV 3/ 1	564.7	0.0	4.4	0.0	3.6	0.0	3.6	0.0	3.6
Joint	Min Fz	SRV 1/ 239	744.7	0.8	-1.3	-0.2	-34.6	-10.2	34.6	10.2	36.0
730	Min Mx	SRV 1/ 38	696.7	3.6	1.0	-8.8	-18.4	-15.1	20.4	17.5	23.8
	Min My	SRV 1/ 483	719.5	0.2	-1.3	0.9	-36.2	-3.2	36.2	3.3	36.3
	Min Mz	SRV 1/ 2	702.5	3.9	0.9	-8.4	-19.3	-18.9	21.1	20.7	27.0
	Min Mxy	SRV 1/ 401	507.2	0.8	3.5	-0.2	0.6	-10.2	0.7	10.2	10.2
	Min Mxz	SRV 3/ 1	564.7	0.0	4.4	0.0	3.6	0.0	3.6	0.0	3.6
	Min Myz	SRV 3/ 6	499.5	0.0	3.6	0.0	0.7	0.0	0.7	0.0	0.7

	Combinded Results											
	Max/ Min ID	Combo ID	Fx (kips)	Fy (kips)	Fz (kips)	Mx (ft*kip)	My (ft*kip)	Mz (ft*kip)	Mxy (ft*kip)	Mxz (ft*kip)	Myz (ft*kip)
	Max Fx	SRV 1/ 243	337.7	0.0	25.2	0.4	-96.9	2.0	96.9	2.0	96.9
	Max Fy	SRV 3/ 1	110.2	0.0	13.7	0.0	-36.8	0.0	36.8	0.0	36.8
	Max Fz	SRV 1/ 238	335.4	0.0	25.3	0.4	-96.9	2.0	96.9	2.0	96.9
	Max Mx	SRV 1/ 5	266.3	-0.8	21.6	2.7	-79.3	-2.7	79.3	3.8	79.3
	Max My	SRV 1/ 367	98.0	0.0	12.6	0.4	-31.5	2.0	31.5	2.0	31.6
Load No.	Max Mz	SRV 1/ 1	247.0	-0.1	21.2	0.9	-71.8	2.4	71.8	2.6	71.8
5	Max Mxy	SRV 1/ 237	337.5	0.0	25.2	0.4	-97.0	2.0	97.0	2.0	97.0
	Max Mxz	SRV 1/ 20	252.2	-5.7	21.0	0.9	-73.7	-50.1	73.7	50.1	89.1
Member	Max Myz	SRV 1/ 236	325.1	-5.5	24.8	0.5	-92.3	-50.0	92.3	50.0	104.9
747	Min Fx	SRV 1/ 367	98.0	0.0	12.6	0.4	-31.5	2.0	31.5	2.0	31.6
	Min Fy	SRV 1/ 11	254.6	-5.7	21.2	1.0	-74.6	-49.7	74.6	49.7	89.6
Joint	Min Fz	SRV 1/ 367	98.0	0.0	12.6	0.4	-31.5	2.0	31.5	2.0	31.6
731	Min Mx	SRV 3/ 8	117.4	-3.8	13.7	-1.4	-39.2	-37.4	39.2	37.5	54.2
	Min My	SRV 1/ 237	337.5	0.0	25.2	0.4	-97.0	2.0	97.0	2.0	97.0
	Min Mz	SRV 1/ 20	252.2	-5.7	21.0	0.9	-73.7	-50.1	73.7	50.1	89.1
	Min Mxy	SRV 1/ 367	98.0	0.0	12.6	0.4	-31.5	2.0	31.5	2.0	31.6
	Min Mxz	SRV 3/ 1	110.2	0.0	13.7	0.0	-36.8	0.0	36.8	0.0	36.8
	Min Myz	SRV 1/ 367	98.0	0.0	12.6	0.4	-31.5	2.0	31.5	2.0	31.6
	Max Fx	SRV 1/ 367	-93.5	0.1	-12.6	-0.4	-76.3	-2.6	76.3	2.6	76.3
	Max Fy	SRV 1/ 2	-252.0	5.9	-21.1	-1.0	-105.8	0.1	105.8	1.0	105.8
	Max Fz	SRV 1/ 367	-93.5	0.1	-12.6	-0.4	-76.3	-2.6	76.3	2.6	76.3
	Max Mx	SRV 3/ 8	-112.9	3.8	-13.5	1.4	-76.6	4.6	76.6	4.8	76.7
	Max My	SRV 1/ 366	-113.2	0.1	-13.3	-0.4	-74.3	-2.6	74.3	2.6	74.3
Load No.	Max Mz	SRV 3/ 8	-112.9	3.8	-13.5	1.4	-76.6	4.6	76.6	4.8	76.7
6	Max Mxy	SRV 1/ 235	-311.1	0.1	-24.4	-0.4	-120.8	-2.6	120.8	2.6	120.8
	Max Mxz	SRV 1/ 5	-261.8	1.1	-21.4	-2.7	-104.6	-5.7	104.6	6.3	104.8
Member	Max Myz	SRV 1/ 235	-311.1	0.1	-24.4	-0.4	-120.8	-2.6	120.8	2.6	120.8
747	Min Fx	SRV 1/ 243	-333.2	0.1	-24.9	-0.4	-117.0	-2.6	117.0	2.6	117.0
	Min Fy	SRV 3/ 1	-105.7	0.0	-13.5	0.0	-79.6	0.0	79.6	0.0	79.6
Joint	Min Fz	SRV 1/ 238	-330.9	0.1	-25.0	-0.4	-118.5	-2.6	118.5	2.6	118.5
732	Min Mx	SRV 1/ 5	-261.8	1.1	-21.4	-2.7	-104.6	-5.7	104.6	6.3	104.8
	Min My	SRV 1/ 235	-311.1	0.1	-24.4	-0.4	-120.8	-2.6	120.8	2.6	120.8
	Min Mz	SRV 1/ 5	-261.8	1.1	-21.4	-2.7	-104.6	-5.7	104.6	6.3	104.8
	Min Mxy	SRV 1/ 366	-113.2	0.1	-13.3	-0.4	-74.3	-2.6	74.3	2.6	74.3
	Min Mxz	SRV 3/ 1	-105.7	0.0	-13.5	0.0	-79.6	0.0	79.6	0.0	79.6
	Min Myz	SRV 1/ 366	-113.2	0.1	-13.3	-0.4	-74.3	-2.6	74.3	2.6	74.3

	Combinded Results											
	Max/ Min ID	**Combo ID**	**Fx (kips)**	**Fy (kips)**	**Fz (kips)**	**Mx (ft*kip)**	**My (ft*kip)**	**Mz (ft*kip)**	**Mxy (ft*kip)**	**Mxz (ft*kip)**	**Myz (ft*kip)**
	Max Fx	SRV 1/ 368	-283.4	-1.5	7.6	8.5	-27.7	-24.2	29.0	25.6	36.8
	Max Fy	SRV 1/ 1	-457.6	0.1	10.0	-1.1	-42.3	2.2	42.3	2.5	42.4
	Max Fz	SRV 1/ 235	-522.2	0.0	10.9	-0.8	-47.2	1.3	47.2	1.5	47.2
	Max Mx	SRV 1/ 38	-423.6	-2.0	9.4	9.8	-38.1	-26.6	39.4	28.3	46.5
	Max My	SRV 1/ 369	-283.8	0.0	7.5	-0.8	-27.4	1.3	27.5	1.5	27.5
Load No.	Max Mz	SRV 1/ 1	-457.6	0.1	10.0	-1.1	-42.3	2.2	42.3	2.5	42.4
7	Max Mxy	SRV 1/ 235	-522.2	0.0	10.9	-0.8	-47.2	1.3	47.2	1.5	47.2
	Max Mxz	SRV 1/ 38	-423.6	-2.0	9.4	9.8	-38.1	-26.6	39.4	28.3	46.5
Member	Max Myz	SRV 1/ 236	-499.8	-2.0	10.5	9.8	-44.0	-26.6	45.0	28.3	51.4
750	Min Fx	SRV 1/ 235	-522.2	0.0	10.9	-0.8	-47.2	1.3	47.2	1.5	47.2
	Min Fy	SRV 1/ 29	-425.6	-2.0	9.5	9.7	-38.3	-26.3	39.5	28.1	46.5
Joint	Min Fz	SRV 1/ 363	-288.4	0.0	7.5	-0.8	-28.0	1.3	28.1	1.5	28.1
733	Min Mx	SRV 1/ 1	-457.6	0.1	10.0	-1.1	-42.3	2.2	42.3	2.5	42.4
	Min My	SRV 1/ 235	-522.2	0.0	10.9	-0.8	-47.2	1.3	47.2	1.5	47.2
	Min Mz	SRV 1/ 38	-423.6	-2.0	9.4	9.8	-38.1	-26.6	39.4	28.3	46.5
	Min Mxy	SRV 1/ 369	-283.8	0.0	7.5	-0.8	-27.4	1.3	27.5	1.5	27.5
	Min Mxz	SRV 3/ 1	-328.3	0.0	8.2	0.0	-33.3	0.0	33.3	0.0	33.3
	Min Myz	SRV 1/ 369	-283.8	0.0	7.5	-0.8	-27.4	1.3	27.5	1.5	27.5
	Max Fx	SRV 1/ 235	527.3	0.1	-5.5	0.8	-68.3	-2.1	68.3	2.3	68.4
	Max Fy	SRV 1/ 2	440.5	2.4	-4.4	-9.5	-59.2	-4.4	60.0	10.4	59.4
	Max Fz	SRV 3/ 3	303.8	0.0	-2.5	0.0	-42.9	0.0	42.9	0.0	42.9
	Max Mx	SRV 1/ 1	462.9	0.4	-4.8	1.1	-61.9	-4.4	61.9	4.6	62.1
	Max My	SRV 1/ 366	290.8	0.1	-2.5	0.8	-42.0	-2.1	42.0	2.3	42.0
Load No.	Max Mz	SRV 3/ 8	299.8	1.2	-2.6	-7.4	-43.7	3.0	44.3	8.0	43.8
8	Max Mxy	SRV 1/ 235	527.3	0.1	-5.5	0.8	-68.3	-2.1	68.3	2.3	68.4
	Max Mxz	SRV 1/ 11	437.6	2.3	-4.4	-9.6	-59.1	-4.2	59.8	10.4	59.2
Member	Max Myz	SRV 1/ 235	527.3	0.1	-5.5	0.8	-68.3	-2.1	68.3	2.3	68.4
750	Min Fx	SRV 1/ 368	288.9	1.6	-2.6	-8.5	-43.7	1.7	44.5	8.7	43.7
	Min Fy	SRV 3/ 1	333.6	0.0	-3.0	0.0	-46.4	0.0	46.4	0.0	46.4
Joint	Min Fz	SRV 1/ 163	515.9	0.4	-5.5	1.1	-67.9	-4.4	67.9	4.6	68.0
734	Min Mx	SRV 1/ 38	429.1	2.1	-4.4	-9.8	-58.8	-2.1	59.6	10.0	58.8
	Min My	SRV 1/ 235	527.3	0.1	-5.5	0.8	-68.3	-2.1	68.3	2.3	68.4
	Min Mz	SRV 1/ 5	437.8	0.8	-4.2	-0.2	-57.4	-8.2	57.4	8.2	58.0
	Min Mxy	SRV 1/ 366	290.8	0.1	-2.5	0.8	-42.0	-2.1	42.0	2.3	42.0
	Min Mxz	SRV 3/ 1	333.6	0.0	-3.0	0.0	-46.4	0.0	46.4	0.0	46.4
	Min Myz	SRV 1/ 366	290.8	0.1	-2.5	0.8	-42.0	-2.1	42.0	2.3	42.0

	Combinded Results											
	Max/ Min ID	Combo ID	Fx (kips)	Fy (kips)	Fz (kips)	Mx (ft*kip)	My (ft*kip)	Mz (ft*kip)	Mxy (ft*kip)	Mxz (ft*kip)	Myz (ft*kip)
	Max Fx	SRV 1/ 238	270.3	-0.1	24.6	0.1	-100.1	1.7	100.1	1.7	100.1
	Max Fy	SRV 3/ 1	130.2	0.0	18.6	0.0	-76.3	0.0	76.3	0.0	76.3
	Max Fz	SRV 1/ 238	270.3	-0.1	24.6	0.1	-100.1	1.7	100.1	1.7	100.1
	Max Mx	SRV 1/ 2	203.2	-5.0	21.4	3.9	-87.5	-42.5	87.6	42.6	97.3
	Max My	SRV 1/ 368	108.1	-4.1	16.3	1.8	-67.3	-37.5	67.3	37.5	77.0
Load No.	Max Mz	SRV 1/ 1	206.0	-0.2	22.4	0.5	-92.2	2.3	92.2	2.3	92.2
9	Max Mxy	SRV 1/ 235	248.6	-0.1	24.4	0.1	-100.5	1.7	100.5	1.7	100.5
	Max Mxz	SRV 1/ 20	199.4	-5.0	21.1	3.9	-86.5	-43.0	86.6	43.2	96.6
Member	Max Myz	SRV 1/ 236	245.8	-4.9	23.4	3.5	-95.8	-43.0	95.9	43.1	105.0
753	Min Fx	SRV 1/ 367	97.3	-0.1	16.2	0.1	-67.5	1.7	67.5	1.7	67.5
	Min Fy	SRV 1/ 11	201.5	-5.0	21.3	3.9	-87.1	-42.7	87.1	42.9	97.0
Joint	Min Fz	SRV 1/ 367	97.3	-0.1	16.2	0.1	-67.5	1.7	67.5	1.7	67.5
735	Min Mx	SRV 3/ 1	130.2	0.0	18.6	0.0	-76.3	0.0	76.3	0.0	76.3
	Min My	SRV 1/ 235	248.6	-0.1	24.4	0.1	-100.5	1.7	100.5	1.7	100.5
	Min Mz	SRV 1/ 20	199.4	-5.0	21.1	3.9	-86.5	-43.0	86.6	43.2	96.6
	Min Mxy	SRV 1/ 368	108.1	-4.1	16.3	1.8	-67.3	-37.5	67.3	37.5	77.0
	Min Mxz	SRV 3/ 1	130.2	0.0	18.6	0.0	-76.3	0.0	76.3	0.0	76.3
	Min Myz	SRV 1/ 369	121.0	-0.1	16.5	0.1	-67.4	1.7	67.4	1.7	67.4
	Max Fx	SRV 1/ 367	-93.3	0.2	-15.5	-0.1	-53.9	-2.6	53.9	2.6	54.0
	Max Fy	SRV 1/ 2	-199.2	5.2	-20.6	-3.9	-72.1	3.6	72.2	5.3	72.2
	Max Fz	SRV 1/ 367	-93.3	0.2	-15.5	-0.1	-53.9	-2.6	53.9	2.6	54.0
	Max Mx	SRV 3/ 1	-126.2	0.0	-17.8	0.0	-62.9	0.0	62.9	0.0	62.9
	Max My	SRV 1/ 367	-93.3	0.2	-15.5	-0.1	-53.9	-2.6	53.9	2.6	54.0
Load No.	Max Mz	SRV 3/ 8	-113.0	3.2	-16.0	-1.4	-56.7	6.6	56.7	6.8	57.1
10	Max Mxy	SRV 1/ 238	-266.3	0.2	-23.7	-0.1	-84.5	-2.6	84.5	2.6	84.5
	Max Mxz	SRV 3/ 2	-123.9	3.8	-17.0	-2.7	-60.2	6.6	60.3	7.1	60.6
Member	Max Myz	SRV 1/ 238	-266.3	0.2	-23.7	-0.1	-84.5	-2.6	84.5	2.6	84.5
753	Min Fx	SRV 1/ 238	-266.3	0.2	-23.7	-0.1	-84.5	-2.6	84.5	2.6	84.5
	Min Fy	SRV 3/ 1	-126.2	0.0	-17.8	0.0	-62.9	0.0	62.9	0.0	62.9
Joint	Min Fz	SRV 1/ 238	-266.3	0.2	-23.7	-0.1	-84.5	-2.6	84.5	2.6	84.5
736	Min Mx	SRV 1/ 2	-199.2	5.2	-20.6	-3.9	-72.1	3.6	72.2	5.3	72.2
	Min My	SRV 1/ 238	-266.3	0.2	-23.7	-0.1	-84.5	-2.6	84.5	2.6	84.5
	Min Mz	SRV 1/ 5	-210.1	1.1	-20.7	-2.3	-73.1	-4.7	73.1	5.2	73.3
	Min Mxy	SRV 1/ 367	-93.3	0.2	-15.5	-0.1	-53.9	-2.6	53.9	2.6	54.0
	Min Mxz	SRV 3/ 1	-126.2	0.0	-17.8	0.0	-62.9	0.0	62.9	0.0	62.9
	Min Myz	SRV 1/ 367	-93.3	0.2	-15.5	-0.1	-53.9	-2.6	53.9	2.6	54.0

	Combinded Results											
	Max/ Min ID	**Combo ID**	**Fx (kips)**	**Fy (kips)**	**Fz (kips)**	**Mx (ft*kip)**	**My (ft*kip)**	**Mz (ft*kip)**	**Mxy (ft*kip)**	**Mxz (ft*kip)**	**Myz (ft*kip)**
	Max Fx	SRV 1/ 286	-139.6	0.1	3.9	-0.9	5.4	1.6	5.5	1.8	5.6
	Max Fy	SRV 1/ 1	-263.2	0.2	5.6	-1.5	-7.4	3.0	7.6	3.3	8.0
	Max Fz	SRV 1/ 157	-336.1	0.1	6.7	-0.9	-21.9	1.6	21.9	1.8	22.0
	Max Mx	SRV 1/ 38	-219.8	-1.1	5.1	8.2	-3.9	-17.9	9.1	19.7	18.4
	Max My	SRV 1/ 448	-143.2	0.1	4.0	-0.9	6.5	1.6	6.6	1.8	6.7
Load No.	Max Mz	SRV 1/ 1	-263.2	0.2	5.6	-1.5	-7.4	3.0	7.6	3.3	8.0
11	Max Mxy	SRV 1/ 157	-336.1	0.1	6.7	-0.9	-21.9	1.6	21.9	1.8	22.0
	Max Mxz	SRV 1/ 38	-219.8	-1.1	5.1	8.2	-3.9	-17.9	9.1	19.7	18.4
Member	Max Myz	SRV 1/ 155	-291.6	-1.1	5.9	8.2	-14.7	-17.9	16.8	19.7	23.2
756	Min Fx	SRV 1/ 157	-336.1	0.1	6.7	-0.9	-21.9	1.6	21.9	1.8	22.0
	Min Fy	SRV 1/ 38	-219.8	-1.1	5.1	8.2	-3.9	-17.9	9.1	19.7	18.4
Joint	Min Fz	SRV 1/ 286	-139.6	0.1	3.9	-0.9	5.4	1.6	5.5	1.8	5.6
737	Min Mx	SRV 1/ 1	-263.2	0.2	5.6	-1.5	-7.4	3.0	7.6	3.3	8.0
	Min My	SRV 1/ 157	-336.1	0.1	6.7	-0.9	-21.9	1.6	21.9	1.8	22.0
	Min Mz	SRV 1/ 38	-219.8	-1.1	5.1	8.2	-3.9	-17.9	9.1	19.7	18.4
	Min Mxy	SRV 3/ 27	-167.8	0.0	4.7	0.0	0.1	0.0	0.1	0.0	0.1
	Min Mxz	SRV 3/ 1	-262.7	0.0	5.4	0.0	-12.4	0.0	12.4	0.0	12.4
	Min Myz	SRV 3/ 27	-167.8	0.0	4.7	0.0	0.1	0.0	0.1	0.0	0.1
	Max Fx	SRV 1/ 157	341.0	0.1	-1.0	0.9	-34.0	-1.8	34.1	2.0	34.1
	Max Fy	SRV 1/ 2	236.9	1.5	0.3	-7.6	-31.3	-1.1	32.2	7.7	31.3
	Max Fz	SRV 1/ 277	147.0	0.2	1.6	1.1	-22.5	-2.6	22.5	2.8	22.7
	Max Mx	SRV 1/ 1	268.3	0.3	0.0	1.5	-32.6	-3.7	32.6	4.0	32.8
	Max My	SRV 1/ 367	192.7	0.1	1.2	0.9	-20.6	-1.8	20.6	2.0	20.6
Load No.	Max Mz	SRV 3/ 8	212.3	0.6	0.8	-5.9	-22.7	4.1	23.5	7.2	23.1
12	Max Mxy	SRV 1/ 238	296.8	0.1	-0.7	0.9	-39.2	-1.8	39.3	2.0	39.3
	Max Mxz	SRV 1/ 38	225.1	1.3	0.4	-8.2	-30.5	0.8	31.5	8.2	30.5
Member	Max Myz	SRV 1/ 238	296.8	0.1	-0.7	0.9	-39.2	-1.8	39.3	2.0	39.3
756	Min Fx	SRV 1/ 286	144.9	0.1	1.6	0.9	-22.4	-1.8	22.4	2.0	22.4
	Min Fy	SRV 3/ 1	267.8	0.0	0.2	0.0	-25.8	0.0	25.8	0.0	25.8
Joint	Min Fz	SRV 1/ 148	339.0	0.2	-1.0	1.1	-33.9	-2.6	33.9	2.8	34.0
738	Min Mx	SRV 1/ 38	225.1	1.3	0.4	-8.2	-30.5	0.8	31.5	8.2	30.5
	Min My	SRV 1/ 238	296.8	0.1	-0.7	0.9	-39.2	-1.8	39.3	2.0	39.3
	Min Mz	SRV 1/ 5	243.5	0.7	0.0	-0.2	-32.5	-6.2	32.5	6.2	33.1
	Min Mxy	SRV 1/ 367	192.7	0.1	1.2	0.9	-20.6	-1.8	20.6	2.0	20.6
	Min Mxz	SRV 3/ 1	267.8	0.0	0.2	0.0	-25.8	0.0	25.8	0.0	25.8
	Min Myz	SRV 1/ 367	192.7	0.1	1.2	0.9	-20.6	-1.8	20.6	2.0	20.6

	Combinded Results											
	Max/ Min ID	**Combo ID**	**Fx (kips)**	**Fy (kips)**	**Fz (kips)**	**Mx (ft*kip)**	**My (ft*kip)**	**Mz (ft*kip)**	**Mxy (ft*kip)**	**Mxz (ft*kip)**	**Myz (ft*kip)**
	Max Fx	SRV 1/ 157	96.7	-0.1	16.4	-0.2	-60.3	2.2	60.3	2.2	60.3
	Max Fy	SRV 3/ 1	18.7	0.0	12.8	0.0	-46.3	0.0	46.3	0.0	46.3
	Max Fz	SRV 1/ 157	96.7	-0.1	16.4	-0.2	-60.3	2.2	60.3	2.2	60.3
	Max Mx	SRV 1/ 20	1.1	-3.8	7.5	4.6	-31.1	-30.2	31.5	30.5	43.3
	Max My	SRV 1/ 448	-70.1	-0.1	2.7	-0.2	-13.1	2.2	13.1	2.2	13.3
Load No.	Max Mz	SRV 1/ 1	7.0	-0.1	9.0	0.0	-36.5	3.7	36.5	3.7	36.7
13	Max Mxy	SRV 1/ 157	96.7	-0.1	16.4	-0.2	-60.3	2.2	60.3	2.2	60.3
	Max Mxz	SRV 1/ 38	-2.5	-3.7	7.2	4.4	-30.2	-30.8	30.6	31.1	43.2
Member	Max Myz	SRV 1/ 157	96.7	-0.1	16.4	-0.2	-60.3	2.2	60.3	2.2	60.3
759	Min Fx	SRV 1/ 286	-72.8	-0.1	3.7	-0.2	-16.0	2.2	16.0	2.2	16.2
	Min Fy	SRV 1/ 11	3.7	-3.8	7.7	4.6	-31.8	-29.8	32.2	30.1	43.6
Joint	Min Fz	SRV 1/ 448	-70.1	-0.1	2.7	-0.2	-13.1	2.2	13.1	2.2	13.3
739	Min Mx	SRV 1/ 37	-1.4	-0.1	8.3	-0.2	-34.3	2.2	34.3	2.2	34.4
	Min My	SRV 1/ 157	96.7	-0.1	16.4	-0.2	-60.3	2.2	60.3	2.2	60.3
	Min Mz	SRV 1/ 38	-2.5	-3.7	7.2	4.4	-30.2	-30.8	30.6	31.1	43.2
	Min Mxy	SRV 1/ 448	-70.1	-0.1	2.7	-0.2	-13.1	2.2	13.1	2.2	13.3
	Min Mxz	SRV 3/ 1	18.7	0.0	12.8	0.0	-46.3	0.0	46.3	0.0	46.3
	Min Myz	SRV 1/ 448	-70.1	-0.1	2.7	-0.2	-13.1	2.2	13.1	2.2	13.3
	Max Fx	SRV 1/ 286	76.3	0.1	-2.7	0.2	-6.6	-2.9	6.6	2.9	7.2
	Max Fy	SRV 1/ 2	-2.4	3.9	-6.7	-4.5	-19.5	2.4	20.0	5.1	19.6
	Max Fz	SRV 1/ 448	73.6	0.1	-1.7	0.2	-1.8	-2.9	1.8	2.9	3.4
	Max Mx	SRV 1/ 37	4.9	0.1	-7.3	0.2	-21.3	-2.9	21.3	2.9	21.5
	Max My	SRV 1/ 205	53.7	0.1	-2.1	0.2	-1.8	-2.9	1.8	2.9	3.4
Load No.	Max Mz	SRV 3/ 2	-14.3	2.9	-10.7	-3.6	-35.9	6.1	36.1	7.1	36.5
14	Max Mxy	SRV 1/ 157	-93.2	0.1	-15.0	0.2	-49.5	-2.9	49.5	2.9	49.6
	Max Mxz	SRV 3/ 2	-14.3	2.9	-10.7	-3.6	-35.9	6.1	36.1	7.1	36.5
Member	Max Myz	SRV 1/ 157	-93.2	0.1	-15.0	0.2	-49.5	-2.9	49.5	2.9	49.6
759	Min Fx	SRV 1/ 157	-93.2	0.1	-15.0	0.2	-49.5	-2.9	49.5	2.9	49.6
	Min Fy	SRV 3/ 1	-15.2	0.0	-11.6	0.0	-38.9	0.0	38.9	0.0	38.9
Joint	Min Fz	SRV 1/ 157	-93.2	0.1	-15.0	0.2	-49.5	-2.9	49.5	2.9	49.6
740	Min Mx	SRV 1/ 20	2.5	3.9	-6.4	-4.6	-18.4	3.1	19.0	5.6	18.7
	Min My	SRV 1/ 157	-93.2	0.1	-15.0	0.2	-49.5	-2.9	49.5	2.9	49.6
	Min Mz	SRV 1/ 1	-3.5	0.3	-7.8	0.0	-23.2	-5.3	23.2	5.3	23.8
	Min Mxy	SRV 1/ 205	53.7	0.1	-2.1	0.2	-1.8	-2.9	1.8	2.9	3.4
	Min Mxz	SRV 3/ 1	-15.2	0.0	-11.6	0.0	-38.9	0.0	38.9	0.0	38.9
	Min Myz	SRV 1/ 205	53.7	0.1	-2.1	0.2	-1.8	-2.9	1.8	2.9	3.4

	Combinded Results											
	Max/ Min ID	**Combo ID**	**Fx (kips)**	**Fy (kips)**	**Fz (kips)**	**Mx (ft*kip)**	**My (ft*kip)**	**Mz (ft*kip)**	**Mxy (ft*kip)**	**Mxz (ft*kip)**	**Myz (ft*kip)**
	Max Fx	SRV 1/ 205	331.9	0.1	-3.4	-1.2	75.5	2.1	75.5	2.4	75.5
	Max Fy	SRV 1/ 1	145.1	0.3	-0.4	-2.4	49.3	4.5	49.4	5.1	49.5
	Max Fz	SRV 1/ 400	-159.7	0.1	4.7	-1.2	-1.7	2.1	2.1	2.4	2.7
	Max Mx	SRV 3/ 2	-62.8	-0.3	3.0	4.6	12.0	-8.0	12.8	9.2	14.4
	Max My	SRV 1/ 205	331.9	0.1	-3.4	-1.2	75.5	2.1	75.5	2.4	75.5
Load No.	Max Mz	SRV 1/ 1	145.1	0.3	-0.4	-2.4	49.3	4.5	49.4	5.1	49.5
15	Max Mxy	SRV 1/ 205	331.9	0.1	-3.4	-1.2	75.5	2.1	75.5	2.4	75.5
	Max Mxz	SRV 3/ 2	-62.8	-0.3	3.0	4.6	12.0	-8.0	12.8	9.2	14.4
Member	Max Myz	SRV 1/ 205	331.9	0.1	-3.4	-1.2	75.5	2.1	75.5	2.4	75.5
762	Min Fx	SRV 1/ 400	-159.7	0.1	4.7	-1.2	-1.7	2.1	2.1	2.4	2.7
	Min Fy	SRV 3/ 2	-62.8	-0.3	3.0	4.6	12.0	-8.0	12.8	9.2	14.4
Joint	Min Fz	SRV 1/ 205	331.9	0.1	-3.4	-1.2	75.5	2.1	75.5	2.4	75.5
741	Min Mx	SRV 1/ 1	145.1	0.3	-0.4	-2.4	49.3	4.5	49.4	5.1	49.5
	Min My	SRV 1/ 400	-159.7	0.1	4.7	-1.2	-1.7	2.1	2.1	2.4	2.7
	Min Mz	SRV 3/ 2	-62.8	-0.3	3.0	4.6	12.0	-8.0	12.8	9.2	14.4
	Min Mxy	SRV 1/ 364	-133.1	0.1	4.1	-1.2	1.5	2.1	2.0	2.4	2.6
	Min Mxz	SRV 3/ 1	-83.3	0.0	3.2	0.0	10.8	0.0	10.8	0.0	10.8
	Min Myz	SRV 3/ 4	-125.6	0.0	4.1	0.0	2.6	0.0	2.6	0.0	2.6
	Max Fx	SRV 1/ 400	164.4	0.0	1.2	1.2	-22.6	-1.7	22.7	2.1	22.7
	Max Fy	SRV 1/ 2	-165.9	0.6	6.4	-3.3	-0.9	0.1	3.4	3.3	0.9
	Max Fz	SRV 1/ 196	-324.5	0.1	8.9	1.6	10.6	-2.5	10.8	2.9	10.9
	Max Mx	SRV 1/ 1	-140.2	0.2	6.1	2.4	-2.9	-3.5	3.7	4.2	4.5
	Max My	SRV 1/ 205	-326.8	0.0	8.9	1.2	10.8	-1.7	10.9	2.1	11.0
Load No.	Max Mz	SRV 3/ 8	26.1	0.0	3.3	-2.7	-10.3	4.2	10.7	5.0	11.2
16	Max Mxy	SRV 1/ 400	164.4	0.0	1.2	1.2	-22.6	-1.7	22.7	2.1	22.7
	Max Mxz	SRV 3/ 2	67.7	0.3	2.7	-4.6	-14.0	2.8	14.7	5.4	14.3
Member	Max Myz	SRV 1/ 400	164.4	0.0	1.2	1.2	-22.6	-1.7	22.7	2.1	22.7
762	Min Fx	SRV 1/ 205	-326.8	0.0	8.9	1.2	10.8	-1.7	10.9	2.1	11.0
	Min Fy	SRV 3/ 1	88.2	0.0	2.5	0.0	-15.6	0.0	15.6	0.0	15.6
Joint	Min Fz	SRV 1/ 391	162.2	0.1	1.2	1.6	-22.4	-2.5	22.5	2.9	22.6
742	Min Mx	SRV 3/ 2	67.7	0.3	2.7	-4.6	-14.0	2.8	14.7	5.4	14.3
	Min My	SRV 1/ 400	164.4	0.0	1.2	1.2	-22.6	-1.7	22.7	2.1	22.7
	Min Mz	SRV 1/ 5	-139.4	0.6	5.8	0.0	-3.5	-5.3	3.5	5.3	6.3
	Min Mxy	SRV 1/ 167	-208.8	0.6	6.9	0.0	0.0	-5.3	0.0	5.3	5.3
	Min Mxz	SRV 3/ 1	88.2	0.0	2.5	0.0	-15.6	0.0	15.6	0.0	15.6
	Min Myz	SRV 3/ 42	-181.5	0.0	6.4	0.0	0.2	0.0	0.2	0.0	0.2

	Combinded Results											
	Max/ Min ID	**Combo ID**	**Fx (kips)**	**Fy (kips)**	**Fz (kips)**	**Mx (ft*kip)**	**My (ft*kip)**	**Mz (ft*kip)**	**Mxy (ft*kip)**	**Mxz (ft*kip)**	**Myz (ft*kip)**
	Max Fx	SRV 1/ 400	62.7	0.0	11.4	-0.5	-27.3	3.3	27.3	3.3	27.5
	Max Fy	SRV 1/ 1	-114.2	0.2	-8.8	-0.8	50.9	6.6	50.9	6.6	51.3
	Max Fz	SRV 1/ 400	62.7	0.0	11.4	-0.5	-27.3	3.3	27.3	3.3	27.5
	Max Mx	SRV 1/ 38	-130.1	-1.9	-10.3	2.6	56.1	-14.0	56.1	14.3	57.8
	Max My	SRV 1/ 205	-224.7	0.0	-19.4	-0.5	91.3	3.3	91.3	3.3	91.3
Load No.	Max Mz	SRV 1/ 1	-114.2	0.2	-8.8	-0.8	50.9	6.6	50.9	6.6	51.3
17	Max Mxy	SRV 1/ 205	-224.7	0.0	-19.4	-0.5	91.3	3.3	91.3	3.3	91.3
	Max Mxz	SRV 1/ 38	-130.1	-1.9	-10.3	2.6	56.1	-14.0	56.1	14.3	57.8
Member	Max Myz	SRV 1/ 205	-224.7	0.0	-19.4	-0.5	91.3	3.3	91.3	3.3	91.3
765	Min Fx	SRV 1/ 205	-224.7	0.0	-19.4	-0.5	91.3	3.3	91.3	3.3	91.3
	Min Fy	SRV 1/ 38	-130.1	-1.9	-10.3	2.6	56.1	-14.0	56.1	14.3	57.8
Joint	Min Fz	SRV 1/ 205	-224.7	0.0	-19.4	-0.5	91.3	3.3	91.3	3.3	91.3
743	Min Mx	SRV 1/ 1	-114.2	0.2	-8.8	-0.8	50.9	6.6	50.9	6.6	51.3
	Min My	SRV 1/ 400	62.7	0.0	11.4	-0.5	-27.3	3.3	27.3	3.3	27.5
	Min Mz	SRV 1/ 38	-130.1	-1.9	-10.3	2.6	56.1	-14.0	56.1	14.3	57.8
	Min Mxy	SRV 1/ 404	-31.9	-0.9	4.3	0.0	0.4	-5.4	0.4	5.4	5.4
	Min Mxz	SRV 3/ 1	-2.0	0.0	6.9	0.0	-9.0	0.1	9.0	0.1	9.0
	Min Myz	SRV 3/ 31	19.8	0.0	4.2	0.0	-0.4	0.1	0.4	0.1	0.5
	Max Fx	SRV 1/ 205	227.9	0.0	20.7	0.5	40.1	-3.2	40.1	3.3	40.2
	Max Fy	SRV 1/ 11	126.9	2.0	11.2	-2.4	15.0	-0.8	15.2	2.5	15.0
	Max Fz	SRV 1/ 205	227.9	0.0	20.7	0.5	40.1	-3.2	40.1	3.3	40.2
	Max Mx	SRV 1/ 1	117.3	0.1	10.2	0.8	11.8	-6.2	11.8	6.2	13.3
	Max My	SRV 1/ 205	227.9	0.0	20.7	0.5	40.1	-3.2	40.1	3.3	40.2
Load No.	Max Mz	SRV 3/ 2	11.0	1.5	-4.8	-2.5	-29.1	4.0	29.2	4.7	29.4
18	Max Mxy	SRV 1/ 400	-59.7	0.0	-9.9	0.5	-42.2	-3.2	42.2	3.3	42.3
	Max Mxz	SRV 1/ 1	117.3	0.1	10.2	0.8	11.8	-6.2	11.8	6.2	13.3
Member	Max Myz	SRV 1/ 400	-59.7	0.0	-9.9	0.5	-42.2	-3.2	42.2	3.3	42.3
765	Min Fx	SRV 1/ 400	-59.7	0.0	-9.9	0.5	-42.2	-3.2	42.2	3.3	42.3
	Min Fy	SRV 3/ 1	5.1	0.0	-5.5	0.0	-31.4	0.0	31.4	0.0	31.4
Joint	Min Fz	SRV 1/ 400	-59.7	0.0	-9.9	0.5	-42.2	-3.2	42.2	3.3	42.3
744	Min Mx	SRV 1/ 38	133.3	1.9	11.6	-2.6	16.0	1.8	16.2	3.1	16.1
	Min My	SRV 1/ 400	-59.7	0.0	-9.9	0.5	-42.2	-3.2	42.2	3.3	42.3
	Min Mz	SRV 1/ 1	117.3	0.1	10.2	0.8	11.8	-6.2	11.8	6.2	13.3
	Min Mxy	SRV 1/ 472	70.2	0.1	5.5	0.6	-0.1	-4.4	0.6	4.4	4.4
	Min Mxz	SRV 3/ 1	5.1	0.0	-5.5	0.0	-31.4	0.0	31.4	0.0	31.4
	Min Myz	SRV 1/ 263	108.8	2.0	5.9	-2.5	0.0	-0.2	2.5	2.5	0.2

	Combinded Results											
	Max/ Min ID	Combo ID	Fx (kips)	Fy (kips)	Fz (kips)	Mx (ft*kip)	My (ft*kip)	Mz (ft*kip)	Mxy (ft*kip)	Mxz (ft*kip)	Myz (ft*kip)
	Max Fx	SRV 1/ 205	1003.6	0.2	-3.0	-1.7	94.3	3.4	94.4	3.8	94.4
	Max Fy	SRV 1/ 8	770.7	1.5	-0.8	-6.7	66.3	19.1	66.6	20.2	69.0
	Max Fz	SRV 1/ 400	-43.3	0.2	7.8	-1.7	-38.1	3.4	38.1	3.8	38.2
	Max Mx	SRV 3/ 5	55.7	-0.5	6.6	2.7	-23.9	-6.0	24.1	6.6	24.6
	Max My	SRV 1/ 205	1003.6	0.2	-3.0	-1.7	94.3	3.4	94.4	3.8	94.4
Load No.	Max Mz	SRV 1/ 8	770.7	1.5	-0.8	-6.7	66.3	19.1	66.6	20.2	69.0
19	Max Mxy	SRV 1/ 205	1003.6	0.2	-3.0	-1.7	94.3	3.4	94.4	3.8	94.4
	Max Mxz	SRV 1/ 8	770.7	1.5	-0.8	-6.7	66.3	19.1	66.6	20.2	69.0
Member	Max Myz	SRV 1/ 205	1003.6	0.2	-3.0	-1.7	94.3	3.4	94.4	3.8	94.4
768	Min Fx	SRV 1/ 400	-43.3	0.2	7.8	-1.7	-38.1	3.4	38.1	3.8	38.2
	Min Fy	SRV 3/ 5	55.7	-0.5	6.6	2.7	-23.9	-6.0	24.1	6.6	24.6
Joint	Min Fz	SRV 1/ 205	1003.6	0.2	-3.0	-1.7	94.3	3.4	94.4	3.8	94.4
745	Min Mx	SRV 1/ 8	770.7	1.5	-0.8	-6.7	66.3	19.1	66.6	20.2	69.0
	Min My	SRV 1/ 400	-43.3	0.2	7.8	-1.7	-38.1	3.4	38.1	3.8	38.2
	Min Mz	SRV 3/ 5	55.7	-0.5	6.6	2.7	-23.9	-6.0	24.1	6.6	24.6
	Min Mxy	SRV 1/ 121	251.4	0.2	4.8	-1.7	-0.2	3.4	1.7	3.8	3.4
	Min Mxz	SRV 3/ 1	67.9	0.0	6.9	0.0	-27.4	0.1	27.4	0.1	27.4
	Min Myz	SRV 3/ 31	263.7	0.0	4.7	0.0	1.8	0.1	1.8	0.1	1.8
	Max Fx	SRV 1/ 400	48.4	0.0	-0.9	1.7	-34.8	-1.7	34.8	2.4	34.8
	Max Fy	SRV 1/ 5	-653.3	0.6	6.4	0.3	-5.2	-4.8	5.2	4.8	7.1
	Max Fz	SRV 1/ 196	-995.4	0.0	9.7	2.5	10.0	-2.3	10.3	3.4	10.3
	Max Mx	SRV 1/ 8	-765.4	-1.0	7.6	6.7	0.7	2.5	6.7	7.2	2.6
	Max My	SRV 1/ 205	-998.1	0.0	9.7	1.7	10.1	-1.7	10.2	2.4	10.2
Load No.	Max Mz	SRV 3/ 8	-140.1	-0.8	1.1	2.4	-24.4	4.6	24.5	5.2	24.9
20	Max Mxy	SRV 1/ 400	48.4	0.0	-0.9	1.7	-34.8	-1.7	34.8	2.4	34.8
	Max Mxz	SRV 1/ 8	-765.4	-1.0	7.6	6.7	0.7	2.5	6.7	7.2	2.6
Member	Max Myz	SRV 1/ 400	48.4	0.0	-0.9	1.7	-34.8	-1.7	34.8	2.4	34.8
768	Min Fx	SRV 1/ 205	-998.1	0.0	9.7	1.7	10.1	-1.7	10.2	2.4	10.2
	Min Fy	SRV 1/ 8	-765.4	-1.0	7.6	6.7	0.7	2.5	6.7	7.2	2.6
Joint	Min Fz	SRV 1/ 391	45.8	0.0	-0.9	2.5	-34.7	-2.3	34.8	3.4	34.8
746	Min Mx	SRV 3/ 5	-50.4	0.5	0.2	-2.7	-29.1	-1.2	29.3	3.0	29.2
	Min My	SRV 1/ 400	48.4	0.0	-0.9	1.7	-34.8	-1.7	34.8	2.4	34.8
	Min Mz	SRV 1/ 5	-653.3	0.6	6.4	0.3	-5.2	-4.8	5.2	4.8	7.1
	Min Mxy	SRV 3/ 25	-702.1	0.0	6.9	0.0	0.4	0.0	0.4	0.0	0.4
	Min Mxz	SRV 3/ 1	-62.6	0.0	-0.1	0.0	-30.0	0.0	30.0	0.0	30.0
	Min Myz	SRV 3/ 25	-702.1	0.0	6.9	0.0	0.4	0.0	0.4	0.0	0.4

	Combinded Results											
	Max/ Min ID	**Combo ID**	**Fx (kips)**	**Fy (kips)**	**Fz (kips)**	**Mx (ft*kip)**	**My (ft*kip)**	**Mz (ft*kip)**	**Mxy (ft*kip)**	**Mxz (ft*kip)**	**Myz (ft*kip)**
	Max Fx	SRV 1/ 207	77.3	-0.7	98.5	1.1	-633.2	-11.1	633.2	11.1	633.3
	Max Fy	SRV 3/ 5	47.8	2.2	21.4	1.1	132.5	26.5	132.5	26.5	135.1
	Max Fz	SRV 1/ 205	75.1	-0.7	99.8	1.1	-644.3	-11.2	644.3	11.2	644.4
	Max Mx	SRV 1/ 5	65.9	1.0	72.9	4.2	-387.9	8.4	388.0	9.4	388.0
	Max My	SRV 1/ 400	45.1	-0.7	12.3	1.1	220.9	-10.7	220.9	10.7	221.2
Load No.	Max Mz	SRV 3/ 5	47.8	2.2	21.4	1.1	132.5	26.5	132.5	26.5	135.1
21	Max Mxy	SRV 1/ 205	75.1	-0.7	99.8	1.1	-644.3	-11.2	644.3	11.2	644.4
	Max Mxz	SRV 1/ 8	68.5	-6.2	80.7	0.5	-462.5	-76.4	462.5	76.4	468.8
Member	Max Myz	SRV 1/ 205	75.1	-0.7	99.8	1.1	-644.3	-11.2	644.3	11.2	644.4
771	Min Fx	SRV 1/ 400	45.1	-0.7	12.3	1.1	220.9	-10.7	220.9	10.7	221.2
	Min Fy	SRV 1/ 8	68.5	-6.2	80.7	0.5	-462.5	-76.4	462.5	76.4	468.8
Joint	Min Fz	SRV 1/ 400	45.1	-0.7	12.3	1.1	220.9	-10.7	220.9	10.7	221.2
747	Min Mx	SRV 3/ 8	49.9	-3.6	27.6	-1.9	72.8	-41.4	72.8	41.4	83.7
	Min My	SRV 1/ 205	75.1	-0.7	99.8	1.1	-644.3	-11.2	644.3	11.2	644.4
	Min Mz	SRV 1/ 8	68.5	-6.2	80.7	0.5	-462.5	-76.4	462.5	76.4	468.8
	Min Mxy	SRV 1/ 157	53.2	-0.7	34.1	1.1	-9.9	-10.8	9.9	10.8	14.6
	Min Mxz	SRV 3/ 4	46.3	0.0	16.3	-0.1	182.7	0.0	182.7	0.1	182.7
	Min Myz	SRV 1/ 157	53.2	-0.7	34.1	1.1	-9.9	-10.8	9.9	10.8	14.6
	Max Fx	SRV 1/ 400	-34.9	0.6	-12.6	-1.1	-382.5	2.4	382.5	2.6	382.5
	Max Fy	SRV 1/ 8	-58.3	5.8	-80.7	-0.5	-584.9	-2.2	584.9	2.3	584.9
	Max Fz	SRV 1/ 400	-34.9	0.6	-12.6	-1.1	-382.5	2.4	382.5	2.6	382.5
	Max Mx	SRV 3/ 8	-39.7	3.6	-27.6	1.9	-431.5	-5.5	431.5	5.8	431.5
	Max My	SRV 1/ 400	-34.9	0.6	-12.6	-1.1	-382.5	2.4	382.5	2.6	382.5
Load No.	Max Mz	SRV 1/ 248	-47.6	-1.4	-51.1	-4.2	-506.4	6.4	506.4	7.6	506.4
22	Max Mxy	SRV 1/ 205	-64.9	0.6	-99.5	-1.1	-648.5	2.3	648.5	2.5	648.5
	Max Mxz	SRV 1/ 248	-47.6	-1.4	-51.1	-4.2	-506.4	6.4	506.4	7.6	506.4
Member	Max Myz	SRV 1/ 205	-64.9	0.6	-99.5	-1.1	-648.5	2.3	648.5	2.5	648.5
771	Min Fx	SRV 1/ 207	-67.1	0.6	-98.2	-1.1	-643.3	2.3	643.3	2.5	643.3
	Min Fy	SRV 3/ 5	-37.6	-2.2	-21.4	-1.1	-409.8	1.3	409.8	1.7	409.8
Joint	Min Fz	SRV 1/ 205	-64.9	0.6	-99.5	-1.1	-648.5	2.3	648.5	2.5	648.5
748	Min Mx	SRV 1/ 5	-55.7	-1.4	-72.9	-4.2	-557.8	6.3	557.8	7.5	557.8
	Min My	SRV 1/ 205	-64.9	0.6	-99.5	-1.1	-648.5	2.3	648.5	2.5	648.5
	Min Mz	SRV 3/ 35	-47.8	3.6	-49.4	1.9	-482.9	-5.6	482.9	5.9	482.9
	Min Mxy	SRV 1/ 400	-34.9	0.6	-12.6	-1.1	-382.5	2.4	382.5	2.6	382.5
	Min Mxz	SRV 3/ 1	-37.3	0.0	-18.8	0.1	-407.6	0.0	407.6	0.1	407.6
	Min Myz	SRV 1/ 400	-34.9	0.6	-12.6	-1.1	-382.5	2.4	382.5	2.6	382.5

AASHTO Limit State: SRV 1 - SERVICE I													
Max/ Min ID	Load Num	Member Num	Joint Num	Limit State/ Combo ID	Fx (kips)	Fy (kips)	Fz (kips)	Mx (ft*kip)	My (ft*kip)	Mz (ft*kip)	Mxy (ft*kip)	Mxz (ft*kip)	Myz (ft*kip)
Max Fx	1	741	727	SRV 1/ 484	1341.3	-0.2	5.0	1.4	5.1	-2.0	5.3	2.4	5.5
Max Fy	6	747	732	SRV 1/ 2	-252.0	5.9	-21.1	-1.0	-105.8	0.1	105.8	1.0	105.8
Max Fz	21	771	747	SRV 1/ 205	75.1	-0.7	99.8	1.1	-644.3	-11.2	644.3	11.2	644.4
Max Mx	7	750	733	SRV 1/ 38	-423.6	-2.0	9.4	9.8	-38.1	-26.6	39.4	28.3	46.5
Max My	21	771	747	SRV 1/ 400	45.1	-0.7	12.3	1.1	220.9	-10.7	220.9	10.7	221.2
Max Mz	21	771	747	SRV 1/ 401	46.9	2.0	18.6	2.6	158.1	22.5	158.1	22.6	159.7
Max Mxy	22	771	748	SRV 1/ 205	-64.9	0.6	-99.5	-1.1	-648.5	2.3	648.5	2.5	648.5
Max Mxz	21	771	747	SRV 1/ 8	68.5	-6.2	80.7	0.5	-462.5	-76.4	462.5	76.4	468.8
Max Myz	22	771	748	SRV 1/ 205	-64.9	0.6	-99.5	-1.1	-648.5	2.3	648.5	2.5	648.5
Min Fx	2	741	728	SRV 1/ 484	-1334.5	0.0	4.9	-1.4	-6.5	0.2	6.6	1.4	6.5
Min Fy	21	771	747	SRV 1/ 8	68.5	-6.2	80.7	0.5	-462.5	-76.4	462.5	76.4	468.8
Min Fz	22	771	748	SRV 1/ 205	-64.9	0.6	-99.5	-1.1	-648.5	2.3	648.5	2.5	648.5
Min Mx	8	750	734	SRV 1/ 38	429.1	2.1	-4.4	-9.8	-58.8	-2.1	59.6	10.0	58.8
Min My	22	771	748	SRV 1/ 205	-64.9	0.6	-99.5	-1.1	-648.5	2.3	648.5	2.5	648.5
Min Mz	21	771	747	SRV 1/ 8	68.5	-6.2	80.7	0.5	-462.5	-76.4	462.5	76.4	468.8
Min Mxy	16	762	742	SRV 1/ 167	-208.8	0.6	6.9	0.0	0.0	-5.3	0.0	5.3	5.3
Min Mxz	15	762	741	SRV 1/ 5	144.3	-0.1	-0.1	0.0	45.6	0.0	45.6	0.0	45.6
Min Myz	2	741	728	SRV 1/ 276	-1092.4	-0.1	5.7	-1.8	0.0	0.2	1.8	1.8	0.2

AASHTO Limit State: SRV 1 - SERVICE I

	Max/ Min ID	Combo ID	Fx (kips)	Fy (kips)	Fz (kips)	Mx (ft*kip)	My (ft*kip)	Mz (ft*kip)	Mxy (ft*kip)	Mxz (ft*kip)	Myz (ft*kip)
	Max Fx	SRV 1/ 484	1341.3	-0.2	5.0	1.4	5.1	-2.0	5.3	2.4	5.5
	Max Fy	SRV 1/ 37	1098.0	-0.2	3.6	1.4	27.3	-2.0	27.3	2.4	27.3
	Max Fz	SRV 1/ 480	1266.6	-0.2	5.6	1.4	-2.9	-2.0	3.2	2.4	3.5
	Max Mx	SRV 1/ 1	1108.2	-0.5	3.9	2.6	21.6	-4.5	21.8	5.1	22.1
	Max My	SRV 1/ 118	614.6	-0.2	1.2	1.4	52.3	-2.0	52.3	2.4	52.3
Load No.	Max Mz	SRV 1/ 41	1039.0	-0.2	4.2	0.9	19.0	0.6	19.0	1.1	19.0
1	Max Mxy	SRV 1/ 118	614.6	-0.2	1.2	1.4	52.3	-2.0	52.3	2.4	52.3
	Max Mxz	SRV 1/ 8	1113.0	-0.6	4.4	1.3	16.1	-6.5	16.1	6.6	17.4
Member	Max Myz	SRV 1/ 118	614.6	-0.2	1.2	1.4	52.3	-2.0	52.3	2.4	52.3
741	Min Fx	SRV 1/ 121	532.7	-0.2	1.7	1.4	44.9	-2.0	44.9	2.4	44.9
	Min Fy	SRV 1/ 2	1090.1	-0.6	4.3	0.9	17.0	-3.9	17.0	4.0	17.4
Joint	Min Fz	SRV 1/ 118	614.6	-0.2	1.2	1.4	52.3	-2.0	52.3	2.4	52.3
727	Min Mx	SRV 1/ 38	1079.9	-0.3	4.0	-0.3	22.7	-1.4	22.7	1.4	22.7
	Min My	SRV 1/ 486	1272.7	-0.2	5.6	1.4	-3.3	-2.0	3.5	2.4	3.8
	Min Mz	SRV 1/ 8	1113.0	-0.6	4.4	1.3	16.1	-6.5	16.1	6.6	17.4
	Min Mxy	SRV 1/ 485	1300.3	-0.3	5.3	0.1	1.3	-4.0	1.3	4.0	4.2
	Min Mxz	SRV 1/ 41	1039.0	-0.2	4.2	0.9	19.0	0.6	19.0	1.1	19.0
	Min Myz	SRV 1/ 473	1234.8	-0.3	5.3	1.3	-0.5	-0.4	1.4	1.4	0.6
	Max Fx	SRV 1/ 121	-526.7	0.0	8.6	-1.4	33.5	0.2	33.5	1.4	33.5
	Max Fy	SRV 1/ 38	-1073.9	0.1	6.3	0.3	5.6	-2.5	5.6	2.5	6.1
	Max Fz	SRV 1/ 118	-608.6	0.0	9.1	-1.4	36.6	0.2	36.6	1.4	36.6
	Max Mx	SRV 1/ 38	-1073.9	0.1	6.3	0.3	5.6	-2.5	5.6	2.5	6.1
	Max My	SRV 1/ 118	-608.6	0.0	9.1	-1.4	36.6	0.2	36.6	1.4	36.6
Load No.	Max Mz	SRV 1/ 1	-1101.8	-0.2	6.2	-2.6	5.8	0.4	6.3	2.6	5.8
2	Max Mxy	SRV 1/ 118	-608.6	0.0	9.1	-1.4	36.6	0.2	36.6	1.4	36.6
	Max Mxz	SRV 1/ 5	-1042.8	-0.2	5.6	-2.1	1.0	-1.6	2.3	2.6	1.9
Member	Max Myz	SRV 1/ 118	-608.6	0.0	9.1	-1.4	36.6	0.2	36.6	1.4	36.6
741	Min Fx	SRV 1/ 484	-1334.5	0.0	4.9	-1.4	-6.5	0.2	6.6	1.4	6.5
	Min Fy	SRV 1/ 1	-1101.8	-0.2	6.2	-2.6	5.8	0.4	6.3	2.6	5.8
Joint	Min Fz	SRV 1/ 480	-1259.8	0.0	4.3	-1.4	-10.9	0.2	11.0	1.4	10.9
728	Min Mx	SRV 1/ 1	-1101.8	-0.2	6.2	-2.6	5.8	0.4	6.3	2.6	5.8
	Min My	SRV 1/ 486	-1265.9	0.0	4.3	-1.4	-11.4	0.2	11.5	1.4	11.4
	Min Mz	SRV 1/ 29	-1075.5	0.0	6.2	-0.1	5.1	-2.5	5.1	2.5	5.6
	Min Mxy	SRV 1/ 65	-1091.9	0.0	5.4	-0.1	0.1	-2.5	0.2	2.5	2.5
	Min Mxz	SRV 1/ 44	-1096.8	0.1	6.2	-0.1	3.9	-0.5	3.9	0.5	3.9
	Min Myz	SRV 1/ 276	-1092.4	-0.1	5.7	-1.8	0.0	0.2	1.8	1.8	0.2

AASHTO Limit State: SRV 1 - SERVICE I

	Max/ Min ID	Combo ID	Fx (kips)	Fy (kips)	Fz (kips)	Mx (ft*kip)	My (ft*kip)	Mz (ft*kip)	Mxy (ft*kip)	Mxz (ft*kip)	Myz (ft*kip)
	Max Fx	SRV 1/ 366	-487.7	-0.1	0.9	-0.9	18.5	1.5	18.5	1.7	18.6
	Max Fy	SRV 1/ 37	-731.6	-0.1	3.1	-0.9	5.6	1.5	5.7	1.7	5.8
	Max Fz	SRV 1/ 239	-738.8	-0.7	6.3	0.2	-20.9	-0.4	20.9	0.5	20.9
	Max Mx	SRV 1/ 38	-690.6	-3.5	3.6	8.8	0.1	-35.4	8.8	36.5	35.4
	Max My	SRV 1/ 367	-564.8	-0.1	0.0	-0.9	29.9	1.5	29.9	1.7	29.9
Load No.	Max Mz	SRV 1/ 1	-737.5	-0.1	3.4	-1.3	3.3	2.2	3.5	2.5	4.0
3	Max Mxy	SRV 1/ 367	-564.8	-0.1	0.0	-0.9	29.9	1.5	29.9	1.7	29.9
	Max Mxz	SRV 1/ 38	-690.6	-3.5	3.6	8.8	0.1	-35.4	8.8	36.5	35.4
Member	Max Myz	SRV 1/ 362	-528.2	-3.5	0.4	8.8	23.9	-35.4	25.5	36.5	42.7
744	Min Fx	SRV 1/ 235	-818.5	-0.1	5.3	-0.9	-9.7	1.5	9.7	1.7	9.8
	Min Fy	SRV 1/ 11	-695.0	-3.6	3.8	8.5	-1.6	-34.9	8.6	35.9	34.9
Joint	Min Fz	SRV 1/ 118	-592.6	-0.1	-0.1	-0.9	28.6	1.5	28.6	1.7	28.6
729	Min Mx	SRV 1/ 1	-737.5	-0.1	3.4	-1.3	3.3	2.2	3.5	2.5	4.0
	Min My	SRV 1/ 238	-740.9	-0.1	6.2	-0.9	-21.1	1.5	21.1	1.7	21.2
	Min Mz	SRV 1/ 38	-690.6	-3.5	3.6	8.8	0.1	-35.4	8.8	36.5	35.4
	Min Mxy	SRV 1/ 73	-743.4	-0.1	3.7	-0.9	1.0	1.5	1.3	1.7	1.8
	Min Mxz	SRV 1/ 23	-654.4	-0.7	4.2	0.1	-6.6	-0.1	6.6	0.1	6.6
	Min Myz	SRV 1/ 73	-743.4	-0.1	3.7	-0.9	1.0	1.5	1.3	1.7	1.8
	Max Fx	SRV 1/ 235	824.4	0.2	-0.3	0.9	-31.7	-3.2	31.7	3.3	31.8
	Max Fy	SRV 1/ 2	702.5	3.9	0.9	-8.4	-19.3	-18.9	21.1	20.7	27.0
	Max Fz	SRV 1/ 118	598.7	0.2	4.7	0.9	6.2	-3.2	6.2	3.3	7.0
	Max Mx	SRV 1/ 1	743.5	0.5	1.4	1.3	-17.3	-7.0	17.3	7.1	18.7
	Max My	SRV 1/ 118	598.7	0.2	4.7	0.9	6.2	-3.2	6.2	3.3	7.0
Load No.	Max Mz	SRV 1/ 37	737.7	0.2	1.5	0.9	-16.4	-3.2	16.5	3.3	16.7
4	Max Mxy	SRV 1/ 485	757.9	2.9	-0.8	-7.7	-35.5	-8.1	36.3	11.2	36.4
	Max Mxz	SRV 1/ 2	702.5	3.9	0.9	-8.4	-19.3	-18.9	21.1	20.7	27.0
Member	Max Myz	SRV 1/ 452	755.7	3.9	-0.7	-8.5	-33.9	-18.5	35.0	20.4	38.6
744	Min Fx	SRV 1/ 366	493.8	0.2	3.7	0.9	1.7	-3.2	1.9	3.3	3.6
	Min Fy	SRV 1/ 37	737.7	0.2	1.5	0.9	-16.4	-3.2	16.5	3.3	16.7
Joint	Min Fz	SRV 1/ 239	744.7	0.8	-1.3	-0.2	-34.6	-10.2	34.6	10.2	36.0
730	Min Mx	SRV 1/ 38	696.7	3.6	1.0	-8.8	-18.4	-15.1	20.4	17.5	23.8
	Min My	SRV 1/ 483	719.5	0.2	-1.3	0.9	-36.2	-3.2	36.2	3.3	36.3
	Min Mz	SRV 1/ 2	702.5	3.9	0.9	-8.4	-19.3	-18.9	21.1	20.7	27.0
	Min Mxy	SRV 1/ 401	507.2	0.8	3.5	-0.2	0.6	-10.2	0.7	10.2	10.2
	Min Mxz	SRV 1/ 37	737.7	0.2	1.5	0.9	-16.4	-3.2	16.5	3.3	16.7
	Min Myz	SRV 1/ 402	505.4	0.2	3.5	0.9	-0.1	-3.2	0.9	3.3	3.2

AASHTO Limit State: SRV 1 - SERVICE I

	Max/ Min ID	Combo ID	Fx (kips)	Fy (kips)	Fz (kips)	Mx (ft*kip)	My (ft*kip)	Mz (ft*kip)	Mxy (ft*kip)	Mxz (ft*kip)	Myz (ft*kip)
	Max Fx	SRV 1/ 243	337.7	0.0	25.2	0.4	-96.9	2.0	96.9	2.0	96.9
	Max Fy	SRV 1/ 37	239.5	0.0	20.6	0.4	-69.0	2.0	69.0	2.0	69.0
	Max Fz	SRV 1/ 238	335.4	0.0	25.3	0.4	-96.9	2.0	96.9	2.0	96.9
	Max Mx	SRV 1/ 5	266.3	-0.8	21.6	2.7	-79.3	-2.7	79.3	3.8	79.3
	Max My	SRV 1/ 367	98.0	0.0	12.6	0.4	-31.5	2.0	31.5	2.0	31.6
Load No.	Max Mz	SRV 1/ 1	247.0	-0.1	21.2	0.9	-71.8	2.4	71.8	2.6	71.8
5	Max Mxy	SRV 1/ 237	337.5	0.0	25.2	0.4	-97.0	2.0	97.0	2.0	97.0
	Max Mxz	SRV 1/ 20	252.2	-5.7	21.0	0.9	-73.7	-50.1	73.7	50.1	89.1
Member	Max Myz	SRV 1/ 236	325.1	-5.5	24.8	0.5	-92.3	-50.0	92.3	50.0	104.9
747	Min Fx	SRV 1/ 367	98.0	0.0	12.6	0.4	-31.5	2.0	31.5	2.0	31.6
	Min Fy	SRV 1/ 11	254.6	-5.7	21.2	1.0	-74.6	-49.7	74.6	49.7	89.6
Joint	Min Fz	SRV 1/ 367	98.0	0.0	12.6	0.4	-31.5	2.0	31.5	2.0	31.6
731	Min Mx	SRV 1/ 44	248.5	-4.8	20.5	-1.3	-72.0	-44.9	72.0	44.9	84.8
	Min My	SRV 1/ 237	337.5	0.0	25.2	0.4	-97.0	2.0	97.0	2.0	97.0
	Min Mz	SRV 1/ 20	252.2	-5.7	21.0	0.9	-73.7	-50.1	73.7	50.1	89.1
	Min Mxy	SRV 1/ 367	98.0	0.0	12.6	0.4	-31.5	2.0	31.5	2.0	31.6
	Min Mxz	SRV 1/ 37	239.5	0.0	20.6	0.4	-69.0	2.0	69.0	2.0	69.0
	Min Myz	SRV 1/ 367	98.0	0.0	12.6	0.4	-31.5	2.0	31.5	2.0	31.6
	Max Fx	SRV 1/ 367	-93.5	0.1	-12.6	-0.4	-76.3	-2.6	76.3	2.6	76.3
	Max Fy	SRV 1/ 2	-252.0	5.9	-21.1	-1.0	-105.8	0.1	105.8	1.0	105.8
	Max Fz	SRV 1/ 367	-93.5	0.1	-12.6	-0.4	-76.3	-2.6	76.3	2.6	76.3
	Max Mx	SRV 1/ 44	-244.0	4.9	-20.5	1.3	-102.9	3.3	102.9	3.5	102.9
	Max My	SRV 1/ 366	-113.2	0.1	-13.3	-0.4	-74.3	-2.6	74.3	2.6	74.3
Load No.	Max Mz	SRV 1/ 44	-244.0	4.9	-20.5	1.3	-102.9	3.3	102.9	3.5	102.9
6	Max Mxy	SRV 1/ 235	-311.1	0.1	-24.4	-0.4	-120.8	-2.6	120.8	2.6	120.8
	Max Mxz	SRV 1/ 5	-261.8	1.1	-21.4	-2.7	-104.6	-5.7	104.6	6.3	104.8
Member	Max Myz	SRV 1/ 235	-311.1	0.1	-24.4	-0.4	-120.8	-2.6	120.8	2.6	120.8
747	Min Fx	SRV 1/ 243	-333.2	0.1	-24.9	-0.4	-117.0	-2.6	117.0	2.6	117.0
	Min Fy	SRV 1/ 37	-235.0	0.1	-20.6	-0.4	-106.7	-2.6	106.7	2.6	106.7
Joint	Min Fz	SRV 1/ 238	-330.9	0.1	-25.0	-0.4	-118.5	-2.6	118.5	2.6	118.5
732	Min Mx	SRV 1/ 5	-261.8	1.1	-21.4	-2.7	-104.6	-5.7	104.6	6.3	104.8
	Min My	SRV 1/ 235	-311.1	0.1	-24.4	-0.4	-120.8	-2.6	120.8	2.6	120.8
	Min Mz	SRV 1/ 5	-261.8	1.1	-21.4	-2.7	-104.6	-5.7	104.6	6.3	104.8
	Min Mxy	SRV 1/ 366	-113.2	0.1	-13.3	-0.4	-74.3	-2.6	74.3	2.6	74.3
	Min Mxz	SRV 1/ 2	-252.0	5.9	-21.1	-1.0	-105.8	0.1	105.8	1.0	105.8
	Min Myz	SRV 1/ 366	-113.2	0.1	-13.3	-0.4	-74.3	-2.6	74.3	2.6	74.3

AASHTO Limit State: SRV 1 - SERVICE I

	Max/ Min ID	Combo ID	Fx (kips)	Fy (kips)	Fz (kips)	Mx (ft*kip)	My (ft*kip)	Mz (ft*kip)	Mxy (ft*kip)	Mxz (ft*kip)	Myz (ft*kip)
	Max Fx	SRV 1/ 368	-283.4	-1.5	7.6	8.5	-27.7	-24.2	29.0	25.6	36.8
	Max Fy	SRV 1/ 1	-457.6	0.1	10.0	-1.1	-42.3	2.2	42.3	2.5	42.4
	Max Fz	SRV 1/ 235	-522.2	0.0	10.9	-0.8	-47.2	1.3	47.2	1.5	47.2
	Max Mx	SRV 1/ 38	-423.6	-2.0	9.4	9.8	-38.1	-26.6	39.4	28.3	46.5
	Max My	SRV 1/ 369	-283.8	0.0	7.5	-0.8	-27.4	1.3	27.5	1.5	27.5
Load No.	Max Mz	SRV 1/ 1	-457.6	0.1	10.0	-1.1	-42.3	2.2	42.3	2.5	42.4
7	Max Mxy	SRV 1/ 235	-522.2	0.0	10.9	-0.8	-47.2	1.3	47.2	1.5	47.2
	Max Mxz	SRV 1/ 38	-423.6	-2.0	9.4	9.8	-38.1	-26.6	39.4	28.3	46.5
Member	Max Myz	SRV 1/ 236	-499.8	-2.0	10.5	9.8	-44.0	-26.6	45.0	28.3	51.4
750	Min Fx	SRV 1/ 235	-522.2	0.0	10.9	-0.8	-47.2	1.3	47.2	1.5	47.2
	Min Fy	SRV 1/ 29	-425.6	-2.0	9.5	9.7	-38.3	-26.3	39.5	28.1	46.5
Joint	Min Fz	SRV 1/ 363	-288.4	0.0	7.5	-0.8	-28.0	1.3	28.1	1.5	28.1
733	Min Mx	SRV 1/ 1	-457.6	0.1	10.0	-1.1	-42.3	2.2	42.3	2.5	42.4
	Min My	SRV 1/ 235	-522.2	0.0	10.9	-0.8	-47.2	1.3	47.2	1.5	47.2
	Min Mz	SRV 1/ 38	-423.6	-2.0	9.4	9.8	-38.1	-26.6	39.4	28.3	46.5
	Min Mxy	SRV 1/ 369	-283.8	0.0	7.5	-0.8	-27.4	1.3	27.5	1.5	27.5
	Min Mxz	SRV 1/ 5	-432.5	-0.3	9.4	0.2	-38.6	-0.2	38.6	0.3	38.6
	Min Myz	SRV 1/ 369	-283.8	0.0	7.5	-0.8	-27.4	1.3	27.5	1.5	27.5
	Max Fx	SRV 1/ 235	527.3	0.1	-5.5	0.8	-68.3	-2.1	68.3	2.3	68.4
	Max Fy	SRV 1/ 2	440.5	2.4	-4.4	-9.5	-59.2	-4.4	60.0	10.4	59.4
	Max Fz	SRV 1/ 327	305.3	0.4	-2.5	1.1	-43.1	-4.4	43.1	4.6	43.3
	Max Mx	SRV 1/ 1	462.9	0.4	-4.8	1.1	-61.9	-4.4	61.9	4.6	62.1
	Max My	SRV 1/ 366	290.8	0.1	-2.5	0.8	-42.0	-2.1	42.0	2.3	42.0
Load No.	Max Mz	SRV 1/ 44	409.2	1.6	-4.2	-8.5	-58.1	1.7	58.7	8.7	58.1
8	Max Mxy	SRV 1/ 235	527.3	0.1	-5.5	0.8	-68.3	-2.1	68.3	2.3	68.4
	Max Mxz	SRV 1/ 11	437.6	2.3	-4.4	-9.6	-59.1	-4.2	59.8	10.4	59.2
Member	Max Myz	SRV 1/ 235	527.3	0.1	-5.5	0.8	-68.3	-2.1	68.3	2.3	68.4
750	Min Fx	SRV 1/ 368	288.9	1.6	-2.6	-8.5	-43.7	1.7	44.5	8.7	43.7
	Min Fy	SRV 1/ 37	451.5	0.1	-4.8	0.8	-61.5	-2.1	61.5	2.3	61.5
Joint	Min Fz	SRV 1/ 163	515.9	0.4	-5.5	1.1	-67.9	-4.4	67.9	4.6	68.0
734	Min Mx	SRV 1/ 38	429.1	2.1	-4.4	-9.8	-58.8	-2.1	59.6	10.0	58.8
	Min My	SRV 1/ 235	527.3	0.1	-5.5	0.8	-68.3	-2.1	68.3	2.3	68.4
	Min Mz	SRV 1/ 5	437.8	0.8	-4.2	-0.2	-57.4	-8.2	57.4	8.2	58.0
	Min Mxy	SRV 1/ 366	290.8	0.1	-2.5	0.8	-42.0	-2.1	42.0	2.3	42.0
	Min Mxz	SRV 1/ 37	451.5	0.1	-4.8	0.8	-61.5	-2.1	61.5	2.3	61.5
	Min Myz	SRV 1/ 366	290.8	0.1	-2.5	0.8	-42.0	-2.1	42.0	2.3	42.0

AASHTO Limit State: SRV 1 - SERVICE I

	Max/ Min ID	Combo ID	Fx (kips)	Fy (kips)	Fz (kips)	Mx (ft*kip)	My (ft*kip)	Mz (ft*kip)	Mxy (ft*kip)	Mxz (ft*kip)	Myz (ft*kip)
	Max Fx	SRV 1/ 238	270.3	-0.1	24.6	0.1	-100.1	1.7	100.1	1.7	100.1
	Max Fy	SRV 1/ 37	199.3	-0.1	21.9	0.1	-90.5	1.7	90.5	1.7	90.5
	Max Fz	SRV 1/ 238	270.3	-0.1	24.6	0.1	-100.1	1.7	100.1	1.7	100.1
	Max Mx	SRV 1/ 2	203.2	-5.0	21.4	3.9	-87.5	-42.5	87.6	42.6	97.3
	Max My	SRV 1/ 368	108.1	-4.1	16.3	1.8	-67.3	-37.5	67.3	37.5	77.0
Load No.	Max Mz	SRV 1/ 1	206.0	-0.2	22.4	0.5	-92.2	2.3	92.2	2.3	92.2
9	Max Mxy	SRV 1/ 235	248.6	-0.1	24.4	0.1	-100.5	1.7	100.5	1.7	100.5
	Max Mxz	SRV 1/ 20	199.4	-5.0	21.1	3.9	-86.5	-43.0	86.6	43.2	96.6
Member	Max Myz	SRV 1/ 236	245.8	-4.9	23.4	3.5	-95.8	-43.0	95.9	43.1	105.0
753	Min Fx	SRV 1/ 367	97.3	-0.1	16.2	0.1	-67.5	1.7	67.5	1.7	67.5
	Min Fy	SRV 1/ 11	201.5	-5.0	21.3	3.9	-87.1	-42.7	87.1	42.9	97.0
Joint	Min Fz	SRV 1/ 367	97.3	-0.1	16.2	0.1	-67.5	1.7	67.5	1.7	67.5
735	Min Mx	SRV 1/ 37	199.3	-0.1	21.9	0.1	-90.5	1.7	90.5	1.7	90.5
	Min My	SRV 1/ 235	248.6	-0.1	24.4	0.1	-100.5	1.7	100.5	1.7	100.5
	Min Mz	SRV 1/ 20	199.4	-5.0	21.1	3.9	-86.5	-43.0	86.6	43.2	96.6
	Min Mxy	SRV 1/ 368	108.1	-4.1	16.3	1.8	-67.3	-37.5	67.3	37.5	77.0
	Min Mxz	SRV 1/ 73	212.7	-0.1	22.9	0.1	-93.9	1.7	93.9	1.7	93.9
	Min Myz	SRV 1/ 369	121.0	-0.1	16.5	0.1	-67.4	1.7	67.4	1.7	67.4
	Max Fx	SRV 1/ 367	-93.3	0.2	-15.5	-0.1	-53.9	-2.6	53.9	2.6	54.0
	Max Fy	SRV 1/ 2	-199.2	5.2	-20.6	-3.9	-72.1	3.6	72.2	5.3	72.2
	Max Fz	SRV 1/ 367	-93.3	0.2	-15.5	-0.1	-53.9	-2.6	53.9	2.6	54.0
	Max Mx	SRV 1/ 37	-195.3	0.2	-21.2	-0.1	-73.8	-2.6	73.8	2.6	73.9
	Max My	SRV 1/ 367	-93.3	0.2	-15.5	-0.1	-53.9	-2.6	53.9	2.6	54.0
Load No.	Max Mz	SRV 1/ 44	-178.8	4.2	-19.0	-1.8	-66.0	5.7	66.0	6.0	66.3
10	Max Mxy	SRV 1/ 238	-266.3	0.2	-23.7	-0.1	-84.5	-2.6	84.5	2.6	84.5
	Max Mxz	SRV 1/ 38	-192.5	5.0	-20.2	-3.5	-70.4	5.6	70.5	6.6	70.6
Member	Max Myz	SRV 1/ 238	-266.3	0.2	-23.7	-0.1	-84.5	-2.6	84.5	2.6	84.5
753	Min Fx	SRV 1/ 238	-266.3	0.2	-23.7	-0.1	-84.5	-2.6	84.5	2.6	84.5
	Min Fy	SRV 1/ 37	-195.3	0.2	-21.2	-0.1	-73.8	-2.6	73.8	2.6	73.9
Joint	Min Fz	SRV 1/ 238	-266.3	0.2	-23.7	-0.1	-84.5	-2.6	84.5	2.6	84.5
736	Min Mx	SRV 1/ 2	-199.2	5.2	-20.6	-3.9	-72.1	3.6	72.2	5.3	72.2
	Min My	SRV 1/ 238	-266.3	0.2	-23.7	-0.1	-84.5	-2.6	84.5	2.6	84.5
	Min Mz	SRV 1/ 5	-210.1	1.1	-20.7	-2.3	-73.1	-4.7	73.1	5.2	73.3
	Min Mxy	SRV 1/ 367	-93.3	0.2	-15.5	-0.1	-53.9	-2.6	53.9	2.6	54.0
	Min Mxz	SRV 1/ 37	-195.3	0.2	-21.2	-0.1	-73.8	-2.6	73.8	2.6	73.9
	Min Myz	SRV 1/ 367	-93.3	0.2	-15.5	-0.1	-53.9	-2.6	53.9	2.6	54.0

AASHTO Limit State: SRV 1 - SERVICE I

	Max/ Min ID	Combo ID	Fx (kips)	Fy (kips)	Fz (kips)	Mx (ft*kip)	My (ft*kip)	Mz (ft*kip)	Mxy (ft*kip)	Mxz (ft*kip)	Myz (ft*kip)
	Max Fx	SRV 1/ 286	-139.6	0.1	3.9	-0.9	5.4	1.6	5.5	1.8	5.6
	Max Fy	SRV 1/ 1	-263.2	0.2	5.6	-1.5	-7.4	3.0	7.6	3.3	8.0
	Max Fz	SRV 1/ 157	-336.1	0.1	6.7	-0.9	-21.9	1.6	21.9	1.8	22.0
	Max Mx	SRV 1/ 38	-219.8	-1.1	5.1	8.2	-3.9	-17.9	9.1	19.7	18.4
	Max My	SRV 1/ 448	-143.2	0.1	4.0	-0.9	6.5	1.6	6.6	1.8	6.7
Load No.	Max Mz	SRV 1/ 1	-263.2	0.2	5.6	-1.5	-7.4	3.0	7.6	3.3	8.0
11	Max Mxy	SRV 1/ 157	-336.1	0.1	6.7	-0.9	-21.9	1.6	21.9	1.8	22.0
	Max Mxz	SRV 1/ 38	-219.8	-1.1	5.1	8.2	-3.9	-17.9	9.1	19.7	18.4
Member	Max Myz	SRV 1/ 155	-291.6	-1.1	5.9	8.2	-14.7	-17.9	16.8	19.7	23.2
756	Min Fx	SRV 1/ 157	-336.1	0.1	6.7	-0.9	-21.9	1.6	21.9	1.8	22.0
	Min Fy	SRV 1/ 38	-219.8	-1.1	5.1	8.2	-3.9	-17.9	9.1	19.7	18.4
Joint	Min Fz	SRV 1/ 286	-139.6	0.1	3.9	-0.9	5.4	1.6	5.5	1.8	5.6
737	Min Mx	SRV 1/ 1	-263.2	0.2	5.6	-1.5	-7.4	3.0	7.6	3.3	8.0
	Min My	SRV 1/ 157	-336.1	0.1	6.7	-0.9	-21.9	1.6	21.9	1.8	22.0
	Min Mz	SRV 1/ 38	-219.8	-1.1	5.1	8.2	-3.9	-17.9	9.1	19.7	18.4
	Min Mxy	SRV 1/ 447	-165.3	0.1	4.6	-0.9	0.3	1.6	1.0	1.8	1.6
	Min Mxz	SRV 1/ 5	-238.4	-0.2	5.6	0.2	-7.9	-0.2	7.9	0.3	7.9
	Min Myz	SRV 1/ 447	-165.3	0.1	4.6	-0.9	0.3	1.6	1.0	1.8	1.6
	Max Fx	SRV 1/ 157	341.0	0.1	-1.0	0.9	-34.0	-1.8	34.1	2.0	34.1
	Max Fy	SRV 1/ 2	236.9	1.5	0.3	-7.6	-31.3	-1.1	32.2	7.7	31.3
	Max Fz	SRV 1/ 277	147.0	0.2	1.6	1.1	-22.5	-2.6	22.5	2.8	22.7
	Max Mx	SRV 1/ 1	268.3	0.3	0.0	1.5	-32.6	-3.7	32.6	4.0	32.8
	Max My	SRV 1/ 367	192.7	0.1	1.2	0.9	-20.6	-1.8	20.6	2.0	20.6
Load No.	Max Mz	SRV 1/ 44	187.2	0.9	0.9	-6.5	-28.0	3.3	28.7	7.3	28.2
12	Max Mxy	SRV 1/ 238	296.8	0.1	-0.7	0.9	-39.2	-1.8	39.3	2.0	39.3
	Max Mxz	SRV 1/ 38	225.1	1.3	0.4	-8.2	-30.5	0.8	31.5	8.2	30.5
Member	Max Myz	SRV 1/ 238	296.8	0.1	-0.7	0.9	-39.2	-1.8	39.3	2.0	39.3
756	Min Fx	SRV 1/ 286	144.9	0.1	1.6	0.9	-22.4	-1.8	22.4	2.0	22.4
	Min Fy	SRV 1/ 37	256.5	0.1	0.1	0.9	-31.8	-1.8	31.8	2.0	31.8
Joint	Min Fz	SRV 1/ 148	339.0	0.2	-1.0	1.1	-33.9	-2.6	33.9	2.8	34.0
738	Min Mx	SRV 1/ 38	225.1	1.3	0.4	-8.2	-30.5	0.8	31.5	8.2	30.5
	Min My	SRV 1/ 238	296.8	0.1	-0.7	0.9	-39.2	-1.8	39.3	2.0	39.3
	Min Mz	SRV 1/ 5	243.5	0.7	0.0	-0.2	-32.5	-6.2	32.5	6.2	33.1
	Min Mxy	SRV 1/ 367	192.7	0.1	1.2	0.9	-20.6	-1.8	20.6	2.0	20.6
	Min Mxz	SRV 1/ 37	256.5	0.1	0.1	0.9	-31.8	-1.8	31.8	2.0	31.8
	Min Myz	SRV 1/ 367	192.7	0.1	1.2	0.9	-20.6	-1.8	20.6	2.0	20.6

	AASHTO Limit State: SRV 1 - SERVICE I											
	Max/ Min ID	**Combo ID**	**Fx (kips)**	**Fy (kips)**	**Fz (kips)**	**Mx (ft*kip)**	**My (ft*kip)**	**Mz (ft*kip)**	**Mxy (ft*kip)**	**Mxz (ft*kip)**	**Myz (ft*kip)**
	Max Fx	SRV 1/ 157	96.7	-0.1	16.4	-0.2	-60.3	2.2	60.3	2.2	60.3
	Max Fy	SRV 1/ 37	-1.4	-0.1	8.3	-0.2	-34.3	2.2	34.3	2.2	34.4
	Max Fz	SRV 1/ 157	96.7	-0.1	16.4	-0.2	-60.3	2.2	60.3	2.2	60.3
	Max Mx	SRV 1/ 20	1.1	-3.8	7.5	4.6	-31.1	-30.2	31.5	30.5	43.3
	Max My	SRV 1/ 448	-70.1	-0.1	2.7	-0.2	-13.1	2.2	13.1	2.2	13.3
Load No.	Max Mz	SRV 1/ 1	7.0	-0.1	9.0	0.0	-36.5	3.7	36.5	3.7	36.7
13	Max Mxy	SRV 1/ 157	96.7	-0.1	16.4	-0.2	-60.3	2.2	60.3	2.2	60.3
	Max Mxz	SRV 1/ 38	-2.5	-3.7	7.2	4.4	-30.2	-30.8	30.6	31.1	43.2
Member	Max Myz	SRV 1/ 157	96.7	-0.1	16.4	-0.2	-60.3	2.2	60.3	2.2	60.3
759	Min Fx	SRV 1/ 286	-72.8	-0.1	3.7	-0.2	-16.0	2.2	16.0	2.2	16.2
	Min Fy	SRV 1/ 11	3.7	-3.8	7.7	4.6	-31.8	-29.8	32.2	30.1	43.6
Joint	Min Fz	SRV 1/ 448	-70.1	-0.1	2.7	-0.2	-13.1	2.2	13.1	2.2	13.3
739	Min Mx	SRV 1/ 37	-1.4	-0.1	8.3	-0.2	-34.3	2.2	34.3	2.2	34.4
	Min My	SRV 1/ 157	96.7	-0.1	16.4	-0.2	-60.3	2.2	60.3	2.2	60.3
	Min Mz	SRV 1/ 38	-2.5	-3.7	7.2	4.4	-30.2	-30.8	30.6	31.1	43.2
	Min Mxy	SRV 1/ 448	-70.1	-0.1	2.7	-0.2	-13.1	2.2	13.1	2.2	13.3
	Min Mxz	SRV 1/ 37	-1.4	-0.1	8.3	-0.2	-34.3	2.2	34.3	2.2	34.4
	Min Myz	SRV 1/ 448	-70.1	-0.1	2.7	-0.2	-13.1	2.2	13.1	2.2	13.3
	Max Fx	SRV 1/ 286	76.3	0.1	-2.7	0.2	-6.6	-2.9	6.6	2.9	7.2
	Max Fy	SRV 1/ 2	-2.4	3.9	-6.7	-4.5	-19.5	2.4	20.0	5.1	19.6
	Max Fz	SRV 1/ 448	73.6	0.1	-1.7	0.2	-1.8	-2.9	1.8	2.9	3.4
	Max Mx	SRV 1/ 37	4.9	0.1	-7.3	0.2	-21.3	-2.9	21.3	2.9	21.5
	Max My	SRV 1/ 205	53.7	0.1	-2.1	0.2	-1.8	-2.9	1.8	2.9	3.4
Load No.	Max Mz	SRV 1/ 74	-10.8	3.7	-7.2	-4.4	-21.4	4.8	21.9	6.4	21.9
14	Max Mxy	SRV 1/ 157	-93.2	0.1	-15.0	0.2	-49.5	-2.9	49.5	2.9	49.6
	Max Mxz	SRV 1/ 74	-10.8	3.7	-7.2	-4.4	-21.4	4.8	21.9	6.4	21.9
Member	Max Myz	SRV 1/ 157	-93.2	0.1	-15.0	0.2	-49.5	-2.9	49.5	2.9	49.6
759	Min Fx	SRV 1/ 157	-93.2	0.1	-15.0	0.2	-49.5	-2.9	49.5	2.9	49.6
	Min Fy	SRV 1/ 37	4.9	0.1	-7.3	0.2	-21.3	-2.9	21.3	2.9	21.5
Joint	Min Fz	SRV 1/ 157	-93.2	0.1	-15.0	0.2	-49.5	-2.9	49.5	2.9	49.6
740	Min Mx	SRV 1/ 20	2.5	3.9	-6.4	-4.6	-18.4	3.1	19.0	5.6	18.7
	Min My	SRV 1/ 157	-93.2	0.1	-15.0	0.2	-49.5	-2.9	49.5	2.9	49.6
	Min Mz	SRV 1/ 1	-3.5	0.3	-7.8	0.0	-23.2	-5.3	23.2	5.3	23.8
	Min Mxy	SRV 1/ 205	53.7	0.1	-2.1	0.2	-1.8	-2.9	1.8	2.9	3.4
	Min Mxz	SRV 1/ 77	-35.5	0.9	-8.2	-1.9	-25.0	-2.0	25.1	2.7	25.1
	Min Myz	SRV 1/ 205	53.7	0.1	-2.1	0.2	-1.8	-2.9	1.8	2.9	3.4

AASHTO Limit State: SRV 1 - SERVICE I

	Max/ Min ID	Combo ID	Fx (kips)	Fy (kips)	Fz (kips)	Mx (ft*kip)	My (ft*kip)	Mz (ft*kip)	Mxy (ft*kip)	Mxz (ft*kip)	Myz (ft*kip)
	Max Fx	SRV 1/ 205	331.9	0.1	-3.4	-1.2	75.5	2.1	75.5	2.4	75.5
	Max Fy	SRV 1/ 1	145.1	0.3	-0.4	-2.4	49.3	4.5	49.4	5.1	49.5
	Max Fz	SRV 1/ 400	-159.7	0.1	4.7	-1.2	-1.7	2.1	2.1	2.4	2.7
	Max Mx	SRV 1/ 38	184.1	-0.3	-1.0	4.5	52.4	-7.9	52.6	9.1	53.0
	Max My	SRV 1/ 205	331.9	0.1	-3.4	-1.2	75.5	2.1	75.5	2.4	75.5
Load No.	Max Mz	SRV 1/ 1	145.1	0.3	-0.4	-2.4	49.3	4.5	49.4	5.1	49.5
15	Max Mxy	SRV 1/ 205	331.9	0.1	-3.4	-1.2	75.5	2.1	75.5	2.4	75.5
	Max Mxz	SRV 1/ 38	184.1	-0.3	-1.0	4.5	52.4	-7.9	52.6	9.1	53.0
Member	Max Myz	SRV 1/ 205	331.9	0.1	-3.4	-1.2	75.5	2.1	75.5	2.4	75.5
762	Min Fx	SRV 1/ 400	-159.7	0.1	4.7	-1.2	-1.7	2.1	2.1	2.4	2.7
	Min Fy	SRV 1/ 38	184.1	-0.3	-1.0	4.5	52.4	-7.9	52.6	9.1	53.0
Joint	Min Fz	SRV 1/ 205	331.9	0.1	-3.4	-1.2	75.5	2.1	75.5	2.4	75.5
741	Min Mx	SRV 1/ 1	145.1	0.3	-0.4	-2.4	49.3	4.5	49.4	5.1	49.5
	Min My	SRV 1/ 400	-159.7	0.1	4.7	-1.2	-1.7	2.1	2.1	2.4	2.7
	Min Mz	SRV 1/ 38	184.1	-0.3	-1.0	4.5	52.4	-7.9	52.6	9.1	53.0
	Min Mxy	SRV 1/ 364	-133.1	0.1	4.1	-1.2	1.5	2.1	2.0	2.4	2.6
	Min Mxz	SRV 1/ 5	144.3	-0.1	-0.1	0.0	45.6	0.0	45.6	0.0	45.6
	Min Myz	SRV 1/ 364	-133.1	0.1	4.1	-1.2	1.5	2.1	2.0	2.4	2.6
	Max Fx	SRV 1/ 400	164.4	0.0	1.2	1.2	-22.6	-1.7	22.7	2.1	22.7
	Max Fy	SRV 1/ 2	-165.9	0.6	6.4	-3.3	-0.9	0.1	3.4	3.3	0.9
	Max Fz	SRV 1/ 196	-324.5	0.1	8.9	1.6	10.6	-2.5	10.8	2.9	10.9
	Max Mx	SRV 1/ 1	-140.2	0.2	6.1	2.4	-2.9	-3.5	3.7	4.2	4.5
	Max My	SRV 1/ 205	-326.8	0.0	8.9	1.2	10.8	-1.7	10.9	2.1	11.0
Load No.	Max Mz	SRV 1/ 44	-231.0	0.0	7.2	-2.2	4.7	3.6	5.2	4.2	5.9
16	Max Mxy	SRV 1/ 400	164.4	0.0	1.2	1.2	-22.6	-1.7	22.7	2.1	22.7
	Max Mxz	SRV 1/ 5	-139.4	0.6	5.8	0.0	-3.5	-5.3	3.5	5.3	6.3
Member	Max Myz	SRV 1/ 400	164.4	0.0	1.2	1.2	-22.6	-1.7	22.7	2.1	22.7
762	Min Fx	SRV 1/ 205	-326.8	0.0	8.9	1.2	10.8	-1.7	10.9	2.1	11.0
	Min Fy	SRV 1/ 37	-153.3	0.0	6.2	1.2	-1.9	-1.7	2.2	2.1	2.6
Joint	Min Fz	SRV 1/ 391	162.2	0.1	1.2	1.6	-22.4	-2.5	22.5	2.9	22.6
742	Min Mx	SRV 1/ 38	-179.0	0.4	6.5	-4.5	0.1	1.8	4.5	4.8	1.8
	Min My	SRV 1/ 400	164.4	0.0	1.2	1.2	-22.6	-1.7	22.7	2.1	22.7
	Min Mz	SRV 1/ 5	-139.4	0.6	5.8	0.0	-3.5	-5.3	3.5	5.3	6.3
	Min Mxy	SRV 1/ 167	-208.8	0.6	6.9	0.0	0.0	-5.3	0.0	5.3	5.3
	Min Mxz	SRV 1/ 8	-217.9	0.2	7.1	-1.0	3.7	1.9	3.8	2.1	4.1
	Min Myz	SRV 1/ 461	-166.0	0.5	6.3	-3.8	0.3	0.5	3.8	3.8	0.6

AASHTO Limit State: SRV 1 - SERVICE I

	Max/ Min ID	Combo ID	Fx (kips)	Fy (kips)	Fz (kips)	Mx (ft*kip)	My (ft*kip)	Mz (ft*kip)	Mxy (ft*kip)	Mxz (ft*kip)	Myz (ft*kip)
	Max Fx	SRV 1/ 400	62.7	0.0	11.4	-0.5	-27.3	3.3	27.3	3.3	27.5
	Max Fy	SRV 1/ 1	-114.2	0.2	-8.8	-0.8	50.9	6.6	50.9	6.6	51.3
	Max Fz	SRV 1/ 400	62.7	0.0	11.4	-0.5	-27.3	3.3	27.3	3.3	27.5
	Max Mx	SRV 1/ 38	-130.1	-1.9	-10.3	2.6	56.1	-14.0	56.1	14.3	57.8
	Max My	SRV 1/ 205	-224.7	0.0	-19.4	-0.5	91.3	3.3	91.3	3.3	91.3
Load No.	Max Mz	SRV 1/ 1	-114.2	0.2	-8.8	-0.8	50.9	6.6	50.9	6.6	51.3
17	Max Mxy	SRV 1/ 205	-224.7	0.0	-19.4	-0.5	91.3	3.3	91.3	3.3	91.3
	Max Mxz	SRV 1/ 38	-130.1	-1.9	-10.3	2.6	56.1	-14.0	56.1	14.3	57.8
Member	Max Myz	SRV 1/ 205	-224.7	0.0	-19.4	-0.5	91.3	3.3	91.3	3.3	91.3
765	Min Fx	SRV 1/ 205	-224.7	0.0	-19.4	-0.5	91.3	3.3	91.3	3.3	91.3
	Min Fy	SRV 1/ 38	-130.1	-1.9	-10.3	2.6	56.1	-14.0	56.1	14.3	57.8
Joint	Min Fz	SRV 1/ 205	-224.7	0.0	-19.4	-0.5	91.3	3.3	91.3	3.3	91.3
743	Min Mx	SRV 1/ 1	-114.2	0.2	-8.8	-0.8	50.9	6.6	50.9	6.6	51.3
	Min My	SRV 1/ 400	62.7	0.0	11.4	-0.5	-27.3	3.3	27.3	3.3	27.5
	Min Mz	SRV 1/ 38	-130.1	-1.9	-10.3	2.6	56.1	-14.0	56.1	14.3	57.8
	Min Mxy	SRV 1/ 404	-31.9	-0.9	4.3	0.0	0.4	-5.4	0.4	5.4	5.4
	Min Mxz	SRV 1/ 8	-155.6	-0.8	-12.4	-0.3	63.8	-2.2	63.8	2.2	63.8
	Min Myz	SRV 1/ 369	-24.0	0.0	4.8	-0.5	-1.2	3.3	1.3	3.3	3.5
	Max Fx	SRV 1/ 205	227.9	0.0	20.7	0.5	40.1	-3.2	40.1	3.3	40.2
	Max Fy	SRV 1/ 11	126.9	2.0	11.2	-2.4	15.0	-0.8	15.2	2.5	15.0
	Max Fz	SRV 1/ 205	227.9	0.0	20.7	0.5	40.1	-3.2	40.1	3.3	40.2
	Max Mx	SRV 1/ 1	117.3	0.1	10.2	0.8	11.8	-6.2	11.8	6.2	13.3
	Max My	SRV 1/ 205	227.9	0.0	20.7	0.5	40.1	-3.2	40.1	3.3	40.2
Load No.	Max Mz	SRV 1/ 38	133.3	1.9	11.6	-2.6	16.0	1.8	16.2	3.1	16.1
18	Max Mxy	SRV 1/ 400	-59.7	0.0	-9.9	0.5	-42.2	-3.2	42.2	3.3	42.3
	Max Mxz	SRV 1/ 1	117.3	0.1	10.2	0.8	11.8	-6.2	11.8	6.2	13.3
Member	Max Myz	SRV 1/ 400	-59.7	0.0	-9.9	0.5	-42.2	-3.2	42.2	3.3	42.3
765	Min Fx	SRV 1/ 400	-59.7	0.0	-9.9	0.5	-42.2	-3.2	42.2	3.3	42.3
	Min Fy	SRV 1/ 37	125.9	0.0	10.7	0.5	13.1	-3.2	13.1	3.3	13.4
Joint	Min Fz	SRV 1/ 400	-59.7	0.0	-9.9	0.5	-42.2	-3.2	42.2	3.3	42.3
744	Min Mx	SRV 1/ 38	133.3	1.9	11.6	-2.6	16.0	1.8	16.2	3.1	16.1
	Min My	SRV 1/ 400	-59.7	0.0	-9.9	0.5	-42.2	-3.2	42.2	3.3	42.3
	Min Mz	SRV 1/ 1	117.3	0.1	10.2	0.8	11.8	-6.2	11.8	6.2	13.3
	Min Mxy	SRV 1/ 472	70.2	0.1	5.5	0.6	-0.1	-4.4	0.6	4.4	4.4
	Min Mxz	SRV 1/ 44	167.3	0.9	14.3	0.0	23.2	-0.2	23.2	0.2	23.2
	Min Myz	SRV 1/ 263	108.8	2.0	5.9	-2.5	0.0	-0.2	2.5	2.5	0.2

AASHTO Limit State: SRV 1 - SERVICE I

	Max/ Min ID	Combo ID	Fx (kips)	Fy (kips)	Fz (kips)	Mx (ft*kip)	My (ft*kip)	Mz (ft*kip)	Mxy (ft*kip)	Mxz (ft*kip)	Myz (ft*kip)
	Max Fx	SRV 1/ 205	1003.6	0.2	-3.0	-1.7	94.3	3.4	94.4	3.8	94.4
	Max Fy	SRV 1/ 8	770.7	1.5	-0.8	-6.7	66.3	19.1	66.6	20.2	69.0
	Max Fz	SRV 1/ 400	-43.3	0.2	7.8	-1.7	-38.1	3.4	38.1	3.8	38.2
	Max Mx	SRV 1/ 41	674.2	-0.4	0.2	1.7	55.5	-4.2	55.6	4.5	55.7
	Max My	SRV 1/ 205	1003.6	0.2	-3.0	-1.7	94.3	3.4	94.4	3.8	94.4
Load No.	Max Mz	SRV 1/ 8	770.7	1.5	-0.8	-6.7	66.3	19.1	66.6	20.2	69.0
19	Max Mxy	SRV 1/ 205	1003.6	0.2	-3.0	-1.7	94.3	3.4	94.4	3.8	94.4
	Max Mxz	SRV 1/ 8	770.7	1.5	-0.8	-6.7	66.3	19.1	66.6	20.2	69.0
Member	Max Myz	SRV 1/ 205	1003.6	0.2	-3.0	-1.7	94.3	3.4	94.4	3.8	94.4
768	Min Fx	SRV 1/ 400	-43.3	0.2	7.8	-1.7	-38.1	3.4	38.1	3.8	38.2
	Min Fy	SRV 1/ 41	674.2	-0.4	0.2	1.7	55.5	-4.2	55.6	4.5	55.7
Joint	Min Fz	SRV 1/ 205	1003.6	0.2	-3.0	-1.7	94.3	3.4	94.4	3.8	94.4
745	Min Mx	SRV 1/ 8	770.7	1.5	-0.8	-6.7	66.3	19.1	66.6	20.2	69.0
	Min My	SRV 1/ 400	-43.3	0.2	7.8	-1.7	-38.1	3.4	38.1	3.8	38.2
	Min Mz	SRV 1/ 41	674.2	-0.4	0.2	1.7	55.5	-4.2	55.6	4.5	55.7
	Min Mxy	SRV 1/ 121	251.4	0.2	4.8	-1.7	-0.2	3.4	1.7	3.8	3.4
	Min Mxz	SRV 1/ 14	662.8	-0.2	0.3	0.1	54.0	-0.5	54.0	0.5	54.0
	Min Myz	SRV 1/ 121	251.4	0.2	4.8	-1.7	-0.2	3.4	1.7	3.8	3.4
	Max Fx	SRV 1/ 400	48.4	0.0	-0.9	1.7	-34.8	-1.7	34.8	2.4	34.8
	Max Fy	SRV 1/ 5	-653.3	0.6	6.4	0.3	-5.2	-4.8	5.2	4.8	7.1
	Max Fz	SRV 1/ 196	-995.4	0.0	9.7	2.5	10.0	-2.3	10.3	3.4	10.3
	Max Mx	SRV 1/ 8	-765.4	-1.0	7.6	6.7	0.7	2.5	6.7	7.2	2.6
	Max My	SRV 1/ 205	-998.1	0.0	9.7	1.7	10.1	-1.7	10.2	2.4	10.2
Load No.	Max Mz	SRV 1/ 44	-780.8	-1.0	7.7	4.7	1.2	4.1	4.9	6.3	4.3
20	Max Mxy	SRV 1/ 400	48.4	0.0	-0.9	1.7	-34.8	-1.7	34.8	2.4	34.8
	Max Mxz	SRV 1/ 8	-765.4	-1.0	7.6	6.7	0.7	2.5	6.7	7.2	2.6
Member	Max Myz	SRV 1/ 400	48.4	0.0	-0.9	1.7	-34.8	-1.7	34.8	2.4	34.8
768	Min Fx	SRV 1/ 205	-998.1	0.0	9.7	1.7	10.1	-1.7	10.2	2.4	10.2
	Min Fy	SRV 1/ 8	-765.4	-1.0	7.6	6.7	0.7	2.5	6.7	7.2	2.6
Joint	Min Fz	SRV 1/ 391	45.8	0.0	-0.9	2.5	-34.7	-2.3	34.8	3.4	34.8
746	Min Mx	SRV 1/ 41	-668.7	0.6	6.5	-1.7	-4.7	-3.2	5.0	3.6	5.7
	Min My	SRV 1/ 400	48.4	0.0	-0.9	1.7	-34.8	-1.7	34.8	2.4	34.8
	Min Mz	SRV 1/ 5	-653.3	0.6	6.4	0.3	-5.2	-4.8	5.2	4.8	7.1
	Min Mxy	SRV 1/ 235	-828.3	0.0	7.8	1.7	0.5	-1.7	1.8	2.4	1.8
	Min Mxz	SRV 1/ 37	-683.9	0.0	6.2	1.7	-5.8	-1.7	6.1	2.4	6.1
	Min Myz	SRV 1/ 235	-828.3	0.0	7.8	1.7	0.5	-1.7	1.8	2.4	1.8

AASHTO Limit State: SRV 1 - SERVICE I

	Max/ Min ID	Combo ID	Fx (kips)	Fy (kips)	Fz (kips)	Mx (ft*kip)	My (ft*kip)	Mz (ft*kip)	Mxy (ft*kip)	Mxz (ft*kip)	Myz (ft*kip)
	Max Fx	SRV 1/ 207	77.3	-0.7	98.5	1.1	-633.2	-11.1	633.2	11.1	633.3
	Max Fy	SRV 1/ 41	66.4	2.0	74.4	2.6	-401.1	22.1	401.1	22.3	401.7
	Max Fz	SRV 1/ 205	75.1	-0.7	99.8	1.1	-644.3	-11.2	644.3	11.2	644.4
	Max Mx	SRV 1/ 5	65.9	1.0	72.9	4.2	-387.9	8.4	388.0	9.4	388.0
	Max My	SRV 1/ 400	45.1	-0.7	12.3	1.1	220.9	-10.7	220.9	10.7	221.2
Load No.	Max Mz	SRV 1/ 401	46.9	2.0	18.6	2.6	158.1	22.5	158.1	22.6	159.7
21	Max Mxy	SRV 1/ 205	75.1	-0.7	99.8	1.1	-644.3	-11.2	644.3	11.2	644.4
	Max Mxz	SRV 1/ 8	68.5	-6.2	80.7	0.5	-462.5	-76.4	462.5	76.4	468.8
Member	Max Myz	SRV 1/ 205	75.1	-0.7	99.8	1.1	-644.3	-11.2	644.3	11.2	644.4
771	Min Fx	SRV 1/ 400	45.1	-0.7	12.3	1.1	220.9	-10.7	220.9	10.7	221.2
	Min Fy	SRV 1/ 8	68.5	-6.2	80.7	0.5	-462.5	-76.4	462.5	76.4	468.8
Joint	Min Fz	SRV 1/ 400	45.1	-0.7	12.3	1.1	220.9	-10.7	220.9	10.7	221.2
747	Min Mx	SRV 1/ 44	69.0	-5.2	82.2	-1.1	-475.7	-62.7	475.7	62.7	479.8
	Min My	SRV 1/ 205	75.1	-0.7	99.8	1.1	-644.3	-11.2	644.3	11.2	644.4
	Min Mz	SRV 1/ 8	68.5	-6.2	80.7	0.5	-462.5	-76.4	462.5	76.4	468.8
	Min Mxy	SRV 1/ 157	53.2	-0.7	34.1	1.1	-9.9	-10.8	9.9	10.8	14.6
	Min Mxz	SRV 1/ 5	65.9	1.0	72.9	4.2	-387.9	8.4	388.0	9.4	388.0
	Min Myz	SRV 1/ 157	53.2	-0.7	34.1	1.1	-9.9	-10.8	9.9	10.8	14.6
	Max Fx	SRV 1/ 400	-34.9	0.6	-12.6	-1.1	-382.5	2.4	382.5	2.6	382.5
	Max Fy	SRV 1/ 8	-58.3	5.8	-80.7	-0.5	-584.9	-2.2	584.9	2.3	584.9
	Max Fz	SRV 1/ 400	-34.9	0.6	-12.6	-1.1	-382.5	2.4	382.5	2.6	382.5
	Max Mx	SRV 1/ 44	-58.8	5.1	-81.9	1.1	-589.4	-4.6	589.4	4.8	589.4
	Max My	SRV 1/ 400	-34.9	0.6	-12.6	-1.1	-382.5	2.4	382.5	2.6	382.5
Load No.	Max Mz	SRV 1/ 248	-47.6	-1.4	-51.1	-4.2	-506.4	6.4	506.4	7.6	506.4
22	Max Mxy	SRV 1/ 205	-64.9	0.6	-99.5	-1.1	-648.5	2.3	648.5	2.5	648.5
	Max Mxz	SRV 1/ 248	-47.6	-1.4	-51.1	-4.2	-506.4	6.4	506.4	7.6	506.4
Member	Max Myz	SRV 1/ 205	-64.9	0.6	-99.5	-1.1	-648.5	2.3	648.5	2.5	648.5
771	Min Fx	SRV 1/ 207	-67.1	0.6	-98.2	-1.1	-643.3	2.3	643.3	2.5	643.3
	Min Fy	SRV 1/ 41	-56.2	-2.1	-74.1	-2.6	-562.3	3.9	562.3	4.6	562.3
Joint	Min Fz	SRV 1/ 205	-64.9	0.6	-99.5	-1.1	-648.5	2.3	648.5	2.5	648.5
748	Min Mx	SRV 1/ 5	-55.7	-1.4	-72.9	-4.2	-557.8	6.3	557.8	7.5	557.8
	Min My	SRV 1/ 205	-64.9	0.6	-99.5	-1.1	-648.5	2.3	648.5	2.5	648.5
	Min Mz	SRV 1/ 44	-58.8	5.1	-81.9	1.1	-589.4	-4.6	589.4	4.8	589.4
	Min Mxy	SRV 1/ 400	-34.9	0.6	-12.6	-1.1	-382.5	2.4	382.5	2.6	382.5
	Min Mxz	SRV 1/ 254	-48.5	2.9	-52.9	-1.8	-515.7	-0.7	515.7	2.0	515.7
	Min Myz	SRV 1/ 400	-34.9	0.6	-12.6	-1.1	-382.5	2.4	382.5	2.6	382.5

Limit State: SERVICE I

CR Creep
LF: 1
CR1: CR+SH+PT_D10K
CR2: CR+SH+PT_EOC

TU Uniform Temperature
LF: 1
TU1: TU+
TU2: TU-
TU3: TU+Temp. Diff.

WS Wind Load on Structure
LF: 0.3
WS1: WS_0 DEG_SRVI
WS2: WS_15 DEG_SRVI
WS3: WS_30 DEG_SRVI
WS4: WS_45 DEG_SRVI
WS5: WS_60 DEG_SRVI
WS6: WS_-15 DEG_SRVI
WS7: WS_-30 DEG_SRVI
WS8: WS_-45 DEG_SRVI
WS9: WS_-60 DEG_SRVI

DW DL Wearing Surfaces & Utilities
LF: 1
DW1: DW

LL Vehicular Live Load
LF: 1
LL1: LL1_Deck
LL2: LL1_Deck Offset
LL3: LL1_Roof
LL4: LL2_Deck
LL5: LL2_Deck Offset
LL6: LL2_Roof
LL7: LL3_Deck
LL8: LL3_Deck Offset
LL9: LL3_Roof

DC DL Structural Components & Attachments
LF: 1
DC1: DC

Combo ID	Load Combinations
SRV 1/ 1	1.00*(CR1*1.00 + TU1*1.00 + WS1*0.30 + DW1*1.00 + LL1*1.00 + DC1*1.00)
SRV 1/ 2	1.00*(CR1*1.00 + TU1*1.00 + WS1*0.30 + DW1*1.00 + LL2*1.00 + DC1*1.00)
SRV 1/ 3	1.00*(CR1*1.00 + TU1*1.00 + WS1*0.30 + DW1*1.00 + LL3*1.00 + DC1*1.00)
SRV 1/ 4	1.00*(CR1*1.00 + TU1*1.00 + WS1*0.30 + DW1*1.00 + LL4*1.00 + DC1*1.00)
SRV 1/ 5	1.00*(CR1*1.00 + TU1*1.00 + WS1*0.30 + DW1*1.00 + LL5*1.00 + DC1*1.00)
SRV 1/ 6	1.00*(CR1*1.00 + TU1*1.00 + WS1*0.30 + DW1*1.00 + LL6*1.00 + DC1*1.00)
SRV 1/ 7	1.00*(CR1*1.00 + TU1*1.00 + WS1*0.30 + DW1*1.00 + LL7*1.00 + DC1*1.00)
SRV 1/ 8	1.00*(CR1*1.00 + TU1*1.00 + WS1*0.30 + DW1*1.00 + LL8*1.00 + DC1*1.00)
SRV 1/ 9	1.00*(CR1*1.00 + TU1*1.00 + WS1*0.30 + DW1*1.00 + LL9*1.00 + DC1*1.00)

Limit State: SERVICE I

CR Creep
LF: 1
CR1: CR+SH+PT_D10K
CR2: CR+SH+PT_EOC

TU Uniform Temperature
LF: 1
TU1: TU+
TU2: TU-
TU3: TU+Temp. Diff.

WS Wind Load on Structure
LF: 0.3
WS1: WS_0 DEG_SRVI
WS2: WS_15 DEG_SRVI
WS3: WS_30 DEG_SRVI
WS4: WS_45 DEG_SRVI
WS5: WS_60 DEG_SRVI
WS6: WS_-15 DEG_SRVI
WS7: WS_-30 DEG_SRVI
WS8: WS_-45 DEG_SRVI
WS9: WS_-60 DEG_SRVI

DW DL Wearing Surfaces & Utilities
LF: 1
DW1: DW

LL Vehicular Live Load
LF: 1
LL1: LL1_Deck
LL2: LL1_Deck Offset
LL3: LL1_Roof
LL4: LL2_Deck
LL5: LL2_Deck Offset
LL6: LL2_Roof
LL7: LL3_Deck
LL8: LL3_Deck Offset
LL9: LL3_Roof

DC DL Structural Components & Attachments
LF: 1
DC1: DC

Load (Row) Number	User's Load ID	Member ID	Joint ID	Fx (kips)	Fy (kips)	Fz (kips)	Mx (ft*kip)	My (ft*kip)	Mz (ft*kip)
1	CR+SH+PT_D10K	741	727	134.9	0	-1.8	0	27.1	0
2	CR+SH+PT_D10K	741	728	-134.9	0	1.8	0	14.2	0
3	CR+SH+PT_D10K	744	729	-207.1	0	1.5	0	-11.8	0
4	CR+SH+PT_D10K	744	730	207.1	0	-1.5	0	-9.9	0
5	CR+SH+PT_D10K	747	731	139.6	0	13.9	0	-55.7	0
6	CR+SH+PT_D10K	747	732	-139.6	0	-13.9	0	-63.2	0
7	CR+SH+PT_D10K	750	733	-300.6	0	4.3	0	-29.1	0
8	CR+SH+PT_D10K	750	734	300.6	0	-4.3	0	-31.8	0
9	CR+SH+PT_D10K	753	735	208.6	0	19.6	0	-75.9	0
10	CR+SH+PT_D10K	753	736	-208.6	0	-19.6	0	-73.5	0
11	CR+SH+PT_D10K	756	737	-316.8	0	4.9	0	-30.7	0
12	CR+SH+PT_D10K	756	738	316.8	0	-4.9	0	-39.6	0
13	CR+SH+PT_D10K	759	739	208.2	0	19.7	0	-72.5	0
14	CR+SH+PT_D10K	759	740	-208.2	0	-19.7	0	-65.7	0
15	CR+SH+PT_D10K	762	741	-197.9	0	3.5	0	-14.1	0
16	CR+SH+PT_D10K	762	742	197.9	0	-3.5	0	-36.7	0
17	CR+SH+PT_D10K	765	743	168.3	0	13.1	0	-41.7	0
18	CR+SH+PT_D10K	765	744	-168.3	0	-13.1	0	-43.8	0
19	CR+SH+PT_D10K	768	745	49.6	0	2.1	0	-2.5	0
20	CR+SH+PT_D10K	768	746	-49.6	0	-2.1	0	-32.5	0
21	CR+SH+PT_D10K	771	747	4.1	0	28.7	0	-8.9	0
22	CR+SH+PT_D10K	771	748	-4.1	0	-28.7	0	-363.2	-0.1
1	CR+SH+PT_EOC	741	727	175.9	0	-1.6	0	24.4	0
2	CR+SH+PT_EOC	741	728	-175.9	0	1.6	0	11.9	0
3	CR+SH+PT_EOC	744	729	-183.7	0	1.5	0	-11	0
4	CR+SH+PT_EOC	744	730	183.7	0	-1.5	0	-10.8	0
5	CR+SH+PT_EOC	747	731	125.6	0	12.8	0	-52.3	0
6	CR+SH+PT_EOC	747	732	-125.6	0	-12.8	0	-56.9	0
7	CR+SH+PT_EOC	750	733	-247.9	0	3.7	0	-23.6	0
8	CR+SH+PT_EOC	750	734	247.9	0	-3.7	0	-28	0
9	CR+SH+PT_EOC	753	735	173.5	0	17.2	0	-66.3	0
10	CR+SH+PT_EOC	753	736	-173.5	0	-17.2	0	-64.9	0
11	CR+SH+PT_EOC	756	737	-281	0	4.4	0	-28.5	0
12	CR+SH+PT_EOC	756	738	281	0	-4.4	0	-35.1	0
13	CR+SH+PT_EOC	759	739	188.3	0	19.3	0	-69.5	0
14	CR+SH+PT_EOC	759	740	-188.3	0	-19.3	0	-65.7	0
15	CR+SH+PT_EOC	762	741	-259.6	0	4.6	0	-26.8	0
16	CR+SH+PT_EOC	762	742	259.6	0	-4.6	0	-38.4	0
17	CR+SH+PT_EOC	765	743	189.1	0	18.6	0	-62.1	0
18	CR+SH+PT_EOC	765	744	-189.1	0	-18.6	0	-59.2	0
19	CR+SH+PT_EOC	768	745	-214.1	0	4.7	0	-36.3	0
20	CR+SH+PT_EOC	768	746	214.1	0	-4.7	0	-41.1	0
21	CR+SH+PT_EOC	771	747	-4	0	6.9	0	221.9	0.1
22	CR+SH+PT_EOC	771	748	4	0	-6.9	0	-311.8	0
1	DC	741	727	685.6	0	5.4	0	-4.7	0
2	DC	741	728	-679.2	0	4.7	0	-2.8	0
3	DC	744	729	-356.6	0	1.6	0	12.7	0
4	DC	744	730	362.6	0	3.2	0	-1.1	0
5	DC	747	731	68.2	0	4.4	0	-8.5	0
6	DC	747	732	-63.7	0	-4.2	0	-28	0
7	DC	750	733	-66	0	4.2	0	-4	0
8	DC	750	734	71.3	0	1	0	-18.1	0
9	DC	753	735	-29.5	0	-0.4	0	-2.1	0
10	DC	753	736	33.5	0	1.2	0	8	0
11	DC	756	737	109.5	0	0.3	0	24.5	0
12	DC	756	738	-104.4	0	5.3	0	11.2	0
13	DC	759	739	-188	0	-11.2	0	39.1	0
14	DC	759	740	191.5	0	12.4	0	43.5	0
15	DC	762	741	319.8	0	-3.2	0	54	0
16	DC	762	742	-314.9	0	8.9	0	33	0
17	DC	765	743	-254.1	0	-18.9	0	79.3	0.1
18	DC	765	744	257.2	0	20.3	0	48.6	0
19	DC	768	745	517	0	-1	0	47.1	0.1
20	DC	768	746	-511.7	0	7.8	0	25	0
21	DC	771	747	59.1	0	37.6	-0.1	-318.5	-0.3
22	DC	771	748	-48.9	0	-37.6	0.1	-169.2	0

Load (Row) Number	User's Load ID	Member ID	Joint ID	Fx (kips)	Fy (kips)	Fz (kips)	Mx (ft*kip)	My (ft*kip)	Mz (ft*kip)
1	DW	741	727	9.9	0	-0.2	0	2.5	0
2	DW	741	728	-9.9	0	0.2	0	1.8	0
3	DW	744	729	-22.4	0	-0.3	0	3	0
4	DW	744	730	22.4	0	0.3	0	1.1	0
5	DW	747	731	-5.2	0	-0.1	0	1.9	0
6	DW	747	732	5.2	0	0.1	0	-1.4	0
7	DW	750	733	-12.3	0	0.2	0	-1.7	0
8	DW	750	734	12.3	0	-0.2	0	-1.4	0
9	DW	753	735	1.5	0	0.6	0	-2.6	0
10	DW	753	736	-1.5	0	-0.6	0	-1.9	0
11	DW	756	737	-17.1	0	0.1	0	-1.1	0
12	DW	756	738	17.1	0	-0.1	0	-0.7	0
13	DW	759	739	0.6	0	0.6	0	-2.2	0
14	DW	759	740	-0.6	0	-0.6	0	-2.1	0
15	DW	762	741	-14	0	0.1	0	-0.8	0
16	DW	762	742	14	0	-0.1	0	-1.1	0
17	DW	765	743	4	0	0.5	0	-1.5	0
18	DW	765	744	-4	0	-0.5	0	-1.6	0
19	DW	768	745	-14.9	0	0.3	0	-3.9	0
20	DW	768	746	14.9	0	-0.3	0	-1.5	0
21	DW	771	747	-0.6	0	-2.6	0	27.8	0
22	DW	771	748	0.6	0	2.6	0	5.9	0
1	LL1_Deck	741	727	36.1	0	-0.7	0	9.2	0
2	LL1_Deck	741	728	-36.1	0	0.7	0	6.5	0
3	LL1_Deck	744	729	-81.9	0	-1	0	10.9	0
4	LL1_Deck	744	730	81.9	0	1	0	3.9	0
5	LL1_Deck	747	731	-18.9	0	-0.2	0	7	0
6	LL1_Deck	747	732	18.9	0	0.2	0	-5	0
7	LL1_Deck	750	733	-44.9	0	0.8	0	-6.4	0
8	LL1_Deck	750	734	44.9	0	-0.8	0	-5.3	0
9	LL1_Deck	753	735	5.6	0	2.1	0	-9.4	0
10	LL1_Deck	753	736	-5.6	0	-2.1	0	-6.8	0
11	LL1_Deck	756	737	-62.7	0	0.5	0	-4.1	0
12	LL1_Deck	756	738	62.7	0	-0.5	0	-2.6	0
13	LL1_Deck	759	739	2.2	0	2.2	0	-8.1	0
14	LL1_Deck	759	740	-2.2	0	-2.2	0	-7.5	0
15	LL1_Deck	762	741	-51.3	0	0.5	0	-3	0
16	LL1_Deck	762	742	51.3	0	-0.5	0	-4	0
17	LL1_Deck	765	743	14.8	0	1.8	0	-5.5	0
18	LL1_Deck	765	744	-14.8	0	-1.8	0	-5.9	0
19	LL1_Deck	768	745	-54.4	0	1.2	0	-14.4	0
20	LL1_Deck	768	746	54.4	0	-1.2	0	-5.4	0
21	LL1_Deck	771	747	-2.3	0	-9.5	0	101.8	0
22	LL1_Deck	771	748	2.3	0	9.5	0	21.6	0
1	LL1_Deck Offset	741	727	18	-0.1	-0.3	-1.7	4.6	0.6
2	LL1_Deck Offset	741	728	-18	0.1	0.3	1.7	3.3	-2.7
3	LL1_Deck Offset	744	729	-40.9	-3.4	-0.5	9.7	5.4	-36.9
4	LL1_Deck Offset	744	730	40.9	3.4	0.5	-9.7	1.9	-11.9
5	LL1_Deck Offset	747	731	-9.4	-5.5	-0.1	0.1	3.5	-51.9
6	LL1_Deck Offset	747	732	9.4	5.5	0.1	-0.1	-2.5	4.7
7	LL1_Deck Offset	750	733	-22.5	-2	0.4	10.6	-3.2	-27.9
8	LL1_Deck Offset	750	734	22.5	2	-0.4	-10.6	-2.6	0
9	LL1_Deck Offset	753	735	2.8	-4.8	1.1	3.4	-4.7	-44.7
10	LL1_Deck Offset	753	736	-2.8	4.8	-1.1	-3.4	-3.4	8.2
11	LL1_Deck Offset	756	737	-31.3	-1.2	0.2	9.1	-2	-19.5
12	LL1_Deck Offset	756	738	31.3	1.2	-0.2	-9.1	-1.3	2.6
13	LL1_Deck Offset	759	739	1.1	-3.6	1.1	4.5	-4	-33
14	LL1_Deck Offset	759	740	-1.1	3.6	-1.1	-4.5	-3.8	7.6
15	LL1_Deck Offset	762	741	-25.6	-0.4	0.2	5.7	-1.5	-10
16	LL1_Deck Offset	762	742	25.6	0.4	-0.2	-5.7	-2	3.5
17	LL1_Deck Offset	765	743	7.4	-1.9	0.9	3.1	-2.7	-17.3
18	LL1_Deck Offset	765	744	-7.4	1.9	-0.9	-3.1	-3	5
19	LL1_Deck Offset	768	745	-27.2	0.5	0.6	0.4	-7.2	3.4
20	LL1_Deck Offset	768	746	27.2	-0.5	-0.6	-0.4	-2.7	4.3
21	LL1_Deck Offset	771	747	-1.1	-1.8	-4.8	-0.7	50.9	-18.4
22	LL1_Deck Offset	771	748	1.1	1.8	4.8	0.7	10.8	-5.3

Load (Row) Number	User's Load ID	Member ID	Joint ID	Fx (kips)	Fy (kips)	Fz (kips)	Mx (ft*kip)	My (ft*kip)	Mz (ft*kip)
1	LL1_Roof	741	727	7.2	0	0.1	0	-0.5	0
2	LL1_Roof	741	728	-7.2	0	-0.1	0	-1.3	0
3	LL1_Roof	744	729	-3.9	0	-0.1	0	-0.2	0
4	LL1_Roof	744	730	3.9	0	0.1	0	1.3	0
5	LL1_Roof	747	731	3	0	0.3	0	-1.2	0
6	LL1_Roof	747	732	-3	0	-0.3	0	-1.4	0
7	LL1_Roof	750	733	-7.6	0	0.1	0	-0.8	0
8	LL1_Roof	750	734	7.6	0	-0.1	0	-0.9	0
9	LL1_Roof	753	735	5.2	0	0.4	0	-1.4	0
10	LL1_Roof	753	736	-5.2	0	-0.4	0	-1.3	0
11	LL1_Roof	756	737	-8.4	0	0.1	0	-1	0
12	LL1_Roof	756	738	8.4	0	-0.1	0	-0.8	0
13	LL1_Roof	759	739	5.4	0	0.4	0	-1.6	0
14	LL1_Roof	759	740	-5.4	0	-0.4	0	-1.3	0
15	LL1_Roof	762	741	-8.4	0	0.1	0	-0.8	0
16	LL1_Roof	762	742	8.4	0	-0.1	0	-0.7	0
17	LL1_Roof	765	743	6.5	0	0.5	0	-1.4	0
18	LL1_Roof	765	744	-6.5	0	-0.5	0	-1.9	0
19	LL1_Roof	768	745	-5.5	0	0.2	0	-1.4	0
20	LL1_Roof	768	746	5.5	0	-0.2	0	-1.5	0
21	LL1_Roof	771	747	3.2	0	0.3	0	2.7	0
22	LL1_Roof	771	748	-3.2	0	-0.3	0	-6.4	0
1	LL2_Deck	741	727	-45.8	0	-0.2	0	1.8	0
2	LL2_Deck	741	728	45.8	0	0.2	0	3.4	0
3	LL2_Deck	744	729	-4.3	0	-0.1	0	-0.5	0
4	LL2_Deck	744	730	4.3	0	0.1	0	1.9	0
5	LL2_Deck	747	731	0.9	0	0.4	0	-1.1	0
6	LL2_Deck	747	732	-0.9	0	-0.4	0	-2.7	0
7	LL2_Deck	750	733	-39.6	0	0.5	0	-5.4	0
8	LL2_Deck	750	734	39.6	0	-0.5	0	-1.6	0
9	LL2_Deck	753	735	27.3	0	2.3	0	-9	0
10	LL2_Deck	753	736	-27.3	0	-2.3	0	-8.7	0
11	LL2_Deck	756	737	-75.8	0	1	0	-9.2	0
12	LL2_Deck	756	738	75.8	0	-1	0	-5	0
13	LL2_Deck	759	739	51.5	0	4.3	0	-15.3	0
14	LL2_Deck	759	740	-51.5	0	-4.3	0	-14.7	0
15	LL2_Deck	762	741	-104.1	0	1.6	0	-13.3	0
16	LL2_Deck	762	742	104.1	0	-1.6	0	-9.2	0
17	LL2_Deck	765	743	68	0	5.3	0	-20.3	0
18	LL2_Deck	765	744	-68	0	-5.3	0	-14.2	0
19	LL2_Deck	768	745	-139.2	0	1.7	0	-20.1	0
20	LL2_Deck	768	746	139.2	0	-1.7	0	-8.6	0
21	LL2_Deck	771	747	-3.7	0	-12.6	0	125.5	0.1
22	LL2_Deck	771	748	3.7	0	12.6	0	37.9	0
1	LL2_Deck Offset	741	727	-22.9	0	-0.1	-0.5	0.9	2.6
2	LL2_Deck Offset	741	728	22.9	0	0.1	0.5	1.7	-2
3	LL2_Deck Offset	744	729	-2.2	-0.6	0	1.1	-0.3	-1.9
4	LL2_Deck Offset	744	730	2.2	0.6	0	-1.1	1	-7
5	LL2_Deck Offset	747	731	0.4	-0.7	0.2	1.8	-0.5	-5.1
6	LL2_Deck Offset	747	732	-0.4	0.7	-0.2	-1.8	-1.3	-1.1
7	LL2_Deck Offset	750	733	-19.8	-0.4	0.2	1.3	-2.7	-2.4
8	LL2_Deck Offset	750	734	19.8	0.4	-0.2	-1.3	-0.8	-3.8
9	LL2_Deck Offset	753	735	13.7	-0.7	1.2	1.8	-4.5	-5.5
10	LL2_Deck Offset	753	736	-13.7	0.7	-1.2	-1.8	-4.4	-0.1
11	LL2_Deck Offset	756	737	-37.9	-0.4	0.5	1.7	-4.6	-3.2
12	LL2_Deck Offset	756	738	37.9	0.4	-0.5	-1.7	-2.5	-2.5
13	LL2_Deck Offset	759	739	25.8	-0.8	2.1	2	-7.6	-6.6
14	LL2_Deck Offset	759	740	-25.8	0.8	-2.1	-2	-7.4	0.9
15	LL2_Deck Offset	762	741	-52.1	-0.4	0.8	2.4	-6.7	-4.5
16	LL2_Deck Offset	762	742	52.1	0.4	-0.8	-2.4	-4.6	-1.8
17	LL2_Deck Offset	765	743	34	-1	2.6	2.6	-10.2	-8.7
18	LL2_Deck Offset	765	744	-34	1	-2.6	-2.6	-7.1	2
19	LL2_Deck Offset	768	745	-69.6	-0.6	0.9	3.4	-10	-7.6
20	LL2_Deck Offset	768	746	69.6	0.6	-0.9	-3.4	-4.3	-1.5
21	LL2_Deck Offset	771	747	-1.9	2.7	-6.3	1.5	62.7	33.2
22	LL2_Deck Offset	771	748	1.9	-2.7	6.3	-1.5	18.9	1.6

Load (Row) Number	User's Load ID	Member ID	Joint ID	Fx (kips)	Fy (kips)	Fz (kips)	Mx (ft*kip)	My (ft*kip)	Mz (ft*kip)
1	LL2_Roof	741	727	-6.1	0	0	0	0.4	0
2	LL2_Roof	741	728	6.1	0	0	0	0.5	0
3	LL2_Roof	744	729	-0.4	0	0	0	0	0
4	LL2_Roof	744	730	0.4	0	0	0	0.3	0
5	LL2_Roof	747	731	-0.1	0	0	0	0	0
6	LL2_Roof	747	732	0.1	0	0	0	-0.3	0
7	LL2_Roof	750	733	-4.5	0	0.1	0	-0.6	0
8	LL2_Roof	750	734	4.5	0	-0.1	0	-0.2	0
9	LL2_Roof	753	735	3.2	0	0.3	0	-1.1	0
10	LL2_Roof	753	736	-3.2	0	-0.3	0	-1	0
11	LL2_Roof	756	737	-9	0	0.1	0	-1.1	0
12	LL2_Roof	756	738	9	0	-0.1	0	-0.6	0
13	LL2_Roof	759	739	6.1	0	0.5	0	-1.8	0
14	LL2_Roof	759	740	-6.1	0	-0.5	0	-1.8	0
15	LL2_Roof	762	741	-12.5	0	0.2	0	-1.6	0
16	LL2_Roof	762	742	12.5	0	-0.2	0	-1.1	0
17	LL2_Roof	765	743	8.1	0	0.6	0	-2.5	0
18	LL2_Roof	765	744	-8.1	0	-0.6	0	-1.7	0
19	LL2_Roof	768	745	-16.9	0	0.2	0	-2.4	0
20	LL2_Roof	768	746	16.9	0	-0.2	0	-1	0
21	LL2_Roof	771	747	-0.5	0	-1.5	0	15.3	0
22	LL2_Roof	771	748	0.5	0	1.5	0	4.6	0
1	LL3_Deck	741	727	81.9	0	-0.5	0	7.5	0
2	LL3_Deck	741	728	-81.9	0	0.5	0	3.1	0
3	LL3_Deck	744	729	-77.5	0	-0.9	0	11.4	0
4	LL3_Deck	744	730	77.5	0	0.9	0	1.9	0
5	LL3_Deck	747	731	-19.8	0	-0.7	0	8.1	0
6	LL3_Deck	747	732	19.8	0	0.7	0	-2.3	0
7	LL3_Deck	750	733	-5.3	0	0.3	0	-0.9	0
8	LL3_Deck	750	734	5.3	0	-0.3	0	-3.7	0
9	LL3_Deck	753	735	-21.7	0	-0.2	0	-0.4	0
10	LL3_Deck	753	736	21.7	0	0.2	0	1.9	0
11	LL3_Deck	756	737	13.1	0	-0.5	0	5.1	0
12	LL3_Deck	756	738	-13.1	0	0.5	0	2.3	0
13	LL3_Deck	759	739	-49.3	0	-2	0	7.2	0
14	LL3_Deck	759	740	49.3	0	2	0	7.2	0
15	LL3_Deck	762	741	52.8	0	-1.1	0	10.3	0
16	LL3_Deck	762	742	-52.8	0	1.1	0	5.2	0
17	LL3_Deck	765	743	-53.2	0	-3.5	0	14.8	0
18	LL3_Deck	765	744	53.2	0	3.5	0	8.3	0
19	LL3_Deck	768	745	84.8	0	-0.5	0	5.7	0
20	LL3_Deck	768	746	-84.8	0	0.5	0	3.2	0
21	LL3_Deck	771	747	1.4	0	3.1	0	-23.7	-0.1
22	LL3_Deck	771	748	-1.4	0	-3.1	0	-16.3	0
1	LL3_Deck Offset	741	727	40.9	-0.1	-0.2	-1.3	3.7	-2
2	LL3_Deck Offset	741	728	-40.9	0.1	0.2	1.3	1.6	-0.7
3	LL3_Deck Offset	744	729	-38.8	-2.7	-0.5	8.6	5.7	-35
4	LL3_Deck Offset	744	730	38.8	2.7	0.5	-8.6	1	-4.9
5	LL3_Deck Offset	747	731	-9.9	-4.8	-0.3	-1.7	4	-46.8
6	LL3_Deck Offset	747	732	9.9	4.8	0.3	1.7	-1.2	5.8
7	LL3_Deck Offset	750	733	-2.6	-1.5	0.2	9.3	-0.5	-25.5
8	LL3_Deck Offset	750	734	2.6	1.5	-0.2	-9.3	-1.9	3.8
9	LL3_Deck Offset	753	735	-10.9	-4	-0.1	1.7	-0.2	-39.2
10	LL3_Deck Offset	753	736	10.9	4	0.1	-1.7	1	8.3
11	LL3_Deck Offset	756	737	6.6	-0.8	-0.3	7.4	2.5	-16.3
12	LL3_Deck Offset	756	738	-6.6	0.8	0.3	-7.4	1.2	5.1
13	LL3_Deck Offset	759	739	-24.6	-2.8	-1	2.5	3.6	-26.4
14	LL3_Deck Offset	759	740	24.6	2.8	1	-2.5	3.6	6.8
15	LL3_Deck Offset	762	741	26.4	0	-0.5	3.4	5.2	-5.5
16	LL3_Deck Offset	762	742	-26.4	0	0.5	-3.4	2.6	5.3
17	LL3_Deck Offset	765	743	-26.6	-0.9	-1.8	0.5	7.4	-8.7
18	LL3_Deck Offset	765	744	26.6	0.9	1.8	-0.5	4.2	3
19	LL3_Deck Offset	768	745	42.5	1	-0.3	-3	2.8	11
20	LL3_Deck Offset	768	746	-42.5	-1	0.3	3	1.6	5.8
21	LL3_Deck Offset	771	747	0.7	-4.5	1.5	-2.2	-11.9	-51.6
22	LL3_Deck Offset	771	748	-0.7	4.5	-1.5	2.2	-8.2	-6.9

Load (Row) Number	User's Load ID	Member ID	Joint ID	Fx (kips)	Fy (kips)	Fz (kips)	Mx (ft*kip)	My (ft*kip)	Mz (ft*kip)
1	LL3_Roof	741	727	13.3	0	0.1	0	-0.9	0
2	LL3_Roof	741	728	-13.3	0	-0.1	0	-1.8	0
3	LL3_Roof	744	729	-3.5	0	-0.1	0	-0.2	0
4	LL3_Roof	744	730	3.5	0	0.1	0	1.1	0
5	LL3_Roof	747	731	3.2	0	0.3	0	-1.1	0
6	LL3_Roof	747	732	-3.2	0	-0.3	0	-1.2	0
7	LL3_Roof	750	733	-3	0	0.1	0	-0.2	0
8	LL3_Roof	750	734	3	0	-0.1	0	-0.7	0
9	LL3_Roof	753	735	2	0	0.1	0	-0.3	0
10	LL3_Roof	753	736	-2	0	-0.1	0	-0.3	0
11	LL3_Roof	756	737	0.6	0	0	0	0.1	0
12	LL3_Roof	756	738	-0.6	0	0	0	-0.2	0
13	LL3_Roof	759	739	-0.7	0	-0.1	0	0.2	0
14	LL3_Roof	759	740	0.7	0	0.1	0	0.4	0
15	LL3_Roof	762	741	4.1	0	-0.1	0	0.8	0
16	LL3_Roof	762	742	-4.1	0	0.1	0	0.4	0
17	LL3_Roof	765	743	-1.7	0	-0.1	0	1	0
18	LL3_Roof	765	744	1.7	0	0.1	0	-0.2	0
19	LL3_Roof	768	745	11.5	0	0	0	1.1	0
20	LL3_Roof	768	746	-11.5	0	0	0	-0.5	0
21	LL3_Roof	771	747	3.6	0	1.8	0	-12.6	0
22	LL3_Roof	771	748	-3.6	0	-1.8	0	-11.1	0
1	TU-	741	727	-241.7	0	-1.2	0	12.5	0
2	TU-	741	728	241.7	0	1.2	0	13.9	0
3	TU-	744	729	69.5	0	-1.6	0	11.5	0
4	TU-	744	730	-69.5	0	1.6	0	11.3	0
5	TU-	747	731	-63.3	0	-3.2	0	16.5	0
6	TU-	747	732	63.3	0	3.2	0	10.7	0
7	TU-	750	733	33.8	0	-0.5	0	1.1	0
8	TU-	750	734	-33.8	0	0.5	0	5.3	0
9	TU-	753	735	-19.8	0	-0.5	0	2.2	0
10	TU-	753	736	19.8	0	0.5	0	1.3	0
11	TU-	756	737	-23.9	0	0.2	0	-4	0
12	TU-	756	738	23.9	0	-0.2	0	0.9	0
13	TU-	759	739	16	0	2.3	0	-7.2	0
14	TU-	759	740	-16	0	-2.3	0	-8.6	0
15	TU-	762	741	-88.5	0	1.3	0	-13.2	0
16	TU-	762	742	88.5	0	-1.3	0	-5.9	0
17	TU-	765	743	47.2	0	5.3	0	-20.3	0
18	TU-	765	744	-47.2	0	-5.3	0	-14.5	0
19	TU-	768	745	-176.6	0	1.9	0	-22.8	0
20	TU-	768	746	176.6	0	-1.9	0	-8.1	0
21	TU-	771	747	-5.2	0	-15.5	0	151.1	0.1
22	TU-	771	748	5.2	0	15.5	0	50.2	0
1	TU+	741	727	241.7	0	1.2	0	-12.5	0
2	TU+	741	728	-241.7	0	-1.2	0	-13.9	0
3	TU+	744	729	-69.5	0	1.6	0	-11.5	0
4	TU+	744	730	69.5	0	-1.6	0	-11.3	0
5	TU+	747	731	63.3	0	3.2	0	-16.5	0
6	TU+	747	732	-63.3	0	-3.2	0	-10.7	0
7	TU+	750	733	-33.8	0	0.5	0	-1.1	0
8	TU+	750	734	33.8	0	-0.5	0	-5.3	0
9	TU+	753	735	19.8	0	0.5	0	-2.2	0
10	TU+	753	736	-19.8	0	-0.5	0	-1.3	0
11	TU+	756	737	23.9	0	-0.2	0	4	0
12	TU+	756	738	-23.9	0	0.2	0	-0.9	0
13	TU+	759	739	-16	0	-2.3	0	7.2	0
14	TU+	759	740	16	0	2.3	0	8.6	0
15	TU+	762	741	88.5	0	-1.3	0	13.2	0
16	TU+	762	742	-88.5	0	1.3	0	5.9	0
17	TU+	765	743	-47.2	0	-5.3	0	20.3	0
18	TU+	765	744	47.2	0	5.3	0	14.5	0
19	TU+	768	745	176.6	0	-1.9	0	22.8	0
20	TU+	768	746	-176.6	0	1.9	0	8.1	0
21	TU+	771	747	5.2	0	15.5	0	-151.1	-0.1
22	TU+	771	748	-5.2	0	-15.5	0	-50.2	0

Load (Row) Number	User's Load ID	Member ID	Joint ID	Fx (kips)	Fy (kips)	Fz (kips)	Mx (ft*kip)	My (ft*kip)	Mz (ft*kip)
1	TU+Temp. Diff.	741	727	377.8	0	1.6	0	-18.9	0
2	TU+Temp. Diff.	741	728	-377.8	0	-1.6	0	-17.5	0
3	TU+Temp. Diff.	744	729	-144.6	0	3.2	0	-22.2	0
4	TU+Temp. Diff.	744	730	144.6	0	-3.2	0	-24.8	0
5	TU+Temp. Diff.	747	731	124.4	0	6.1	0	-30.7	0
6	TU+Temp. Diff.	747	732	-124.4	0	-6.1	0	-21.6	0
7	TU+Temp. Diff.	750	733	-86.8	0	1.2	0	-5	0
8	TU+Temp. Diff.	750	734	86.8	0	-1.2	0	-11.3	0
9	TU+Temp. Diff.	753	735	55.7	0	2	0	-8.8	0
10	TU+Temp. Diff.	753	736	-55.7	0	-2	0	-6.7	0
11	TU+Temp. Diff.	756	737	20.3	0	-0.1	0	5.1	0
12	TU+Temp. Diff.	756	738	-20.3	0	0.1	0	-4.3	0
13	TU+Temp. Diff.	759	739	-13.3	0	-3.3	0	10.1	0
14	TU+Temp. Diff.	759	740	13.3	0	3.3	0	13.4	0
15	TU+Temp. Diff.	762	741	157.9	0	-2.4	0	24.5	0
16	TU+Temp. Diff.	762	742	-157.9	0	2.4	0	9.4	0
17	TU+Temp. Diff.	765	743	-81.2	0	-10	0	38	0
18	TU+Temp. Diff.	765	744	81.2	0	10	0	27.3	0
19	TU+Temp. Diff.	768	745	351.6	0	-3.7	0	45.9	0
20	TU+Temp. Diff.	768	746	-351.6	0	3.7	0	15.4	0
21	TU+Temp. Diff.	771	747	10.6	0	31.5	0	-307.9	-0.1
22	TU+Temp. Diff.	771	748	-10.6	0	-31.5	0	-101.2	0
1	WS_0 DEG_SRVI	741	727	0	-1.7	0	8.5	0	-14.9
2	WS_0 DEG_SRVI	741	728	0	-0.5	0	-8.5	0	1.3
3	WS_0 DEG_SRVI	744	729	0	-0.4	0	-4.3	0	7.3
4	WS_0 DEG_SRVI	744	730	0	1.8	0	4.3	0	-23.3
5	WS_0 DEG_SRVI	747	731	0	-0.4	0	3.1	0	8
6	WS_0 DEG_SRVI	747	732	0	1.3	0	-3.1	0	-15.2
7	WS_0 DEG_SRVI	750	733	0	0.2	0	-3.8	0	7.3
8	WS_0 DEG_SRVI	750	734	0	1.2	0	3.8	0	-14.7
9	WS_0 DEG_SRVI	753	735	0	-0.6	0	1.8	0	7.5
10	WS_0 DEG_SRVI	753	736	0	1.4	0	-1.8	0	-15.3
11	WS_0 DEG_SRVI	756	737	0	0.6	0	-5	0	9.9
12	WS_0 DEG_SRVI	756	738	0	0.9	0	5	0	-12.2
13	WS_0 DEG_SRVI	759	739	0	-0.4	0	0.1	0	12.2
14	WS_0 DEG_SRVI	759	740	0	1.1	0	-0.1	0	-17.5
15	WS_0 DEG_SRVI	762	741	-0.1	1	0	-7.9	0	15
16	WS_0 DEG_SRVI	762	742	0.1	0.5	0	7.9	0	-11.5
17	WS_0 DEG_SRVI	765	743	0.1	0.5	0	-2.8	0	21.5
18	WS_0 DEG_SRVI	765	744	-0.1	0.2	0	2.8	0	-20.6
19	WS_0 DEG_SRVI	768	745	-0.2	1.8	0	-12.3	0	26.5
20	WS_0 DEG_SRVI	768	746	0.2	-0.1	0	12.3	0	-10.9
21	WS_0 DEG_SRVI	771	747	0	-5.7	0	9.3	0.2	-81.4
22	WS_0 DEG_SRVI	771	748	0	4.4	0	-9.3	0.1	15.9
1	WS_15 DEG_SRVI	741	727	-8.4	-1.5	-0.2	8	4.8	-13.6
2	WS_15 DEG_SRVI	741	728	8.1	-0.4	0.4	-8	2.5	0.9
3	WS_15 DEG_SRVI	744	729	5.1	-0.5	-0.3	-4.1	1.9	6.8
4	WS_15 DEG_SRVI	744	730	-5	1.7	0.1	4.1	0.8	-22.1
5	WS_15 DEG_SRVI	747	731	-6.4	-0.5	-0.5	3	2.4	7.3
6	WS_15 DEG_SRVI	747	732	6.4	1.2	0.4	-3	1.4	-14.6
7	WS_15 DEG_SRVI	750	733	10	0.1	-0.2	-3.5	0.8	6.6
8	WS_15 DEG_SRVI	750	734	-9.8	1.1	0	3.5	0.4	-14.1
9	WS_15 DEG_SRVI	753	735	-5.8	-0.7	-0.4	1.8	1.5	6.7
10	WS_15 DEG_SRVI	753	736	5.8	1.4	0.3	-1.8	1.4	-14.7
11	WS_15 DEG_SRVI	756	737	10.4	0.4	-0.2	-4.6	1.2	8.9
12	WS_15 DEG_SRVI	756	738	-10.2	0.8	0.1	4.6	0.7	-11.8
13	WS_15 DEG_SRVI	759	739	-7.3	-0.5	-0.6	0.3	1.9	10.8
14	WS_15 DEG_SRVI	759	740	7.3	1.1	0.5	-0.3	1.6	-16.7
15	WS_15 DEG_SRVI	762	741	11.5	0.8	-0.2	-7.1	1.4	13.4
16	WS_15 DEG_SRVI	762	742	-11.4	0.4	0.1	7.1	0.9	-11.1
17	WS_15 DEG_SRVI	765	743	-7.4	0.2	-0.5	-2.3	2.1	19.1
18	WS_15 DEG_SRVI	765	744	7.4	0.3	0.4	2.3	1	-19.4
19	WS_15 DEG_SRVI	768	745	13.5	1.5	-0.2	-11.1	1.8	23.5
20	WS_15 DEG_SRVI	768	746	-13.3	-0.1	0.1	11.1	0.4	-10.6
21	WS_15 DEG_SRVI	771	747	0.4	-4.9	1.3	8.8	-11.4	-71.4
22	WS_15 DEG_SRVI	771	748	-0.4	3.8	-1.1	-8.8	-4	15.4

Load (Row) Number	User's Load ID	Member ID	Joint ID	Fx (kips)	Fy (kips)	Fz (kips)	Mx (ft*kip)	My (ft*kip)	Mz (ft*kip)
1	WS_-15 DEG_SRVI	741	727	8.3	-1.5	0.2	8	-4.7	-13.6
2	WS_-15 DEG_SRVI	741	728	-8	-0.4	-0.4	-8	-2.4	0.9
3	WS_-15 DEG_SRVI	744	729	-5	-0.5	0.3	-4.1	-1.9	6.8
4	WS_-15 DEG_SRVI	744	730	4.9	1.7	-0.1	4.1	-0.7	-22.1
5	WS_-15 DEG_SRVI	747	731	6.3	-0.5	0.5	3	-2.4	7.3
6	WS_-15 DEG_SRVI	747	732	-6.3	1.2	-0.4	-3	-1.4	-14.6
7	WS_-15 DEG_SRVI	750	733	-9.9	0.1	0.2	-3.5	-0.8	6.6
8	WS_-15 DEG_SRVI	750	734	9.8	1.1	0	3.5	-0.4	-14.1
9	WS_-15 DEG_SRVI	753	735	5.8	-0.7	0.4	1.8	-1.5	6.7
10	WS_-15 DEG_SRVI	753	736	-5.8	1.4	-0.3	-1.8	-1.4	-14.7
11	WS_-15 DEG_SRVI	756	737	-10.4	0.4	0.2	-4.6	-1.2	8.9
12	WS_-15 DEG_SRVI	756	738	10.3	0.8	-0.1	4.6	-0.7	-11.8
13	WS_-15 DEG_SRVI	759	739	7.3	-0.5	0.6	0.3	-1.9	10.8
14	WS_-15 DEG_SRVI	759	740	-7.4	1.1	-0.5	-0.3	-1.7	-16.7
15	WS_-15 DEG_SRVI	762	741	-11.7	0.8	0.2	-7.1	-1.4	13.4
16	WS_-15 DEG_SRVI	762	742	11.5	0.4	-0.1	7.1	-0.9	-11.1
17	WS_-15 DEG_SRVI	765	743	7.5	0.2	0.5	-2.3	-2.1	19.1
18	WS_-15 DEG_SRVI	765	744	-7.5	0.3	-0.4	2.3	-1.1	-19.4
19	WS_-15 DEG_SRVI	768	745	-13.8	1.5	0.2	-11.1	-1.8	23.5
20	WS_-15 DEG_SRVI	768	746	13.6	-0.1	-0.1	11.1	-0.4	-10.6
21	WS_-15 DEG_SRVI	771	747	-0.4	-4.9	-1.3	8.8	11.8	-71.4
22	WS_-15 DEG_SRVI	771	748	0.4	3.8	1.1	-8.8	4.1	15.4
1	WS_30 DEG_SRVI	741	727	-19.1	-1.4	-0.5	7.2	10.7	-12.4
2	WS_30 DEG_SRVI	741	728	18.5	-0.4	0.9	-7.2	5.6	0.8
3	WS_30 DEG_SRVI	744	729	11.3	-0.4	-0.6	-3.5	4.4	5.9
4	WS_30 DEG_SRVI	744	730	-11	1.6	0.2	3.5	1.7	-20.1
5	WS_30 DEG_SRVI	747	731	-14.2	-0.5	-1.1	2.8	5.3	6.1
6	WS_30 DEG_SRVI	747	732	14.2	1.1	0.8	-2.8	3.1	-12.9
7	WS_30 DEG_SRVI	750	733	22.1	0.1	-0.4	-3.1	1.8	5.8
8	WS_30 DEG_SRVI	750	734	-21.8	1.1	0	3.1	0.8	-12.8
9	WS_30 DEG_SRVI	753	735	-12.7	-0.7	-1	1.8	3.3	5.6
10	WS_30 DEG_SRVI	753	736	12.8	1.3	0.7	-1.8	3.2	-13
11	WS_30 DEG_SRVI	756	737	22.9	0.4	-0.5	-4	2.7	8
12	WS_30 DEG_SRVI	756	738	-22.6	0.8	0.1	4	1.6	-10.6
13	WS_30 DEG_SRVI	759	739	-16.1	-0.5	-1.2	0.4	4.2	9.5
14	WS_30 DEG_SRVI	759	740	16.2	1.1	1	-0.4	3.7	-14.9
15	WS_30 DEG_SRVI	762	741	25.5	0.7	-0.5	-6.4	3.1	12.1
16	WS_30 DEG_SRVI	762	742	-25.1	0.4	0.2	6.4	1.9	-10
17	WS_30 DEG_SRVI	765	743	-16.3	0.2	-1.2	-2	4.5	17.2
18	WS_30 DEG_SRVI	765	744	16.4	0.3	1	2	2.3	-17.4
19	WS_30 DEG_SRVI	768	745	29.8	1.4	-0.5	-10.1	3.9	21.5
20	WS_30 DEG_SRVI	768	746	-29.3	-0.1	0.1	10.1	0.9	-9.5
21	WS_30 DEG_SRVI	771	747	0.9	-4.5	2.8	8.1	-25.2	-65
22	WS_30 DEG_SRVI	771	748	-0.9	3.4	-2.4	-8.1	-8.7	13.9
1	WS_-30 DEG_SRVI	741	727	19.1	-1.4	0.5	7.2	-10.7	-12.4
2	WS_-30 DEG_SRVI	741	728	-18.4	-0.4	-0.9	-7.2	-5.6	0.8
3	WS_-30 DEG_SRVI	744	729	-11.2	-0.4	0.6	-3.5	-4.4	5.9
4	WS_-30 DEG_SRVI	744	730	10.9	1.6	-0.2	3.5	-1.6	-20.1
5	WS_-30 DEG_SRVI	747	731	14.2	-0.5	1.1	2.8	-5.3	6.1
6	WS_-30 DEG_SRVI	747	732	-14.2	1.1	-0.8	-2.8	-3.1	-12.9
7	WS_-30 DEG_SRVI	750	733	-22.1	0.1	0.4	-3.1	-1.8	5.8
8	WS_-30 DEG_SRVI	750	734	21.8	1.1	0	3.1	-0.8	-12.8
9	WS_-30 DEG_SRVI	753	735	12.7	-0.7	1	1.8	-3.3	5.6
10	WS_-30 DEG_SRVI	753	736	-12.8	1.3	-0.7	-1.8	-3.2	-13
11	WS_-30 DEG_SRVI	756	737	-23	0.4	0.5	-4	-2.7	8
12	WS_-30 DEG_SRVI	756	738	22.7	0.8	-0.1	4	-1.6	-10.6
13	WS_-30 DEG_SRVI	759	739	16.2	-0.5	1.2	0.4	-4.2	9.5
14	WS_-30 DEG_SRVI	759	740	-16.2	1.1	-1	-0.4	-3.7	-14.9
15	WS_-30 DEG_SRVI	762	741	-25.6	0.7	0.5	-6.4	-3.1	12.1
16	WS_-30 DEG_SRVI	762	742	25.3	0.4	-0.2	6.4	-2	-10
17	WS_-30 DEG_SRVI	765	743	16.4	0.2	1.2	-2	-4.6	17.2
18	WS_-30 DEG_SRVI	765	744	-16.5	0.3	-1	2	-2.4	-17.4
19	WS_-30 DEG_SRVI	768	745	-30.1	1.4	0.5	-10.1	-4	21.5
20	WS_-30 DEG_SRVI	768	746	29.7	-0.1	-0.1	10.1	-0.9	-9.5
21	WS_-30 DEG_SRVI	771	747	-0.9	-4.5	-2.9	8.1	25.5	-64.9
22	WS_-30 DEG_SRVI	771	748	0.9	3.4	2.4	-8.1	8.8	13.9

Load (Row) Number	User's Load ID	Member ID	Joint ID	Fx (kips)	Fy (kips)	Fz (kips)	Mx (ft*kip)	My (ft*kip)	Mz (ft*kip)
1	WS_45 DEG_SRVI	741	727	-28.2	-1.1	-0.8	6	15.7	-9.9
2	WS_45 DEG_SRVI	741	728	27.3	-0.3	1.4	-6	8.2	0.7
3	WS_45 DEG_SRVI	744	729	16.4	-0.3	-0.9	-3.3	6.4	5.6
4	WS_45 DEG_SRVI	744	730	-16	1.1	0.3	3.3	2.4	-16
5	WS_45 DEG_SRVI	747	731	-20.8	-0.3	-1.7	2.1	7.8	6.4
6	WS_45 DEG_SRVI	747	732	20.8	0.8	1.2	-2.1	4.5	-11.1
7	WS_45 DEG_SRVI	750	733	32.1	0	-0.5	-2.9	2.7	5.3
8	WS_45 DEG_SRVI	750	734	-31.6	0.8	0	2.9	1.2	-10.3
9	WS_45 DEG_SRVI	753	735	-18.4	-0.5	-1.4	1.1	4.7	5.8
10	WS_45 DEG_SRVI	753	736	18.5	0.9	1	-1.1	4.7	-11.2
11	WS_45 DEG_SRVI	756	737	33.1	0.3	-0.7	-3.6	3.9	6.8
12	WS_45 DEG_SRVI	756	738	-32.5	0.5	0.2	3.6	2.3	-8.6
13	WS_45 DEG_SRVI	759	739	-23.2	-0.4	-1.8	-0.1	6	8.6
14	WS_45 DEG_SRVI	759	740	23.3	0.8	1.5	0.1	5.3	-12.6
15	WS_45 DEG_SRVI	762	741	36.7	0.5	-0.7	-5.4	4.5	9.9
16	WS_45 DEG_SRVI	762	742	-36.1	0.3	0.3	5.4	2.8	-8.2
17	WS_45 DEG_SRVI	765	743	-23.5	0.2	-1.7	-1.9	6.5	14.3
18	WS_45 DEG_SRVI	765	744	23.6	0.2	1.4	1.9	3.5	-14.5
19	WS_45 DEG_SRVI	768	745	42.8	1	-0.7	-8.2	5.7	16.9
20	WS_45 DEG_SRVI	768	746	-42.1	-0.1	0.2	8.2	1.3	-7.8
21	WS_45 DEG_SRVI	771	747	1.3	-3.5	4.1	6.2	-36.1	-52
22	WS_45 DEG_SRVI	771	748	-1.3	2.8	-3.4	-6.2	-12.4	11.3
1	WS_-45 DEG_SRVI	741	727	28.2	-1.1	0.7	6	-15.7	-9.9
2	WS_-45 DEG_SRVI	741	728	-27.2	-0.3	-1.4	-6	-8.2	0.7
3	WS_-45 DEG_SRVI	744	729	-16.4	-0.3	0.9	-3.3	-6.4	5.6
4	WS_-45 DEG_SRVI	744	730	15.9	1.1	-0.3	3.3	-2.4	-16
5	WS_-45 DEG_SRVI	747	731	20.8	-0.3	1.7	2.1	-7.8	6.4
6	WS_-45 DEG_SRVI	747	732	-20.8	0.8	-1.2	-2.1	-4.5	-11.1
7	WS_-45 DEG_SRVI	750	733	-32.1	0	0.5	-2.9	-2.7	5.3
8	WS_-45 DEG_SRVI	750	734	31.6	0.8	0	2.9	-1.2	-10.3
9	WS_-45 DEG_SRVI	753	735	18.4	-0.5	1.4	1.1	-4.7	5.8
10	WS_-45 DEG_SRVI	753	736	-18.5	0.9	-1	-1.1	-4.7	-11.2
11	WS_-45 DEG_SRVI	756	737	-33.1	0.3	0.7	-3.6	-3.9	6.8
12	WS_-45 DEG_SRVI	756	738	32.6	0.5	-0.2	3.6	-2.3	-8.6
13	WS_-45 DEG_SRVI	759	739	23.2	-0.4	1.8	-0.1	-6	8.6
14	WS_-45 DEG_SRVI	759	740	-23.3	0.8	-1.5	0.1	-5.3	-12.6
15	WS_-45 DEG_SRVI	762	741	-36.8	0.5	0.7	-5.4	-4.5	9.8
16	WS_-45 DEG_SRVI	762	742	36.2	0.3	-0.3	5.4	-2.8	-8.2
17	WS_-45 DEG_SRVI	765	743	23.6	0.2	1.7	-1.9	-6.5	14.3
18	WS_-45 DEG_SRVI	765	744	-23.7	0.2	-1.4	1.9	-3.5	-14.5
19	WS_-45 DEG_SRVI	768	745	-43	1	0.7	-8.2	-5.7	16.9
20	WS_-45 DEG_SRVI	768	746	42.4	-0.1	-0.2	8.2	-1.3	-7.8
21	WS_-45 DEG_SRVI	771	747	-1.3	-3.5	-4.1	6.2	36.3	-51.9
22	WS_-45 DEG_SRVI	771	748	1.3	2.8	3.4	-6.2	12.4	11.3
1	WS_60 DEG_SRVI	741	727	-33.9	-0.6	-0.9	4.6	18.9	-6.7
2	WS_60 DEG_SRVI	741	728	32.8	-0.1	1.6	-4.6	9.9	0.7
3	WS_60 DEG_SRVI	744	729	19.8	-0.2	-1.1	-2.9	7.7	5
4	WS_60 DEG_SRVI	744	730	-19.2	0.6	0.4	2.9	2.9	-10.7
5	WS_60 DEG_SRVI	747	731	-25	-0.1	-2	1.2	9.3	6.5
6	WS_60 DEG_SRVI	747	732	25	0.4	1.5	-1.2	5.4	-8.5
7	WS_60 DEG_SRVI	750	733	38.7	0	-0.6	-2.6	3.2	4.4
8	WS_60 DEG_SRVI	750	734	-38.1	0.4	0	2.6	1.4	-7.1
9	WS_60 DEG_SRVI	753	735	-22.2	-0.3	-1.7	0.4	5.7	5.8
10	WS_60 DEG_SRVI	753	736	22.3	0.5	1.3	-0.4	5.6	-8.6
11	WS_60 DEG_SRVI	756	737	39.9	0.2	-0.8	-3	4.7	5.2
12	WS_60 DEG_SRVI	756	738	-39.3	0.3	0.2	3	2.8	-6.1
13	WS_60 DEG_SRVI	759	739	-28	-0.2	-2.2	-0.5	7.2	7.2
14	WS_60 DEG_SRVI	759	740	28.1	0.4	1.8	0.5	6.4	-9.6
15	WS_60 DEG_SRVI	762	741	44.3	0.3	-0.9	-4.1	5.4	6.9
16	WS_60 DEG_SRVI	762	742	-43.6	0.1	0.3	4.1	3.4	-5.8
17	WS_60 DEG_SRVI	765	743	-28.4	0.1	-2	-1.7	7.9	10.6
18	WS_60 DEG_SRVI	765	744	28.5	0.1	1.7	1.7	4.2	-10.7
19	WS_60 DEG_SRVI	768	745	51.7	0.6	-0.8	-5.8	6.8	11.1
20	WS_60 DEG_SRVI	768	746	-50.9	-0.1	0.2	5.8	1.6	-5.6
21	WS_60 DEG_SRVI	771	747	1.6	-2.3	4.9	3.9	-43.6	-35.6
22	WS_60 DEG_SRVI	771	748	-1.6	1.9	-4.1	-3.9	-15	7.9

Load (Row) Number	User's Load ID	Member ID	Joint ID	Fx (kips)	Fy (kips)	Fz (kips)	Mx (ft*kip)	My (ft*kip)	Mz (ft*kip)
1	WS_-60 DEG_SRVI	741	727	33.9	-0.6	0.9	4.6	-18.9	-6.7
2	WS_-60 DEG_SRVI	741	728	-32.8	-0.1	-1.6	-4.6	-9.9	0.7
3	WS_-60 DEG_SRVI	744	729	-19.8	-0.2	1.1	-2.9	-7.7	5
4	WS_-60 DEG_SRVI	744	730	19.2	0.6	-0.4	2.9	-2.9	-10.7
5	WS_-60 DEG_SRVI	747	731	25	-0.1	2	1.2	-9.3	6.5
6	WS_-60 DEG_SRVI	747	732	-25	0.4	-1.5	-1.2	-5.4	-8.5
7	WS_-60 DEG_SRVI	750	733	-38.7	0	0.6	-2.6	-3.2	4.4
8	WS_-60 DEG_SRVI	750	734	38.1	0.4	0	2.6	-1.4	-7.1
9	WS_-60 DEG_SRVI	753	735	22.2	-0.3	1.7	0.4	-5.7	5.7
10	WS_-60 DEG_SRVI	753	736	-22.3	0.5	-1.3	-0.4	-5.6	-8.6
11	WS_-60 DEG_SRVI	756	737	-39.9	0.2	0.8	-3	-4.7	5.2
12	WS_-60 DEG_SRVI	756	738	39.3	0.3	-0.2	3	-2.8	-6.1
13	WS_-60 DEG_SRVI	759	739	28	-0.2	2.2	-0.5	-7.2	7.2
14	WS_-60 DEG_SRVI	759	740	-28.1	0.4	-1.8	0.5	-6.4	-9.5
15	WS_-60 DEG_SRVI	762	741	-44.3	0.3	0.9	-4.1	-5.4	6.9
16	WS_-60 DEG_SRVI	762	742	43.6	0.1	-0.3	4.1	-3.4	-5.8
17	WS_-60 DEG_SRVI	765	743	28.4	0.1	2	-1.7	-7.9	10.6
18	WS_-60 DEG_SRVI	765	744	-28.5	0.1	-1.7	1.7	-4.2	-10.7
19	WS_-60 DEG_SRVI	768	745	-51.8	0.6	0.8	-5.8	-6.9	11.1
20	WS_-60 DEG_SRVI	768	746	51	-0.1	-0.2	5.8	-1.6	-5.6
21	WS_-60 DEG_SRVI	771	747	-1.6	-2.3	-4.9	3.9	43.7	-35.5
22	WS_-60 DEG_SRVI	771	748	1.6	1.9	4.1	-3.9	15	7.9

AASHTO Limit State: SRV 3 - SERVICE III													
Max/ Min ID	Load Num	Member Num	Joint Num	Limit State/ Combo ID	Fx (kips)	Fy (kips)	Fz (kips)	Mx (ft*kip)	My (ft*kip)	Mz (ft*kip)	Mxy (ft*kip)	Mxz (ft*kip)	Myz (ft*kip)
Max Fx	1	741	727	SRV 3/ 25	1314.7	0.0	4.8	0.0	9.3	0.0	9.3	0.0	9.3
Max Fy	6	747	732	SRV 3/ 2	-113.3	4.4	-13.6	-0.1	-77.6	3.8	77.6	3.8	77.7
Max Fz	21	771	747	SRV 3/ 52	74.3	0.0	97.7	-0.1	-626.5	-0.5	626.5	0.5	626.5
Max Mx	7	750	733	SRV 3/ 2	-310.4	-1.6	7.9	8.5	-30.8	-22.3	31.9	23.9	38.0
Max My	21	771	747	SRV 3/ 4	46.3	0.0	16.3	-0.1	182.7	0.0	182.7	0.1	182.7
Max Mz	21	771	747	SRV 3/ 5	47.8	2.2	21.4	1.1	132.5	26.5	132.5	26.5	135.1
Max Mxy	22	771	748	SRV 3/ 52	-64.1	0.0	-97.7	0.1	-640.7	-0.1	640.7	0.1	640.7
Max Mxz	21	771	747	SRV 3/ 44	68.4	-3.6	80.4	-1.9	-460.2	-41.7	460.2	41.7	462.1
Max Myz	22	771	748	SRV 3/ 52	-64.1	0.0	-97.7	0.1	-640.7	-0.1	640.7	0.1	640.7
Min Fx	2	741	728	SRV 3/ 25	-1308.3	0.0	5.3	0.0	-4.1	0.0	4.1	0.0	4.1
Min Fy	5	747	731	SRV 3/ 2	117.8	-4.4	13.8	0.1	-39.6	-41.5	39.6	41.5	57.4
Min Fz	22	771	748	SRV 3/ 52	-64.1	0.0	-97.7	0.1	-640.7	-0.1	640.7	0.1	640.7
Min Mx	8	750	734	SRV 3/ 2	315.7	1.6	-2.7	-8.5	-44.3	0.0	45.1	8.5	44.3
Min My	22	771	748	SRV 3/ 52	-64.1	0.0	-97.7	0.1	-640.7	-0.1	640.7	0.1	640.7
Min Mz	21	771	747	SRV 3/ 44	68.4	-3.6	80.4	-1.9	-460.2	-41.7	460.2	41.7	462.1
Min Mxy	11	756	737	SRV 3/ 27	-167.8	0.0	4.7	0.0	0.1	0.0	0.1	0.0	0.1
Min Mxz	1	741	727	SRV 3/ 1	658.6	0.0	1.8	0.0	42.1	0.0	42.1	0.0	42.1
Min Myz	11	756	737	SRV 3/ 27	-167.8	0.0	4.7	0.0	0.1	0.0	0.1	0.0	0.1

AASHTO Limit State: SRV 3 - SERVICE III

	Max/ Min ID	Combo ID	Fx (kips)	Fy (kips)	Fz (kips)	Mx (ft*kip)	My (ft*kip)	Mz (ft*kip)	Mxy (ft*kip)	Mxz (ft*kip)	Myz (ft*kip)
	Max Fx	SRV 3/ 25	1314.7	0.0	4.8	0.0	9.3	0.0	9.3	0.0	9.3
	Max Fy	SRV 3/ 1	658.6	0.0	1.8	0.0	42.1	0.0	42.1	0.0	42.1
	Max Fz	SRV 3/ 21	1255.0	0.0	5.3	0.0	2.9	0.0	2.9	0.0	2.9
	Max Mx	SRV 3/ 1	658.6	0.0	1.8	0.0	42.1	0.0	42.1	0.0	42.1
	Max My	SRV 3/ 28	617.6	0.0	1.6	0.0	44.8	0.0	44.8	0.0	44.8
Load No.	Max Mz	SRV 3/ 5	611.4	0.0	2.3	-0.4	35.4	2.1	35.4	2.1	35.5
1	Max Mxy	SRV 3/ 28	617.6	0.0	1.6	0.0	44.8	0.0	44.8	0.0	44.8
	Max Mxz	SRV 3/ 5	611.4	0.0	2.3	-0.4	35.4	2.1	35.4	2.1	35.5
Member	Max Myz	SRV 3/ 28	617.6	0.0	1.6	0.0	44.8	0.0	44.8	0.0	44.8
741	Min Fx	SRV 3/ 31	552.1	0.0	2.0	0.0	38.8	0.0	38.8	0.0	38.8
	Min Fy	SRV 3/ 2	644.1	-0.1	2.2	-1.4	38.4	0.5	38.4	1.4	38.4
Joint	Min Fz	SRV 3/ 28	617.6	0.0	1.6	0.0	44.8	0.0	44.8	0.0	44.8
727	Min Mx	SRV 3/ 2	644.1	-0.1	2.2	-1.4	38.4	0.5	38.4	1.4	38.4
	Min My	SRV 3/ 27	1259.8	0.0	5.3	0.0	2.6	0.0	2.6	0.0	2.6
	Min Mz	SRV 3/ 8	662.4	-0.1	2.2	-1.0	37.7	-1.6	37.7	1.9	37.7
	Min Mxy	SRV 3/ 27	1259.8	0.0	5.3	0.0	2.6	0.0	2.6	0.0	2.6
	Min Mxz	SRV 3/ 1	658.6	0.0	1.8	0.0	42.1	0.0	42.1	0.0	42.1
	Min Myz	SRV 3/ 27	1259.8	0.0	5.3	0.0	2.6	0.0	2.6	0.0	2.6
	Max Fx	SRV 3/ 31	-545.7	0.0	8.1	0.0	29.8	0.0	29.8	0.0	29.8
	Max Fy	SRV 3/ 2	-637.7	0.1	7.9	1.4	27.4	-2.2	27.5	2.6	27.5
	Max Fz	SRV 3/ 28	-611.2	0.0	8.5	0.0	32.3	0.0	32.3	0.0	32.3
	Max Mx	SRV 3/ 2	-637.7	0.1	7.9	1.4	27.4	-2.2	27.5	2.6	27.5
	Max My	SRV 3/ 28	-611.2	0.0	8.5	0.0	32.3	0.0	32.3	0.0	32.3
Load No.	Max Mz	SRV 3/ 1	-652.2	0.0	8.3	0.0	30.0	0.0	30.0	0.0	30.0
2	Max Mxy	SRV 3/ 28	-611.2	0.0	8.5	0.0	32.3	0.0	32.3	0.0	32.3
	Max Mxz	SRV 3/ 2	-637.7	0.1	7.9	1.4	27.4	-2.2	27.5	2.6	27.5
Member	Max Myz	SRV 3/ 28	-611.2	0.0	8.5	0.0	32.3	0.0	32.3	0.0	32.3
741	Min Fx	SRV 3/ 25	-1308.3	0.0	5.3	0.0	-4.1	0.0	4.1	0.0	4.1
	Min Fy	SRV 3/ 1	-652.2	0.0	8.3	0.0	30.0	0.0	30.0	0.0	30.0
Joint	Min Fz	SRV 3/ 21	-1248.6	0.0	4.8	0.0	-7.6	0.0	7.6	0.0	7.6
728	Min Mx	SRV 3/ 1	-652.2	0.0	8.3	0.0	30.0	0.0	30.0	0.0	30.0
	Min My	SRV 3/ 27	-1253.4	0.0	4.8	0.0	-8.0	0.0	8.0	0.0	8.0
	Min Mz	SRV 3/ 2	-637.7	0.1	7.9	1.4	27.4	-2.2	27.5	2.6	27.5
	Min Mxy	SRV 3/ 13	-1070.1	0.0	5.5	0.0	-0.3	0.0	0.3	0.0	0.3
	Min Mxz	SRV 3/ 1	-652.2	0.0	8.3	0.0	30.0	0.0	30.0	0.0	30.0
	Min Myz	SRV 3/ 13	-1070.1	0.0	5.5	0.0	-0.3	0.0	0.3	0.0	0.3

AASHTO Limit State: SRV 3 - SERVICE III

	Max/ Min ID	Combo ID	Fx (kips)	Fy (kips)	Fz (kips)	Mx (ft*kip)	My (ft*kip)	Mz (ft*kip)	Mxy (ft*kip)	Mxz (ft*kip)	Myz (ft*kip)
	Max Fx	SRV 3/ 6	-493.5	0.0	1.2	0.0	16.2	0.0	16.2	0.0	16.2
	Max Fy	SRV 3/ 1	-558.7	0.0	0.4	0.0	24.9	0.0	24.9	0.0	24.9
	Max Fz	SRV 3/ 23	-709.1	-0.5	6.0	0.9	-17.7	-1.5	17.8	1.8	17.8
	Max Mx	SRV 3/ 2	-525.9	-2.7	0.8	7.8	20.5	-29.5	21.9	30.5	36.0
	Max My	SRV 3/ 7	-555.2	0.0	0.5	0.0	25.3	0.0	25.3	0.0	25.3
Load No.	Max Mz	SRV 3/ 1	-558.7	0.0	0.4	0.0	24.9	0.0	24.9	0.0	24.9
3	Max Mxy	SRV 3/ 7	-555.2	0.0	0.5	0.0	25.3	0.0	25.3	0.0	25.3
	Max Mxz	SRV 3/ 2	-525.9	-2.7	0.8	7.8	20.5	-29.5	21.9	30.5	36.0
Member	Max Myz	SRV 3/ 2	-525.9	-2.7	0.8	7.8	20.5	-29.5	21.9	30.5	36.0
744	Min Fx	SRV 3/ 46	-796.2	0.0	5.2	0.0	-9.6	0.0	9.6	0.0	9.6
	Min Fy	SRV 3/ 2	-525.9	-2.7	0.8	7.8	20.5	-29.5	21.9	30.5	36.0
Joint	Min Fz	SRV 3/ 1	-558.7	0.0	0.4	0.0	24.9	0.0	24.9	0.0	24.9
729	Min Mx	SRV 3/ 1	-558.7	0.0	0.4	0.0	24.9	0.0	24.9	0.0	24.9
	Min My	SRV 3/ 49	-734.1	0.0	5.9	0.0	-18.7	0.0	18.7	0.0	18.7
	Min Mz	SRV 3/ 2	-525.9	-2.7	0.8	7.8	20.5	-29.5	21.9	30.5	36.0
	Min Mxy	SRV 3/ 37	-721.1	0.0	3.6	0.0	1.1	0.0	1.1	0.0	1.1
	Min Mxz	SRV 3/ 1	-558.7	0.0	0.4	0.0	24.9	0.0	24.9	0.0	24.9
	Min Myz	SRV 3/ 37	-721.1	0.0	3.6	0.0	1.1	0.0	1.1	0.0	1.1
	Max Fx	SRV 3/ 46	802.2	0.0	-0.4	0.0	-31.6	0.0	31.6	0.0	31.6
	Max Fy	SRV 3/ 2	531.9	2.7	4.0	-7.8	2.0	-9.5	8.0	12.3	9.7
	Max Fz	SRV 3/ 1	564.7	0.0	4.4	0.0	3.6	0.0	3.6	0.0	3.6
	Max Mx	SRV 3/ 1	564.7	0.0	4.4	0.0	3.6	0.0	3.6	0.0	3.6
	Max My	SRV 3/ 28	588.1	0.0	4.4	0.0	4.5	0.0	4.5	0.0	4.5
Load No.	Max Mz	SRV 3/ 1	564.7	0.0	4.4	0.0	3.6	0.0	3.6	0.0	3.6
4	Max Mxy	SRV 3/ 26	744.3	2.2	-0.8	-6.9	-34.8	-3.9	35.5	7.9	35.0
	Max Mxz	SRV 3/ 2	531.9	2.7	4.0	-7.8	2.0	-9.5	8.0	12.3	9.7
Member	Max Myz	SRV 3/ 20	746.0	2.7	-0.8	-7.8	-34.1	-9.5	35.0	12.3	35.4
744	Min Fx	SRV 3/ 6	499.5	0.0	3.6	0.0	0.7	0.0	0.7	0.0	0.7
	Min Fy	SRV 3/ 1	564.7	0.0	4.4	0.0	3.6	0.0	3.6	0.0	3.6
Joint	Min Fz	SRV 3/ 23	715.1	0.5	-1.2	-0.9	-34.8	-5.6	34.8	5.7	35.2
730	Min Mx	SRV 3/ 2	531.9	2.7	4.0	-7.8	2.0	-9.5	8.0	12.3	9.7
	Min My	SRV 3/ 24	713.6	0.0	-1.2	0.0	-35.4	0.0	35.4	0.0	35.4
	Min Mz	SRV 3/ 2	531.9	2.7	4.0	-7.8	2.0	-9.5	8.0	12.3	9.7
	Min Mxy	SRV 3/ 6	499.5	0.0	3.6	0.0	0.7	0.0	0.7	0.0	0.7
	Min Mxz	SRV 3/ 1	564.7	0.0	4.4	0.0	3.6	0.0	3.6	0.0	3.6
	Min Myz	SRV 3/ 6	499.5	0.0	3.6	0.0	0.7	0.0	0.7	0.0	0.7

AASHTO Limit State: SRV 3 - SERVICE III

	Max/ Min ID	Combo ID	Fx (kips)	Fy (kips)	Fz (kips)	Mx (ft*kip)	My (ft*kip)	Mz (ft*kip)	Mxy (ft*kip)	Mxz (ft*kip)	Myz (ft*kip)
	Max Fx	SRV 3/ 54	329.6	0.0	24.5	0.0	-93.9	0.0	93.9	0.0	93.9
	Max Fy	SRV 3/ 1	110.2	0.0	13.7	0.0	-36.8	0.0	36.8	0.0	36.8
	Max Fz	SRV 3/ 49	327.7	0.0	24.6	0.0	-93.9	0.0	93.9	0.0	93.9
	Max Mx	SRV 3/ 5	125.6	-0.6	14.1	1.4	-42.8	-4.1	42.8	4.3	43.0
	Max My	SRV 3/ 7	109.5	0.0	13.3	0.0	-35.9	0.0	35.9	0.0	35.9
Load No.	Max Mz	SRV 3/ 1	110.2	0.0	13.7	0.0	-36.8	0.0	36.8	0.0	36.8
5	Max Mxy	SRV 3/ 48	329.4	0.0	24.5	0.0	-94.0	0.0	94.0	0.0	94.0
	Max Mxz	SRV 3/ 2	117.8	-4.4	13.8	0.1	-39.6	-41.5	39.6	41.5	57.4
Member	Max Myz	SRV 3/ 47	319.5	-4.4	24.2	0.1	-90.2	-41.5	90.2	41.5	99.3
747	Min Fx	SRV 3/ 7	109.5	0.0	13.3	0.0	-35.9	0.0	35.9	0.0	35.9
	Min Fy	SRV 3/ 2	117.8	-4.4	13.8	0.1	-39.6	-41.5	39.6	41.5	57.4
Joint	Min Fz	SRV 3/ 7	109.5	0.0	13.3	0.0	-35.9	0.0	35.9	0.0	35.9
731	Min Mx	SRV 3/ 8	117.4	-3.8	13.7	-1.4	-39.2	-37.4	39.2	37.5	54.2
	Min My	SRV 3/ 48	329.4	0.0	24.5	0.0	-94.0	0.0	94.0	0.0	94.0
	Min Mz	SRV 3/ 2	117.8	-4.4	13.8	0.1	-39.6	-41.5	39.6	41.5	57.4
	Min Mxy	SRV 3/ 7	109.5	0.0	13.3	0.0	-35.9	0.0	35.9	0.0	35.9
	Min Mxz	SRV 3/ 1	110.2	0.0	13.7	0.0	-36.8	0.0	36.8	0.0	36.8
	Min Myz	SRV 3/ 7	109.5	0.0	13.3	0.0	-35.9	0.0	35.9	0.0	35.9
	Max Fx	SRV 3/ 7	-105.0	0.0	-13.1	0.0	-77.4	0.0	77.4	0.0	77.4
	Max Fy	SRV 3/ 2	-113.3	4.4	-13.6	-0.1	-77.6	3.8	77.6	3.8	77.7
	Max Fz	SRV 3/ 7	-105.0	0.0	-13.1	0.0	-77.4	0.0	77.4	0.0	77.4
	Max Mx	SRV 3/ 8	-112.9	3.8	-13.5	1.4	-76.6	4.6	76.6	4.8	76.7
	Max My	SRV 3/ 6	-120.7	0.0	-13.7	0.0	-75.8	0.0	75.8	0.0	75.8
Load No.	Max Mz	SRV 3/ 8	-112.9	3.8	-13.5	1.4	-76.6	4.6	76.6	4.8	76.7
6	Max Mxy	SRV 3/ 46	-307.4	0.0	-23.9	0.0	-118.2	0.0	118.2	0.0	118.2
	Max Mxz	SRV 3/ 8	-112.9	3.8	-13.5	1.4	-76.6	4.6	76.6	4.8	76.7
Member	Max Myz	SRV 3/ 46	-307.4	0.0	-23.9	0.0	-118.2	0.0	118.2	0.0	118.2
747	Min Fx	SRV 3/ 54	-325.1	0.0	-24.3	0.0	-115.2	0.0	115.2	0.0	115.2
	Min Fy	SRV 3/ 1	-105.7	0.0	-13.5	0.0	-79.6	0.0	79.6	0.0	79.6
Joint	Min Fz	SRV 3/ 49	-323.2	0.0	-24.4	0.0	-116.4	0.0	116.4	0.0	116.4
732	Min Mx	SRV 3/ 5	-121.1	0.6	-13.9	-1.4	-76.6	-0.9	76.7	1.7	76.6
	Min My	SRV 3/ 46	-307.4	0.0	-23.9	0.0	-118.2	0.0	118.2	0.0	118.2
	Min Mz	SRV 3/ 5	-121.1	0.6	-13.9	-1.4	-76.6	-0.9	76.7	1.7	76.6
	Min Mxy	SRV 3/ 6	-120.7	0.0	-13.7	0.0	-75.8	0.0	75.8	0.0	75.8
	Min Mxz	SRV 3/ 1	-105.7	0.0	-13.5	0.0	-79.6	0.0	79.6	0.0	79.6
	Min Myz	SRV 3/ 6	-120.7	0.0	-13.7	0.0	-75.8	0.0	75.8	0.0	75.8

AASHTO Limit State: SRV 3 - SERVICE III

	Max/ Min ID	Combo ID	Fx (kips)	Fy (kips)	Fz (kips)	Mx (ft*kip)	My (ft*kip)	Mz (ft*kip)	Mxy (ft*kip)	Mxz (ft*kip)	Myz (ft*kip)
	Max Fx	SRV 3/ 8	-294.5	-1.2	7.8	7.4	-28.6	-20.4	29.6	21.7	35.1
	Max Fy	SRV 3/ 1	-328.3	0.0	8.2	0.0	-33.3	0.0	33.3	0.0	33.3
	Max Fz	SRV 3/ 46	-501.6	0.0	10.5	0.0	-44.9	0.0	44.9	0.0	44.9
	Max Mx	SRV 3/ 2	-310.4	-1.6	7.9	8.5	-30.8	-22.3	31.9	23.9	38.0
	Max My	SRV 3/ 9	-294.8	0.0	7.7	0.0	-28.4	0.0	28.4	0.0	28.4
Load No.	Max Mz	SRV 3/ 1	-328.3	0.0	8.2	0.0	-33.3	0.0	33.3	0.0	33.3
7	Max Mxy	SRV 3/ 46	-501.6	0.0	10.5	0.0	-44.9	0.0	44.9	0.0	44.9
	Max Mxz	SRV 3/ 2	-310.4	-1.6	7.9	8.5	-30.8	-22.3	31.9	23.9	38.0
Member	Max Myz	SRV 3/ 47	-483.7	-1.6	10.2	8.5	-42.4	-22.3	43.2	23.9	47.9
750	Min Fx	SRV 3/ 46	-501.6	0.0	10.5	0.0	-44.9	0.0	44.9	0.0	44.9
	Min Fy	SRV 3/ 2	-310.4	-1.6	7.9	8.5	-30.8	-22.3	31.9	23.9	38.0
Joint	Min Fz	SRV 3/ 3	-298.5	0.0	7.7	0.0	-28.8	0.0	28.8	0.0	28.8
733	Min Mx	SRV 3/ 1	-328.3	0.0	8.2	0.0	-33.3	0.0	33.3	0.0	33.3
	Min My	SRV 3/ 46	-501.6	0.0	10.5	0.0	-44.9	0.0	44.9	0.0	44.9
	Min Mz	SRV 3/ 2	-310.4	-1.6	7.9	8.5	-30.8	-22.3	31.9	23.9	38.0
	Min Mxy	SRV 3/ 9	-294.8	0.0	7.7	0.0	-28.4	0.0	28.4	0.0	28.4
	Min Mxz	SRV 3/ 1	-328.3	0.0	8.2	0.0	-33.3	0.0	33.3	0.0	33.3
	Min Myz	SRV 3/ 9	-294.8	0.0	7.7	0.0	-28.4	0.0	28.4	0.0	28.4
	Max Fx	SRV 3/ 46	506.9	0.0	-5.3	0.0	-66.8	0.0	66.8	0.0	66.8
	Max Fy	SRV 3/ 2	315.7	1.6	-2.7	-8.5	-44.3	0.0	45.1	8.5	44.3
	Max Fz	SRV 3/ 3	303.8	0.0	-2.5	0.0	-42.9	0.0	42.9	0.0	42.9
	Max Mx	SRV 3/ 1	333.6	0.0	-3.0	0.0	-46.4	0.0	46.4	0.0	46.4
	Max My	SRV 3/ 6	301.3	0.0	-2.5	0.0	-42.4	0.0	42.4	0.0	42.4
Load No.	Max Mz	SRV 3/ 8	299.8	1.2	-2.6	-7.4	-43.7	3.0	44.3	8.0	43.8
8	Max Mxy	SRV 3/ 46	506.9	0.0	-5.3	0.0	-66.8	0.0	66.8	0.0	66.8
	Max Mxz	SRV 3/ 2	315.7	1.6	-2.7	-8.5	-44.3	0.0	45.1	8.5	44.3
Member	Max Myz	SRV 3/ 46	506.9	0.0	-5.3	0.0	-66.8	0.0	66.8	0.0	66.8
750	Min Fx	SRV 3/ 8	299.8	1.2	-2.6	-7.4	-43.7	3.0	44.3	8.0	43.8
	Min Fy	SRV 3/ 1	333.6	0.0	-3.0	0.0	-46.4	0.0	46.4	0.0	46.4
Joint	Min Fz	SRV 3/ 46	506.9	0.0	-5.3	0.0	-66.8	0.0	66.8	0.0	66.8
734	Min Mx	SRV 3/ 2	315.7	1.6	-2.7	-8.5	-44.3	0.0	45.1	8.5	44.3
	Min My	SRV 3/ 46	506.9	0.0	-5.3	0.0	-66.8	0.0	66.8	0.0	66.8
	Min Mz	SRV 3/ 5	313.5	0.3	-2.6	-1.0	-42.8	-3.0	42.9	3.2	42.9
	Min Mxy	SRV 3/ 6	301.3	0.0	-2.5	0.0	-42.4	0.0	42.4	0.0	42.4
	Min Mxz	SRV 3/ 1	333.6	0.0	-3.0	0.0	-46.4	0.0	46.4	0.0	46.4
	Min Myz	SRV 3/ 6	301.3	0.0	-2.5	0.0	-42.4	0.0	42.4	0.0	42.4

AASHTO Limit State: SRV 3 - SERVICE III

	Max/ Min ID	Combo ID	Fx (kips)	Fy (kips)	Fz (kips)	Mx (ft*kip)	My (ft*kip)	Mz (ft*kip)	Mxy (ft*kip)	Mxz (ft*kip)	Myz (ft*kip)
	Max Fx	SRV 3/ 49	258.1	0.0	23.6	0.0	-96.6	0.0	96.6	0.0	96.6
	Max Fy	SRV 3/ 1	130.2	0.0	18.6	0.0	-76.3	0.0	76.3	0.0	76.3
	Max Fz	SRV 3/ 49	258.1	0.0	23.6	0.0	-96.6	0.0	96.6	0.0	96.6
	Max Mx	SRV 3/ 2	127.9	-3.8	17.8	2.7	-72.6	-35.8	72.6	35.9	80.9
	Max My	SRV 3/ 8	117.0	-3.2	16.8	1.4	-69.0	-31.4	69.0	31.4	75.8
Load No.	Max Mz	SRV 3/ 1	130.2	0.0	18.6	0.0	-76.3	0.0	76.3	0.0	76.3
9	Max Mxy	SRV 3/ 46	240.8	0.0	23.5	0.0	-96.9	0.0	96.9	0.0	96.9
	Max Mxz	SRV 3/ 2	127.9	-3.8	17.8	2.7	-72.6	-35.8	72.6	35.9	80.9
Member	Max Myz	SRV 3/ 47	238.5	-3.8	22.7	2.7	-93.2	-35.8	93.2	35.9	99.8
753	Min Fx	SRV 3/ 7	108.3	0.0	16.7	0.0	-69.1	0.0	69.1	0.0	69.1
	Min Fy	SRV 3/ 2	127.9	-3.8	17.8	2.7	-72.6	-35.8	72.6	35.9	80.9
Joint	Min Fz	SRV 3/ 7	108.3	0.0	16.7	0.0	-69.1	0.0	69.1	0.0	69.1
735	Min Mx	SRV 3/ 1	130.2	0.0	18.6	0.0	-76.3	0.0	76.3	0.0	76.3
	Min My	SRV 3/ 46	240.8	0.0	23.5	0.0	-96.9	0.0	96.9	0.0	96.9
	Min Mz	SRV 3/ 2	127.9	-3.8	17.8	2.7	-72.6	-35.8	72.6	35.9	80.9
	Min Mxy	SRV 3/ 8	117.0	-3.2	16.8	1.4	-69.0	-31.4	69.0	31.4	75.8
	Min Mxz	SRV 3/ 1	130.2	0.0	18.6	0.0	-76.3	0.0	76.3	0.0	76.3
	Min Myz	SRV 3/ 9	127.3	0.0	17.0	0.0	-69.0	0.0	69.0	0.0	69.0
	Max Fx	SRV 3/ 7	-104.3	0.0	-15.9	0.0	-56.0	0.0	56.0	0.0	56.0
	Max Fy	SRV 3/ 2	-123.9	3.8	-17.0	-2.7	-60.2	6.6	60.3	7.1	60.6
	Max Fz	SRV 3/ 7	-104.3	0.0	-15.9	0.0	-56.0	0.0	56.0	0.0	56.0
	Max Mx	SRV 3/ 1	-126.2	0.0	-17.8	0.0	-62.9	0.0	62.9	0.0	62.9
	Max My	SRV 3/ 7	-104.3	0.0	-15.9	0.0	-56.0	0.0	56.0	0.0	56.0
Load No.	Max Mz	SRV 3/ 8	-113.0	3.2	-16.0	-1.4	-56.7	6.6	56.7	6.8	57.1
10	Max Mxy	SRV 3/ 49	-254.1	0.0	-22.8	0.0	-81.1	0.0	81.1	0.0	81.1
	Max Mxz	SRV 3/ 2	-123.9	3.8	-17.0	-2.7	-60.2	6.6	60.3	7.1	60.6
Member	Max Myz	SRV 3/ 49	-254.1	0.0	-22.8	0.0	-81.1	0.0	81.1	0.0	81.1
753	Min Fx	SRV 3/ 49	-254.1	0.0	-22.8	0.0	-81.1	0.0	81.1	0.0	81.1
	Min Fy	SRV 3/ 1	-126.2	0.0	-17.8	0.0	-62.9	0.0	62.9	0.0	62.9
Joint	Min Fz	SRV 3/ 49	-254.1	0.0	-22.8	0.0	-81.1	0.0	81.1	0.0	81.1
736	Min Mx	SRV 3/ 2	-123.9	3.8	-17.0	-2.7	-60.2	6.6	60.3	7.1	60.6
	Min My	SRV 3/ 49	-254.1	0.0	-22.8	0.0	-81.1	0.0	81.1	0.0	81.1
	Min Mz	SRV 3/ 5	-132.7	0.6	-17.1	-1.4	-61.0	-0.1	61.0	1.4	61.0
	Min Mxy	SRV 3/ 7	-104.3	0.0	-15.9	0.0	-56.0	0.0	56.0	0.0	56.0
	Min Mxz	SRV 3/ 1	-126.2	0.0	-17.8	0.0	-62.9	0.0	62.9	0.0	62.9
	Min Myz	SRV 3/ 7	-104.3	0.0	-15.9	0.0	-56.0	0.0	56.0	0.0	56.0

	AASHTO Limit State: SRV 3 - SERVICE III											
	Max/ Min ID	**Combo ID**	**Fx (kips)**	**Fy (kips)**	**Fz (kips)**	**Mx (ft*kip)**	**My (ft*kip)**	**Mz (ft*kip)**	**Mxy (ft*kip)**	**Mxz (ft*kip)**	**Myz (ft*kip)**
	Max Fx	SRV 3/ 16	-154.2	0.0	4.2	0.0	3.0	0.0	3.0	0.0	3.0
	Max Fy	SRV 3/ 1	-262.7	0.0	5.4	0.0	-12.4	0.0	12.4	0.0	12.4
	Max Fz	SRV 3/ 31	-308.9	0.0	6.3	0.0	-18.7	0.0	18.7	0.0	18.7
	Max Mx	SRV 3/ 2	-237.5	-1.0	5.2	7.3	-10.7	-15.6	12.9	17.2	18.9
	Max My	SRV 3/ 25	-157.8	0.0	4.3	0.0	4.1	0.0	4.1	0.0	4.1
Load No.	Max Mz	SRV 3/ 1	-262.7	0.0	5.4	0.0	-12.4	0.0	12.4	0.0	12.4
11	Max Mxy	SRV 3/ 31	-308.9	0.0	6.3	0.0	-18.7	0.0	18.7	0.0	18.7
	Max Mxz	SRV 3/ 2	-237.5	-1.0	5.2	7.3	-10.7	-15.6	12.9	17.2	18.9
Member	Max Myz	SRV 3/ 29	-273.3	-1.0	5.7	7.3	-12.9	-15.6	14.8	17.2	20.2
756	Min Fx	SRV 3/ 31	-308.9	0.0	6.3	0.0	-18.7	0.0	18.7	0.0	18.7
	Min Fy	SRV 3/ 2	-237.5	-1.0	5.2	7.3	-10.7	-15.6	12.9	17.2	18.9
Joint	Min Fz	SRV 3/ 16	-154.2	0.0	4.2	0.0	3.0	0.0	3.0	0.0	3.0
737	Min Mx	SRV 3/ 1	-262.7	0.0	5.4	0.0	-12.4	0.0	12.4	0.0	12.4
	Min My	SRV 3/ 31	-308.9	0.0	6.3	0.0	-18.7	0.0	18.7	0.0	18.7
	Min Mz	SRV 3/ 2	-237.5	-1.0	5.2	7.3	-10.7	-15.6	12.9	17.2	18.9
	Min Mxy	SRV 3/ 27	-167.8	0.0	4.7	0.0	0.1	0.0	0.1	0.0	0.1
	Min Mxz	SRV 3/ 1	-262.7	0.0	5.4	0.0	-12.4	0.0	12.4	0.0	12.4
	Min Myz	SRV 3/ 27	-167.8	0.0	4.7	0.0	0.1	0.0	0.1	0.0	0.1
	Max Fx	SRV 3/ 31	314.0	0.0	-0.7	0.0	-32.2	0.0	32.2	0.0	32.2
	Max Fy	SRV 3/ 2	242.6	1.0	0.4	-7.3	-24.7	2.1	25.8	7.6	24.8
	Max Fz	SRV 3/ 16	159.3	0.0	1.4	0.0	-23.7	0.0	23.7	0.0	23.7
	Max Mx	SRV 3/ 1	267.8	0.0	0.2	0.0	-25.8	0.0	25.8	0.0	25.8
	Max My	SRV 3/ 7	207.1	0.0	1.0	0.0	-21.9	0.0	21.9	0.0	21.9
Load No.	Max Mz	SRV 3/ 8	212.3	0.6	0.8	-5.9	-22.7	4.1	23.5	7.2	23.1
12	Max Mxy	SRV 3/ 49	269.8	0.0	-0.4	0.0	-37.4	0.0	37.4	0.0	37.4
	Max Mxz	SRV 3/ 2	242.6	1.0	0.4	-7.3	-24.7	2.1	25.8	7.6	24.8
Member	Max Myz	SRV 3/ 49	269.8	0.0	-0.4	0.0	-37.4	0.0	37.4	0.0	37.4
756	Min Fx	SRV 3/ 16	159.3	0.0	1.4	0.0	-23.7	0.0	23.7	0.0	23.7
	Min Fy	SRV 3/ 1	267.8	0.0	0.2	0.0	-25.8	0.0	25.8	0.0	25.8
Joint	Min Fz	SRV 3/ 31	314.0	0.0	-0.7	0.0	-32.2	0.0	32.2	0.0	32.2
738	Min Mx	SRV 3/ 2	242.6	1.0	0.4	-7.3	-24.7	2.1	25.8	7.6	24.8
	Min My	SRV 3/ 49	269.8	0.0	-0.4	0.0	-37.4	0.0	37.4	0.0	37.4
	Min Mz	SRV 3/ 5	247.9	0.3	0.2	-1.4	-25.7	-2.0	25.7	2.4	25.8
	Min Mxy	SRV 3/ 7	207.1	0.0	1.0	0.0	-21.9	0.0	21.9	0.0	21.9
	Min Mxz	SRV 3/ 1	267.8	0.0	0.2	0.0	-25.8	0.0	25.8	0.0	25.8
	Min Myz	SRV 3/ 7	207.1	0.0	1.0	0.0	-21.9	0.0	21.9	0.0	21.9

AASHTO Limit State: SRV 3 - SERVICE III

	Max/ Min ID	Combo ID	Fx (kips)	Fy (kips)	Fz (kips)	Mx (ft*kip)	My (ft*kip)	Mz (ft*kip)	Mxy (ft*kip)	Mxz (ft*kip)	Myz (ft*kip)
	Max Fx	SRV 3/ 31	78.0	0.0	14.8	0.0	-55.0	0.0	55.0	0.0	55.0
	Max Fy	SRV 3/ 1	18.7	0.0	12.8	0.0	-46.3	0.0	46.3	0.0	46.3
	Max Fz	SRV 3/ 31	78.0	0.0	14.8	0.0	-55.0	0.0	55.0	0.0	55.0
	Max Mx	SRV 3/ 2	17.8	-2.9	11.9	3.6	-43.0	-26.4	43.2	26.6	50.5
	Max My	SRV 3/ 25	-51.8	0.0	3.8	0.0	-16.7	0.0	16.7	0.0	16.7
Load No.	Max Mz	SRV 3/ 1	18.7	0.0	12.8	0.0	-46.3	0.0	46.3	0.0	46.3
13	Max Mxy	SRV 3/ 31	78.0	0.0	14.8	0.0	-55.0	0.0	55.0	0.0	55.0
	Max Mxz	SRV 3/ 2	17.8	-2.9	11.9	3.6	-43.0	-26.4	43.2	26.6	50.5
Member	Max Myz	SRV 3/ 31	78.0	0.0	14.8	0.0	-55.0	0.0	55.0	0.0	55.0
759	Min Fx	SRV 3/ 16	-54.5	0.0	4.8	0.0	-19.6	0.0	19.6	0.0	19.6
	Min Fy	SRV 3/ 2	17.8	-2.9	11.9	3.6	-43.0	-26.4	43.2	26.6	50.5
Joint	Min Fz	SRV 3/ 25	-51.8	0.0	3.8	0.0	-16.7	0.0	16.7	0.0	16.7
739	Min Mx	SRV 3/ 1	18.7	0.0	12.8	0.0	-46.3	0.0	46.3	0.0	46.3
	Min My	SRV 3/ 31	78.0	0.0	14.8	0.0	-55.0	0.0	55.0	0.0	55.0
	Min Mz	SRV 3/ 2	17.8	-2.9	11.9	3.6	-43.0	-26.4	43.2	26.6	50.5
	Min Mxy	SRV 3/ 25	-51.8	0.0	3.8	0.0	-16.7	0.0	16.7	0.0	16.7
	Min Mxz	SRV 3/ 1	18.7	0.0	12.8	0.0	-46.3	0.0	46.3	0.0	46.3
	Min Myz	SRV 3/ 25	-51.8	0.0	3.8	0.0	-16.7	0.0	16.7	0.0	16.7
	Max Fx	SRV 3/ 16	58.0	0.0	-3.6	0.0	-9.9	0.0	9.9	0.0	9.9
	Max Fy	SRV 3/ 2	-14.3	2.9	-10.7	-3.6	-35.9	6.1	36.1	7.1	36.5
	Max Fz	SRV 3/ 25	55.3	0.0	-2.6	0.0	-5.1	0.0	5.1	0.0	5.1
	Max Mx	SRV 3/ 1	-15.2	0.0	-11.6	0.0	-38.9	0.0	38.9	0.0	38.9
	Max My	SRV 3/ 25	55.3	0.0	-2.6	0.0	-5.1	0.0	5.1	0.0	5.1
Load No.	Max Mz	SRV 3/ 2	-14.3	2.9	-10.7	-3.6	-35.9	6.1	36.1	7.1	36.5
14	Max Mxy	SRV 3/ 4	-54.6	0.0	-13.2	0.0	-44.7	0.0	44.7	0.0	44.7
	Max Mxz	SRV 3/ 2	-14.3	2.9	-10.7	-3.6	-35.9	6.1	36.1	7.1	36.5
Member	Max Myz	SRV 3/ 4	-54.6	0.0	-13.2	0.0	-44.7	0.0	44.7	0.0	44.7
759	Min Fx	SRV 3/ 31	-74.5	0.0	-13.6	0.0	-44.7	0.0	44.7	0.0	44.7
	Min Fy	SRV 3/ 1	-15.2	0.0	-11.6	0.0	-38.9	0.0	38.9	0.0	38.9
Joint	Min Fz	SRV 3/ 31	-74.5	0.0	-13.6	0.0	-44.7	0.0	44.7	0.0	44.7
740	Min Mx	SRV 3/ 2	-14.3	2.9	-10.7	-3.6	-35.9	6.1	36.1	7.1	36.5
	Min My	SRV 3/ 4	-54.6	0.0	-13.2	0.0	-44.7	0.0	44.7	0.0	44.7
	Min Mz	SRV 3/ 1	-15.2	0.0	-11.6	0.0	-38.9	0.0	38.9	0.0	38.9
	Min Mxy	SRV 3/ 25	55.3	0.0	-2.6	0.0	-5.1	0.0	5.1	0.0	5.1
	Min Mxz	SRV 3/ 1	-15.2	0.0	-11.6	0.0	-38.9	0.0	38.9	0.0	38.9
	Min Myz	SRV 3/ 25	55.3	0.0	-2.6	0.0	-5.1	0.0	5.1	0.0	5.1

AASHTO Limit State: SRV 3 - SERVICE III

	Max/ Min ID	Combo ID	Fx (kips)	Fy (kips)	Fz (kips)	Mx (ft*kip)	My (ft*kip)	Mz (ft*kip)	Mxy (ft*kip)	Mxz (ft*kip)	Myz (ft*kip)
	Max Fx	SRV 3/ 52	308.0	0.0	-2.9	0.0	71.8	0.0	71.8	0.0	71.8
	Max Fy	SRV 3/ 1	-83.3	0.0	3.2	0.0	10.8	0.0	10.8	0.0	10.8
	Max Fz	SRV 3/ 4	-125.6	0.0	4.1	0.0	2.6	0.0	2.6	0.0	2.6
	Max Mx	SRV 3/ 2	-62.8	-0.3	3.0	4.6	12.0	-8.0	12.8	9.2	14.4
	Max My	SRV 3/ 52	308.0	0.0	-2.9	0.0	71.8	0.0	71.8	0.0	71.8
Load No.	Max Mz	SRV 3/ 1	-83.3	0.0	3.2	0.0	10.8	0.0	10.8	0.0	10.8
15	Max Mxy	SRV 3/ 52	308.0	0.0	-2.9	0.0	71.8	0.0	71.8	0.0	71.8
	Max Mxz	SRV 3/ 2	-62.8	-0.3	3.0	4.6	12.0	-8.0	12.8	9.2	14.4
Member	Max Myz	SRV 3/ 52	308.0	0.0	-2.9	0.0	71.8	0.0	71.8	0.0	71.8
762	Min Fx	SRV 3/ 4	-125.6	0.0	4.1	0.0	2.6	0.0	2.6	0.0	2.6
	Min Fy	SRV 3/ 2	-62.8	-0.3	3.0	4.6	12.0	-8.0	12.8	9.2	14.4
Joint	Min Fz	SRV 3/ 52	308.0	0.0	-2.9	0.0	71.8	0.0	71.8	0.0	71.8
741	Min Mx	SRV 3/ 1	-83.3	0.0	3.2	0.0	10.8	0.0	10.8	0.0	10.8
	Min My	SRV 3/ 4	-125.6	0.0	4.1	0.0	2.6	0.0	2.6	0.0	2.6
	Min Mz	SRV 3/ 2	-62.8	-0.3	3.0	4.6	12.0	-8.0	12.8	9.2	14.4
	Min Mxy	SRV 3/ 4	-125.6	0.0	4.1	0.0	2.6	0.0	2.6	0.0	2.6
	Min Mxz	SRV 3/ 1	-83.3	0.0	3.2	0.0	10.8	0.0	10.8	0.0	10.8
	Min Myz	SRV 3/ 4	-125.6	0.0	4.1	0.0	2.6	0.0	2.6	0.0	2.6
	Max Fx	SRV 3/ 4	130.5	0.0	1.6	0.0	-19.8	0.0	19.8	0.0	19.8
	Max Fy	SRV 3/ 2	67.7	0.3	2.7	-4.6	-14.0	2.8	14.7	5.4	14.3
	Max Fz	SRV 3/ 52	-303.1	0.0	8.6	0.0	8.8	0.0	8.8	0.0	8.8
	Max Mx	SRV 3/ 1	88.2	0.0	2.5	0.0	-15.6	0.0	15.6	0.0	15.6
	Max My	SRV 3/ 52	-303.1	0.0	8.6	0.0	8.8	0.0	8.8	0.0	8.8
Load No.	Max Mz	SRV 3/ 8	26.1	0.0	3.3	-2.7	-10.3	4.2	10.7	5.0	11.2
16	Max Mxy	SRV 3/ 4	130.5	0.0	1.6	0.0	-19.8	0.0	19.8	0.0	19.8
	Max Mxz	SRV 3/ 2	67.7	0.3	2.7	-4.6	-14.0	2.8	14.7	5.4	14.3
Member	Max Myz	SRV 3/ 4	130.5	0.0	1.6	0.0	-19.8	0.0	19.8	0.0	19.8
762	Min Fx	SRV 3/ 52	-303.1	0.0	8.6	0.0	8.8	0.0	8.8	0.0	8.8
	Min Fy	SRV 3/ 1	88.2	0.0	2.5	0.0	-15.6	0.0	15.6	0.0	15.6
Joint	Min Fz	SRV 3/ 4	130.5	0.0	1.6	0.0	-19.8	0.0	19.8	0.0	19.8
742	Min Mx	SRV 3/ 2	67.7	0.3	2.7	-4.6	-14.0	2.8	14.7	5.4	14.3
	Min My	SRV 3/ 4	130.5	0.0	1.6	0.0	-19.8	0.0	19.8	0.0	19.8
	Min Mz	SRV 3/ 5	88.9	0.3	2.3	-1.9	-16.1	-1.4	16.2	2.4	16.1
	Min Mxy	SRV 3/ 42	-181.5	0.0	6.4	0.0	0.2	0.0	0.2	0.0	0.2
	Min Mxz	SRV 3/ 1	88.2	0.0	2.5	0.0	-15.6	0.0	15.6	0.0	15.6
	Min Myz	SRV 3/ 42	-181.5	0.0	6.4	0.0	0.2	0.0	0.2	0.0	0.2

AASHTO Limit State: SRV 3 - SERVICE III

	Max/ Min ID	Combo ID	Fx (kips)	Fy (kips)	Fz (kips)	Mx (ft*kip)	My (ft*kip)	Mz (ft*kip)	Mxy (ft*kip)	Mxz (ft*kip)	Myz (ft*kip)
	Max Fx	SRV 3/ 4	40.6	0.0	9.7	0.0	-20.8	0.1	20.8	0.1	20.8
	Max Fy	SRV 3/ 1	-2.0	0.0	6.9	0.0	-9.0	0.1	9.0	0.1	9.0
	Max Fz	SRV 3/ 4	40.6	0.0	9.7	0.0	-20.8	0.1	20.8	0.1	20.8
	Max Mx	SRV 3/ 2	-7.9	-1.5	6.2	2.5	-6.8	-13.7	7.2	14.0	15.3
	Max My	SRV 3/ 52	-205.6	0.0	-18.1	0.0	85.9	0.1	85.9	0.1	85.9
Load No.	Max Mz	SRV 3/ 1	-2.0	0.0	6.9	0.0	-9.0	0.1	9.0	0.1	9.0
17	Max Mxy	SRV 3/ 52	-205.6	0.0	-18.1	0.0	85.9	0.1	85.9	0.1	85.9
	Max Mxz	SRV 3/ 2	-7.9	-1.5	6.2	2.5	-6.8	-13.7	7.2	14.0	15.3
Member	Max Myz	SRV 3/ 52	-205.6	0.0	-18.1	0.0	85.9	0.1	85.9	0.1	85.9
765	Min Fx	SRV 3/ 52	-205.6	0.0	-18.1	0.0	85.9	0.1	85.9	0.1	85.9
	Min Fy	SRV 3/ 2	-7.9	-1.5	6.2	2.5	-6.8	-13.7	7.2	14.0	15.3
Joint	Min Fz	SRV 3/ 52	-205.6	0.0	-18.1	0.0	85.9	0.1	85.9	0.1	85.9
743	Min Mx	SRV 3/ 1	-2.0	0.0	6.9	0.0	-9.0	0.1	9.0	0.1	9.0
	Min My	SRV 3/ 4	40.6	0.0	9.7	0.0	-20.8	0.1	20.8	0.1	20.8
	Min Mz	SRV 3/ 2	-7.9	-1.5	6.2	2.5	-6.8	-13.7	7.2	14.0	15.3
	Min Mxy	SRV 3/ 31	19.8	0.0	4.2	0.0	-0.4	0.1	0.4	0.1	0.5
	Min Mxz	SRV 3/ 1	-2.0	0.0	6.9	0.0	-9.0	0.1	9.0	0.1	9.0
	Min Myz	SRV 3/ 31	19.8	0.0	4.2	0.0	-0.4	0.1	0.4	0.1	0.5
	Max Fx	SRV 3/ 52	208.7	0.0	19.5	0.0	37.1	0.0	37.1	0.0	37.1
	Max Fy	SRV 3/ 2	11.0	1.5	-4.8	-2.5	-29.1	4.0	29.2	4.7	29.4
	Max Fz	SRV 3/ 52	208.7	0.0	19.5	0.0	37.1	0.0	37.1	0.0	37.1
	Max Mx	SRV 3/ 1	5.1	0.0	-5.5	0.0	-31.4	0.0	31.4	0.0	31.4
	Max My	SRV 3/ 52	208.7	0.0	19.5	0.0	37.1	0.0	37.1	0.0	37.1
Load No.	Max Mz	SRV 3/ 2	11.0	1.5	-4.8	-2.5	-29.1	4.0	29.2	4.7	29.4
18	Max Mxy	SRV 3/ 4	-37.5	0.0	-8.3	0.0	-38.1	0.0	38.1	0.0	38.1
	Max Mxz	SRV 3/ 2	11.0	1.5	-4.8	-2.5	-29.1	4.0	29.2	4.7	29.4
Member	Max Myz	SRV 3/ 4	-37.5	0.0	-8.3	0.0	-38.1	0.0	38.1	0.0	38.1
765	Min Fx	SRV 3/ 4	-37.5	0.0	-8.3	0.0	-38.1	0.0	38.1	0.0	38.1
	Min Fy	SRV 3/ 1	5.1	0.0	-5.5	0.0	-31.4	0.0	31.4	0.0	31.4
Joint	Min Fz	SRV 3/ 4	-37.5	0.0	-8.3	0.0	-38.1	0.0	38.1	0.0	38.1
744	Min Mx	SRV 3/ 2	11.0	1.5	-4.8	-2.5	-29.1	4.0	29.2	4.7	29.4
	Min My	SRV 3/ 4	-37.5	0.0	-8.3	0.0	-38.1	0.0	38.1	0.0	38.1
	Min Mz	SRV 3/ 1	5.1	0.0	-5.5	0.0	-31.4	0.0	31.4	0.0	31.4
	Min Mxy	SRV 3/ 12	106.1	0.0	6.1	0.0	0.8	0.0	0.8	0.0	0.8
	Min Mxz	SRV 3/ 1	5.1	0.0	-5.5	0.0	-31.4	0.0	31.4	0.0	31.4
	Min Myz	SRV 3/ 12	106.1	0.0	6.1	0.0	0.8	0.0	0.8	0.0	0.8

AASHTO Limit State: SRV 3 - SERVICE III

	Max/ Min ID	Combo ID	Fx (kips)	Fy (kips)	Fz (kips)	Mx (ft*kip)	My (ft*kip)	Mz (ft*kip)	Mxy (ft*kip)	Mxz (ft*kip)	Myz (ft*kip)
	Max Fx	SRV 3/ 52	971.1	0.0	-2.7	0.0	91.2	0.1	91.2	0.1	91.2
	Max Fy	SRV 3/ 8	145.4	0.8	5.7	-2.4	-13.7	8.9	13.9	9.2	16.3
	Max Fz	SRV 3/ 4	0.0	0.0	7.3	0.0	-32.0	0.1	32.0	0.1	32.0
	Max Mx	SRV 3/ 5	55.7	-0.5	6.6	2.7	-23.9	-6.0	24.1	6.6	24.6
	Max My	SRV 3/ 52	971.1	0.0	-2.7	0.0	91.2	0.1	91.2	0.1	91.2
Load No.	Max Mz	SRV 3/ 8	145.4	0.8	5.7	-2.4	-13.7	8.9	13.9	9.2	16.3
19	Max Mxy	SRV 3/ 52	971.1	0.0	-2.7	0.0	91.2	0.1	91.2	0.1	91.2
	Max Mxz	SRV 3/ 8	145.4	0.8	5.7	-2.4	-13.7	8.9	13.9	9.2	16.3
Member	Max Myz	SRV 3/ 52	971.1	0.0	-2.7	0.0	91.2	0.1	91.2	0.1	91.2
768	Min Fx	SRV 3/ 4	0.0	0.0	7.3	0.0	-32.0	0.1	32.0	0.1	32.0
	Min Fy	SRV 3/ 5	55.7	-0.5	6.6	2.7	-23.9	-6.0	24.1	6.6	24.6
Joint	Min Fz	SRV 3/ 52	971.1	0.0	-2.7	0.0	91.2	0.1	91.2	0.1	91.2
745	Min Mx	SRV 3/ 8	145.4	0.8	5.7	-2.4	-13.7	8.9	13.9	9.2	16.3
	Min My	SRV 3/ 4	0.0	0.0	7.3	0.0	-32.0	0.1	32.0	0.1	32.0
	Min Mz	SRV 3/ 5	55.7	-0.5	6.6	2.7	-23.9	-6.0	24.1	6.6	24.6
	Min Mxy	SRV 3/ 31	263.7	0.0	4.7	0.0	1.8	0.1	1.8	0.1	1.8
	Min Mxz	SRV 3/ 1	67.9	0.0	6.9	0.0	-27.4	0.1	27.4	0.1	27.4
	Min Myz	SRV 3/ 31	263.7	0.0	4.7	0.0	1.8	0.1	1.8	0.1	1.8
	Max Fx	SRV 3/ 4	5.3	0.0	-0.5	0.0	-32.6	0.0	32.6	0.0	32.6
	Max Fy	SRV 3/ 5	-50.4	0.5	0.2	-2.7	-29.1	-1.2	29.3	3.0	29.2
	Max Fz	SRV 3/ 52	-965.8	0.0	9.5	0.0	9.0	0.0	9.0	0.0	9.0
	Max Mx	SRV 3/ 8	-140.1	-0.8	1.1	2.4	-24.4	4.6	24.5	5.2	24.9
	Max My	SRV 3/ 52	-965.8	0.0	9.5	0.0	9.0	0.0	9.0	0.0	9.0
Load No.	Max Mz	SRV 3/ 8	-140.1	-0.8	1.1	2.4	-24.4	4.6	24.5	5.2	24.9
20	Max Mxy	SRV 3/ 4	5.3	0.0	-0.5	0.0	-32.6	0.0	32.6	0.0	32.6
	Max Mxz	SRV 3/ 8	-140.1	-0.8	1.1	2.4	-24.4	4.6	24.5	5.2	24.9
Member	Max Myz	SRV 3/ 4	5.3	0.0	-0.5	0.0	-32.6	0.0	32.6	0.0	32.6
768	Min Fx	SRV 3/ 52	-965.8	0.0	9.5	0.0	9.0	0.0	9.0	0.0	9.0
	Min Fy	SRV 3/ 8	-140.1	-0.8	1.1	2.4	-24.4	4.6	24.5	5.2	24.9
Joint	Min Fz	SRV 3/ 4	5.3	0.0	-0.5	0.0	-32.6	0.0	32.6	0.0	32.6
746	Min Mx	SRV 3/ 5	-50.4	0.5	0.2	-2.7	-29.1	-1.2	29.3	3.0	29.2
	Min My	SRV 3/ 4	5.3	0.0	-0.5	0.0	-32.6	0.0	32.6	0.0	32.6
	Min Mz	SRV 3/ 5	-50.4	0.5	0.2	-2.7	-29.1	-1.2	29.3	3.0	29.2
	Min Mxy	SRV 3/ 25	-702.1	0.0	6.9	0.0	0.4	0.0	0.4	0.0	0.4
	Min Mxz	SRV 3/ 1	-62.6	0.0	-0.1	0.0	-30.0	0.0	30.0	0.0	30.0
	Min Myz	SRV 3/ 25	-702.1	0.0	6.9	0.0	0.4	0.0	0.4	0.0	0.4

AASHTO Limit State: SRV 3 - SERVICE III

	Max/ Min ID	Combo ID	Fx (kips)	Fy (kips)	Fz (kips)	Mx (ft*kip)	My (ft*kip)	Mz (ft*kip)	Mxy (ft*kip)	Mxz (ft*kip)	Myz (ft*kip)
	Max Fx	SRV 3/ 54	76.1	0.0	96.6	-0.1	-617.6	-0.4	617.6	0.4	617.6
	Max Fy	SRV 3/ 5	47.8	2.2	21.4	1.1	132.5	26.5	132.5	26.5	135.1
	Max Fz	SRV 3/ 52	74.3	0.0	97.7	-0.1	-626.5	-0.5	626.5	0.5	626.5
	Max Mx	SRV 3/ 5	47.8	2.2	21.4	1.1	132.5	26.5	132.5	26.5	135.1
	Max My	SRV 3/ 4	46.3	0.0	16.3	-0.1	182.7	0.0	182.7	0.1	182.7
Load No.	Max Mz	SRV 3/ 5	47.8	2.2	21.4	1.1	132.5	26.5	132.5	26.5	135.1
21	Max Mxy	SRV 3/ 52	74.3	0.0	97.7	-0.1	-626.5	-0.5	626.5	0.5	626.5
	Max Mxz	SRV 3/ 44	68.4	-3.6	80.4	-1.9	-460.2	-41.7	460.2	41.7	462.1
Member	Max Myz	SRV 3/ 52	74.3	0.0	97.7	-0.1	-626.5	-0.5	626.5	0.5	626.5
771	Min Fx	SRV 3/ 4	46.3	0.0	16.3	-0.1	182.7	0.0	182.7	0.1	182.7
	Min Fy	SRV 3/ 8	49.9	-3.6	27.6	-1.9	72.8	-41.4	72.8	41.4	83.7
Joint	Min Fz	SRV 3/ 4	46.3	0.0	16.3	-0.1	182.7	0.0	182.7	0.1	182.7
747	Min Mx	SRV 3/ 8	49.9	-3.6	27.6	-1.9	72.8	-41.4	72.8	41.4	83.7
	Min My	SRV 3/ 52	74.3	0.0	97.7	-0.1	-626.5	-0.5	626.5	0.5	626.5
	Min Mz	SRV 3/ 44	68.4	-3.6	80.4	-1.9	-460.2	-41.7	460.2	41.7	462.1
	Min Mxy	SRV 3/ 31	54.4	0.0	38.1	-0.1	-48.1	-0.1	48.1	0.2	48.1
	Min Mxz	SRV 3/ 4	46.3	0.0	16.3	-0.1	182.7	0.0	182.7	0.1	182.7
	Min Myz	SRV 3/ 31	54.4	0.0	38.1	-0.1	-48.1	-0.1	48.1	0.2	48.1
	Max Fx	SRV 3/ 4	-36.1	0.0	-16.3	0.1	-394.6	0.0	394.6	0.1	394.6
	Max Fy	SRV 3/ 8	-39.7	3.6	-27.6	1.9	-431.5	-5.5	431.5	5.8	431.5
	Max Fz	SRV 3/ 4	-36.1	0.0	-16.3	0.1	-394.6	0.0	394.6	0.1	394.6
	Max Mx	SRV 3/ 8	-39.7	3.6	-27.6	1.9	-431.5	-5.5	431.5	5.8	431.5
	Max My	SRV 3/ 4	-36.1	0.0	-16.3	0.1	-394.6	0.0	394.6	0.1	394.6
Load No.	Max Mz	SRV 3/ 5	-37.6	-2.2	-21.4	-1.1	-409.8	1.3	409.8	1.7	409.8
22	Max Mxy	SRV 3/ 52	-64.1	0.0	-97.7	0.1	-640.7	-0.1	640.7	0.1	640.7
	Max Mxz	SRV 3/ 35	-47.8	3.6	-49.4	1.9	-482.9	-5.6	482.9	5.9	482.9
Member	Max Myz	SRV 3/ 52	-64.1	0.0	-97.7	0.1	-640.7	-0.1	640.7	0.1	640.7
771	Min Fx	SRV 3/ 54	-65.9	0.0	-96.6	0.1	-636.6	-0.1	636.6	0.1	636.6
	Min Fy	SRV 3/ 5	-37.6	-2.2	-21.4	-1.1	-409.8	1.3	409.8	1.7	409.8
Joint	Min Fz	SRV 3/ 52	-64.1	0.0	-97.7	0.1	-640.7	-0.1	640.7	0.1	640.7
748	Min Mx	SRV 3/ 5	-37.6	-2.2	-21.4	-1.1	-409.8	1.3	409.8	1.7	409.8
	Min My	SRV 3/ 52	-64.1	0.0	-97.7	0.1	-640.7	-0.1	640.7	0.1	640.7
	Min Mz	SRV 3/ 35	-47.8	3.6	-49.4	1.9	-482.9	-5.6	482.9	5.9	482.9
	Min Mxy	SRV 3/ 4	-36.1	0.0	-16.3	0.1	-394.6	0.0	394.6	0.1	394.6
	Min Mxz	SRV 3/ 1	-37.3	0.0	-18.8	0.1	-407.6	0.0	407.6	0.1	407.6
	Min Myz	SRV 3/ 4	-36.1	0.0	-16.3	0.1	-394.6	0.0	394.6	0.1	394.6

Limit State: SERVICE III

CR Creep
LF: 1
CR1: CR+SH+PT_EOC
CR2: CR+SH+PT_D10K

TU Uniform Temperature
LF: 1
TU1: TU-
TU2: TU+
TU3: TU+Temp. Diff.

DW DL Wearing Surfaces & Utilities
LF: 1
DW1: DW

LL Vehicular Live Load
LF: 0.8
LL1: LL1_Deck
LL2: LL1_Deck Offset
LL3: LL1_Roof
LL4: LL2_Deck
LL5: LL2_Deck Offset
LL6: LL2_Roof
LL7: LL3_Deck
LL8: LL3_Deck Offset
LL9: LL3_Roof

DC DL Structural Components & Attachments
LF: 1
DC1: DC

Combo ID	Load Combinations
SRV 3/ 1	1.00*(CR1*1.00 + TU1*1.00 + DW1*1.00 + LL1*0.80 + DC1*1.00)
SRV 3/ 2	1.00*(CR1*1.00 + TU1*1.00 + DW1*1.00 + LL2*0.80 + DC1*1.00)
SRV 3/ 3	1.00*(CR1*1.00 + TU1*1.00 + DW1*1.00 + LL3*0.80 + DC1*1.00)
SRV 3/ 4	1.00*(CR1*1.00 + TU1*1.00 + DW1*1.00 + LL4*0.80 + DC1*1.00)
SRV 3/ 5	1.00*(CR1*1.00 + TU1*1.00 + DW1*1.00 + LL5*0.80 + DC1*1.00)
SRV 3/ 6	1.00*(CR1*1.00 + TU1*1.00 + DW1*1.00 + LL6*0.80 + DC1*1.00)
SRV 3/ 7	1.00*(CR1*1.00 + TU1*1.00 + DW1*1.00 + LL7*0.80 + DC1*1.00)
SRV 3/ 8	1.00*(CR1*1.00 + TU1*1.00 + DW1*1.00 + LL8*0.80 + DC1*1.00)
SRV 3/ 9	1.00*(CR1*1.00 + TU1*1.00 + DW1*1.00 + LL9*0.80 + DC1*1.00)
SRV 3/ 10	1.00*(CR1*1.00 + TU2*1.00 + DW1*1.00 + LL1*0.80 + DC1*1.00)
SRV 3/ 11	1.00*(CR1*1.00 + TU2*1.00 + DW1*1.00 + LL2*0.80 + DC1*1.00)
SRV 3/ 12	1.00*(CR1*1.00 + TU2*1.00 + DW1*1.00 + LL3*0.80 + DC1*1.00)
SRV 3/ 13	1.00*(CR1*1.00 + TU2*1.00 + DW1*1.00 + LL4*0.80 + DC1*1.00)
SRV 3/ 14	1.00*(CR1*1.00 + TU2*1.00 + DW1*1.00 + LL5*0.80 + DC1*1.00)
SRV 3/ 15	1.00*(CR1*1.00 + TU2*1.00 + DW1*1.00 + LL6*0.80 + DC1*1.00)
SRV 3/ 16	1.00*(CR1*1.00 + TU2*1.00 + DW1*1.00 + LL7*0.80 + DC1*1.00)
SRV 3/ 17	1.00*(CR1*1.00 + TU2*1.00 + DW1*1.00 + LL8*0.80 + DC1*1.00)
SRV 3/ 18	1.00*(CR1*1.00 + TU2*1.00 + DW1*1.00 + LL9*0.80 + DC1*1.00)
SRV 3/ 19	1.00*(CR1*1.00 + TU3*1.00 + DW1*1.00 + LL1*0.80 + DC1*1.00)
SRV 3/ 20	1.00*(CR1*1.00 + TU3*1.00 + DW1*1.00 + LL2*0.80 + DC1*1.00)
SRV 3/ 21	1.00*(CR1*1.00 + TU3*1.00 + DW1*1.00 + LL3*0.80 + DC1*1.00)
SRV 3/ 22	1.00*(CR1*1.00 + TU3*1.00 + DW1*1.00 + LL4*0.80 + DC1*1.00)

SRV 3/ 23	1.00*(CR1*1.00 + TU3*1.00 + DW1*1.00 + LL5*0.80 + DC1*1.00)
SRV 3/ 24	1.00*(CR1*1.00 + TU3*1.00 + DW1*1.00 + LL6*0.80 + DC1*1.00)
SRV 3/ 25	1.00*(CR1*1.00 + TU3*1.00 + DW1*1.00 + LL7*0.80 + DC1*1.00)
SRV 3/ 26	1.00*(CR1*1.00 + TU3*1.00 + DW1*1.00 + LL8*0.80 + DC1*1.00)
SRV 3/ 27	1.00*(CR1*1.00 + TU3*1.00 + DW1*1.00 + LL9*0.80 + DC1*1.00)
SRV 3/ 28	1.00*(CR2*1.00 + TU1*1.00 + DW1*1.00 + LL1*0.80 + DC1*1.00)
SRV 3/ 29	1.00*(CR2*1.00 + TU1*1.00 + DW1*1.00 + LL2*0.80 + DC1*1.00)
SRV 3/ 30	1.00*(CR2*1.00 + TU1*1.00 + DW1*1.00 + LL3*0.80 + DC1*1.00)
SRV 3/ 31	1.00*(CR2*1.00 + TU1*1.00 + DW1*1.00 + LL4*0.80 + DC1*1.00)
SRV 3/ 32	1.00*(CR2*1.00 + TU1*1.00 + DW1*1.00 + LL5*0.80 + DC1*1.00)
SRV 3/ 33	1.00*(CR2*1.00 + TU1*1.00 + DW1*1.00 + LL6*0.80 + DC1*1.00)
SRV 3/ 34	1.00*(CR2*1.00 + TU1*1.00 + DW1*1.00 + LL7*0.80 + DC1*1.00)
SRV 3/ 35	1.00*(CR2*1.00 + TU1*1.00 + DW1*1.00 + LL8*0.80 + DC1*1.00)
SRV 3/ 36	1.00*(CR2*1.00 + TU1*1.00 + DW1*1.00 + LL9*0.80 + DC1*1.00)
SRV 3/ 37	1.00*(CR2*1.00 + TU2*1.00 + DW1*1.00 + LL1*0.80 + DC1*1.00)
SRV 3/ 38	1.00*(CR2*1.00 + TU2*1.00 + DW1*1.00 + LL2*0.80 + DC1*1.00)
SRV 3/ 39	1.00*(CR2*1.00 + TU2*1.00 + DW1*1.00 + LL3*0.80 + DC1*1.00)
SRV 3/ 40	1.00*(CR2*1.00 + TU2*1.00 + DW1*1.00 + LL4*0.80 + DC1*1.00)
SRV 3/ 41	1.00*(CR2*1.00 + TU2*1.00 + DW1*1.00 + LL5*0.80 + DC1*1.00)
SRV 3/ 42	1.00*(CR2*1.00 + TU2*1.00 + DW1*1.00 + LL6*0.80 + DC1*1.00)
SRV 3/ 43	1.00*(CR2*1.00 + TU2*1.00 + DW1*1.00 + LL7*0.80 + DC1*1.00)
SRV 3/ 44	1.00*(CR2*1.00 + TU2*1.00 + DW1*1.00 + LL8*0.80 + DC1*1.00)
SRV 3/ 45	1.00*(CR2*1.00 + TU2*1.00 + DW1*1.00 + LL9*0.80 + DC1*1.00)
SRV 3/ 46	1.00*(CR2*1.00 + TU3*1.00 + DW1*1.00 + LL1*0.80 + DC1*1.00)
SRV 3/ 47	1.00*(CR2*1.00 + TU3*1.00 + DW1*1.00 + LL2*0.80 + DC1*1.00)
SRV 3/ 48	1.00*(CR2*1.00 + TU3*1.00 + DW1*1.00 + LL3*0.80 + DC1*1.00)
SRV 3/ 49	1.00*(CR2*1.00 + TU3*1.00 + DW1*1.00 + LL4*0.80 + DC1*1.00)
SRV 3/ 50	1.00*(CR2*1.00 + TU3*1.00 + DW1*1.00 + LL5*0.80 + DC1*1.00)
SRV 3/ 51	1.00*(CR2*1.00 + TU3*1.00 + DW1*1.00 + LL6*0.80 + DC1*1.00)
SRV 3/ 52	1.00*(CR2*1.00 + TU3*1.00 + DW1*1.00 + LL7*0.80 + DC1*1.00)
SRV 3/ 53	1.00*(CR2*1.00 + TU3*1.00 + DW1*1.00 + LL8*0.80 + DC1*1.00)
SRV 3/ 54	1.00*(CR2*1.00 + TU3*1.00 + DW1*1.00 + LL9*0.80 + DC1*1.00)

Limit State: SERVICE III

CR Creep
LF: 1
CR1: CR+SH+PT_EOC
CR2: CR+SH+PT_D10K

TU Uniform Temperature
LF: 1
TU1: TU-
TU2: TU+
TU3: TU+Temp. Diff.

DW DL Wearing Surfaces & Utilities
LF: 1
DW1: DW

LL Vehicular Live Load
LF: 0.8
LL1: LL1_Deck
LL2: LL1_Deck Offset
LL3: LL1_Roof
LL4: LL2_Deck
LL5: LL2_Deck Offset
LL6: LL2_Roof
LL7: LL3_Deck
LL8: LL3_Deck Offset
LL9: LL3_Roof

DC DL Structural Components & Attachments
LF: 1
DC1: DC

Load (Row) Number	User's Load ID	Member ID	Joint ID	Fx (kips)	Fy (kips)	Fz (kips)	Mx (ft*kip)	My (ft*kip)	Mz (ft*kip)
1	CR+SH+PT_D10K	741	727	134.9	0	-1.8	0	27.1	0
2	CR+SH+PT_D10K	741	728	-134.9	0	1.8	0	14.2	0
3	CR+SH+PT_D10K	744	729	-207.1	0	1.5	0	-11.8	0
4	CR+SH+PT_D10K	744	730	207.1	0	-1.5	0	-9.9	0
5	CR+SH+PT_D10K	747	731	139.6	0	13.9	0	-55.7	0
6	CR+SH+PT_D10K	747	732	-139.6	0	-13.9	0	-63.2	0
7	CR+SH+PT_D10K	750	733	-300.6	0	4.3	0	-29.1	0
8	CR+SH+PT_D10K	750	734	300.6	0	-4.3	0	-31.8	0
9	CR+SH+PT_D10K	753	735	208.6	0	19.6	0	-75.9	0
10	CR+SH+PT_D10K	753	736	-208.6	0	-19.6	0	-73.5	0
11	CR+SH+PT_D10K	756	737	-316.8	0	4.9	0	-30.7	0
12	CR+SH+PT_D10K	756	738	316.8	0	-4.9	0	-39.6	0
13	CR+SH+PT_D10K	759	739	208.2	0	19.7	0	-72.5	0
14	CR+SH+PT_D10K	759	740	-208.2	0	-19.7	0	-65.7	0
15	CR+SH+PT_D10K	762	741	-197.9	0	3.5	0	-14.1	0
16	CR+SH+PT_D10K	762	742	197.9	0	-3.5	0	-36.7	0
17	CR+SH+PT_D10K	765	743	168.3	0	13.1	0	-41.7	0
18	CR+SH+PT_D10K	765	744	-168.3	0	-13.1	0	-43.8	0
19	CR+SH+PT_D10K	768	745	49.6	0	2.1	0	-2.5	0
20	CR+SH+PT_D10K	768	746	-49.6	0	-2.1	0	-32.5	0
21	CR+SH+PT_D10K	771	747	4.1	0	28.7	0	-8.9	0
22	CR+SH+PT_D10K	771	748	-4.1	0	-28.7	0	-363.2	-0.1

Load (Row) Number	User's Load ID	Member ID	Joint ID	Fx (kips)	Fy (kips)	Fz (kips)	Mx (ft*kip)	My (ft*kip)	Mz (ft*kip)
1	CR+SH+PT_EOC	741	727	175.9	0	-1.6	0	24.4	0
2	CR+SH+PT_EOC	741	728	-175.9	0	1.6	0	11.9	0
3	CR+SH+PT_EOC	744	729	-183.7	0	1.5	0	-11	0
4	CR+SH+PT_EOC	744	730	183.7	0	-1.5	0	-10.8	0
5	CR+SH+PT_EOC	747	731	125.6	0	12.8	0	-52.3	0
6	CR+SH+PT_EOC	747	732	-125.6	0	-12.8	0	-56.9	0
7	CR+SH+PT_EOC	750	733	-247.9	0	3.7	0	-23.6	0
8	CR+SH+PT_EOC	750	734	247.9	0	-3.7	0	-28	0
9	CR+SH+PT_EOC	753	735	173.5	0	17.2	0	-66.3	0
10	CR+SH+PT_EOC	753	736	-173.5	0	-17.2	0	-64.9	0
11	CR+SH+PT_EOC	756	737	-281	0	4.4	0	-28.5	0
12	CR+SH+PT_EOC	756	738	281	0	-4.4	0	-35.1	0
13	CR+SH+PT_EOC	759	739	188.3	0	19.3	0	-69.5	0
14	CR+SH+PT_EOC	759	740	-188.3	0	-19.3	0	-65.7	0
15	CR+SH+PT_EOC	762	741	-259.6	0	4.6	0	-26.8	0
16	CR+SH+PT_EOC	762	742	259.6	0	-4.6	0	-38.4	0
17	CR+SH+PT_EOC	765	743	189.1	0	18.6	0	-62.1	0
18	CR+SH+PT_EOC	765	744	-189.1	0	-18.6	0	-59.2	0
19	CR+SH+PT_EOC	768	745	-214.1	0	4.7	0	-36.3	0
20	CR+SH+PT_EOC	768	746	214.1	0	-4.7	0	-41.1	0
21	CR+SH+PT_EOC	771	747	-4	0	6.9	0	221.9	0.1
22	CR+SH+PT_EOC	771	748	4	0	-6.9	0	-311.8	0
1	DC	741	727	685.6	0	5.4	0	-4.7	0
2	DC	741	728	-679.2	0	4.7	0	-2.8	0
3	DC	744	729	-356.6	0	1.6	0	12.7	0
4	DC	744	730	362.6	0	3.2	0	-1.1	0
5	DC	747	731	68.2	0	4.4	0	-8.5	0
6	DC	747	732	-63.7	0	-4.2	0	-28	0
7	DC	750	733	-66	0	4.2	0	-4	0
8	DC	750	734	71.3	0	1	0	-18.1	0
9	DC	753	735	-29.5	0	-0.4	0	-2.1	0
10	DC	753	736	33.5	0	1.2	0	8	0
11	DC	756	737	109.5	0	0.3	0	24.5	0
12	DC	756	738	-104.4	0	5.3	0	11.2	0
13	DC	759	739	-188	0	-11.2	0	39.1	0
14	DC	759	740	191.5	0	12.4	0	43.5	0
15	DC	762	741	319.8	0	-3.2	0	54	0
16	DC	762	742	-314.9	0	8.9	0	33	0
17	DC	765	743	-254.1	0	-18.9	0	79.3	0.1
18	DC	765	744	257.2	0	20.3	0	48.6	0
19	DC	768	745	517	0	-1	0	47.1	0.1
20	DC	768	746	-511.7	0	7.8	0	25	0
21	DC	771	747	59.1	0	37.6	-0.1	-318.5	-0.3
22	DC	771	748	-48.9	0	-37.6	0.1	-169.2	0
1	DW	741	727	9.9	0	-0.2	0	2.5	0
2	DW	741	728	-9.9	0	0.2	0	1.8	0
3	DW	744	729	-22.4	0	-0.3	0	3	0
4	DW	744	730	22.4	0	0.3	0	1.1	0
5	DW	747	731	-5.2	0	-0.1	0	1.9	0
6	DW	747	732	5.2	0	0.1	0	-1.4	0
7	DW	750	733	-12.3	0	0.2	0	-1.7	0
8	DW	750	734	12.3	0	-0.2	0	-1.4	0
9	DW	753	735	1.5	0	0.6	0	-2.6	0
10	DW	753	736	-1.5	0	-0.6	0	-1.9	0
11	DW	756	737	-17.1	0	0.1	0	-1.1	0
12	DW	756	738	17.1	0	-0.1	0	-0.7	0
13	DW	759	739	0.6	0	0.6	0	-2.2	0
14	DW	759	740	-0.6	0	-0.6	0	-2.1	0
15	DW	762	741	-14	0	0.1	0	-0.8	0
16	DW	762	742	14	0	-0.1	0	-1.1	0
17	DW	765	743	4	0	0.5	0	-1.5	0
18	DW	765	744	-4	0	-0.5	0	-1.6	0
19	DW	768	745	-14.9	0	0.3	0	-3.9	0
20	DW	768	746	14.9	0	-0.3	0	-1.5	0
21	DW	771	747	-0.6	0	-2.6	0	27.8	0
22	DW	771	748	0.6	0	2.6	0	5.9	0

Load (Row) Number	User's Load ID	Member ID	Joint ID	Fx (kips)	Fy (kips)	Fz (kips)	Mx (ft*kip)	My (ft*kip)	Mz (ft*kip)
1	LL1_Deck	741	727	36.1	0	-0.7	0	9.2	0
2	LL1_Deck	741	728	-36.1	0	0.7	0	6.5	0
3	LL1_Deck	744	729	-81.9	0	-1	0	10.9	0
4	LL1_Deck	744	730	81.9	0	1	0	3.9	0
5	LL1_Deck	747	731	-18.9	0	-0.2	0	7	0
6	LL1_Deck	747	732	18.9	0	0.2	0	-5	0
7	LL1_Deck	750	733	-44.9	0	0.8	0	-6.4	0
8	LL1_Deck	750	734	44.9	0	-0.8	0	-5.3	0
9	LL1_Deck	753	735	5.6	0	2.1	0	-9.4	0
10	LL1_Deck	753	736	-5.6	0	-2.1	0	-6.8	0
11	LL1_Deck	756	737	-62.7	0	0.5	0	-4.1	0
12	LL1_Deck	756	738	62.7	0	-0.5	0	-2.6	0
13	LL1_Deck	759	739	2.2	0	2.2	0	-8.1	0
14	LL1_Deck	759	740	-2.2	0	-2.2	0	-7.5	0
15	LL1_Deck	762	741	-51.3	0	0.5	0	-3	0
16	LL1_Deck	762	742	51.3	0	-0.5	0	-4	0
17	LL1_Deck	765	743	14.8	0	1.8	0	-5.5	0
18	LL1_Deck	765	744	-14.8	0	-1.8	0	-5.9	0
19	LL1_Deck	768	745	-54.4	0	1.2	0	-14.4	0
20	LL1_Deck	768	746	54.4	0	-1.2	0	-5.4	0
21	LL1_Deck	771	747	-2.3	0	-9.5	0	101.8	0
22	LL1_Deck	771	748	2.3	0	9.5	0	21.6	0
1	LL1_Deck Offset	741	727	18	-0.1	-0.3	-1.7	4.6	0.6
2	LL1_Deck Offset	741	728	-18	0.1	0.3	1.7	3.3	-2.7
3	LL1_Deck Offset	744	729	-40.9	-3.4	-0.5	9.7	5.4	-36.9
4	LL1_Deck Offset	744	730	40.9	3.4	0.5	-9.7	1.9	-11.9
5	LL1_Deck Offset	747	731	-9.4	-5.5	-0.1	0.1	3.5	-51.9
6	LL1_Deck Offset	747	732	9.4	5.5	0.1	-0.1	-2.5	4.7
7	LL1_Deck Offset	750	733	-22.5	-2	0.4	10.6	-3.2	-27.9
8	LL1_Deck Offset	750	734	22.5	2	-0.4	-10.6	-2.6	0
9	LL1_Deck Offset	753	735	2.8	-4.8	1.1	3.4	-4.7	-44.7
10	LL1_Deck Offset	753	736	-2.8	4.8	-1.1	-3.4	-3.4	8.2
11	LL1_Deck Offset	756	737	-31.3	-1.2	0.2	9.1	-2	-19.5
12	LL1_Deck Offset	756	738	31.3	1.2	-0.2	-9.1	-1.3	2.6
13	LL1_Deck Offset	759	739	1.1	-3.6	1.1	4.5	-4	-33
14	LL1_Deck Offset	759	740	-1.1	3.6	-1.1	-4.5	-3.8	7.6
15	LL1_Deck Offset	762	741	-25.6	-0.4	0.2	5.7	-1.5	-10
16	LL1_Deck Offset	762	742	25.6	0.4	-0.2	-5.7	-2	3.5
17	LL1_Deck Offset	765	743	7.4	-1.9	0.9	3.1	-2.7	-17.3
18	LL1_Deck Offset	765	744	-7.4	1.9	-0.9	-3.1	-3	5
19	LL1_Deck Offset	768	745	-27.2	0.5	0.6	0.4	-7.2	3.4
20	LL1_Deck Offset	768	746	27.2	-0.5	-0.6	-0.4	-2.7	4.3
21	LL1_Deck Offset	771	747	-1.1	-1.8	-4.8	-0.7	50.9	-18.4
22	LL1_Deck Offset	771	748	1.1	1.8	4.8	0.7	10.8	-5.3
1	LL1_Roof	741	727	7.2	0	0.1	0	-0.5	0
2	LL1_Roof	741	728	-7.2	0	-0.1	0	-1.3	0
3	LL1_Roof	744	729	-3.9	0	-0.1	0	-0.2	0
4	LL1_Roof	744	730	3.9	0	0.1	0	1.3	0
5	LL1_Roof	747	731	3	0	0.3	0	-1.2	0
6	LL1_Roof	747	732	-3	0	-0.3	0	-1.4	0
7	LL1_Roof	750	733	-7.6	0	0.1	0	-0.8	0
8	LL1_Roof	750	734	7.6	0	-0.1	0	-0.9	0
9	LL1_Roof	753	735	5.2	0	0.4	0	-1.4	0
10	LL1_Roof	753	736	-5.2	0	-0.4	0	-1.3	0
11	LL1_Roof	756	737	-8.4	0	0.1	0	-1	0
12	LL1_Roof	756	738	8.4	0	-0.1	0	-0.8	0
13	LL1_Roof	759	739	5.4	0	0.4	0	-1.6	0
14	LL1_Roof	759	740	-5.4	0	-0.4	0	-1.3	0
15	LL1_Roof	762	741	-8.4	0	0.1	0	-0.8	0
16	LL1_Roof	762	742	8.4	0	-0.1	0	-0.7	0
17	LL1_Roof	765	743	6.5	0	0.5	0	-1.4	0
18	LL1_Roof	765	744	-6.5	0	-0.5	0	-1.9	0
19	LL1_Roof	768	745	-5.5	0	0.2	0	-1.4	0
20	LL1_Roof	768	746	5.5	0	-0.2	0	-1.5	0
21	LL1_Roof	771	747	3.2	0	0.3	0	2.7	0
22	LL1_Roof	771	748	-3.2	0	-0.3	0	-6.4	0

Load (Row) Number	User's Load ID	Member ID	Joint ID	Fx (kips)	Fy (kips)	Fz (kips)	Mx (ft*kip)	My (ft*kip)	Mz (ft*kip)
1	LL2_Deck	741	727	-45.8	0	-0.2	0	1.8	0
2	LL2_Deck	741	728	45.8	0	0.2	0	3.4	0
3	LL2_Deck	744	729	-4.3	0	-0.1	0	-0.5	0
4	LL2_Deck	744	730	4.3	0	0.1	0	1.9	0
5	LL2_Deck	747	731	0.9	0	0.4	0	-1.1	0
6	LL2_Deck	747	732	-0.9	0	-0.4	0	-2.7	0
7	LL2_Deck	750	733	-39.6	0	0.5	0	-5.4	0
8	LL2_Deck	750	734	39.6	0	-0.5	0	-1.6	0
9	LL2_Deck	753	735	27.3	0	2.3	0	-9	0
10	LL2_Deck	753	736	-27.3	0	-2.3	0	-8.7	0
11	LL2_Deck	756	737	-75.8	0	1	0	-9.2	0
12	LL2_Deck	756	738	75.8	0	-1	0	-5	0
13	LL2_Deck	759	739	51.5	0	4.3	0	-15.3	0
14	LL2_Deck	759	740	-51.5	0	-4.3	0	-14.7	0
15	LL2_Deck	762	741	-104.1	0	1.6	0	-13.3	0
16	LL2_Deck	762	742	104.1	0	-1.6	0	-9.2	0
17	LL2_Deck	765	743	68	0	5.3	0	-20.3	0
18	LL2_Deck	765	744	-68	0	-5.3	0	-14.2	0
19	LL2_Deck	768	745	-139.2	0	1.7	0	-20.1	0
20	LL2_Deck	768	746	139.2	0	-1.7	0	-8.6	0
21	LL2_Deck	771	747	-3.7	0	-12.6	0	125.5	0.1
22	LL2_Deck	771	748	3.7	0	12.6	0	37.9	0
1	LL2_Deck Offset	741	727	-22.9	0	-0.1	-0.5	0.9	2.6
2	LL2_Deck Offset	741	728	22.9	0	0.1	0.5	1.7	-2
3	LL2_Deck Offset	744	729	-2.2	-0.6	0	1.1	-0.3	-1.9
4	LL2_Deck Offset	744	730	2.2	0.6	0	-1.1	1	-7
5	LL2_Deck Offset	747	731	0.4	-0.7	0.2	1.8	-0.5	-5.1
6	LL2_Deck Offset	747	732	-0.4	0.7	-0.2	-1.8	-1.3	-1.1
7	LL2_Deck Offset	750	733	-19.8	-0.4	0.2	1.3	-2.7	-2.4
8	LL2_Deck Offset	750	734	19.8	0.4	-0.2	-1.3	-0.8	-3.8
9	LL2_Deck Offset	753	735	13.7	-0.7	1.2	1.8	-4.5	-5.5
10	LL2_Deck Offset	753	736	-13.7	0.7	-1.2	-1.8	-4.4	-0.1
11	LL2_Deck Offset	756	737	-37.9	-0.4	0.5	1.7	-4.6	-3.2
12	LL2_Deck Offset	756	738	37.9	0.4	-0.5	-1.7	-2.5	-2.5
13	LL2_Deck Offset	759	739	25.8	-0.8	2.1	2	-7.6	-6.6
14	LL2_Deck Offset	759	740	-25.8	0.8	-2.1	-2	-7.4	0.9
15	LL2_Deck Offset	762	741	-52.1	-0.4	0.8	2.4	-6.7	-4.5
16	LL2_Deck Offset	762	742	52.1	0.4	-0.8	-2.4	-4.6	-1.8
17	LL2_Deck Offset	765	743	34	-1	2.6	2.6	-10.2	-8.7
18	LL2_Deck Offset	765	744	-34	1	-2.6	-2.6	-7.1	2
19	LL2_Deck Offset	768	745	-69.6	-0.6	0.9	3.4	-10	-7.6
20	LL2_Deck Offset	768	746	69.6	0.6	-0.9	-3.4	-4.3	-1.5
21	LL2_Deck Offset	771	747	-1.9	2.7	-6.3	1.5	62.7	33.2
22	LL2_Deck Offset	771	748	1.9	-2.7	6.3	-1.5	18.9	1.6
1	LL2_Roof	741	727	-6.1	0	0	0	0.4	0
2	LL2_Roof	741	728	6.1	0	0	0	0.5	0
3	LL2_Roof	744	729	-0.4	0	0	0	0	0
4	LL2_Roof	744	730	0.4	0	0	0	0.3	0
5	LL2_Roof	747	731	-0.1	0	0	0	0	0
6	LL2_Roof	747	732	0.1	0	0	0	-0.3	0
7	LL2_Roof	750	733	-4.5	0	0.1	0	-0.6	0
8	LL2_Roof	750	734	4.5	0	-0.1	0	-0.2	0
9	LL2_Roof	753	735	3.2	0	0.3	0	-1.1	0
10	LL2_Roof	753	736	-3.2	0	-0.3	0	-1	0
11	LL2_Roof	756	737	-9	0	0.1	0	-1.1	0
12	LL2_Roof	756	738	9	0	-0.1	0	-0.6	0
13	LL2_Roof	759	739	6.1	0	0.5	0	-1.8	0
14	LL2_Roof	759	740	-6.1	0	-0.5	0	-1.8	0
15	LL2_Roof	762	741	-12.5	0	0.2	0	-1.6	0
16	LL2_Roof	762	742	12.5	0	-0.2	0	-1.1	0
17	LL2_Roof	765	743	8.1	0	0.6	0	-2.5	0
18	LL2_Roof	765	744	-8.1	0	-0.6	0	-1.7	0
19	LL2_Roof	768	745	-16.9	0	0.2	0	-2.4	0
20	LL2_Roof	768	746	16.9	0	-0.2	0	-1	0
21	LL2_Roof	771	747	-0.5	0	-1.5	0	15.3	0
22	LL2_Roof	771	748	0.5	0	1.5	0	4.6	0

Load (Row) Number	User's Load ID	Member ID	Joint ID	Fx (kips)	Fy (kips)	Fz (kips)	Mx (ft*kip)	My (ft*kip)	Mz (ft*kip)
1	LL3_Deck	741	727	81.9	0	-0.5	0	7.5	0
2	LL3_Deck	741	728	-81.9	0	0.5	0	3.1	0
3	LL3_Deck	744	729	-77.5	0	-0.9	0	11.4	0
4	LL3_Deck	744	730	77.5	0	0.9	0	1.9	0
5	LL3_Deck	747	731	-19.8	0	-0.7	0	8.1	0
6	LL3_Deck	747	732	19.8	0	0.7	0	-2.3	0
7	LL3_Deck	750	733	-5.3	0	0.3	0	-0.9	0
8	LL3_Deck	750	734	5.3	0	-0.3	0	-3.7	0
9	LL3_Deck	753	735	-21.7	0	-0.2	0	-0.4	0
10	LL3_Deck	753	736	21.7	0	0.2	0	1.9	0
11	LL3_Deck	756	737	13.1	0	-0.5	0	5.1	0
12	LL3_Deck	756	738	-13.1	0	0.5	0	2.3	0
13	LL3_Deck	759	739	-49.3	0	-2	0	7.2	0
14	LL3_Deck	759	740	49.3	0	2	0	7.2	0
15	LL3_Deck	762	741	52.8	0	-1.1	0	10.3	0
16	LL3_Deck	762	742	-52.8	0	1.1	0	5.2	0
17	LL3_Deck	765	743	-53.2	0	-3.5	0	14.8	0
18	LL3_Deck	765	744	53.2	0	3.5	0	8.3	0
19	LL3_Deck	768	745	84.8	0	-0.5	0	5.7	0
20	LL3_Deck	768	746	-84.8	0	0.5	0	3.2	0
21	LL3_Deck	771	747	1.4	0	3.1	0	-23.7	-0.1
22	LL3_Deck	771	748	-1.4	0	-3.1	0	-16.3	0
1	LL3_Deck Offset	741	727	40.9	-0.1	-0.2	-1.3	3.7	-2
2	LL3_Deck Offset	741	728	-40.9	0.1	0.2	1.3	1.6	-0.7
3	LL3_Deck Offset	744	729	-38.8	-2.7	-0.5	8.6	5.7	-35
4	LL3_Deck Offset	744	730	38.8	2.7	0.5	-8.6	1	-4.9
5	LL3_Deck Offset	747	731	-9.9	-4.8	-0.3	-1.7	4	-46.8
6	LL3_Deck Offset	747	732	9.9	4.8	0.3	1.7	-1.2	5.8
7	LL3_Deck Offset	750	733	-2.6	-1.5	0.2	9.3	-0.5	-25.5
8	LL3_Deck Offset	750	734	2.6	1.5	-0.2	-9.3	-1.9	3.8
9	LL3_Deck Offset	753	735	-10.9	-4	-0.1	1.7	-0.2	-39.2
10	LL3_Deck Offset	753	736	10.9	4	0.1	-1.7	1	8.3
11	LL3_Deck Offset	756	737	6.6	-0.8	-0.3	7.4	2.5	-16.3
12	LL3_Deck Offset	756	738	-6.6	0.8	0.3	-7.4	1.2	5.1
13	LL3_Deck Offset	759	739	-24.6	-2.8	-1	2.5	3.6	-26.4
14	LL3_Deck Offset	759	740	24.6	2.8	1	-2.5	3.6	6.8
15	LL3_Deck Offset	762	741	26.4	0	-0.5	3.4	5.2	-5.5
16	LL3_Deck Offset	762	742	-26.4	0	0.5	-3.4	2.6	5.3
17	LL3_Deck Offset	765	743	-26.6	-0.9	-1.8	0.5	7.4	-8.7
18	LL3_Deck Offset	765	744	26.6	0.9	1.8	-0.5	4.2	3
19	LL3_Deck Offset	768	745	42.5	1	-0.3	-3	2.8	11
20	LL3_Deck Offset	768	746	-42.5	-1	0.3	3	1.6	5.8
21	LL3_Deck Offset	771	747	0.7	-4.5	1.5	-2.2	-11.9	-51.6
22	LL3_Deck Offset	771	748	-0.7	4.5	-1.5	2.2	-8.2	-6.9
1	LL3_Roof	741	727	13.3	0	0.1	0	-0.9	0
2	LL3_Roof	741	728	-13.3	0	-0.1	0	-1.8	0
3	LL3_Roof	744	729	-3.5	0	-0.1	0	-0.2	0
4	LL3_Roof	744	730	3.5	0	0.1	0	1.1	0
5	LL3_Roof	747	731	3.2	0	0.3	0	-1.1	0
6	LL3_Roof	747	732	-3.2	0	-0.3	0	-1.2	0
7	LL3_Roof	750	733	-3	0	0.1	0	-0.2	0
8	LL3_Roof	750	734	3	0	-0.1	0	-0.7	0
9	LL3_Roof	753	735	2	0	0.1	0	-0.3	0
10	LL3_Roof	753	736	-2	0	-0.1	0	-0.3	0
11	LL3_Roof	756	737	0.6	0	0	0	0.1	0
12	LL3_Roof	756	738	-0.6	0	0	0	-0.2	0
13	LL3_Roof	759	739	-0.7	0	-0.1	0	0.2	0
14	LL3_Roof	759	740	0.7	0	0.1	0	0.4	0
15	LL3_Roof	762	741	4.1	0	-0.1	0	0.8	0
16	LL3_Roof	762	742	-4.1	0	0.1	0	0.4	0
17	LL3_Roof	765	743	-1.7	0	-0.1	0	1	0
18	LL3_Roof	765	744	1.7	0	0.1	0	-0.2	0
19	LL3_Roof	768	745	11.5	0	0	0	1.1	0
20	LL3_Roof	768	746	-11.5	0	0	0	-0.5	0
21	LL3_Roof	771	747	3.6	0	1.8	0	-12.6	0
22	LL3_Roof	771	748	-3.6	0	-1.8	0	-11.1	0

Load (Row) Number	User's Load ID	Member ID	Joint ID	Fx (kips)	Fy (kips)	Fz (kips)	Mx (ft*kip)	My (ft*kip)	Mz (ft*kip)
1	TU-	741	727	-241.7	0	-1.2	0	12.5	0
2	TU-	741	728	241.7	0	1.2	0	13.9	0
3	TU-	744	729	69.5	0	-1.6	0	11.5	0
4	TU-	744	730	-69.5	0	1.6	0	11.3	0
5	TU-	747	731	-63.3	0	-3.2	0	16.5	0
6	TU-	747	732	63.3	0	3.2	0	10.7	0
7	TU-	750	733	33.8	0	-0.5	0	1.1	0
8	TU-	750	734	-33.8	0	0.5	0	5.3	0
9	TU-	753	735	-19.8	0	-0.5	0	2.2	0
10	TU-	753	736	19.8	0	0.5	0	1.3	0
11	TU-	756	737	-23.9	0	0.2	0	-4	0
12	TU-	756	738	23.9	0	-0.2	0	0.9	0
13	TU-	759	739	16	0	2.3	0	-7.2	0
14	TU-	759	740	-16	0	-2.3	0	-8.6	0
15	TU-	762	741	-88.5	0	1.3	0	-13.2	0
16	TU-	762	742	88.5	0	-1.3	0	-5.9	0
17	TU-	765	743	47.2	0	5.3	0	-20.3	0
18	TU-	765	744	-47.2	0	-5.3	0	-14.5	0
19	TU-	768	745	-176.6	0	1.9	0	-22.8	0
20	TU-	768	746	176.6	0	-1.9	0	-8.1	0
21	TU-	771	747	-5.2	0	-15.5	0	151.1	0.1
22	TU-	771	748	5.2	0	15.5	0	50.2	0
1	TU+	741	727	241.7	0	1.2	0	-12.5	0
2	TU+	741	728	-241.7	0	-1.2	0	-13.9	0
3	TU+	744	729	-69.5	0	1.6	0	-11.5	0
4	TU+	744	730	69.5	0	-1.6	0	-11.3	0
5	TU+	747	731	63.3	0	3.2	0	-16.5	0
6	TU+	747	732	-63.3	0	-3.2	0	-10.7	0
7	TU+	750	733	-33.8	0	0.5	0	-1.1	0
8	TU+	750	734	33.8	0	-0.5	0	-5.3	0
9	TU+	753	735	19.8	0	0.5	0	-2.2	0
10	TU+	753	736	-19.8	0	-0.5	0	-1.3	0
11	TU+	756	737	23.9	0	-0.2	0	4	0
12	TU+	756	738	-23.9	0	0.2	0	-0.9	0
13	TU+	759	739	-16	0	-2.3	0	7.2	0
14	TU+	759	740	16	0	2.3	0	8.6	0
15	TU+	762	741	88.5	0	-1.3	0	13.2	0
16	TU+	762	742	-88.5	0	1.3	0	5.9	0
17	TU+	765	743	-47.2	0	-5.3	0	20.3	0
18	TU+	765	744	47.2	0	5.3	0	14.5	0
19	TU+	768	745	176.6	0	-1.9	0	22.8	0
20	TU+	768	746	-176.6	0	1.9	0	8.1	0
21	TU+	771	747	5.2	0	15.5	0	-151.1	-0.1
22	TU+	771	748	-5.2	0	-15.5	0	-50.2	0
1	TU+Temp. Diff.	741	727	377.8	0	1.6	0	-18.9	0
2	TU+Temp. Diff.	741	728	-377.8	0	-1.6	0	-17.5	0
3	TU+Temp. Diff.	744	729	-144.6	0	3.2	0	-22.2	0
4	TU+Temp. Diff.	744	730	144.6	0	-3.2	0	-24.8	0
5	TU+Temp. Diff.	747	731	124.4	0	6.1	0	-30.7	0
6	TU+Temp. Diff.	747	732	-124.4	0	-6.1	0	-21.6	0
7	TU+Temp. Diff.	750	733	-86.8	0	1.2	0	-5	0
8	TU+Temp. Diff.	750	734	86.8	0	-1.2	0	-11.3	0
9	TU+Temp. Diff.	753	735	55.7	0	2	0	-8.8	0
10	TU+Temp. Diff.	753	736	-55.7	0	-2	0	-6.7	0
11	TU+Temp. Diff.	756	737	20.3	0	-0.1	0	5.1	0
12	TU+Temp. Diff.	756	738	-20.3	0	0.1	0	-4.3	0
13	TU+Temp. Diff.	759	739	-13.3	0	-3.3	0	10.1	0
14	TU+Temp. Diff.	759	740	13.3	0	3.3	0	13.4	0
15	TU+Temp. Diff.	762	741	157.9	0	-2.4	0	24.5	0
16	TU+Temp. Diff.	762	742	-157.9	0	2.4	0	9.4	0
17	TU+Temp. Diff.	765	743	-81.2	0	-10	0	38	0
18	TU+Temp. Diff.	765	744	81.2	0	10	0	27.3	0
19	TU+Temp. Diff.	768	745	351.6	0	-3.7	0	45.9	0
20	TU+Temp. Diff.	768	746	-351.6	0	3.7	0	15.4	0
21	TU+Temp. Diff.	771	747	10.6	0	31.5	0	-307.9	-0.1
22	TU+Temp. Diff.	771	748	-10.6	0	-31.5	0	-101.2	0

FIGG	Project: FIU	Date: 2-3-17	Page: 1 Of
	Project Number: 2262.03	Designed: EDL	
	Description: SOUTH VERTICAL POST DESIGN	Checked:	

FREYSSINET HINGE DESIGN CHECKS

COMPRESSION CHECK

CHECK THAT REDUCED SECTION AT HINGE RESISTS AXIAL LOAD GENERATED IN MEMBER

$P = 81K$ (SRV I @ DAY 210) - BEFORE MAKING FULL CONNECTION AT HINGES

$A = 0.9583\,ft \times 1.75\,ft = 1.68\,ft^2$

$\frac{P}{A} = \frac{83K}{1.68\,ft^2} = 49.5\,ksf$

Say, $\sigma_{ALLOW} = 0.45\,f'_c = 0.45\,(8.5\,ksi) = 3.825\,ksi = 550.8\,ksf$

$\frac{P}{A} = 49.5\,ksf \ll \sigma_{ALLOW} = 550.8\,ksf \quad \therefore \quad OK$ //

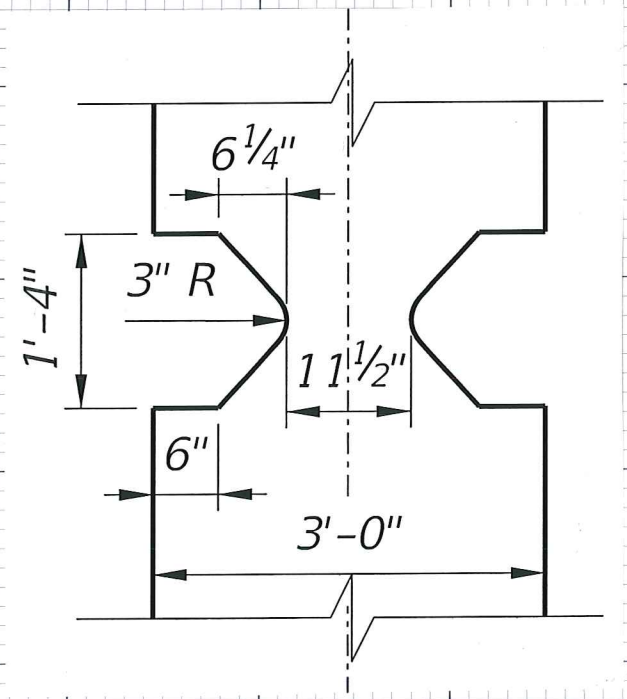

DESIGN FOR TENSION DEVELOPED AT HINGES

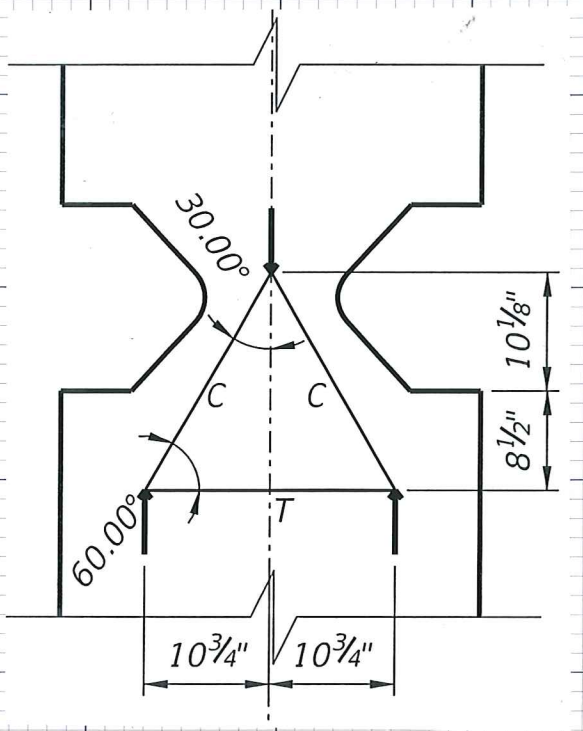

$$R_L = R_R = \frac{P}{2} = \frac{83K}{2} = 41.5\,K$$

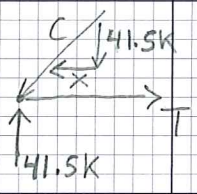

$$\frac{41.5\,K}{18.625\,in} = \frac{x}{10.75\,in}$$

$$x = 24.0\,K$$

$$T = x = 24.0\,K$$

$$A_{s\text{-}REQ} = \frac{24.0K}{0.5(60Ksi)} = 0.80\,in^2$$

PROVIDE 6-#4 LEGS ($A_s = 6 \times 0.2\,in^2 = 1.2\,in^2$) LOCALLY NEXT TO HINGE LOCATIONS

AASHTO Limit State: SRV 1 - SERVICE I

	Max/ Min ID	Combo ID	Fx (kips)	Fy (kips)	Fz (kips)	Mx (ft*kip)	My (ft*kip)	Mz (ft*kip)	Mxy (ft*kip)	Mxz (ft*kip)	Myz (ft*kip)
	Max Fx	SRV 1/ 240	83.1	-1.7	-79.0	-0.9	638.6	-24.2	638.6	24.2	639.0
	Max Fy	SRV 1/ 44	72.1	-1.3	-54.8	-0.6	433.0	-18.9	433.0	18.9	433.4
	Max Fz	SRV 1/ 286	60.6	-1.7	-11.1	-0.9	75.7	-24.2	75.7	24.2	79.5
	Max Mx	SRV 1/ 44	72.1	-1.3	-54.8	-0.6	433.0	-18.9	433.0	18.9	433.4
	Max My	SRV 1/ 238	81.3	-1.7	-95.4	-0.9	826.0	-24.1	826.0	24.1	826.3
Load No.	Max Mz	SRV 1/ 287	60.9	-1.3	-12.1	-0.6	85.6	-18.8	85.6	18.8	87.6
1	Max Mxy	SRV 1/ 238	81.3	-1.7	-95.4	-0.9	826.0	-24.1	826.0	24.1	826.3
	Max Mxz	SRV 1/ 5	74.6	-14.8	-66.6	-5.5	551.1	-189.5	551.1	189.6	582.7
Member	Max Myz	SRV 1/ 238	81.3	-1.7	-95.4	-0.9	826.0	-24.1	826.0	24.1	826.3
702	Min Fx	SRV 1/ 286	60.6	-1.7	-11.1	-0.9	75.7	-24.2	75.7	24.2	79.5
	Min Fy	SRV 1/ 5	74.6	-14.8	-66.6	-5.5	551.1	-189.5	551.1	189.6	582.7
Joint	Min Fz	SRV 1/ 238	81.3	-1.7	-95.4	-0.9	826.0	-24.1	826.0	24.1	826.3
701	Min Mx	SRV 1/ 5	74.6	-14.8	-66.6	-5.5	551.1	-189.5	551.1	189.6	582.7
	Min My	SRV 1/ 286	60.6	-1.7	-11.1	-0.9	75.7	-24.2	75.7	24.2	79.5
	Min Mz	SRV 1/ 5	74.6	-14.8	-66.6	-5.5	551.1	-189.5	551.1	189.6	582.7
	Min Mxy	SRV 1/ 286	60.6	-1.7	-11.1	-0.9	75.7	-24.2	75.7	24.2	79.5
	Min Mxz	SRV 1/ 287	60.9	-1.3	-12.1	-0.6	85.6	-18.8	85.6	18.8	87.6
	Min Myz	SRV 1/ 286	60.6	-1.7	-11.1	-0.9	75.7	-24.2	75.7	24.2	79.5
	Max Fx	SRV 1/ 286	-50.3	1.6	11.3	0.9	70.1	2.3	70.1	2.5	70.2
	Max Fy	SRV 1/ 5	-64.3	14.4	66.7	5.5	322.0	-1.4	322.0	5.7	322.0
	Max Fz	SRV 1/ 238	-71.0	1.6	95.3	0.9	422.9	2.3	422.9	2.5	422.9
	Max Mx	SRV 1/ 5	-64.3	14.4	66.7	5.5	322.0	-1.4	322.0	5.7	322.0
	Max My	SRV 1/ 238	-71.0	1.6	95.3	0.9	422.9	2.3	422.9	2.5	422.9
Load No.	Max Mz	SRV 1/ 1	-66.0	4.2	74.8	2.1	343.9	4.4	343.9	4.8	343.9
2	Max Mxy	SRV 1/ 238	-71.0	1.6	95.3	0.9	422.9	2.3	422.9	2.5	422.9
	Max Mxz	SRV 1/ 5	-64.3	14.4	66.7	5.5	322.0	-1.4	322.0	5.7	322.0
Member	Max Myz	SRV 1/ 238	-71.0	1.6	95.3	0.9	422.9	2.3	422.9	2.5	422.9
702	Min Fx	SRV 1/ 240	-72.8	1.6	78.9	0.9	395.6	2.3	395.6	2.5	395.6
	Min Fy	SRV 1/ 44	-61.8	1.2	55.1	0.6	286.8	1.9	286.8	2.0	286.8
Joint	Min Fz	SRV 1/ 286	-50.3	1.6	11.3	0.9	70.1	2.3	70.1	2.5	70.2
702	Min Mx	SRV 1/ 44	-61.8	1.2	55.1	0.6	286.8	1.9	286.8	2.0	286.8
	Min My	SRV 1/ 286	-50.3	1.6	11.3	0.9	70.1	2.3	70.1	2.5	70.2
	Min Mz	SRV 1/ 38	-63.9	11.4	65.3	4.0	315.9	-3.8	315.9	5.5	315.9
	Min Mxy	SRV 1/ 286	-50.3	1.6	11.3	0.9	70.1	2.3	70.1	2.5	70.2
	Min Mxz	SRV 1/ 44	-61.8	1.2	55.1	0.6	286.8	1.9	286.8	2.0	286.8
	Min Myz	SRV 1/ 286	-50.3	1.6	11.3	0.9	70.1	2.3	70.1	2.5	70.2

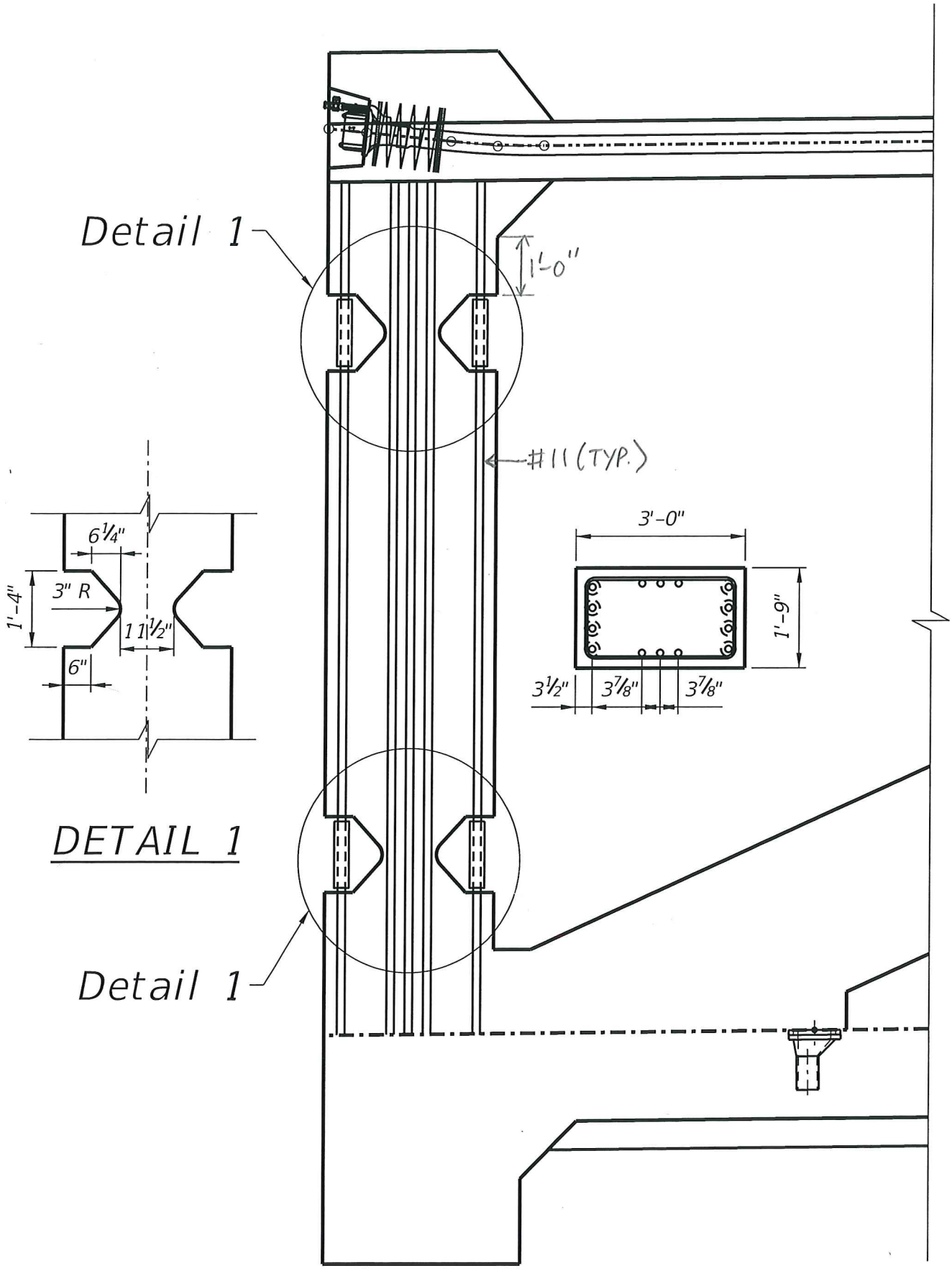

DETAIL 1

PT Column: AASHTO LRFD Column Analysis
Figg Bridge Engineers, Inc.
Short Column Analysis - Individual Load Cases
File Name: South End Vertical Post_SRV_02.07.2017_210.ptc

Service Limit State Strain Criteria

Steel Tensile Strain Limit = 0.00124 => 36 ksi
Concrete Compressive Strain Limit = 0.003

Short Column Analysis - Individual Load Case Results - SRV III							
Load No.	Cross Section ID	P (kips)	Mx (ft*kip)	My (ft*kip)	M (ft*kip)	Mn (ft*kip)	Mn/ M
1	South End Vertical4	81.7	-0.1	-630.4	630.4	781.6	1.240
2	South End Vertical4	61.1	4.2	-91.6	91.7	743.4	8.107
3	South End Vertical4	60.9	-0.1	-83.6	83.6	761.1	9.104
4	South End Vertical4	61.1	4.2	-91.6	91.7	743.4	8.107
5	South End Vertical4	80.3	0.0	-780.3	780.3	780.2	1.000
6	South End Vertical4	61.1	4.2	-91.6	91.7	743.4	8.107
7	South End Vertical4	80.3	0.0	-780.3	780.3	780.2	1.000
8	South End Vertical4	74.2	-102.0	-530.2	539.9	691.9	1.282
9	South End Vertical4	80.3	0.0	-780.3	780.3	780.2	1.000
10	South End Vertical4	60.9	-0.1	-83.6	83.6	761.1	9.104
11	South End Vertical4	63.0	-101.9	-182.8	209.3	570.4	2.725
12	South End Vertical4	80.3	0.0	-780.3	780.3	780.2	1.000
13	South End Vertical4	63.0	-101.9	-182.8	209.3	570.4	2.725
14	South End Vertical4	60.9	-0.1	-83.6	83.6	761.1	9.104
15	South End Vertical4	74.2	-102.0	-530.2	539.9	691.9	1.282
16	South End Vertical4	60.9	-0.1	-83.6	83.6	761.1	9.104
17	South End Vertical4	64.3	0.0	-250.6	250.6	764.4	3.050
18	South End Vertical4	60.9	-0.1	-83.6	83.6	761.1	9.104
19	South End Vertical4	50.6	0.0	74.1	74.1	750.9	10.133
20	South End Vertical4	52.7	4.6	103.1	103.2	735.7	7.129
21	South End Vertical4	70.0	0.0	408.7	408.7	770.0	1.884
22	South End Vertical4	52.7	4.6	103.1	103.2	735.7	7.129
23	South End Vertical4	70.0	0.0	408.7	408.7	770.0	1.884
24	South End Vertical4	54.0	0.0	120.6	120.6	754.2	6.254
25	South End Vertical4	70.0	0.0	408.7	408.7	770.0	1.884
26	South End Vertical4	52.5	4.9	100.3	100.4	733.5	7.304
27	South End Vertical4	70.0	0.0	408.7	408.7	770.0	1.884
28	South End Vertical4	71.4	0.0	386.8	386.8	771.4	1.994
29	South End Vertical4	50.8	0.3	77.0	77.0	751.1	9.754
30	South End Vertical4	50.6	0.0	74.1	74.1	750.9	10.133
31	South End Vertical4	50.8	0.3	77.0	77.0	751.1	9.754
32	South End Vertical4	50.6	0.0	74.1	74.1	750.9	10.133
33	South End Vertical4	52.5	4.9	100.3	100.4	733.5	7.304
34	South End Vertical4	50.6	0.0	74.1	74.1	750.9	10.133
35	South End Vertical4	54.0	0.0	120.6	120.6	754.2	6.254
36	South End Vertical4	50.6	0.0	74.1	74.1	750.9	10.133

MIN C/D = 1.00

Section ID: South End Vertical4

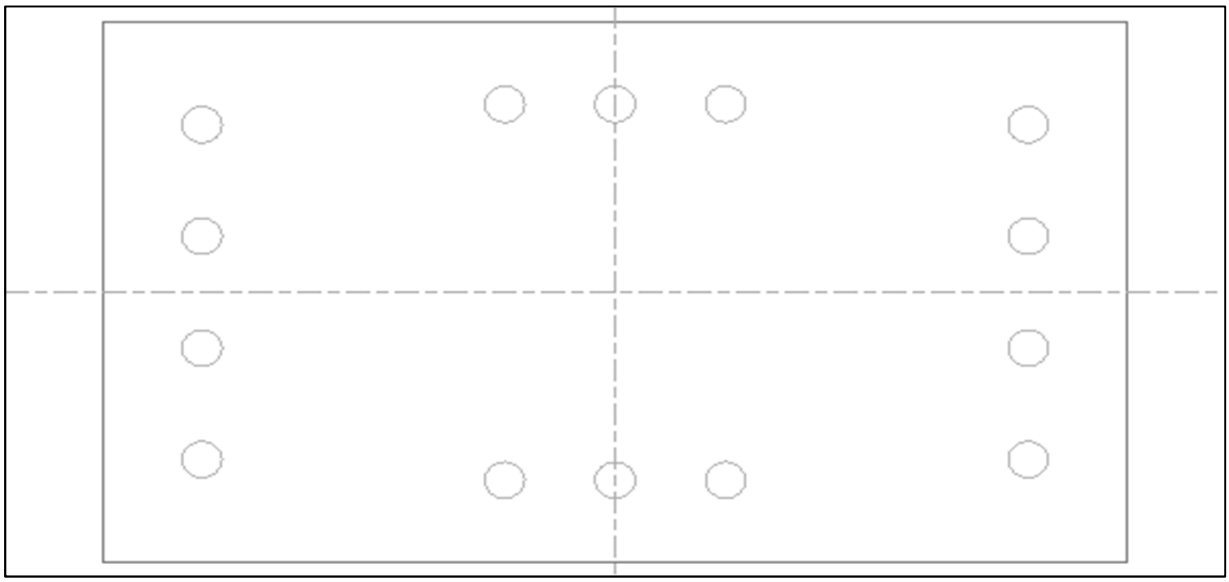

Material Properties

f'c (ksi)	= 8.5	Strain @ Ult.	= 0.003
f''c (ksi)	= 7.12	Strain @ Max.	= 0.0024
fy (ksi)	= 60	E Conc. (ksi)	= 4781
fr (ksi)	= 0.7	E Rebar (ksi)	= 29000
Tendon fpu (ksi)	= 270	E Tendon (ksi)	= 28500
PT Bar fpu (ksi)	= 150	E PT Bar (ksi)	= 30000
Gamma	= 0.15		

Section Properties

Ix (in^4)	= 27295	Iy (in^4)	= 75460
Y top (in)	= 10.5	X lft (in)	= 18
Y bot (in)	= 10.5	X rgt (in)	= 18
Area (in^2)	= 756	Ixy (in^4)	= 0

Cross Section Coordinates

** Exterior Boundary Coordinates **

Point No.	X (in)	Y (in)	Point No.	X (in)	Y (in)
1	-18	10.5	2	18	10.5
3	18	-10.5	4	-18	-10.5

Rebar Information

Bar No.	X (in)	Y (in)	Dia. (in)	Area (in^2)
1	0	7.29	1.41	1.56
2	0	-7.3	1.41	1.56
3	-3.87	7.29	1.41	1.56
4	-3.87	-7.3	1.41	1.56
5	-14.5	6.5	1.41	1.56
6	-14.5	-6.5	1.41	1.56
7	-14.5	2.17	1.41	1.56
8	-14.5	-2.17	1.41	1.56
9	14.5	6.5	1.41	1.56
10	14.5	-6.5	1.41	1.56
11	14.5	2.17	1.41	1.56
12	14.5	-2.17	1.41	1.56
13	3.88	7.29	1.41	1.56
14	3.88	-7.3	1.41	1.56

PT Column: AASHTO LRFD Column Analysis
Figg Bridge Engineers, Inc.
Short Column Analysis - Individual Load Cases
File Name: South End Vertical Post_STR_02.07.2017_210.ptc

Short Column Analysis - Individual Load Case Results

Load No.	Combo ID	Cross Section ID	Pu (kips)	Mux (ft*kip)	Muy (ft*kip)	Mu (ft*kip)	ϕMn (ft*kip)	ϕMn/Mu
1	STR 1/ 50	South End Vertical4	102.2	-0.1	-617.2	617.2	1581.9	2.563
2	STR 1/ 9	South End Vertical4	77.9	9.3	-132.2	132.5	1523.8	11.498
3	STR 3/ 70	South End Vertical4	67.9	-481.6	-16.6	481.9	837.6	1.738
4	STR 1/ 9	South End Vertical4	77.9	9.3	-132.2	132.5	1523.8	11.498
5	STR 1/ 47	South End Vertical4	99.0	0.1	-945.1	945.1	1578.6	1.670
6	STR 1/ 9	South End Vertical4	77.9	9.3	-132.2	132.5	1523.8	11.498
7	STR 1/ 47	South End Vertical4	99.0	0.1	-945.1	945.1	1578.6	1.670
8	STR 3/ 160	South End Vertical4	57.9	-481.7	-408.0	631.3	956.2	1.515
9	STR 1/ 47	South End Vertical4	99.0	0.1	-945.1	945.1	1578.6	1.670
10	STR 3/ 190	South End Vertical4	45.8	-481.6	-16.6	481.9	824.8	1.712
11	STR 3/ 10	South End Vertical4	68.7	-481.6	-60.6	485.4	836.8	1.724
12	STR 1/ 47	South End Vertical4	99.0	0.1	-945.1	945.1	1578.6	1.670
13	STR 3/ 130	South End Vertical4	46.7	-481.6	-60.6	485.4	824.4	1.698
14	STR 3/ 70	South End Vertical4	67.9	-481.6	-16.6	481.9	837.6	1.738
15	STR 3/ 40	South End Vertical4	79.9	-481.7	-408.0	631.3	968.8	1.535
16	STR 3/ 70	South End Vertical4	67.9	-481.6	-16.6	481.9	837.6	1.738
17	STR 1/ 55	South End Vertical4	62.9	0.0	-480.1	480.1	1540.9	3.210
18	STR 1/ 111	South End Vertical4	76.5	-0.2	-70.9	70.9	1555.2	21.936
19	STR 3/ 190	South End Vertical4	36.6	-59.4	27.4	65.4	856.2	13.088
20	STR 3/ 10	South End Vertical4	55.9	-59.4	39.2	71.2	908.1	12.760
21	STR 1/ 47	South End Vertical4	86.1	0.0	447.4	447.4	1565.3	3.499
22	STR 3/ 130	South End Vertical4	37.4	-59.4	39.2	71.2	897.5	12.610
23	STR 1/ 47	South End Vertical4	86.1	0.0	447.4	447.4	1565.3	3.499
24	STR 3/ 10	South End Vertical4	55.9	-59.4	39.2	71.2	908.1	12.760
25	STR 1/ 47	South End Vertical4	86.1	0.0	447.4	447.4	1565.3	3.499
26	STR 3/ 130	South End Vertical4	37.4	-59.4	39.2	71.2	897.5	12.610
27	STR 1/ 47	South End Vertical4	86.1	0.0	447.4	447.4	1565.3	3.499
28	STR 1/ 50	South End Vertical4	89.3	0.0	399.6	399.6	1568.6	3.925
29	STR 1/ 9	South End Vertical4	65.0	0.7	91.7	91.7	1543.2	16.828
30	STR 3/ 70	South End Vertical4	55.0	-59.4	27.4	65.4	866.6	13.248
31	STR 1/ 9	South End Vertical4	65.0	0.7	91.7	91.7	1543.2	16.828
32	STR 3/ 70	South End Vertical4	55.0	-59.4	27.4	65.4	866.6	13.248
33	STR 1/ 7	South End Vertical4	68.7	10.7	142.6	143.0	1512.0	10.573
34	STR 3/ 70	South End Vertical4	55.0	-59.4	27.4	65.4	866.6	13.248
35	STR 1/ 55	South End Vertical4	53.6	0.0	187.1	187.1	1531.1	8.183
36	STR 3/ 70	South End Vertical4	55.0	-59.4	27.4	65.4	866.6	13.248

MIN C/D = 1.51

Section ID: South End Vertical4

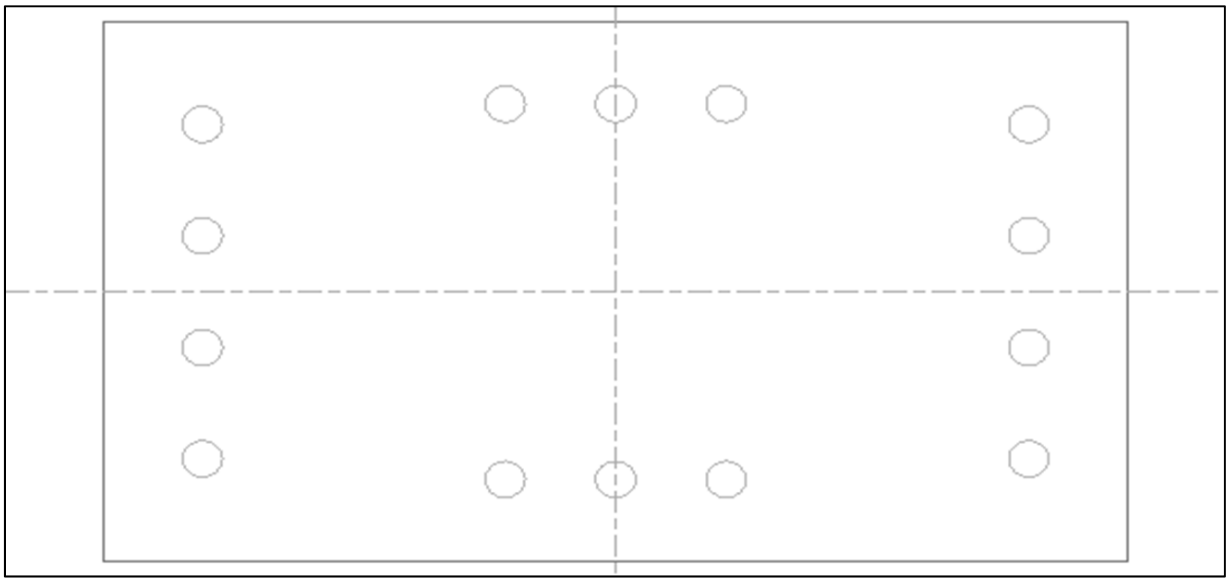

Material Properties

f'c (ksi)	8.5	Strain @ Ult.	0.003
f''c (ksi)	7.12	Strain @ Max.	0.0024
fy (ksi)	60	E Conc. (ksi)	4781
fr (ksi)	0.7	E Rebar (ksi)	29000
Tendon fpu (ksi)	270	E Tendon (ksi)	28500
PT Bar fpu (ksi)	150	E PT Bar (ksi)	30000
Gamma	0.15		

Section Properties

Ix (in^4)	27295	Iy (in^4)	75460
Y top (in)	10.5	X lft (in)	18
Y bot (in)	10.5	X rgt (in)	18
Area (in^2)	756	Ixy (in^4)	0

Cross Section Coordinates

** Exterior Boundary Coordinates **

Point No.	X (in)	Y (in)	Point No.	X (in)	Y (in)
1	-18	10.5	2	18	10.5
3	18	-10.5	4	-18	-10.5

Rebar Information

Bar No.	X (in)	Y (in)	Dia. (in)	Area (in^2)
1	0	7.29	1.41	1.56
2	0	-7.3	1.41	1.56
3	-3.87	7.29	1.41	1.56
4	-3.87	-7.3	1.41	1.56
5	-14.5	6.5	1.41	1.56
6	-14.5	-6.5	1.41	1.56
7	-14.5	2.17	1.41	1.56
8	-14.5	-2.17	1.41	1.56
9	14.5	6.5	1.41	1.56
10	14.5	-6.5	1.41	1.56
11	14.5	2.17	1.41	1.56
12	14.5	-2.17	1.41	1.56
13	3.88	7.29	1.41	1.56
14	3.88	-7.3	1.41	1.56

Figg Bridge Engineers, Inc.	Project: FIU - Pedestrian Bridge			Creating Bridges as Art
Tallahassee Denver Philadelphia Dallas	Designed: EDL	Project No.: 2262.03	Sheet: of	
	Checked:	Date: 05-Oct-16		

Checking Buckling in Diagonals (AASHTO LRFD 4.5.3.2.2b-5)

f'c = 8.5 ksi

E = 4781 ksi

ϕ= 0.75

Section	Unbraced Length (ft)	K	I (ft^4)	P_{cr} (kips)	ϕP_{cr} (kips)	STR I Max. Axial Load (kip)	Check $\phi P_{cr} > P_u$
1	11.73	1.0	3.94	194476	145857	103	OK
2	31.58	1.0	3.94	26822	20116	3149	OK
3	10.15	1.0	1.17	77011	57758	-404	TENSION MEMBER
4	28.73	1.0	1.17	9605	7203	976	OK
5	10.48	1.0	1.17	72189	54142	-65	TENSION MEMBER
6	25.15	1.0	1.17	12537	9403	-221	TENSION MEMBER
7	12.67	1.0	1.17	49409	37056	308	OK
8	20.63	1.0	1.17	18635	13977	-731	TENSION MEMBER
9	17.19	1.0	1.17	26835	20126	1118	OK
10	15.38	1.0	1.17	33535	25151	-891	TENSION MEMBER
11	20.77	1.0	1.17	18375	13781	2341	OK
14	20.67	1.0	1.17	18560	13920	1380	OK
15	13.00	1.0	1.17	46907	35180	-485	TENSION MEMBER
16	8.90	1.0	1.17	100174	75130	289	OK
17	14.38	1.0	1.17	38363	28772	-303	TENSION MEMBER
18	8.15	1.0	1.17	119469	89602	260	OK
19	15.38	1.0	1.17	33535	25151	-120	TENSION MEMBER
20	7.77	1.0	1.17	131278	98458	145	OK
21	16.04	1.0	1.17	30805	23104	364	OK
22	7.56	1.0	1.17	138611	103958	-280	TENSION MEMBER
23	17.19	1.0	1.17	26835	20126	1010	OK
24	10.75	1.0	3.94	231517	173638	89	OK

Sum-It: AASHTO LRFD Load Combination Generator
Figg Bridge Engineers, Inc.
Limit State Summary
File Name: Deck Loads_Main Span_No PT Axial.sum

AASHTO Limit State: STR 1 - STRENGTH I

Max/ Min ID	Load Num	Member Num	Joint Num	Limit State/ Combo ID	Fx (kips)	Fy (kips)	Fz (kips)	Mx (ft*kip)	My (ft*kip)	Mz (ft*kip)	Mxy (ft*kip)	Mxz (ft*kip)	Myz (ft*kip)
Max Fx	30	12	2	STR 1/ 47	4757.2	0.2	-235.1	1.0	-249.6	17.0	249.6	17.0	250.2
Max Fy	1	3	0	STR 1/ 8	815.5	19.7	833.1	-1045.2	-764.8	-21.0	1295.2	1045.4	765.1
Max Fz	4	4	0	STR 1/ 47	1874.2	0.2	1100.3	1.1	-119.4	3.0	119.4	3.2	119.5
Max Mx	72	26	2	STR 1/ 53	1832.5	-41.3	-614.2	1001.5	-590.4	-1390.1	1162.6	1713.3	1510.3
Max My	6	4	2	STR 1/ 20	1280.2	0.2	1005.4	1.0	1252.4	6.4	1252.4	6.4	1252.4
Max Mz	31	13	0	STR 1/ 89	3168.6	-2.3	-23.4	-311.1	-192.6	1078.2	365.9	1122.2	1095.2
Max Mxy	1	3	0	STR 1/ 53	1628.8	19.7	811.4	-1045.1	-1093.2	-20.9	1512.4	1045.3	1093.4
Max Mxz	72	26	2	STR 1/ 133	1214.5	-45.2	-631.0	983.0	-590.9	-1787.4	1147.0	2039.9	1882.6
Max Myz	72	26	2	STR 1/ 79	940.6	-45.1	-632.2	982.8	-766.1	-1782.1	1246.1	2035.1	1939.8
Min Fx	4	4	0	STR 1/ 165	366.5	-0.2	738.8	0.6	101.2	0.7	101.2	0.9	101.2
Min Fy	61	23	0	STR 1/ 7	2282.3	-45.2	-33.3	314.5	-541.7	-77.3	626.3	323.8	547.2
Min Fz	72	26	2	STR 1/ 20	1259.3	0.2	-690.0	0.9	-993.0	43.9	993.0	43.9	993.9
Min Mx	1	3	0	STR 1/ 8	815.5	19.7	833.1	-1045.2	-764.8	-21.0	1295.2	1045.4	765.1
Min My	1	3	0	STR 1/ 47	1901.8	0.3	847.7	-0.2	-1221.3	1.4	1221.3	1.4	1221.3
Min Mz	72	26	2	STR 1/ 133	1214.5	-45.2	-631.0	983.0	-590.9	-1787.4	1147.0	2039.9	1882.6
Min Mxy	30	12	2	STR 1/ 195	2980.1	0.0	-239.3	0.6	-0.1	4.4	0.6	4.4	4.4
Min Mxz	3	3	2	STR 1/ 183	603.0	-0.1	-63.3	-0.3	116.7	0.3	116.7	0.4	116.7
Min Myz	31	13	0	STR 1/ 150	3780.1	0.0	-100.2	1.0	1.1	2.1	1.5	2.4	2.4

Limit State: STRENGTH I

FR Friction
LF: 1
FR1: CR+SH+PT_EOC
FR2: CR+SH+PT_D10K

TU Uniform Temperature
LF: 0.5
TU1: TU-
TU2: TU+
TU3: TU+Temp. Diff.

DW DL Wearing Surfaces & Utilities
LF1: 1.5
LF2: 0.65
DW1: DW

LL Vehicular Live Load
LF: 1.75
LL1: LL1_Deck
LL2: LL2_Deck
LL3: LL3_Deck
LL4: LL1_Roof
LL5: LL2_Roof
LL6: LL3_Roof
LL7: LL1_Deck Offset
LL8: LL2_Deck Offset
LL9: LL3_Deck Offset

DC DL Structural Components & Attachments
LF1: 1.25
LF2: 0.9
DC1: DC

Load (Row) Number	User's Load ID	Member ID	Joint ID	Fx (kips)	Fy (kips)	Fz (kips)	Mx (ft*kip)	My (ft*kip)	Mz (ft*kip)
1	CR+SH+PT_D10K	3	0	1053.3	0.1	842	-0.2	-859.5	1.2
2	CR+SH+PT_D10K	3	1	1054.3	0.1	9.8	-0.2	-105	1.5
3	CR+SH+PT_D10K	3	2	1066.3	0.1	9.8	-0.2	-78.6	1.7
4	CR+SH+PT_D10K	4	0	1066.3	0.1	10	-0.2	-78.6	1.7
5	CR+SH+PT_D10K	4	1	1079.7	0.1	10	-0.2	-20.7	2.3
6	CR+SH+PT_D10K	4	2	1088.8	0.1	10	-0.2	37.1	2.8
7	CR+SH+PT_D10K	5	0	1088.8	0.1	10	-0.2	37.1	2.8
8	CR+SH+PT_D10K	5	1	1098.1	0.1	10	-0.2	94.9	3.4
9	CR+SH+PT_D10K	5	2	1101.2	0.1	10	-0.2	152.7	3.9
10	CR+SH+PT_D10K	6	0	1101.2	0.1	10	-0.2	152.7	3.9
11	CR+SH+PT_D10K	6	1	1102.3	0.1	10	-0.2	160.5	4
12	CR+SH+PT_D10K	6	2	1106.5	0.1	10	-0.2	168.2	4.1
13	CR+SH+PT_D10K	7	0	1129.4	0.1	-102.1	-0.2	305.2	4.1
14	CR+SH+PT_D10K	7	1	1133.3	0.1	-102.1	-0.2	270.5	4.1
15	CR+SH+PT_D10K	7	2	1121.5	0.1	-102.1	-0.2	235.7	4.2
16	CR+SH+PT_D10K	8	0	1075.9	0.1	-8.1	-0.1	213.4	4.1
17	CR+SH+PT_D10K	8	1	1065.1	0.1	-8.1	-0.1	193.5	4.4
18	CR+SH+PT_D10K	8	2	1068	0.1	-8.1	-0.1	173.7	4.6
19	CR+SH+PT_D10K	9	0	1068	0.1	-8.3	-0.1	173.7	4.6
20	CR+SH+PT_D10K	9	1	1072.4	0.1	-8.3	-0.1	122.6	5.2
21	CR+SH+PT_D10K	9	2	1077.3	0.1	-8.3	-0.1	71.6	5.8
22	CR+SH+PT_D10K	10	0	1077.3	0.1	-8.2	-0.1	71.6	5.8
23	CR+SH+PT_D10K	10	1	1082.2	0.1	-8.2	-0.1	20.8	6.4
24	CR+SH+PT_D10K	10	2	1085.1	0.1	-8.2	-0.1	-29.9	7
25	CR+SH+PT_D10K	11	0	1085.1	0.1	-8.2	-0.1	-29.9	7
26	CR+SH+PT_D10K	11	1	1085.7	0.1	-8.2	-0.1	-36.7	7.1
27	CR+SH+PT_D10K	11	2	1086.5	0.1	-8.2	-0.1	-43.5	7.2
28	CR+SH+PT_D10K	12	0	1086.1	0.1	-153.9	-0.1	157.7	7.2
29	CR+SH+PT_D10K	12	1	1086.6	0.1	-153.9	-0.1	106.1	7.2
30	CR+SH+PT_D10K	12	2	1096	0.1	-153.9	-0.1	54.6	7.3
31	CR+SH+PT_D10K	13	0	963.4	0.1	-1.9	0	34.1	7.2
32	CR+SH+PT_D10K	13	1	973.3	0.1	-1.9	0	29.9	7.5
33	CR+SH+PT_D10K	13	2	974.6	0.1	-1.9	0	25.8	7.7
34	CR+SH+PT_D10K	14	0	974.6	0.1	-1.9	0	25.8	7.7
35	CR+SH+PT_D10K	14	1	977.7	0.1	-1.9	0	13.2	8.3
36	CR+SH+PT_D10K	14	2	979.8	0.1	-1.9	0	0.5	9
37	CR+SH+PT_D10K	15	0	979.8	0.1	-2	0	0.5	9
38	CR+SH+PT_D10K	15	1	982.1	0.1	-2	0	-12.9	9.7
39	CR+SH+PT_D10K	15	2	984.9	0.1	-2	0	-26.4	10.4
40	CR+SH+PT_D10K	16	0	984.9	0.1	-1.9	0	-26.4	10.4
41	CR+SH+PT_D10K	16	1	985.3	0.1	-1.9	0	-27.9	10.4
42	CR+SH+PT_D10K	16	2	989.5	0.1	-1.9	0	-29.4	10.5
43	CR+SH+PT_D10K	17	0	964.2	0.1	-147.2	0	112.3	10.5
44	CR+SH+PT_D10K	17	1	968.1	0.1	-147.2	0	63	10.6
45	CR+SH+PT_D10K	17	2	989.8	0.1	-147.2	0	13.7	10.6
46	CR+SH+PT_D10K	18	0	900.9	0.1	-2.8	0	-2.6	10.6
47	CR+SH+PT_D10K	18	1	923.2	0.1	-2.8	0	-7.4	10.8
48	CR+SH+PT_D10K	18	2	923.7	0.1	-2.8	0	-12.2	10.9
49	CR+SH+PT_D10K	19	0	923.7	0.1	-2.8	0	-12.2	10.9
50	CR+SH+PT_D10K	19	1	926.6	0.1	-2.8	0	-32.8	11.7
51	CR+SH+PT_D10K	19	2	927.3	0.1	-2.8	0	-53.3	12.5
52	CR+SH+PT_D10K	20	0	927.3	0.1	-2.8	0	-53.3	12.5
53	CR+SH+PT_D10K	20	1	928.2	0.1	-2.8	0	-73.9	13.2
54	CR+SH+PT_D10K	20	2	930.7	0.1	-2.8	0	-94.4	14
55	CR+SH+PT_D10K	21	0	930.7	0.1	-2.8	0	-94.4	14
56	CR+SH+PT_D10K	21	1	930.7	0.1	-2.8	0	-98	14.1
57	CR+SH+PT_D10K	21	2	947.2	0.1	-2.8	0	-101.6	14.3
58	CR+SH+PT_D10K	22	0	945.2	0.1	-86.9	0.1	-49.6	14.3
59	CR+SH+PT_D10K	22	1	961.3	0.1	-86.9	0.1	-78.7	14.3
60	CR+SH+PT_D10K	22	2	981.7	0.1	-86.9	0.1	-107.8	14.4
61	CR+SH+PT_D10K	23	0	978.8	0.1	13.8	0.1	-177	14.3
62	CR+SH+PT_D10K	23	1	999.6	0.1	13.8	0.1	-160.8	14.5
63	CR+SH+PT_D10K	23	2	1000.3	0.1	13.8	0.1	-144.6	14.6
64	CR+SH+PT_D10K	24	0	1000.3	0.1	13.8	0.1	-144.6	14.6
65	CR+SH+PT_D10K	24	1	1003.9	0.1	13.8	0.1	-36.3	15.4
66	CR+SH+PT_D10K	24	2	1001.7	0.1	13.8	0.1	72.1	16.3
67	CR+SH+PT_D10K	25	0	1001.7	0.1	13.8	0.1	72.1	16.3
68	CR+SH+PT_D10K	25	1	995.8	0.1	13.8	0.1	180.5	17.2
69	CR+SH+PT_D10K	25	2	992.2	0.1	13.8	0.1	289	18
70	CR+SH+PT_D10K	26	0	992.2	0.1	13.8	0.1	289	18
71	CR+SH+PT_D10K	26	1	991.1	0.1	13.8	0.1	316.8	18.2
72	CR+SH+PT_D10K	26	2	879.9	0.1	-502.4	0.1	-354.6	18.4

Load (Row) Number	User's Load ID	Member ID	Joint ID	Fx (kips)	Fy (kips)	Fz (kips)	Mx (ft*kip)	My (ft*kip)	Mz (ft*kip)
1	CR+SH+PT_EOC	3	0	447	0.1	868.9	-0.3	-613.5	0.8
2	CR+SH+PT_EOC	3	1	447.8	0.1	-4.3	-0.3	138.7	1.1
3	CR+SH+PT_EOC	3	2	456.3	0.1	-4.3	-0.3	127	1.3
4	CR+SH+PT_EOC	4	0	456.3	0.1	-4.1	-0.3	127	1.3
5	CR+SH+PT_EOC	4	1	465.6	0.1	-4.1	-0.3	103.2	1.9
6	CR+SH+PT_EOC	4	2	471.5	0.1	-4.1	-0.3	79.3	2.4
7	CR+SH+PT_EOC	5	0	471.5	0.1	-4.1	-0.3	79.3	2.4
8	CR+SH+PT_EOC	5	1	477.5	0.1	-4.1	-0.3	55.5	2.9
9	CR+SH+PT_EOC	5	2	479.3	0.1	-4.1	-0.3	31.7	3.5
10	CR+SH+PT_EOC	6	0	479.3	0.1	-4.1	-0.3	31.7	3.5
11	CR+SH+PT_EOC	6	1	479.9	0.1	-4.1	-0.3	28.5	3.5
12	CR+SH+PT_EOC	6	2	482.7	0.1	-4.1	-0.3	25.4	3.6
13	CR+SH+PT_EOC	7	0	497.1	0.1	-115.9	-0.3	223.7	3.6
14	CR+SH+PT_EOC	7	1	499.7	0.1	-115.9	-0.3	184.3	3.6
15	CR+SH+PT_EOC	7	2	493.5	0.1	-115.9	-0.3	144.9	3.7
16	CR+SH+PT_EOC	8	0	413.2	0.1	-5.2	-0.2	130.8	3.7
17	CR+SH+PT_EOC	8	1	407.6	0.1	-5.2	-0.2	118.1	3.9
18	CR+SH+PT_EOC	8	2	409.3	0.1	-5.2	-0.2	105.3	4.1
19	CR+SH+PT_EOC	9	0	409.3	0.1	-5.4	-0.2	105.3	4.1
20	CR+SH+PT_EOC	9	1	412	0.1	-5.4	-0.2	71.9	4.7
21	CR+SH+PT_EOC	9	2	415.2	0.1	-5.4	-0.2	38.4	5.3
22	CR+SH+PT_EOC	10	0	415.2	0.1	-5.4	-0.2	38.4	5.3
23	CR+SH+PT_EOC	10	1	418.3	0.1	-5.4	-0.2	5.4	5.8
24	CR+SH+PT_EOC	10	2	420.1	0.1	-5.4	-0.2	-27.6	6.4
25	CR+SH+PT_EOC	11	0	420.1	0.1	-5.4	-0.2	-27.6	6.4
26	CR+SH+PT_EOC	11	1	420.6	0.1	-5.4	-0.2	-32.1	6.5
27	CR+SH+PT_EOC	11	2	421.2	0.1	-5.4	-0.2	-36.5	6.6
28	CR+SH+PT_EOC	12	0	421.4	0.1	-128.5	-0.2	155.9	6.6
29	CR+SH+PT_EOC	12	1	421.8	0.1	-128.5	-0.2	112.8	6.6
30	CR+SH+PT_EOC	12	2	428.4	0.1	-128.5	-0.2	69.7	6.6
31	CR+SH+PT_EOC	13	0	340.1	0.1	-2.2	-0.2	50.5	6.6
32	CR+SH+PT_EOC	13	1	347.1	0.1	-2.2	-0.2	45.7	6.8
33	CR+SH+PT_EOC	13	2	348	0.1	-2.2	-0.2	40.9	7
34	CR+SH+PT_EOC	14	0	348	0.1	-2.2	-0.2	40.9	7
35	CR+SH+PT_EOC	14	1	350	0.1	-2.2	-0.2	26.3	7.7
36	CR+SH+PT_EOC	14	2	351.4	0.1	-2.2	-0.2	11.7	8.3
37	CR+SH+PT_EOC	15	0	351.4	0.1	-2.3	-0.2	11.7	8.3
38	CR+SH+PT_EOC	15	1	352.9	0.1	-2.3	-0.2	-3.8	9
39	CR+SH+PT_EOC	15	2	354.6	0.1	-2.3	-0.2	-19.2	9.6
40	CR+SH+PT_EOC	16	0	354.6	0.1	-2.2	-0.2	-19.2	9.6
41	CR+SH+PT_EOC	16	1	354.9	0.1	-2.2	-0.2	-21	9.7
42	CR+SH+PT_EOC	16	2	357.8	0.1	-2.2	-0.2	-22.7	9.8
43	CR+SH+PT_EOC	17	0	344.8	0.1	-116.6	-0.1	111.6	9.8
44	CR+SH+PT_EOC	17	1	347.5	0.1	-116.6	-0.1	72.5	9.8
45	CR+SH+PT_EOC	17	2	362.4	0.1	-116.6	-0.1	33.5	9.9
46	CR+SH+PT_EOC	18	0	313.2	0.1	-2	-0.1	11.9	9.8
47	CR+SH+PT_EOC	18	1	328.4	0.1	-2	-0.1	8.5	10
48	CR+SH+PT_EOC	18	2	328.8	0.1	-2	-0.1	5.1	10.2
49	CR+SH+PT_EOC	19	0	328.8	0.1	-2	-0.1	5.1	10.2
50	CR+SH+PT_EOC	19	1	330.6	0.1	-2	-0.1	-9.2	10.9
51	CR+SH+PT_EOC	19	2	330.9	0.1	-2	-0.1	-23.6	11.6
52	CR+SH+PT_EOC	20	0	330.9	0.1	-2	-0.1	-23.6	11.6
53	CR+SH+PT_EOC	20	1	331.3	0.1	-2	-0.1	-38	12.4
54	CR+SH+PT_EOC	20	2	332.7	0.1	-2	-0.1	-52.3	13.1
55	CR+SH+PT_EOC	21	0	332.7	0.1	-2	-0.1	-52.3	13.1
56	CR+SH+PT_EOC	21	1	332.7	0.1	-2	-0.1	-54.9	13.2
57	CR+SH+PT_EOC	21	2	344.3	0.1	-2	-0.1	-57.4	13.4
58	CR+SH+PT_EOC	22	0	348.7	0.1	-79.1	-0.1	-2.3	13.4
59	CR+SH+PT_EOC	22	1	360.1	0.1	-79.1	-0.1	-28.8	13.4
60	CR+SH+PT_EOC	22	2	374.3	0.1	-79.1	-0.1	-55.3	13.5
61	CR+SH+PT_EOC	23	0	379	0.1	11.1	0	-122	13.4
62	CR+SH+PT_EOC	23	1	393.4	0.1	11.1	0	-109	13.6
63	CR+SH+PT_EOC	23	2	393.8	0.1	11.1	0	-96.1	13.7
64	CR+SH+PT_EOC	24	0	393.8	0.1	11.1	0	-96.1	13.7
65	CR+SH+PT_EOC	24	1	395.9	0.1	11.1	0	-9.2	14.5
66	CR+SH+PT_EOC	24	2	394.2	0.1	11.1	0	77.8	15.3
67	CR+SH+PT_EOC	25	0	394.2	0.1	11.1	0	77.8	15.3
68	CR+SH+PT_EOC	25	1	390.3	0.1	11.1	0	164.7	16.2
69	CR+SH+PT_EOC	25	2	387.7	0.1	11.1	0	251.7	17
70	CR+SH+PT_EOC	26	0	387.7	0.1	11.1	0	251.7	17
71	CR+SH+PT_EOC	26	1	386.7	0.1	11.1	0	274	17.2
72	CR+SH+PT_EOC	26	2	313	0.1	-531.7	0	-438.8	17.4

Load (Row) Number	User's Load ID	Member ID	Joint ID	Fx (kips)	Fy (kips)	Fz (kips)	Mx (ft*kip)	My (ft*kip)	Mz (ft*kip)
1	DC	3	0	41.1	0	-69.4	0	-0.6	0.1
2	DC	3	1	41.1	0	-71.3	0	1.9	0.1
3	DC	3	2	41.1	0	-73.2	0	1.4	0.1
4	DC	4	0	8.4	-0.1	823.7	1	-75.7	0
5	DC	4	1	8.4	-0.1	818.4	1	292.2	0
6	DC	4	2	8.5	-0.1	813.1	1	645.4	0
7	DC	5	0	1664	-0.1	78	0.9	404.4	0
8	DC	5	1	1664.2	-0.1	57.1	0.9	578.1	-0.1
9	DC	5	2	1664.4	-0.1	36.3	0.9	688.3	-0.3
10	DC	6	0	1664.4	-0.1	36.3	0.9	688.3	-0.3
11	DC	6	1	1664.8	-0.1	-3.8	0.9	815.5	-0.7
12	DC	6	2	1665.2	-0.1	-43.8	0.9	712	-1
13	DC	7	0	1659.9	-0.1	-26.3	0.9	707.4	-1
14	DC	7	1	1660.3	-0.1	-66.2	0.9	382.7	-1.4
15	DC	7	2	1660.7	-0.1	-106	0.9	-172.2	-1.8
16	DC	8	0	1668.9	-0.1	-110	0.9	-173.3	-1.8
17	DC	8	1	1668.9	-0.1	-116.3	0.9	-251.3	-1.8
18	DC	8	2	1669	-0.1	-122.6	0.9	-335.9	-1.9
19	DC	9	0	1510.2	-0.1	445.6	0.8	-597.4	-1.8
20	DC	9	1	1510.2	-0.1	440.9	0.8	-429.1	-1.8
21	DC	9	2	1510.3	-0.1	436.1	0.8	-276.5	-1.8
22	DC	10	0	2156.6	-0.1	111.4	0.8	-281.9	-1.8
23	DC	10	1	2156.8	-0.1	92.1	0.8	-38.5	-1.9
24	DC	10	2	2157	-0.1	72.8	0.8	148.4	-2
25	DC	11	0	2157	-0.1	72.8	0.8	148.4	-2
26	DC	11	1	2157.4	-0.1	30.3	0.8	496.1	-2.4
27	DC	11	2	2157.8	-0.1	-12.3	0.8	583.6	-2.8
28	DC	12	0	2157.6	-0.1	-5.1	0.8	584	-2.8
29	DC	12	1	2158	-0.1	-47.4	0.8	416.4	-3.2
30	DC	12	2	2158.4	-0.1	-89.8	0.8	-11.5	-3.6
31	DC	13	0	2149.1	-0.1	-84.4	0.8	-12.8	-3.6
32	DC	13	1	2149.2	-0.1	-90.9	0.8	-78	-3.6
33	DC	13	2	2149.3	-0.1	-97.5	0.8	-149.8	-3.6
34	DC	14	0	2159.3	-0.1	137.1	0.7	-265.1	-3.6
35	DC	14	1	2159.3	-0.1	132.1	0.7	-199.9	-3.6
36	DC	14	2	2159.4	-0.1	127.2	0.7	-153.4	-3.6
37	DC	15	0	2189.9	-0.1	103.3	0.7	-163.8	-3.6
38	DC	15	1	2190.1	-0.1	85.9	0.7	28.5	-3.7
39	DC	15	2	2190.2	-0.1	68.6	0.7	171.5	-3.8
40	DC	16	0	2190.2	-0.1	68.6	0.7	171.5	-3.8
41	DC	16	1	2190.7	-0.1	22.1	0.7	515	-4.2
42	DC	16	2	2191.2	-0.1	-24.5	0.7	546.6	-4.7
43	DC	17	0	2190.3	-0.1	-25.4	0.7	550.7	-4.7
44	DC	17	1	2190.8	-0.1	-71.7	0.7	273.7	-5.1
45	DC	17	2	2191.2	-0.1	-118	0.7	-314.6	-5.5
46	DC	18	0	2171.3	-0.1	-103	0.7	-315.3	-5.5
47	DC	18	1	2171.3	-0.1	-109	0.7	-392.3	-5.6
48	DC	18	2	2171.4	-0.1	-115.1	0.7	-474.7	-5.6
49	DC	19	0	2136.1	-0.1	-194.2	0.7	-407.9	-5.6
50	DC	19	1	2136.2	-0.1	-199.3	0.7	-444.5	-5.6
51	DC	19	2	2136.2	-0.1	-204.5	0.7	-503.1	-5.6
52	DC	20	0	1684.8	-0.1	129.2	0.7	-515.9	-5.5
53	DC	20	1	1685	-0.1	114.6	0.7	-315.9	-5.6
54	DC	20	2	1685.1	-0.1	99.9	0.7	-157.2	-5.7
55	DC	21	0	1685.1	-0.1	99.9	0.7	-157.2	-5.7
56	DC	21	1	1685.6	-0.1	49.2	0.7	426.1	-6.3
57	DC	21	2	1686.1	-0.1	-1.4	0.7	641.6	-6.8
58	DC	22	0	1677.7	-0.1	-10.2	0.7	645.2	-6.8
59	DC	22	1	1678.2	-0.1	-60.4	0.7	497	-7.3
60	DC	22	2	1678.7	-0.1	-110.7	0.7	-18.4	-7.9
61	DC	23	0	1660.1	-0.1	-87.6	0.7	-16.8	-7.9
62	DC	23	1	1660.2	-0.1	-96.9	0.7	-136.7	-8
63	DC	23	2	1660.3	-0.1	-106.2	0.7	-268.5	-8.1
64	DC	24	0	1257.1	-0.1	-536.9	0.7	-154.8	-8
65	DC	24	1	1257.2	-0.1	-542.3	0.7	-300.8	-8
66	DC	24	2	1257.3	-0.1	-547.7	0.7	-471.8	-8
67	DC	25	0	721.7	-0.1	99.5	0.7	-345.5	-8
68	DC	25	1	721.8	-0.1	88.3	0.7	-246	-8
69	DC	25	2	721.9	-0.1	77.2	0.7	-180.3	-8.1
70	DC	26	0	721.9	-0.1	77.2	0.7	-180.3	-8.1
71	DC	26	1	722.5	-0.1	22.8	0.7	249.9	-8.8
72	DC	26	2	723	-0.1	-31.7	0.7	257.9	-9.5

Load (Row) Number	User's Load ID	Member ID	Joint ID	Fx (kips)	Fy (kips)	Fz (kips)	Mx (ft*kip)	My (ft*kip)	Mz (ft*kip)
1	DW	3	0	72.8	0	11.1	0	-37.3	0
2	DW	3	1	72.9	0	9.1	0	-9.9	0.1
3	DW	3	2	72.9	0	7.1	0	12.2	0.1
4	DW	4	0	72.9	0	7.1	0	12.2	0.1
5	DW	4	1	72.9	0	2.9	0	41.2	0.2
6	DW	4	2	73	0	-1.4	0	45.4	0.3
7	DW	5	0	73	0	-1.4	0	45.4	0.3
8	DW	5	1	73	0	-5.7	0	24.8	0.3
9	DW	5	2	73.1	0	-10	0	-20.6	0.4
10	DW	6	0	73.1	0	-10	0	-20.6	0.4
11	DW	6	1	73.1	0	-10.5	0	-28.6	0.4
12	DW	6	2	73.1	0	-11.1	0	-37	0.4
13	DW	7	0	64.3	0	19.9	0	-48.8	0.4
14	DW	7	1	64.3	0	19.6	0	-42.1	0.4
15	DW	7	2	64.3	0	19.4	0	-35.4	0.4
16	DW	8	0	80.8	0	11.3	0	-38.2	0.4
17	DW	8	1	80.8	0	9.5	0	-12.6	0.5
18	DW	8	2	80.8	0	7.7	0	8.6	0.5
19	DW	9	0	80.8	0	7.7	0	8.6	0.5
20	DW	9	1	80.9	0	3.1	0	41.9	0.6
21	DW	9	2	80.9	0	-1.4	0	47.2	0.7
22	DW	10	0	80.9	0	-1.4	0	47.2	0.7
23	DW	10	1	81	0	-6	0	24.5	0.8
24	DW	10	2	81	0	-10.5	0	-26.2	0.9
25	DW	11	0	81	0	-10.5	0	-26.2	0.9
26	DW	11	1	81	0	-11.1	0	-35.2	0.9
27	DW	11	2	81	0	-11.7	0	-44.7	0.9
28	DW	12	0	80.5	0	2.1	0	-43.6	0.9
29	DW	12	1	80.5	0	1.8	0	-43	0.9
30	DW	12	2	80.5	0	1.6	0	-42.4	0.9
31	DW	13	0	63.4	0	11.5	0	-44.6	0.9
32	DW	13	1	63.4	0	10	0	-21.6	0.9
33	DW	13	2	63.4	0	8.4	0	-2	0.9
34	DW	14	0	63.4	0	8.4	0	-2	0.9
35	DW	14	1	63.5	0	3.4	0	37.7	1
36	DW	14	2	63.5	0	-1.6	0	43.8	1.1
37	DW	15	0	63.5	0	-1.6	0	43.8	1.1
38	DW	15	1	63.6	0	-6.6	0	16.4	1.2
39	DW	15	2	63.6	0	-11.5	0	-44.5	1.3
40	DW	16	0	63.6	0	-11.5	0	-44.5	1.3
41	DW	16	1	63.6	0	-12.1	0	-53.8	1.3
42	DW	16	2	63.7	0	-12.7	0	-63.6	1.3
43	DW	17	0	62.2	0	-14.2	0	-56	1.3
44	DW	17	1	62.2	0	-14.5	0	-60.8	1.3
45	DW	17	2	62.2	0	-14.7	0	-65.7	1.4
46	DW	18	0	25.1	0	13	0	-66.9	1.4
47	DW	18	1	25.1	0	11.8	0	-45.6	1.4
48	DW	18	2	25.1	0	10.5	0	-26.5	1.4
49	DW	19	0	25.1	0	10.5	0	-26.5	1.4
50	DW	19	1	25.2	0	5.1	0	30.5	1.5
51	DW	19	2	25.2	0	-0.3	0	48.1	1.6
52	DW	20	0	25.2	0	-0.3	0	48.1	1.6
53	DW	20	1	25.3	0	-5.7	0	26	1.7
54	DW	20	2	25.3	0	-11.1	0	-35.5	1.8
55	DW	21	0	25.3	0	-11.1	0	-35.5	1.8
56	DW	21	1	25.4	0	-12.1	0	-50.5	1.8
57	DW	21	2	25.4	0	-13	0	-66.7	1.9
58	DW	22	0	9.9	0	-29	0	-59.7	1.9
59	DW	22	1	9.9	0	-29.2	0	-69.5	1.9
60	DW	22	2	9.9	0	-29.5	0	-79.3	1.9
61	DW	23	0	-24.8	0	13.3	0	-76.6	1.9
62	DW	23	1	-24.7	0	12.4	0	-61.5	1.9
63	DW	23	2	-24.7	0	11.6	0	-47.5	1.9
64	DW	24	0	-24.7	0	11.6	0	-47.5	1.9
65	DW	24	1	-24.7	0	5.8	0	20.5	2
66	DW	24	2	-24.6	0	0	0	43.2	2.1
67	DW	25	0	-24.6	0	0	0	43.2	2.1
68	DW	25	1	-24.6	0	-5.8	0	20.6	2.3
69	DW	25	2	-24.5	0	-11.6	0	-47.4	2.4
70	DW	26	0	-24.5	0	-11.6	0	-47.4	2.4
71	DW	26	1	-24.5	0	-13	0	-72.1	2.4
72	DW	26	2	-24.5	0	-14.5	0	-99.9	2.4

Load (Row) Number	User's Load ID	Member ID	Joint ID	Fx (kips)	Fy (kips)	Fz (kips)	Mx (ft*kip)	My (ft*kip)	Mz (ft*kip)
1	LL1_Deck	3	0	266.5	0.1	40.8	0	-136.6	0.1
2	LL1_Deck	3	1	266.6	0.1	33.5	0	-36.1	0.2
3	LL1_Deck	3	2	266.6	0.1	26.1	0	44.5	0.3
4	LL1_Deck	4	0	266.6	0.1	26.1	0	44.5	0.3
5	LL1_Deck	4	1	266.8	0.1	10.5	0	150.7	0.6
6	LL1_Deck	4	2	267	0.1	-5.2	0	166	0.9
7	LL1_Deck	5	0	267	0.1	-5.2	0	166	0.9
8	LL1_Deck	5	1	267.1	0.1	-20.8	0	90.7	1.2
9	LL1_Deck	5	2	267.3	0.1	-36.5	0	-75.4	1.5
10	LL1_Deck	6	0	267.3	0.1	-36.5	0	-75.4	1.5
11	LL1_Deck	6	1	267.3	0.1	-38.6	0	-104.5	1.6
12	LL1_Deck	6	2	267.3	0.1	-40.7	0	-135.2	1.6
13	LL1_Deck	7	0	235.1	0.1	72.8	0	-178.5	1.6
14	LL1_Deck	7	1	235.1	0.1	71.9	0	-153.9	1.6
15	LL1_Deck	7	2	235.1	0.1	70.9	0	-129.7	1.6
16	LL1_Deck	8	0	295.7	0.1	41.4	0	-139.6	1.6
17	LL1_Deck	8	1	295.7	0.1	34.7	0	-45.9	1.8
18	LL1_Deck	8	2	295.8	0.1	28.1	0	31.4	1.9
19	LL1_Deck	9	0	295.8	0.1	28.1	0	31.4	1.9
20	LL1_Deck	9	1	296	0.1	11.5	0	153.3	2.2
21	LL1_Deck	9	2	296.1	0.1	-5.2	0	172.8	2.5
22	LL1_Deck	10	0	296.1	0.1	-5.2	0	172.8	2.5
23	LL1_Deck	10	1	296.3	0.1	-21.8	0	89.8	2.8
24	LL1_Deck	10	2	296.4	0.1	-38.4	0	-95.9	3.1
25	LL1_Deck	11	0	296.4	0.1	-38.4	0	-95.9	3.1
26	LL1_Deck	11	1	296.5	0.1	-40.7	0	-128.8	3.2
27	LL1_Deck	11	2	296.5	0.1	-42.9	0	-163.5	3.2
28	LL1_Deck	12	0	294.6	0.1	7.6	0	-159.7	3.2
29	LL1_Deck	12	1	294.7	0.1	6.6	0	-157.3	3.2
30	LL1_Deck	12	2	294.7	0.1	5.7	0	-155.2	3.2
31	LL1_Deck	13	0	232	0.1	42.2	0	-163.2	3.2
32	LL1_Deck	13	1	232.1	0.1	36.4	0	-79.1	3.3
33	LL1_Deck	13	2	232.1	0.1	30.6	0	-7.3	3.5
34	LL1_Deck	14	0	232.1	0.1	30.6	0	-7.3	3.5
35	LL1_Deck	14	1	232.3	0.1	12.4	0	137.9	3.8
36	LL1_Deck	14	2	232.5	0.1	-5.8	0	160.3	4.1
37	LL1_Deck	15	0	232.5	0.1	-5.8	0	160.3	4.1
38	LL1_Deck	15	1	232.7	0.1	-24	0	60	4.5
39	LL1_Deck	15	2	232.8	0.1	-42.2	0	-163	4.8
40	LL1_Deck	16	0	232.8	0.1	-42.2	0	-163	4.8
41	LL1_Deck	16	1	232.9	0.1	-44.3	0	-196.9	4.9
42	LL1_Deck	16	2	232.9	0.1	-46.4	0	-232.5	4.9
43	LL1_Deck	17	0	227.4	0.1	-52.1	0	-204.8	4.9
44	LL1_Deck	17	1	227.4	0.1	-53	0	-222.4	4.9
45	LL1_Deck	17	2	227.4	0.1	-53.9	0	-240.3	5
46	LL1_Deck	18	0	91.8	0.1	47.7	0	-244.6	4.9
47	LL1_Deck	18	1	91.9	0.1	43	0	-166.9	5
48	LL1_Deck	18	2	91.9	0.1	38.4	0	-97	5.1
49	LL1_Deck	19	0	91.9	0.1	38.4	0	-97	5.1
50	LL1_Deck	19	1	92.1	0.1	18.6	0	111.8	5.5
51	LL1_Deck	19	2	92.3	0.1	-1.1	0	175.9	5.9
52	LL1_Deck	20	0	92.3	0.1	-1.1	0	175.9	5.9
53	LL1_Deck	20	1	92.5	0.1	-20.9	0	95.3	6.3
54	LL1_Deck	20	2	92.7	0.1	-40.7	0	-130	6.7
55	LL1_Deck	21	0	92.7	0.1	-40.7	0	-130	6.7
56	LL1_Deck	21	1	92.8	0.1	-44.1	0	-184.7	6.7
57	LL1_Deck	21	2	92.8	0.1	-47.6	0	-243.9	6.8
58	LL1_Deck	22	0	36.3	0.1	-106.1	0	-218.4	6.8
59	LL1_Deck	22	1	36.3	0.1	-107	0	-254.1	6.8
60	LL1_Deck	22	2	36.3	0.1	-107.9	0	-290.1	6.8
61	LL1_Deck	23	0	-90.6	0.1	48.6	0	-280.2	6.8
62	LL1_Deck	23	1	-90.5	0.1	45.5	0	-225.1	6.9
63	LL1_Deck	23	2	-90.5	0.1	42.3	0	-173.7	7
64	LL1_Deck	24	0	-90.5	0.1	42.3	0	-173.7	7
65	LL1_Deck	24	1	-90.3	0.1	21.2	0	75.1	7.4
66	LL1_Deck	24	2	-90.1	0.1	0	0	158.2	7.8
67	LL1_Deck	25	0	-90.1	0.1	0	0	158.2	7.8
68	LL1_Deck	25	1	-89.9	0.1	-21.1	0	75.3	8.3
69	LL1_Deck	25	2	-89.7	0.1	-42.3	0	-173.4	8.7
70	LL1_Deck	26	0	-89.7	0.1	-42.3	0	-173.4	8.7
71	LL1_Deck	26	1	-89.6	0.1	-47.7	0	-263.9	8.8
72	LL1_Deck	26	2	-89.6	0.1	-53.2	0	-365.4	8.9

Load (Row) Number	User's Load ID	Member ID	Joint ID	Fx (kips)	Fy (kips)	Fz (kips)	Mx (ft*kip)	My (ft*kip)	Mz (ft*kip)
1	LL1_Deck Offset	3	0	133.3	10.7	20.4	-590.5	-68.3	-11.9
2	LL1_Deck Offset	3	1	133.3	10.7	16.7	-563.1	-18.1	16.8
3	LL1_Deck Offset	3	2	133.3	10.7	13.1	-535.7	22.3	45.4
4	LL1_Deck Offset	4	0	133.3	10.7	13.1	-535.7	22.3	45.4
5	LL1_Deck Offset	4	1	133.4	10.7	5.2	-476.9	75.3	106.8
6	LL1_Deck Offset	4	2	133.5	10.7	-2.6	-418.2	83	168.2
7	LL1_Deck Offset	5	0	133.5	10.7	-2.6	-418.2	83	168.2
8	LL1_Deck Offset	5	1	133.6	10.7	-10.4	-359.5	45.3	229.6
9	LL1_Deck Offset	5	2	133.7	10.7	-18.2	-300.8	-37.7	290.9
10	LL1_Deck Offset	6	0	133.7	10.7	-18.2	-300.8	-37.7	290.9
11	LL1_Deck Offset	6	1	133.7	10.7	-19.3	-292.9	-52.2	299.1
12	LL1_Deck Offset	6	2	133.7	10.7	-20.3	-285.1	-67.6	307.3
13	LL1_Deck Offset	7	0	117.6	7.4	36.4	-335.9	-89.3	316.4
14	LL1_Deck Offset	7	1	117.6	7.4	35.9	-332.4	-77	318.8
15	LL1_Deck Offset	7	2	117.6	7.4	35.5	-329	-64.8	321.3
16	LL1_Deck Offset	8	0	147.9	7.4	20.7	-342	-69.8	323.1
17	LL1_Deck Offset	8	1	147.9	7.4	17.4	-317.1	-23	341.1
18	LL1_Deck Offset	8	2	147.9	7.4	14.1	-292.2	15.7	359.1
19	LL1_Deck Offset	9	0	147.9	7.4	14.1	-292.1	15.7	359.1
20	LL1_Deck Offset	9	1	148	7.4	5.7	-229.7	76.7	404.2
21	LL1_Deck Offset	9	2	148.1	7.4	-2.6	-167.3	86.4	449.2
22	LL1_Deck Offset	10	0	148.1	7.4	-2.6	-167.3	86.4	449.2
23	LL1_Deck Offset	10	1	148.2	7.4	-10.9	-104.9	44.9	494.3
24	LL1_Deck Offset	10	2	148.3	7.4	-19.2	-42.4	-48	539.4
25	LL1_Deck Offset	11	0	148.3	7.4	-19.2	-42.4	-48	539.4
26	LL1_Deck Offset	11	1	148.3	7.4	-20.3	-34	-64.4	545.5
27	LL1_Deck Offset	11	2	148.3	7.4	-21.5	-25.6	-81.7	551.6
28	LL1_Deck Offset	12	0	147.4	-1.5	3.8	-152.4	-79.8	554.7
29	LL1_Deck Offset	12	1	147.4	-1.5	3.3	-149.1	-78.6	554.1
30	LL1_Deck Offset	12	2	147.4	-1.5	2.9	-145.7	-77.6	553.6
31	LL1_Deck Offset	13	0	116	-2.5	21.1	-179.9	-81.6	571.9
32	LL1_Deck Offset	13	1	116.1	-2.5	18.2	-158.2	-39.5	566.3
33	LL1_Deck Offset	13	2	116.1	-2.5	15.3	-136.6	-3.6	560.7
34	LL1_Deck Offset	14	0	116.1	-2.5	15.3	-136.6	-3.6	560.7
35	LL1_Deck Offset	14	1	116.2	-2.5	6.2	-68.2	69	542.9
36	LL1_Deck Offset	14	2	116.3	-2.5	-2.9	0.1	80.2	525.2
37	LL1_Deck Offset	15	0	116.3	-2.5	-2.9	0.1	80.2	525.2
38	LL1_Deck Offset	15	1	116.4	-2.5	-12	68.4	30	507.5
39	LL1_Deck Offset	15	2	116.5	-2.5	-21.1	136.7	-81.5	489.7
40	LL1_Deck Offset	16	0	116.5	-2.5	-21.1	136.7	-81.5	489.7
41	LL1_Deck Offset	16	1	116.5	-2.5	-22.2	144.6	-98.5	487.7
42	LL1_Deck Offset	16	2	116.5	-2.5	-23.2	152.6	-116.3	485.6
43	LL1_Deck Offset	17	0	113.7	-12.1	-26	19.2	-102.4	456.6
44	LL1_Deck Offset	17	1	113.7	-12.1	-26.5	22.6	-111.2	452.5
45	LL1_Deck Offset	17	2	113.7	-12.1	-26.9	26	-120.2	448.4
46	LL1_Deck Offset	18	0	46	-15.1	23.8	-32	-122.3	486.6
47	LL1_Deck Offset	18	1	46	-15.1	21.5	-14.7	-83.4	460.5
48	LL1_Deck Offset	18	2	46	-15.1	19.2	2.7	-48.5	434.4
49	LL1_Deck Offset	19	0	46	-15.1	19.2	2.7	-48.5	434.4
50	LL1_Deck Offset	19	1	46.1	-15.1	9.3	76.9	55.9	323.2
51	LL1_Deck Offset	19	2	46.2	-15.1	-0.6	151	87.9	212
52	LL1_Deck Offset	20	0	46.2	-15.1	-0.6	151	87.9	212
53	LL1_Deck Offset	20	1	46.3	-15.1	-10.4	225.2	47.6	100.8
54	LL1_Deck Offset	20	2	46.4	-15.1	-20.3	299.3	-65	-10.4
55	LL1_Deck Offset	21	0	46.4	-15.1	-20.3	299.3	-65	-10.4
56	LL1_Deck Offset	21	1	46.4	-15.1	-22.1	312.4	-92.3	-30
57	LL1_Deck Offset	21	2	46.4	-15.1	-23.8	325.4	-121.9	-49.6
58	LL1_Deck Offset	22	0	18.2	-19.6	-53	259	-109.2	-82.1
59	LL1_Deck Offset	22	1	18.2	-19.6	-53.5	262.4	-127	-88.7
60	LL1_Deck Offset	22	2	18.2	-19.6	-53.9	265.8	-145	-95.3
61	LL1_Deck Offset	23	0	-45.3	-25.8	24.3	179.2	-140.1	-48.2
62	LL1_Deck Offset	23	1	-45.2	-25.8	22.7	191	-112.5	-78.5
63	LL1_Deck Offset	23	2	-45.2	-25.8	21.2	202.9	-86.8	-108.8
64	LL1_Deck Offset	24	0	-45.2	-25.8	21.2	202.9	-86.8	-108.8
65	LL1_Deck Offset	24	1	-45.1	-25.8	10.6	282.2	37.6	-311.6
66	LL1_Deck Offset	24	2	-45	-25.8	0	361.6	79.1	-514.4
67	LL1_Deck Offset	25	0	-45	-25.8	0	361.6	79.1	-514.4
68	LL1_Deck Offset	25	1	-44.9	-25.8	-10.6	441	37.7	-717.4
69	LL1_Deck Offset	25	2	-44.8	-25.8	-21.2	520.4	-86.7	-920.3
70	LL1_Deck Offset	26	0	-44.8	-25.8	-21.2	520.4	-86.7	-920.3
71	LL1_Deck Offset	26	1	-44.8	-25.8	-23.9	540.8	-132	-972.4
72	LL1_Deck Offset	26	2	-44.7	-25.8	-26.6	561.2	-182.7	-1024.4

Load (Row) Number	User's Load ID	Member ID	Joint ID	Fx (kips)	Fy (kips)	Fz (kips)	Mx (ft*kip)	My (ft*kip)	Mz (ft*kip)
1	LL1_Roof	3	0	31	0	0.8	0	-11.6	0
2	LL1_Roof	3	1	31	0	0.8	0	-9.3	0
3	LL1_Roof	3	2	31	0	0.8	0	-7.1	0.1
4	LL1_Roof	4	0	31	0	0.8	0	-7.1	0.1
5	LL1_Roof	4	1	31	0	0.8	0	-2.4	0.1
6	LL1_Roof	4	2	31	0	0.8	0	2.4	0.2
7	LL1_Roof	5	0	31	0	0.8	0	2.4	0.2
8	LL1_Roof	5	1	31	0	0.8	0	7.2	0.2
9	LL1_Roof	5	2	31	0	0.8	0	11.9	0.2
10	LL1_Roof	6	0	31	0	0.8	0	11.9	0.2
11	LL1_Roof	6	1	31	0	0.8	0	12.5	0.3
12	LL1_Roof	6	2	31	0	0.8	0	13.2	0.3
13	LL1_Roof	7	0	30.4	0	3.1	0	10.2	0.3
14	LL1_Roof	7	1	30.4	0	3.1	0	11.3	0.3
15	LL1_Roof	7	2	30.4	0	3.1	0	12.3	0.3
16	LL1_Roof	8	0	37.1	0	-0.2	0	11	0.3
17	LL1_Roof	8	1	37.1	0	-0.2	0	10.6	0.3
18	LL1_Roof	8	2	37.1	0	-0.2	0	10.3	0.3
19	LL1_Roof	9	0	37.1	0	-0.2	0	10.3	0.3
20	LL1_Roof	9	1	37.1	0	-0.2	0	9.3	0.4
21	LL1_Roof	9	2	37.1	0	-0.2	0	8.4	0.4
22	LL1_Roof	10	0	37.1	0	-0.2	0	8.4	0.4
23	LL1_Roof	10	1	37.1	0	-0.2	0	7.5	0.5
24	LL1_Roof	10	2	37.1	0	-0.2	0	6.5	0.5
25	LL1_Roof	11	0	37.1	0	-0.2	0	6.5	0.5
26	LL1_Roof	11	1	37.1	0	-0.2	0	6.4	0.5
27	LL1_Roof	11	2	37.1	0	-0.2	0	6.3	0.5
28	LL1_Roof	12	0	37.2	0	-3.1	0	7	0.5
29	LL1_Roof	12	1	37.2	0	-3.1	0	6	0.5
30	LL1_Roof	12	2	37.2	0	-3.1	0	4.9	0.5
31	LL1_Roof	13	0	31.8	0	0	0	4.6	0.5
32	LL1_Roof	13	1	31.8	0	0	0	4.6	0.5
33	LL1_Roof	13	2	31.8	0	0	0	4.5	0.6
34	LL1_Roof	14	0	31.8	0	0	0	4.5	0.6
35	LL1_Roof	14	1	31.8	0	0	0	4.3	0.6
36	LL1_Roof	14	2	31.8	0	0	0	4.1	0.7
37	LL1_Roof	15	0	31.8	0	0	0	4.1	0.7
38	LL1_Roof	15	1	31.8	0	0	0	3.9	0.7
39	LL1_Roof	15	2	31.8	0	0	0	3.7	0.8
40	LL1_Roof	16	0	31.8	0	0	0	3.7	0.8
41	LL1_Roof	16	1	31.8	0	0	0	3.7	0.8
42	LL1_Roof	16	2	31.8	0	0	0	3.7	0.8
43	LL1_Roof	17	0	28.4	0	-8.5	0	6.4	0.8
44	LL1_Roof	17	1	28.4	0	-8.5	0	3.6	0.8
45	LL1_Roof	17	2	28.4	0	-8.5	0	0.8	0.8
46	LL1_Roof	18	0	16.8	0	0.2	0	0.9	0.8
47	LL1_Roof	18	1	16.8	0	0.2	0	1.2	0.8
48	LL1_Roof	18	2	16.8	0	0.2	0	1.5	0.8
49	LL1_Roof	19	0	16.8	0	0.2	0	1.5	0.8
50	LL1_Roof	19	1	16.8	0	0.2	0	2.9	0.9
51	LL1_Roof	19	2	16.8	0	0.2	0	4.3	1
52	LL1_Roof	20	0	16.8	0	0.2	0	4.3	1
53	LL1_Roof	20	1	16.8	0	0.2	0	5.6	1
54	LL1_Roof	20	2	16.8	0	0.2	0	7	1.1
55	LL1_Roof	21	0	16.8	0	0.2	0	7	1.1
56	LL1_Roof	21	1	16.8	0	0.2	0	7.2	1.1
57	LL1_Roof	21	2	16.8	0	0.2	0	7.5	1.1
58	LL1_Roof	22	0	5.2	0	-12.1	0	9.8	1.1
59	LL1_Roof	22	1	5.2	0	-12.1	0	5.8	1.1
60	LL1_Roof	22	2	5.2	0	-12.1	0	1.7	1.1
61	LL1_Roof	23	0	-4.4	0	-0.4	0	4.4	1.1
62	LL1_Roof	23	1	-4.4	0	-0.4	0	3.9	1.1
63	LL1_Roof	23	2	-4.4	0	-0.4	0	3.4	1.1
64	LL1_Roof	24	0	-4.4	0	-0.4	0	3.4	1.1
65	LL1_Roof	24	1	-4.4	0	-0.4	0	0.2	1.2
66	LL1_Roof	24	2	-4.4	0	-0.4	0	-3.1	1.3
67	LL1_Roof	25	0	-4.4	0	-0.4	0	-3.1	1.3
68	LL1_Roof	25	1	-4.4	0	-0.4	0	-6.4	1.3
69	LL1_Roof	25	2	-4.4	0	-0.4	0	-9.6	1.4
70	LL1_Roof	26	0	-4.4	0	-0.4	0	-9.6	1.4
71	LL1_Roof	26	1	-4.4	0	-0.4	0	-10.5	1.4
72	LL1_Roof	26	2	-4.4	0	-0.4	0	-11.3	1.4

Load (Row) Number	User's Load ID	Member ID	Joint ID	Fx (kips)	Fy (kips)	Fz (kips)	Mx (ft*kip)	My (ft*kip)	Mz (ft*kip)
1	LL2_Deck	3	0	312	0.1	41.4	0	-146.4	0.1
2	LL2_Deck	3	1	312.1	0.1	34	0	-44.3	0.5
3	LL2_Deck	3	2	312.1	0.1	26.7	0	38	0.8
4	LL2_Deck	4	0	312.1	0.1	26.7	0	38	0.8
5	LL2_Deck	4	1	312.3	0.1	11.1	0	147.5	1.5
6	LL2_Deck	4	2	312.4	0.1	-4.6	0	166.3	2.2
7	LL2_Deck	5	0	312.4	0.1	-4.6	0	166.3	2.2
8	LL2_Deck	5	1	312.6	0.1	-20.2	0	94.3	3
9	LL2_Deck	5	2	312.8	0.1	-35.9	0	-68.3	3.7
10	LL2_Deck	6	0	312.8	0.1	-35.9	0	-68.3	3.7
11	LL2_Deck	6	1	312.8	0.1	-38	0	-96.9	3.8
12	LL2_Deck	6	2	312.8	0.1	-40.1	0	-127.2	3.9
13	LL2_Deck	7	0	277.3	0.1	87.5	0	-182.1	3.9
14	LL2_Deck	7	1	277.3	0.1	86.6	0	-152.5	3.9
15	LL2_Deck	7	2	277.3	0.1	85.7	0	-123.2	3.9
16	LL2_Deck	8	0	367.5	0.1	41.6	0	-134.4	4
17	LL2_Deck	8	1	367.6	0.1	34.9	0	-40.3	4.2
18	LL2_Deck	8	2	367.7	0.1	28.3	0	37.5	4.5
19	LL2_Deck	9	0	367.6	0.1	28.3	0	37.5	4.5
20	LL2_Deck	9	1	367.8	0.1	11.7	0	160.6	5.3
21	LL2_Deck	9	2	368	0.1	-5	0	181.3	6
22	LL2_Deck	10	0	368	0.1	-5	0	181.3	6
23	LL2_Deck	10	1	368.1	0.1	-21.6	0	99.4	6.8
24	LL2_Deck	10	2	368.3	0.1	-38.3	0	-85.1	7.5
25	LL2_Deck	11	0	368.3	0.1	-38.3	0	-85.1	7.5
26	LL2_Deck	11	1	368.3	0.1	-40.5	0	-117.8	7.6
27	LL2_Deck	11	2	368.4	0.1	-42.7	0	-152.4	7.7
28	LL2_Deck	12	0	367.1	0.1	17	0	-155.5	7.7
29	LL2_Deck	12	1	367.1	0.1	16.1	0	-149.9	7.8
30	LL2_Deck	12	2	367.1	0.1	15.2	0	-144.7	7.8
31	LL2_Deck	13	0	321	0.1	42.1	0	-153.8	7.8
32	LL2_Deck	13	1	321	0.1	36.4	0	-69.7	8.1
33	LL2_Deck	13	2	321.1	0.1	30.6	0	1.9	8.3
34	LL2_Deck	14	0	321.1	0.1	30.6	0	1.9	8.3
35	LL2_Deck	14	1	321.3	0.1	12.4	0	146.8	9.1
36	LL2_Deck	14	2	321.4	0.1	-5.8	0	168.8	10
37	LL2_Deck	15	0	321.4	0.1	-5.8	0	168.8	10
38	LL2_Deck	15	1	321.6	0.1	-24	0	68.2	10.8
39	LL2_Deck	15	2	321.8	0.1	-42.2	0	-155.1	11.6
40	LL2_Deck	16	0	321.8	0.1	-42.2	0	-155.1	11.6
41	LL2_Deck	16	1	321.8	0.1	-44.4	0	-189.1	11.7
42	LL2_Deck	16	2	321.8	0.1	-46.5	0	-224.8	11.8
43	LL2_Deck	17	0	317.5	0.1	-49.6	0	-198.4	11.8
44	LL2_Deck	17	1	317.5	0.1	-50.6	0	-215.2	11.8
45	LL2_Deck	17	2	317.5	0.1	-51.5	0	-232.3	11.9
46	LL2_Deck	18	0	185.2	0.1	47.7	0	-237.5	11.9
47	LL2_Deck	18	1	185.2	0.1	43.1	0	-159.7	12.1
48	LL2_Deck	18	2	185.3	0.1	38.4	0	-89.7	12.3
49	LL2_Deck	19	0	185.3	0.1	38.4	0	-89.7	12.3
50	LL2_Deck	19	1	185.5	0.1	18.7	0	119.4	13.2
51	LL2_Deck	19	2	185.7	0.1	-1.1	0	183.8	14.1
52	LL2_Deck	20	0	185.7	0.1	-1.1	0	183.8	14.1
53	LL2_Deck	20	1	185.9	0.1	-20.8	0	103.6	14.9
54	LL2_Deck	20	2	186.1	0.1	-40.6	0	-121.3	15.8
55	LL2_Deck	21	0	186.1	0.1	-40.6	0	-121.3	15.8
56	LL2_Deck	21	1	186.1	0.1	-44.1	0	-176	16
57	LL2_Deck	21	2	186.1	0.1	-47.6	0	-235.1	16.1
58	LL2_Deck	22	0	123.7	0.1	-112.4	0	-208.7	16.2
59	LL2_Deck	22	1	123.7	0.1	-113.3	0	-246.5	16.2
60	LL2_Deck	22	2	123.8	0.1	-114.2	0	-284.6	16.2
61	LL2_Deck	23	0	-8.2	0.1	48.5	0	-273.1	16.2
62	LL2_Deck	23	1	-8.2	0.1	45.3	0	-218.2	16.4
63	LL2_Deck	23	2	-8.2	0.1	42.2	0	-167	16.5
64	LL2_Deck	24	0	-8.2	0.1	42.2	0	-167	16.5
65	LL2_Deck	24	1	-8	0.1	21	0	80.6	17.5
66	LL2_Deck	24	2	-7.8	0.1	-0.1	0	162.5	18.5
67	LL2_Deck	25	0	-7.8	0.1	-0.1	0	162.5	18.5
68	LL2_Deck	25	1	-7.5	0.1	-21.3	0	78.6	19.4
69	LL2_Deck	25	2	-7.3	0.1	-42.5	0	-171.4	20.4
70	LL2_Deck	26	0	-7.3	0.1	-42.5	0	-171.4	20.4
71	LL2_Deck	26	1	-7.3	0.1	-47.9	0	-262.2	20.6
72	LL2_Deck	26	2	-7.2	0.1	-53.3	0	-363.9	20.9

Load (Row) Number	User's Load ID	Member ID	Joint ID	Fx (kips)	Fy (kips)	Fz (kips)	Mx (ft*kip)	My (ft*kip)	Mz (ft*kip)
1	LL2_Deck Offset	3	0	156	11.2	20.7	-597.1	-73.2	-12.6
2	LL2_Deck Offset	3	1	156	11.2	17	-569.7	-22.2	17.6
3	LL2_Deck Offset	3	2	156	11.2	13.4	-542.3	19	47.7
4	LL2_Deck Offset	4	0	156	11.2	13.4	-542.3	19	47.7
5	LL2_Deck Offset	4	1	156.1	11.2	5.5	-483.5	73.8	112.3
6	LL2_Deck Offset	4	2	156.2	11.2	-2.3	-424.8	83.1	176.8
7	LL2_Deck Offset	5	0	156.2	11.2	-2.3	-424.8	83.1	176.8
8	LL2_Deck Offset	5	1	156.3	11.2	-10.1	-366.1	47.2	241.3
9	LL2_Deck Offset	5	2	156.4	11.2	-17.9	-307.3	-34.1	305.8
10	LL2_Deck Offset	6	0	156.4	11.2	-17.9	-307.3	-34.1	305.8
11	LL2_Deck Offset	6	1	156.4	11.2	-19	-299.5	-48.5	314.5
12	LL2_Deck Offset	6	2	156.4	11.2	-20	-291.6	-63.6	323.1
13	LL2_Deck Offset	7	0	138.6	8.2	43.8	-339.3	-91	331.2
14	LL2_Deck Offset	7	1	138.6	8.2	43.3	-335.8	-76.2	334
15	LL2_Deck Offset	7	2	138.7	8.2	42.9	-332.4	-61.6	336.8
16	LL2_Deck Offset	8	0	183.7	8.3	20.8	-344.6	-67.2	337.9
17	LL2_Deck Offset	8	1	183.8	8.3	17.5	-319.7	-20.1	358
18	LL2_Deck Offset	8	2	183.8	8.3	14.1	-294.8	18.7	378.1
19	LL2_Deck Offset	9	0	183.8	8.3	14.2	-294.8	18.7	378.1
20	LL2_Deck Offset	9	1	183.9	8.3	5.8	-232.4	80.3	428.3
21	LL2_Deck Offset	9	2	184	8.3	-2.5	-170	90.7	478.5
22	LL2_Deck Offset	10	0	184	8.3	-2.5	-170	90.7	478.5
23	LL2_Deck Offset	10	1	184.1	8.3	-10.8	-107.5	49.7	528.7
24	LL2_Deck Offset	10	2	184.1	8.3	-19.1	-45.1	-42.6	579
25	LL2_Deck Offset	11	0	184.1	8.3	-19.1	-45.1	-42.6	579
26	LL2_Deck Offset	11	1	184.1	8.3	-20.2	-36.7	-58.9	585.8
27	LL2_Deck Offset	11	2	184.2	8.3	-21.4	-28.3	-76.2	592.5
28	LL2_Deck Offset	12	0	183.5	-0.4	8.5	-151.6	-77.7	595.5
29	LL2_Deck Offset	12	1	183.5	-0.4	8	-148.2	-75	595.3
30	LL2_Deck Offset	12	2	183.5	-0.4	7.6	-144.8	-72.4	595.2
31	LL2_Deck Offset	13	0	160.5	-1.3	21.1	-178.2	-76.9	612.8
32	LL2_Deck Offset	13	1	160.5	-1.3	18.2	-156.6	-34.9	609.7
33	LL2_Deck Offset	13	2	160.5	-1.3	15.3	-134.9	0.9	606.6
34	LL2_Deck Offset	14	0	160.5	-1.3	15.3	-134.9	0.9	606.6
35	LL2_Deck Offset	14	1	160.6	-1.3	6.2	-66.6	73.4	597
36	LL2_Deck Offset	14	2	160.7	-1.3	-2.9	1.8	84.4	587.4
37	LL2_Deck Offset	15	0	160.7	-1.3	-2.9	1.8	84.4	587.4
38	LL2_Deck Offset	15	1	160.8	-1.3	-12	70	34.1	577.7
39	LL2_Deck Offset	15	2	160.9	-1.3	-21.1	138.3	-77.6	568.1
40	LL2_Deck Offset	16	0	160.9	-1.3	-21.1	138.3	-77.6	568.1
41	LL2_Deck Offset	16	1	160.9	-1.3	-22.2	146.3	-94.6	567
42	LL2_Deck Offset	16	2	160.9	-1.3	-23.2	154.2	-112.4	565.8
43	LL2_Deck Offset	17	0	158.7	-10.6	-24.8	24.5	-99.2	538
44	LL2_Deck Offset	17	1	158.7	-10.6	-25.3	27.9	-107.6	534.4
45	LL2_Deck Offset	17	2	158.7	-10.6	-25.7	31.3	-116.1	530.9
46	LL2_Deck Offset	18	0	92.6	-13.4	23.9	-25.6	-118.8	567.8
47	LL2_Deck Offset	18	1	92.6	-13.4	21.5	-8.2	-79.8	544.6
48	LL2_Deck Offset	18	2	92.6	-13.4	19.2	9.2	-44.9	521.5
49	LL2_Deck Offset	19	0	92.6	-13.4	19.2	9.2	-44.9	521.5
50	LL2_Deck Offset	19	1	92.7	-13.4	9.3	83.3	59.7	422.6
51	LL2_Deck Offset	19	2	92.8	-13.4	-0.5	157.5	91.9	323.7
52	LL2_Deck Offset	20	0	92.8	-13.4	-0.5	157.5	91.9	323.7
53	LL2_Deck Offset	20	1	92.9	-13.4	-10.4	231.6	51.8	224.8
54	LL2_Deck Offset	20	2	93	-13.4	-20.3	305.8	-60.7	125.9
55	LL2_Deck Offset	21	0	93	-13.4	-20.3	305.8	-60.7	125.9
56	LL2_Deck Offset	21	1	93	-13.4	-22	318.9	-88	108.5
57	LL2_Deck Offset	21	2	93	-13.4	-23.8	331.9	-117.5	91.1
58	LL2_Deck Offset	22	0	61.8	-17.7	-56.2	267.8	-104.3	60.6
59	LL2_Deck Offset	22	1	61.9	-17.7	-56.6	271.2	-123.2	54.6
60	LL2_Deck Offset	22	2	61.9	-17.7	-57.1	274.6	-142.3	48.7
61	LL2_Deck Offset	23	0	-4.1	-23.6	24.3	189.7	-136.6	94.7
62	LL2_Deck Offset	23	1	-4.1	-23.6	22.7	201.5	-109.1	67
63	LL2_Deck Offset	23	2	-4.1	-23.6	21.1	213.4	-83.5	39.3
64	LL2_Deck Offset	24	0	-4.1	-23.6	21.1	213.4	-83.5	39.3
65	LL2_Deck Offset	24	1	-4	-23.6	10.5	292.8	40.3	-146.4
66	LL2_Deck Offset	24	2	-3.9	-23.6	-0.1	372.1	81.3	-332.1
67	LL2_Deck Offset	25	0	-3.9	-23.6	-0.1	372.1	81.3	-332.1
68	LL2_Deck Offset	25	1	-3.8	-23.6	-10.6	451.6	39.3	-518
69	LL2_Deck Offset	25	2	-3.7	-23.6	-21.2	531	-85.7	-703.8
70	LL2_Deck Offset	26	0	-3.7	-23.6	-21.2	531	-85.7	-703.8
71	LL2_Deck Offset	26	1	-3.7	-23.6	-23.9	551.3	-131.1	-751.4
72	LL2_Deck Offset	26	2	-3.6	-23.6	-26.7	571.7	-182	-799.1

Load (Row) Number	User's Load ID	Member ID	Joint ID	Fx (kips)	Fy (kips)	Fz (kips)	Mx (ft*kip)	My (ft*kip)	Mz (ft*kip)
1	LL2_Roof	3	0	35.8	0	0.9	0	-12.5	0
2	LL2_Roof	3	1	35.8	0	0.9	0	-10.1	0.1
3	LL2_Roof	3	2	35.8	0	0.9	0	-7.7	0.1
4	LL2_Roof	4	0	35.8	0	0.9	0	-7.7	0.1
5	LL2_Roof	4	1	35.8	0	0.9	0	-2.6	0.2
6	LL2_Roof	4	2	35.8	0	0.9	0	2.5	0.3
7	LL2_Roof	5	0	35.8	0	0.9	0	2.5	0.3
8	LL2_Roof	5	1	35.8	0	0.9	0	7.6	0.4
9	LL2_Roof	5	2	35.8	0	0.9	0	12.7	0.4
10	LL2_Roof	6	0	35.8	0	0.9	0	12.7	0.4
11	LL2_Roof	6	1	35.8	0	0.9	0	13.4	0.4
12	LL2_Roof	6	2	35.8	0	0.9	0	14.1	0.5
13	LL2_Roof	7	0	34.9	0	4.6	0	9.9	0.5
14	LL2_Roof	7	1	34.9	0	4.6	0	11.5	0.5
15	LL2_Roof	7	2	34.9	0	4.6	0	13	0.5
16	LL2_Roof	8	0	44.7	0	-0.1	0	11.6	0.5
17	LL2_Roof	8	1	44.7	0	-0.1	0	11.2	0.5
18	LL2_Roof	8	2	44.7	0	-0.1	0	10.9	0.5
19	LL2_Roof	9	0	44.7	0	-0.1	0	10.9	0.5
20	LL2_Roof	9	1	44.7	0	-0.1	0	10.1	0.6
21	LL2_Roof	9	2	44.7	0	-0.1	0	9.3	0.7
22	LL2_Roof	10	0	44.7	0	-0.1	0	9.3	0.7
23	LL2_Roof	10	1	44.7	0	-0.1	0	8.5	0.8
24	LL2_Roof	10	2	44.7	0	-0.1	0	7.7	0.9
25	LL2_Roof	11	0	44.7	0	-0.1	0	7.7	0.9
26	LL2_Roof	11	1	44.7	0	-0.1	0	7.6	0.9
27	LL2_Roof	11	2	44.7	0	-0.1	0	7.5	0.9
28	LL2_Roof	12	0	44.8	0	-2.2	0	7.5	0.9
29	LL2_Roof	12	1	44.8	0	-2.2	0	6.8	0.9
30	LL2_Roof	12	2	44.8	0	-2.2	0	6	0.9
31	LL2_Roof	13	0	41	0	0	0	5.6	0.9
32	LL2_Roof	13	1	41	0	0	0	5.6	1
33	LL2_Roof	13	2	41	0	0	0	5.5	1
34	LL2_Roof	14	0	41	0	0	0	5.5	1
35	LL2_Roof	14	1	41	0	0	0	5.2	1.1
36	LL2_Roof	14	2	41	0	0	0	5	1.2
37	LL2_Roof	15	0	41	0	0	0	5	1.2
38	LL2_Roof	15	1	41	0	0	0	4.7	1.3
39	LL2_Roof	15	2	41	0	0	0	4.5	1.4
40	LL2_Roof	16	0	41	0	0	0	4.5	1.4
41	LL2_Roof	16	1	41	0	0	0	4.5	1.4
42	LL2_Roof	16	2	41	0	0	0	4.4	1.4
43	LL2_Roof	17	0	37.6	0	-8.4	0	7.1	1.4
44	LL2_Roof	17	1	37.6	0	-8.4	0	4.2	1.4
45	LL2_Roof	17	2	37.6	0	-8.4	0	1.4	1.4
46	LL2_Roof	18	0	26.1	0	0.2	0	1.5	1.4
47	LL2_Roof	18	1	26.1	0	0.2	0	1.8	1.4
48	LL2_Roof	18	2	26.1	0	0.2	0	2.2	1.5
49	LL2_Roof	19	0	26.1	0	0.2	0	2.2	1.5
50	LL2_Roof	19	1	26.1	0	0.2	0	3.7	1.6
51	LL2_Roof	19	2	26.1	0	0.2	0	5.3	1.7
52	LL2_Roof	20	0	26.1	0	0.2	0	5.3	1.7
53	LL2_Roof	20	1	26.1	0	0.2	0	6.8	1.8
54	LL2_Roof	20	2	26.1	0	0.2	0	8.4	1.9
55	LL2_Roof	21	0	26.1	0	0.2	0	8.4	1.9
56	LL2_Roof	21	1	26.1	0	0.2	0	8.6	1.9
57	LL2_Roof	21	2	26.1	0	0.2	0	8.9	1.9
58	LL2_Roof	22	0	13.6	0	-13.1	0	11.5	1.9
59	LL2_Roof	22	1	13.6	0	-13.1	0	7.1	1.9
60	LL2_Roof	22	2	13.6	0	-13.1	0	2.7	1.9
61	LL2_Roof	23	0	3.2	0	-0.5	0	5.7	1.9
62	LL2_Roof	23	1	3.2	0	-0.5	0	5.2	1.9
63	LL2_Roof	23	2	3.2	0	-0.5	0	4.6	2
64	LL2_Roof	24	0	3.2	0	-0.5	0	4.6	2
65	LL2_Roof	24	1	3.2	0	-0.5	0	0.7	2.1
66	LL2_Roof	24	2	3.2	0	-0.5	0	-3.3	2.2
67	LL2_Roof	25	0	3.2	0	-0.5	0	-3.3	2.2
68	LL2_Roof	25	1	3.2	0	-0.5	0	-7.2	2.3
69	LL2_Roof	25	2	3.2	0	-0.5	0	-11.1	2.4
70	LL2_Roof	26	0	3.2	0	-0.5	0	-11.1	2.4
71	LL2_Roof	26	1	3.2	0	-0.5	0	-12.1	2.4
72	LL2_Roof	26	2	3.2	0	-0.5	0	-13.1	2.5

Load (Row) Number	User's Load ID	Member ID	Joint ID	Fx (kips)	Fy (kips)	Fz (kips)	Mx (ft*kip)	My (ft*kip)	Mz (ft*kip)
1	LL3_Deck	3	0	-45.5	-0.1	-0.6	0	9.8	-0.1
2	LL3_Deck	3	1	-45.5	-0.1	-0.6	0	8.2	-0.3
3	LL3_Deck	3	2	-45.5	-0.1	-0.6	0	6.6	-0.5
4	LL3_Deck	4	0	-45.5	-0.1	-0.6	0	6.6	-0.5
5	LL3_Deck	4	1	-45.5	-0.1	-0.6	0	3.2	-0.9
6	LL3_Deck	4	2	-45.5	-0.1	-0.6	0	-0.3	-1.3
7	LL3_Deck	5	0	-45.5	-0.1	-0.6	0	-0.3	-1.3
8	LL3_Deck	5	1	-45.5	-0.1	-0.6	0	-3.7	-1.7
9	LL3_Deck	5	2	-45.5	-0.1	-0.6	0	-7.1	-2.1
10	LL3_Deck	6	0	-45.5	-0.1	-0.6	0	-7.1	-2.1
11	LL3_Deck	6	1	-45.5	-0.1	-0.6	0	-7.6	-2.2
12	LL3_Deck	6	2	-45.5	-0.1	-0.6	0	-8	-2.3
13	LL3_Deck	7	0	-42.2	-0.1	-14.8	0	3.6	-2.3
14	LL3_Deck	7	1	-42.2	-0.1	-14.8	0	-1.5	-2.3
15	LL3_Deck	7	2	-42.2	-0.1	-14.8	0	-6.5	-2.3
16	LL3_Deck	8	0	-71.9	-0.1	-0.2	0	-5.2	-2.3
17	LL3_Deck	8	1	-71.9	-0.1	-0.2	0	-5.6	-2.5
18	LL3_Deck	8	2	-71.9	-0.1	-0.2	0	-6.1	-2.7
19	LL3_Deck	9	0	-71.9	-0.1	-0.2	0	-6.1	-2.7
20	LL3_Deck	9	1	-71.9	-0.1	-0.2	0	-7.3	-3.1
21	LL3_Deck	9	2	-71.9	-0.1	-0.2	0	-8.5	-3.5
22	LL3_Deck	10	0	-71.9	-0.1	-0.2	0	-8.5	-3.5
23	LL3_Deck	10	1	-71.9	-0.1	-0.2	0	-9.6	-4
24	LL3_Deck	10	2	-71.9	-0.1	-0.2	0	-10.8	-4.4
25	LL3_Deck	11	0	-71.9	-0.1	-0.2	0	-10.8	-4.4
26	LL3_Deck	11	1	-71.9	-0.1	-0.2	0	-11	-4.5
27	LL3_Deck	11	2	-71.9	-0.1	-0.2	0	-11.1	-4.5
28	LL3_Deck	12	0	-72.5	-0.1	-9.4	0	-4.2	-4.5
29	LL3_Deck	12	1	-72.5	-0.1	-9.4	0	-7.3	-4.5
30	LL3_Deck	12	2	-72.5	-0.1	-9.4	0	-10.5	-4.6
31	LL3_Deck	13	0	-89	-0.1	0.1	0	-9.4	-4.6
32	LL3_Deck	13	1	-89	-0.1	0.1	0	-9.3	-4.7
33	LL3_Deck	13	2	-89	-0.1	0.1	0	-9.2	-4.9
34	LL3_Deck	14	0	-89	-0.1	0.1	0	-9.2	-4.9
35	LL3_Deck	14	1	-89	-0.1	0.1	0	-8.9	-5.3
36	LL3_Deck	14	2	-89	-0.1	0.1	0	-8.5	-5.8
37	LL3_Deck	15	0	-89	-0.1	0	0	-8.5	-5.8
38	LL3_Deck	15	1	-89	-0.1	0	0	-8.2	-6.3
39	LL3_Deck	15	2	-89	-0.1	0	0	-7.8	-6.8
40	LL3_Deck	16	0	-89	-0.1	0.1	0	-7.8	-6.8
41	LL3_Deck	16	1	-89	-0.1	0.1	0	-7.8	-6.8
42	LL3_Deck	16	2	-89	-0.1	0.1	0	-7.8	-6.9
43	LL3_Deck	17	0	-90.1	-0.1	-2.4	0	-6.4	-6.9
44	LL3_Deck	17	1	-90.1	-0.1	-2.4	0	-7.2	-6.9
45	LL3_Deck	17	2	-90.1	-0.1	-2.4	0	-8.1	-6.9
46	LL3_Deck	18	0	-93.3	-0.1	0	0	-7.1	-6.9
47	LL3_Deck	18	1	-93.3	-0.1	0	0	-7.2	-7
48	LL3_Deck	18	2	-93.3	-0.1	0	0	-7.3	-7.1
49	LL3_Deck	19	0	-93.3	-0.1	0	0	-7.3	-7.1
50	LL3_Deck	19	1	-93.3	-0.1	0	0	-7.6	-7.6
51	LL3_Deck	19	2	-93.3	-0.1	0	0	-8	-8.2
52	LL3_Deck	20	0	-93.3	-0.1	0	0	-8	-8.2
53	LL3_Deck	20	1	-93.3	-0.1	0	0	-8.3	-8.7
54	LL3_Deck	20	2	-93.3	-0.1	0	0	-8.6	-9.2
55	LL3_Deck	21	0	-93.3	-0.1	0	0	-8.6	-9.2
56	LL3_Deck	21	1	-93.3	-0.1	0	0	-8.7	-9.3
57	LL3_Deck	21	2	-93.3	-0.1	0	0	-8.8	-9.3
58	LL3_Deck	22	0	-87.5	-0.1	6.3	0	-9.7	-9.3
59	LL3_Deck	22	1	-87.5	-0.1	6.3	0	-7.6	-9.4
60	LL3_Deck	22	2	-87.5	-0.1	6.3	0	-5.5	-9.4
61	LL3_Deck	23	0	-82.3	-0.1	0.1	0	-7	-9.4
62	LL3_Deck	23	1	-82.3	-0.1	0.1	0	-6.8	-9.5
63	LL3_Deck	23	2	-82.3	-0.1	0.1	0	-6.7	-9.6
64	LL3_Deck	24	0	-82.3	-0.1	0.1	0	-6.7	-9.6
65	LL3_Deck	24	1	-82.3	-0.1	0.1	0	-5.5	-10.1
66	LL3_Deck	24	2	-82.3	-0.1	0.1	0	-4.4	-10.6
67	LL3_Deck	25	0	-82.3	-0.1	0.1	0	-4.4	-10.6
68	LL3_Deck	25	1	-82.3	-0.1	0.1	0	-3.2	-11.2
69	LL3_Deck	25	2	-82.3	-0.1	0.1	0	-2.1	-11.7
70	LL3_Deck	26	0	-82.3	-0.1	0.1	0	-2.1	-11.7
71	LL3_Deck	26	1	-82.3	-0.1	0.1	0	-1.8	-11.9
72	LL3_Deck	26	2	-82.3	-0.1	0.1	0	-1.5	-12

Load (Row) Number	User's Load ID	Member ID	Joint ID	Fx (kips)	Fy (kips)	Fz (kips)	Mx (ft*kip)	My (ft*kip)	Mz (ft*kip)
1	LL3_Deck Offset	3	0	-22.7	-0.5	-0.3	6.6	4.9	0.7
2	LL3_Deck Offset	3	1	-22.7	-0.5	-0.3	6.6	4.1	-0.8
3	LL3_Deck Offset	3	2	-22.7	-0.5	-0.3	6.6	3.3	-2.3
4	LL3_Deck Offset	4	0	-22.7	-0.5	-0.3	6.6	3.3	-2.3
5	LL3_Deck Offset	4	1	-22.7	-0.5	-0.3	6.6	1.6	-5.4
6	LL3_Deck Offset	4	2	-22.7	-0.5	-0.3	6.6	-0.1	-8.6
7	LL3_Deck Offset	5	0	-22.7	-0.5	-0.3	6.6	-0.1	-8.6
8	LL3_Deck Offset	5	1	-22.7	-0.5	-0.3	6.6	-1.8	-11.7
9	LL3_Deck Offset	5	2	-22.7	-0.5	-0.3	6.6	-3.5	-14.9
10	LL3_Deck Offset	6	0	-22.7	-0.5	-0.3	6.6	-3.5	-14.9
11	LL3_Deck Offset	6	1	-22.7	-0.5	-0.3	6.6	-3.8	-15.3
12	LL3_Deck Offset	6	2	-22.7	-0.5	-0.3	6.6	-4	-15.8
13	LL3_Deck Offset	7	0	-21.1	-0.8	-7.4	3.4	1.8	-14.9
14	LL3_Deck Offset	7	1	-21.1	-0.8	-7.4	3.4	-0.7	-15.2
15	LL3_Deck Offset	7	2	-21.1	-0.8	-7.4	3.4	-3.2	-15.4
16	LL3_Deck Offset	8	0	-35.9	-0.8	-0.1	2.6	-2.6	-14.8
17	LL3_Deck Offset	8	1	-35.9	-0.8	-0.1	2.6	-2.8	-16.9
18	LL3_Deck Offset	8	2	-35.9	-0.8	-0.1	2.6	-3	-18.9
19	LL3_Deck Offset	9	0	-35.9	-0.8	-0.1	2.6	-3	-18.9
20	LL3_Deck Offset	9	1	-35.9	-0.8	-0.1	2.6	-3.6	-24.1
21	LL3_Deck Offset	9	2	-35.9	-0.8	-0.1	2.6	-4.2	-29.2
22	LL3_Deck Offset	10	0	-35.9	-0.8	-0.1	2.6	-4.2	-29.2
23	LL3_Deck Offset	10	1	-35.9	-0.8	-0.1	2.6	-4.8	-34.4
24	LL3_Deck Offset	10	2	-35.9	-0.8	-0.1	2.6	-5.4	-39.6
25	LL3_Deck Offset	11	0	-35.9	-0.8	-0.1	2.6	-5.4	-39.6
26	LL3_Deck Offset	11	1	-35.9	-0.8	-0.1	2.6	-5.5	-40.2
27	LL3_Deck Offset	11	2	-35.9	-0.8	-0.1	2.6	-5.5	-40.9
28	LL3_Deck Offset	12	0	-36.2	-1.1	-4.7	-0.8	-2.1	-40.8
29	LL3_Deck Offset	12	1	-36.2	-1.1	-4.7	-0.8	-3.7	-41.2
30	LL3_Deck Offset	12	2	-36.2	-1.1	-4.7	-0.8	-5.2	-41.6
31	LL3_Deck Offset	13	0	-44.4	-1.2	0	-1.7	-4.7	-40.8
32	LL3_Deck Offset	13	1	-44.4	-1.2	0	-1.7	-4.6	-43.4
33	LL3_Deck Offset	13	2	-44.4	-1.2	0	-1.7	-4.6	-46
34	LL3_Deck Offset	14	0	-44.4	-1.2	0	-1.7	-4.6	-46
35	LL3_Deck Offset	14	1	-44.4	-1.2	0	-1.7	-4.4	-54.1
36	LL3_Deck Offset	14	2	-44.4	-1.2	0	-1.7	-4.3	-62.2
37	LL3_Deck Offset	15	0	-44.4	-1.2	0	-1.7	-4.3	-62.2
38	LL3_Deck Offset	15	1	-44.4	-1.2	0	-1.7	-4.1	-70.3
39	LL3_Deck Offset	15	2	-44.4	-1.2	0	-1.7	-3.9	-78.4
40	LL3_Deck Offset	16	0	-44.4	-1.2	0	-1.7	-3.9	-78.4
41	LL3_Deck Offset	16	1	-44.4	-1.2	0	-1.7	-3.9	-79.3
42	LL3_Deck Offset	16	2	-44.4	-1.2	0	-1.7	-3.9	-80.2
43	LL3_Deck Offset	17	0	-45	-1.5	-1.2	-5.3	-3.2	-81.4
44	LL3_Deck Offset	17	1	-45	-1.5	-1.2	-5.3	-3.6	-81.9
45	LL3_Deck Offset	17	2	-45	-1.5	-1.2	-5.3	-4	-82.5
46	LL3_Deck Offset	18	0	-46.6	-1.7	0	-6.5	-3.6	-81.3
47	LL3_Deck Offset	18	1	-46.6	-1.7	0	-6.5	-3.6	-84.1
48	LL3_Deck Offset	18	2	-46.6	-1.7	0	-6.5	-3.6	-87
49	LL3_Deck Offset	19	0	-46.6	-1.7	0	-6.5	-3.6	-87
50	LL3_Deck Offset	19	1	-46.6	-1.7	0	-6.5	-3.8	-99.4
51	LL3_Deck Offset	19	2	-46.6	-1.7	0	-6.5	-4	-111.7
52	LL3_Deck Offset	20	0	-46.6	-1.7	0	-6.5	-4	-111.7
53	LL3_Deck Offset	20	1	-46.6	-1.7	0	-6.5	-4.1	-124
54	LL3_Deck Offset	20	2	-46.6	-1.7	0	-6.5	-4.3	-136.4
55	LL3_Deck Offset	21	0	-46.6	-1.7	0	-6.5	-4.3	-136.4
56	LL3_Deck Offset	21	1	-46.6	-1.7	0	-6.5	-4.3	-138.5
57	LL3_Deck Offset	21	2	-46.6	-1.7	0	-6.5	-4.4	-140.7
58	LL3_Deck Offset	22	0	-43.7	-1.9	3.1	-8.8	-4.9	-142.7
59	LL3_Deck Offset	22	1	-43.7	-1.9	3.1	-8.8	-3.8	-143.3
60	LL3_Deck Offset	22	2	-43.7	-1.9	3.1	-8.8	-2.8	-143.9
61	LL3_Deck Offset	23	0	-41.1	-2.2	0.1	-10.5	-3.5	-142.9
62	LL3_Deck Offset	23	1	-41.1	-2.2	0.1	-10.5	-3.4	-145.5
63	LL3_Deck Offset	23	2	-41.1	-2.2	0.1	-10.5	-3.3	-148
64	LL3_Deck Offset	24	0	-41.1	-2.2	0.1	-10.5	-3.3	-148
65	LL3_Deck Offset	24	1	-41.1	-2.2	0.1	-10.5	-2.8	-165.1
66	LL3_Deck Offset	24	2	-41.1	-2.2	0.1	-10.5	-2.2	-182.3
67	LL3_Deck Offset	25	0	-41.1	-2.2	0.1	-10.5	-2.2	-182.3
68	LL3_Deck Offset	25	1	-41.1	-2.2	0.1	-10.5	-1.6	-199.4
69	LL3_Deck Offset	25	2	-41.1	-2.2	0.1	-10.5	-1	-216.6
70	LL3_Deck Offset	26	0	-41.1	-2.2	0.1	-10.5	-1	-216.6
71	LL3_Deck Offset	26	1	-41.1	-2.2	0.1	-10.5	-0.9	-221
72	LL3_Deck Offset	26	2	-41.1	-2.2	0.1	-10.5	-0.7	-225.3

Load (Row) Number	User's Load ID	Member ID	Joint ID	Fx (kips)	Fy (kips)	Fz (kips)	Mx (ft*kip)	My (ft*kip)	Mz (ft*kip)
1	LL3_Roof	3	0	-4.8	0	-0.1	0	1	0
2	LL3_Roof	3	1	-4.8	0	-0.1	0	0.8	0
3	LL3_Roof	3	2	-4.8	0	-0.1	0	0.6	0
4	LL3_Roof	4	0	-4.8	0	-0.1	0	0.6	0
5	LL3_Roof	4	1	-4.8	0	-0.1	0	0.3	-0.1
6	LL3_Roof	4	2	-4.8	0	-0.1	0	-0.1	-0.1
7	LL3_Roof	5	0	-4.8	0	-0.1	0	-0.1	-0.1
8	LL3_Roof	5	1	-4.8	0	-0.1	0	-0.4	-0.2
9	LL3_Roof	5	2	-4.8	0	-0.1	0	-0.8	-0.2
10	LL3_Roof	6	0	-4.8	0	-0.1	0	-0.8	-0.2
11	LL3_Roof	6	1	-4.8	0	-0.1	0	-0.8	-0.2
12	LL3_Roof	6	2	-4.8	0	-0.1	0	-0.9	-0.2
13	LL3_Roof	7	0	-4.5	0	-1.5	0	0.3	-0.2
14	LL3_Roof	7	1	-4.5	0	-1.5	0	-0.2	-0.2
15	LL3_Roof	7	2	-4.5	0	-1.5	0	-0.7	-0.2
16	LL3_Roof	8	0	-7.5	0	0	0	-0.6	-0.2
17	LL3_Roof	8	1	-7.5	0	0	0	-0.6	-0.2
18	LL3_Roof	8	2	-7.5	0	0	0	-0.7	-0.2
19	LL3_Roof	9	0	-7.5	0	0	0	-0.7	-0.2
20	LL3_Roof	9	1	-7.5	0	0	0	-0.8	-0.3
21	LL3_Roof	9	2	-7.5	0	0	0	-0.9	-0.3
22	LL3_Roof	10	0	-7.5	0	0	0	-0.9	-0.3
23	LL3_Roof	10	1	-7.5	0	0	0	-1	-0.3
24	LL3_Roof	10	2	-7.5	0	0	0	-1.2	-0.4
25	LL3_Roof	11	0	-7.5	0	0	0	-1.2	-0.4
26	LL3_Roof	11	1	-7.5	0	0	0	-1.2	-0.4
27	LL3_Roof	11	2	-7.5	0	0	0	-1.2	-0.4
28	LL3_Roof	12	0	-7.6	0	-0.9	0	-0.5	-0.4
29	LL3_Roof	12	1	-7.6	0	-0.9	0	-0.8	-0.4
30	LL3_Roof	12	2	-7.6	0	-0.9	0	-1.1	-0.4
31	LL3_Roof	13	0	-9.1	0	0	0	-1	-0.4
32	LL3_Roof	13	1	-9.1	0	0	0	-1	-0.4
33	LL3_Roof	13	2	-9.1	0	0	0	-1	-0.4
34	LL3_Roof	14	0	-9.1	0	0	0	-1	-0.4
35	LL3_Roof	14	1	-9.1	0	0	0	-0.9	-0.5
36	LL3_Roof	14	2	-9.1	0	0	0	-0.9	-0.5
37	LL3_Roof	15	0	-9.1	0	0	0	-0.9	-0.5
38	LL3_Roof	15	1	-9.1	0	0	0	-0.8	-0.5
39	LL3_Roof	15	2	-9.1	0	0	0	-0.7	-0.6
40	LL3_Roof	16	0	-9.1	0	0	0	-0.7	-0.6
41	LL3_Roof	16	1	-9.1	0	0	0	-0.7	-0.6
42	LL3_Roof	16	2	-9.1	0	0	0	-0.7	-0.6
43	LL3_Roof	17	0	-9.2	0	-0.1	0	-0.6	-0.6
44	LL3_Roof	17	1	-9.2	0	-0.1	0	-0.6	-0.6
45	LL3_Roof	17	2	-9.2	0	-0.1	0	-0.7	-0.6
46	LL3_Roof	18	0	-9.3	0	0	0	-0.6	-0.6
47	LL3_Roof	18	1	-9.3	0	0	0	-0.6	-0.6
48	LL3_Roof	18	2	-9.3	0	0	0	-0.7	-0.6
49	LL3_Roof	19	0	-9.3	0	0	0	-0.7	-0.6
50	LL3_Roof	19	1	-9.3	0	0	0	-0.8	-0.7
51	LL3_Roof	19	2	-9.3	0	0	0	-1	-0.7
52	LL3_Roof	20	0	-9.3	0	0	0	-1	-0.7
53	LL3_Roof	20	1	-9.3	0	0	0	-1.2	-0.8
54	LL3_Roof	20	2	-9.3	0	0	0	-1.4	-0.8
55	LL3_Roof	21	0	-9.3	0	0	0	-1.4	-0.8
56	LL3_Roof	21	1	-9.3	0	0	0	-1.4	-0.8
57	LL3_Roof	21	2	-9.3	0	0	0	-1.4	-0.8
58	LL3_Roof	22	0	-8.4	0	1	0	-1.6	-0.8
59	LL3_Roof	22	1	-8.4	0	1	0	-1.3	-0.8
60	LL3_Roof	22	2	-8.4	0	1	0	-1	-0.8
61	LL3_Roof	23	0	-7.6	0	0.1	0	-1.3	-0.8
62	LL3_Roof	23	1	-7.6	0	0.1	0	-1.2	-0.8
63	LL3_Roof	23	2	-7.6	0	0.1	0	-1.1	-0.8
64	LL3_Roof	24	0	-7.6	0	0.1	0	-1.1	-0.8
65	LL3_Roof	24	1	-7.6	0	0.1	0	-0.5	-0.9
66	LL3_Roof	24	2	-7.6	0	0.1	0	0.2	-0.9
67	LL3_Roof	25	0	-7.6	0	0.1	0	0.2	-0.9
68	LL3_Roof	25	1	-7.6	0	0.1	0	0.8	-1
69	LL3_Roof	25	2	-7.6	0	0.1	0	1.5	-1
70	LL3_Roof	26	0	-7.6	0	0.1	0	1.5	-1
71	LL3_Roof	26	1	-7.6	0	0.1	0	1.6	-1
72	LL3_Roof	26	2	-7.6	0	0.1	0	1.8	-1

Load (Row) Number	User's Load ID	Member ID	Joint ID	Fx (kips)	Fy (kips)	Fz (kips)	Mx (ft*kip)	My (ft*kip)	Mz (ft*kip)
1	TU-	3	0	-130.2	0	-3.9	0	67	0.3
2	TU-	3	1	-130.2	0	-3.9	0	56.3	0.4
3	TU-	3	2	-130.2	0	-3.9	0	45.7	0.4
4	TU-	4	0	-130.2	0	-3.9	0	45.7	0.4
5	TU-	4	1	-130.2	0	-3.9	0	22.8	0.4
6	TU-	4	2	-130.2	0	-3.9	0	0	0.5
7	TU-	5	0	-130.2	0	-3.9	0	0	0.5
8	TU-	5	1	-130.2	0	-3.9	0	-22.8	0.5
9	TU-	5	2	-130.2	0	-3.9	0	-45.6	0.6
10	TU-	6	0	-130.2	0	-3.9	0	-45.6	0.6
11	TU-	6	1	-130.2	0	-3.9	0	-48.7	0.6
12	TU-	6	2	-130.2	0	-3.9	0	-51.7	0.6
13	TU-	7	0	-124.4	0	-34	0	-17.5	0.6
14	TU-	7	1	-124.4	0	-34	0	-29.1	0.6
15	TU-	7	2	-124.4	0	-34	0	-40.6	0.6
16	TU-	8	0	-193.7	0	0	0	-35.1	0.6
17	TU-	8	1	-193.7	0	0	0	-35.1	0.6
18	TU-	8	2	-193.7	0	0	0	-35.1	0.6
19	TU-	9	0	-193.7	0	0	0	-35.1	0.6
20	TU-	9	1	-193.7	0	0	0	-35	0.7
21	TU-	9	2	-193.7	0	0	0	-34.9	0.7
22	TU-	10	0	-193.7	0	0	0	-34.9	0.7
23	TU-	10	1	-193.7	0	0	0	-34.8	0.8
24	TU-	10	2	-193.7	0	0	0	-34.7	0.8
25	TU-	11	0	-193.7	0	0	0	-34.7	0.8
26	TU-	11	1	-193.7	0	0	0	-34.7	0.8
27	TU-	11	2	-193.7	0	0	0	-34.7	0.8
28	TU-	12	0	-194.9	0	-8.1	0	-24.3	0.8
29	TU-	12	1	-194.9	0	-8.1	0	-27	0.8
30	TU-	12	2	-194.9	0	-8.1	0	-29.7	0.9
31	TU-	13	0	-210	0	0.6	0	-27.4	0.9
32	TU-	13	1	-210	0	0.6	0	-26.2	0.9
33	TU-	13	2	-210	0	0.6	0	-25	0.9
34	TU-	14	0	-210	0	0.6	0	-25	0.9
35	TU-	14	1	-210	0	0.6	0	-21.3	0.9
36	TU-	14	2	-210	0	0.6	0	-17.6	1
37	TU-	15	0	-210	0	0.5	0	-17.6	1
38	TU-	15	1	-210	0	0.5	0	-13.9	1
39	TU-	15	2	-210	0	0.5	0	-10.2	1.1
40	TU-	16	0	-210	0	0.6	0	-10.2	1.1
41	TU-	16	1	-210	0	0.6	0	-9.7	1.1
42	TU-	16	2	-210	0	0.6	0	-9.3	1.1
43	TU-	17	0	-204.8	0	14.5	0	-9.9	1.1
44	TU-	17	1	-204.8	0	14.5	0	-5.1	1.1
45	TU-	17	2	-204.8	0	14.5	0	-0.2	1.1
46	TU-	18	0	-182.7	0	-2.2	0	2.3	1.1
47	TU-	18	1	-182.7	0	-2.2	0	-1.4	1.1
48	TU-	18	2	-182.7	0	-2.2	0	-5.1	1.1
49	TU-	19	0	-182.7	0	-2.2	0	-5.1	1.1
50	TU-	19	1	-182.7	0	-2.2	0	-21	1.2
51	TU-	19	2	-182.7	0	-2.2	0	-36.8	1.2
52	TU-	20	0	-182.7	0	-2.2	0	-36.8	1.2
53	TU-	20	1	-182.7	0	-2.2	0	-52.7	1.3
54	TU-	20	2	-182.7	0	-2.2	0	-68.6	1.3
55	TU-	21	0	-182.7	0	-2.2	0	-68.6	1.3
56	TU-	21	1	-182.7	0	-2.2	0	-71.4	1.3
57	TU-	21	2	-182.7	0	-2.2	0	-74.2	1.4
58	TU-	22	0	-141.5	0	41.5	0	-87.4	1.4
59	TU-	22	1	-141.5	0	41.5	0	-73.5	1.4
60	TU-	22	2	-141.5	0	41.5	0	-59.7	1.4
61	TU-	23	0	-110.8	0	5.3	0	-77.2	1.4
62	TU-	23	1	-110.8	0	5.3	0	-71	1.4
63	TU-	23	2	-110.8	0	5.3	0	-64.8	1.4
64	TU-	24	0	-110.8	0	5.3	0	-64.8	1.4
65	TU-	24	1	-110.8	0	5.3	0	-23.2	1.4
66	TU-	24	2	-110.8	0	5.3	0	18.3	1.5
67	TU-	25	0	-110.8	0	5.3	0	18.3	1.5
68	TU-	25	1	-110.8	0	5.3	0	59.9	1.5
69	TU-	25	2	-110.8	0	5.3	0	101.5	1.6
70	TU-	26	0	-110.8	0	5.3	0	101.5	1.6
71	TU-	26	1	-110.8	0	5.3	0	112.1	1.6
72	TU-	26	2	-110.8	0	5.3	0	122.8	1.6

Load (Row) Number	User's Load ID	Member ID	Joint ID	Fx (kips)	Fy (kips)	Fz (kips)	Mx (ft*kip)	My (ft*kip)	Mz (ft*kip)
1	TU+	3	0	130.2	0	3.9	0	-67	-0.3
2	TU+	3	1	130.2	0	3.9	0	-56.3	-0.4
3	TU+	3	2	130.2	0	3.9	0	-45.7	-0.4
4	TU+	4	0	130.2	0	3.9	0	-45.7	-0.4
5	TU+	4	1	130.2	0	3.9	0	-22.8	-0.4
6	TU+	4	2	130.2	0	3.9	0	0	-0.5
7	TU+	5	0	130.2	0	3.9	0	0	-0.5
8	TU+	5	1	130.2	0	3.9	0	22.8	-0.5
9	TU+	5	2	130.2	0	3.9	0	45.6	-0.6
10	TU+	6	0	130.2	0	3.9	0	45.6	-0.6
11	TU+	6	1	130.2	0	3.9	0	48.7	-0.6
12	TU+	6	2	130.2	0	3.9	0	51.7	-0.6
13	TU+	7	0	124.4	0	34	0	17.5	-0.6
14	TU+	7	1	124.4	0	34	0	29.1	-0.6
15	TU+	7	2	124.4	0	34	0	40.6	-0.6
16	TU+	8	0	193.7	0	0	0	35.1	-0.6
17	TU+	8	1	193.7	0	0	0	35.1	-0.6
18	TU+	8	2	193.7	0	0	0	35.1	-0.6
19	TU+	9	0	193.7	0	0	0	35.1	-0.6
20	TU+	9	1	193.7	0	0	0	35	-0.7
21	TU+	9	2	193.7	0	0	0	34.9	-0.7
22	TU+	10	0	193.7	0	0	0	34.9	-0.7
23	TU+	10	1	193.7	0	0	0	34.8	-0.8
24	TU+	10	2	193.7	0	0	0	34.7	-0.8
25	TU+	11	0	193.7	0	0	0	34.7	-0.8
26	TU+	11	1	193.7	0	0	0	34.7	-0.8
27	TU+	11	2	193.7	0	0	0	34.7	-0.8
28	TU+	12	0	194.9	0	8.1	0	24.3	-0.8
29	TU+	12	1	194.9	0	8.1	0	27	-0.8
30	TU+	12	2	194.9	0	8.1	0	29.7	-0.9
31	TU+	13	0	210	0	-0.6	0	27.4	-0.9
32	TU+	13	1	210	0	-0.6	0	26.2	-0.9
33	TU+	13	2	210	0	-0.6	0	25	-0.9
34	TU+	14	0	210	0	-0.6	0	25	-0.9
35	TU+	14	1	210	0	-0.6	0	21.3	-0.9
36	TU+	14	2	210	0	-0.6	0	17.6	-1
37	TU+	15	0	210	0	-0.5	0	17.6	-1
38	TU+	15	1	210	0	-0.5	0	13.9	-1
39	TU+	15	2	210	0	-0.5	0	10.2	-1.1
40	TU+	16	0	210	0	-0.6	0	10.2	-1.1
41	TU+	16	1	210	0	-0.6	0	9.7	-1.1
42	TU+	16	2	210	0	-0.6	0	9.3	-1.1
43	TU+	17	0	204.8	0	-14.5	0	9.9	-1.1
44	TU+	17	1	204.8	0	-14.5	0	5.1	-1.1
45	TU+	17	2	204.8	0	-14.5	0	0.2	-1.1
46	TU+	18	0	182.7	0	2.2	0	-2.3	-1.1
47	TU+	18	1	182.7	0	2.2	0	1.4	-1.1
48	TU+	18	2	182.7	0	2.2	0	5.1	-1.1
49	TU+	19	0	182.7	0	2.2	0	5.1	-1.1
50	TU+	19	1	182.7	0	2.2	0	21	-1.2
51	TU+	19	2	182.7	0	2.2	0	36.8	-1.2
52	TU+	20	0	182.7	0	2.2	0	36.8	-1.2
53	TU+	20	1	182.7	0	2.2	0	52.7	-1.3
54	TU+	20	2	182.7	0	2.2	0	68.6	-1.3
55	TU+	21	0	182.7	0	2.2	0	68.6	-1.3
56	TU+	21	1	182.7	0	2.2	0	71.4	-1.3
57	TU+	21	2	182.7	0	2.2	0	74.2	-1.4
58	TU+	22	0	141.5	0	-41.5	0	87.4	-1.4
59	TU+	22	1	141.5	0	-41.5	0	73.5	-1.4
60	TU+	22	2	141.5	0	-41.5	0	59.7	-1.4
61	TU+	23	0	110.8	0	-5.3	0	77.2	-1.4
62	TU+	23	1	110.8	0	-5.3	0	71	-1.4
63	TU+	23	2	110.8	0	-5.3	0	64.8	-1.4
64	TU+	24	0	110.8	0	-5.3	0	64.8	-1.4
65	TU+	24	1	110.8	0	-5.3	0	23.2	-1.4
66	TU+	24	2	110.8	0	-5.3	0	-18.3	-1.5
67	TU+	25	0	110.8	0	-5.3	0	-18.3	-1.5
68	TU+	25	1	110.8	0	-5.3	0	-59.9	-1.5
69	TU+	25	2	110.8	0	-5.3	0	-101.5	-1.6
70	TU+	26	0	110.8	0	-5.3	0	-101.5	-1.6
71	TU+	26	1	110.8	0	-5.3	0	-112.1	-1.6
72	TU+	26	2	110.8	0	-5.3	0	-122.8	-1.6

Load (Row) Number	User's Load ID	Member ID	Joint ID	Fx (kips)	Fy (kips)	Fz (kips)	Mx (ft*kip)	My (ft*kip)	Mz (ft*kip)
1	TU+Temp. Diff.	3	0	283.8	0	6.6	0.1	-97.8	-0.3
2	TU+Temp. Diff.	3	1	283.8	0	6.6	0.1	-79.9	-0.4
3	TU+Temp. Diff.	3	2	283.8	0	6.6	0.1	-62	-0.5
4	TU+Temp. Diff.	4	0	283.8	0	6.6	0.1	-62	-0.5
5	TU+Temp. Diff.	4	1	283.8	0	6.6	0.1	-23.8	-0.6
6	TU+Temp. Diff.	4	2	283.8	0	6.6	0.1	14.4	-0.7
7	TU+Temp. Diff.	5	0	283.8	0	6.6	0.1	14.4	-0.7
8	TU+Temp. Diff.	5	1	283.8	0	6.6	0.1	52.6	-0.8
9	TU+Temp. Diff.	5	2	283.8	0	6.6	0.1	90.9	-0.9
10	TU+Temp. Diff.	6	0	283.8	0	6.6	0.1	90.9	-0.9
11	TU+Temp. Diff.	6	1	283.8	0	6.6	0.1	96	-1
12	TU+Temp. Diff.	6	2	283.8	0	6.6	0.1	101.1	-1
13	TU+Temp. Diff.	7	0	273.7	0	60.9	0.1	36.4	-1
14	TU+Temp. Diff.	7	1	273.7	0	60.9	0.1	57.1	-1
15	TU+Temp. Diff.	7	2	273.7	0	60.9	0.1	77.8	-1
16	TU+Temp. Diff.	8	0	397.9	0	0	0.1	67.6	-1
17	TU+Temp. Diff.	8	1	397.9	0	0	0.1	67.6	-1
18	TU+Temp. Diff.	8	2	397.9	0	0	0.1	67.6	-1.1
19	TU+Temp. Diff.	9	0	397.9	0	0	0.1	67.6	-1.1
20	TU+Temp. Diff.	9	1	397.9	0	0	0.1	67.6	-1.2
21	TU+Temp. Diff.	9	2	397.9	0	0	0.1	67.7	-1.3
22	TU+Temp. Diff.	10	0	397.9	0	0	0.1	67.7	-1.3
23	TU+Temp. Diff.	10	1	397.9	0	0	0.1	67.7	-1.5
24	TU+Temp. Diff.	10	2	397.9	0	0	0.1	67.8	-1.6
25	TU+Temp. Diff.	11	0	397.9	0	0	0.1	67.8	-1.6
26	TU+Temp. Diff.	11	1	397.9	0	0	0.1	67.8	-1.6
27	TU+Temp. Diff.	11	2	397.9	0	0	0.1	67.8	-1.6
28	TU+Temp. Diff.	12	0	400	0	4.2	0.1	51.2	-1.6
29	TU+Temp. Diff.	12	1	400	0	4.2	0.1	52.6	-1.6
30	TU+Temp. Diff.	12	2	400	0	4.2	0.1	54	-1.6
31	TU+Temp. Diff.	13	0	409	0	-0.9	0.1	49.7	-1.6
32	TU+Temp. Diff.	13	1	409	0	-0.9	0.1	47.8	-1.7
33	TU+Temp. Diff.	13	2	409	0	-0.9	0.1	46	-1.7
34	TU+Temp. Diff.	14	0	409	0	-0.9	0.1	46	-1.7
35	TU+Temp. Diff.	14	1	409	0	-0.9	0.1	40.1	-1.9
36	TU+Temp. Diff.	14	2	409	0	-0.9	0.1	34.2	-2
37	TU+Temp. Diff.	15	0	409	0	-0.9	0.1	34.2	-2
38	TU+Temp. Diff.	15	1	409	0	-0.9	0.1	28.3	-2.1
39	TU+Temp. Diff.	15	2	409	0	-0.9	0.1	22.4	-2.3
40	TU+Temp. Diff.	16	0	409	0	-0.9	0.1	22.4	-2.3
41	TU+Temp. Diff.	16	1	409	0	-0.9	0.1	21.8	-2.3
42	TU+Temp. Diff.	16	2	409	0	-0.9	0.1	21.1	-2.3
43	TU+Temp. Diff.	17	0	393.2	0	-42.4	0.1	26.8	-2.3
44	TU+Temp. Diff.	17	1	393.2	0	-42.4	0.1	12.6	-2.3
45	TU+Temp. Diff.	17	2	393.2	0	-42.4	0.1	-1.6	-2.3
46	TU+Temp. Diff.	18	0	332.7	0	2.9	0.1	-3.1	-2.3
47	TU+Temp. Diff.	18	1	332.7	0	2.9	0.1	1.9	-2.3
48	TU+Temp. Diff.	18	2	332.7	0	2.9	0.1	7	-2.4
49	TU+Temp. Diff.	19	0	332.7	0	2.9	0.1	7	-2.4
50	TU+Temp. Diff.	19	1	332.7	0	2.9	0.1	28.4	-2.5
51	TU+Temp. Diff.	19	2	332.7	0	2.9	0.1	49.8	-2.6
52	TU+Temp. Diff.	20	0	332.7	0	2.9	0.1	49.8	-2.6
53	TU+Temp. Diff.	20	1	332.7	0	2.9	0.1	71.3	-2.8
54	TU+Temp. Diff.	20	2	332.7	0	2.9	0.1	92.7	-2.9
55	TU+Temp. Diff.	21	0	332.7	0	2.9	0.1	92.7	-2.9
56	TU+Temp. Diff.	21	1	332.7	0	2.9	0.1	96.5	-2.9
57	TU+Temp. Diff.	21	2	332.7	0	2.9	0.1	100.2	-3
58	TU+Temp. Diff.	22	0	249.9	0	-85.4	0.1	119.4	-3
59	TU+Temp. Diff.	22	1	249.9	0	-85.4	0.1	90.8	-3
60	TU+Temp. Diff.	22	2	249.9	0	-85.4	0.1	62.2	-3
61	TU+Temp. Diff.	23	0	183.8	0	-7.3	0.1	93.7	-3
62	TU+Temp. Diff.	23	1	183.8	0	-7.3	0.1	85.2	-3
63	TU+Temp. Diff.	23	2	183.8	0	-7.3	0.1	76.7	-3
64	TU+Temp. Diff.	24	0	183.8	0	-7.3	0.1	76.7	-3
65	TU+Temp. Diff.	24	1	183.8	0	-7.3	0.1	19.9	-3.2
66	TU+Temp. Diff.	24	2	183.8	0	-7.3	0.1	-36.9	-3.3
67	TU+Temp. Diff.	25	0	183.8	0	-7.3	0.1	-36.9	-3.3
68	TU+Temp. Diff.	25	1	183.8	0	-7.3	0.1	-93.7	-3.4
69	TU+Temp. Diff.	25	2	183.8	0	-7.3	0.1	-150.6	-3.6
70	TU+Temp. Diff.	26	0	183.8	0	-7.3	0.1	-150.6	-3.6
71	TU+Temp. Diff.	26	1	183.8	0	-7.3	0.1	-165.1	-3.6
72	TU+Temp. Diff.	26	2	183.8	0	-7.3	0.1	-179.7	-3.6

PT Column: AASHTO LRFD Column Analysis
Figg Bridge Engineers, Inc.
Short Column Analysis - Individual Load Cases
File Name: Deck_STRI_No PT Axial.ptc

Short Column Analysis - Individual Load Case Results

Load No.	Cross Section ID	Pu (kips)	Mux (ft*kip)	Muy (ft*kip)	Mu (ft*kip)	ϕMn (ft*kip)	ϕMn/Mu
1	Deck	-4757.2	-249.6	17.0	250.2	3068.1	12.264
2	Deck	-815.5	-764.8	-21.0	765.1	4954.6	6.476
3	Deck	-1874.2	-119.4	3.0	119.4	4525.3	37.889
4	Deck	-1832.5	-590.4	-1390.1	1510.3	11354.2	7.518
5	Deck	-1280.2	1252.4	6.4	1252.4	4726.1	3.774
6	Deck	-3168.6	-192.6	1078.2	1095.3	22720.2	20.744
7	Deck	-1628.8	-1093.2	-20.9	1093.4	4627.4	4.232
8	Deck	-1214.5	-590.9	-1787.4	1882.5	14756.2	7.838
9	Deck	-940.6	-766.1	-1782.1	1939.8	12154.0	6.266
10	Deck	-366.5	101.2	0.7	101.2	5078.3	50.180
11	Deck	-2282.3	-541.7	-77.3	547.2	4394.3	8.031
12	Deck	-1259.3	-993.0	43.9	994.0	4782.6	4.812
13	Deck	-815.5	-764.8	-21.0	765.1	4954.6	6.476
14	Deck	-1901.8	-1221.3	1.4	1221.3	4512.6	3.695
15	Deck	-1214.5	-590.9	-1787.4	1882.5	14756.2	7.838
16	Deck	-2980.1	-0.1	4.4	4.4	76689.5	17424.936
17	Deck	-603.0	116.7	0.3	116.7	4990.5	42.763
18	Deck	-3780.1	1.1	2.1	2.4	7401.7	3122.227

MIN C/D = 3.69

Section ID: Deck

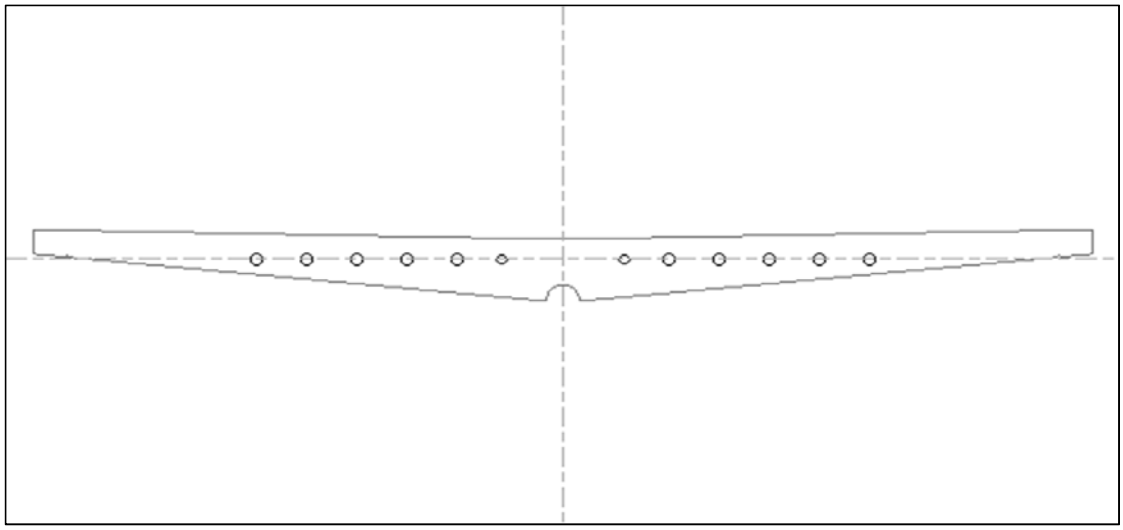

Material Properties

f'c (ksi)	= 8.5	Strain @ Ult.	= 0.003
f''c (ksi)	= 7.12	Strain @ Max.	= 0.0024
fy (ksi)	= 60	E Conc. (ksi)	= 4781
fr (ksi)	= 0.7	E Rebar (ksi)	= 29000
Tendon fpu (ksi)	= 270	E Tendon (ksi)	= 28500
PT Bar fpu (ksi)	= 150	E PT Bar (ksi)	= 29000
Gamma	= 0.15		

Section Properties

Ix (in^4)	= 257511	Iy (in^4)	= 62104874
Y top (in)	= 11.1529	X lft (in)	= 190
Y bot (in)	= 16.7676	X rgt (in)	= 190
Area (in^2)	= 6576.95	Ixy (in^4)	= 0

Cross Section Coordinates

** Exterior Boundary Coordinates **

Point No.	X (in)	Y (in)	Point No.	X (in)	Y (in)
1	-190	11.15	2	-180	11.15
3	-10.5	7.76	4	10.5	7.76
5	180	11.15	6	190	11.15
7	190	1.63	8	178.5	0.46
9	178	0.91	10	177.5	0.36
11	9	-16.77	12	6	-16.77
13	-6	-16.77	14	-9	-16.77
15	-177.5	0.36	16	-178	0.91
17	-178.5	0.46	18	-190	1.63

Tendon Information

Tendon No.	X (in)	Y (in)	Dia. (in)	Area (in^2)	Fsi (ksi)
1	-22	-0.36	3.5	2.6	216
2	-38	-0.36	4.5	4.12	216
3	-56	-0.36	4.5	4.12	216
4	-74	-0.36	4.5	4.12	216
5	-92	-0.36	4.5	4.12	216
6	-110	-0.36	4.5	4.12	216
7	22	-0.36	3.5	2.6	216
8	38	-0.36	4.5	4.12	216
9	56	-0.36	4.5	4.12	216
10	74	-0.36	4.5	4.12	216
11	92	-0.36	4.5	4.12	216
12	110	-0.36	4.5	4.12	216

AASHTO Limit State: STR 1 - STRENGTH I

Max/ Min ID	Load Num	Member Num	Joint Num	Limit State/ Combo ID	Fx (kips)	Fy (kips)	Fz (kips)	Mx (ft*kip)	My (ft*kip)	Mz (ft*kip)	Mxy (ft*kip)	Mxz (ft*kip)	Myz (ft*kip)
Max Fx	47	44	1	STR 1/ 156	1779.3	1.3	117.3	0.3	364.5	-36.3	364.5	36.3	366.3
Max Fy	1	29	0	STR 1/ 52	844.8	35.5	529.7	-590.6	-1932.2	-1616.5	2020.4	1721.0	2519.2
Max Fz	1	29	0	STR 1/ 21	655.9	1.1	594.6	0.0	-2283.7	-109.9	2283.7	109.9	2286.4
Max Mx	72	52	2	STR 1/ 54	1395.7	-8.1	-222.4	558.3	-639.3	-8.3	848.7	558.4	639.3
Max My	6	30	2	STR 1/ 3	457.1	1.0	3.9	-0.1	1253.9	-75.5	1253.9	75.5	1256.1
Max Mz	27	37	2	STR 1/ 171	567.9	9.0	-11.2	115.0	117.3	305.3	164.2	326.2	327.0
Max Mxy	1	29	0	STR 1/ 21	655.9	1.1	594.6	0.0	-2283.7	-109.9	2283.7	109.9	2286.4
Max Mxz	1	29	0	STR 1/ 52	844.8	35.5	529.7	-590.6	-1932.2	-1616.5	2020.4	1721.0	2519.2
Max Myz	1	29	0	STR 1/ 25	410.5	35.4	546.0	-590.7	-1981.9	-1605.1	2068.0	1710.3	2550.3
Min Fx	1	29	0	STR 1/ 56	-168.0	0.0	435.1	0.0	-1149.8	-15.3	1149.8	15.3	1149.9
Min Fy	61	49	0	STR 1/ 63	578.3	-8.7	-8.3	329.1	304.0	106.6	448.0	345.9	322.1
Min Fz	60	48	2	STR 1/ 156	1349.0	1.3	-298.8	0.5	721.6	-19.9	721.6	19.9	721.9
Min Mx	1	29	0	STR 1/ 9	419.8	22.3	539.4	-633.2	-1829.8	-639.2	1936.2	899.7	1938.2
Min My	1	29	0	STR 1/ 21	655.9	1.1	594.6	0.0	-2283.7	-109.9	2283.7	109.9	2286.4
Min Mz	1	29	0	STR 1/ 52	844.8	35.5	529.7	-590.6	-1932.2	-1616.5	2020.4	1721.0	2519.2
Min Mxy	31	39	0	STR 1/ 176	755.5	0.5	62.5	-0.1	-0.2	-22.2	0.2	22.2	22.2
Min Mxz	72	52	2	STR 1/ 56	307.6	0.0	-125.1	0.1	-523.0	-0.8	523.0	0.8	523.0
Min Myz	66	50	2	STR 1/ 56	311.0	0.0	-43.8	0.1	1.1	-1.9	1.1	1.9	2.2

Limit State: STRENGTH I

FR Friction
LF: 1
FR1: CR+SH+PT_EOC
FR2: CR+SH+PT_D10K

TU Uniform Temperature
LF: 0.5
TU1: TU-
TU2: TU+
TU3: TU+Temp. Diff.

DW DL Wearing Surfaces & Utilities
LF1: 1.5
LF2: 0.65
DW1: DW

LL Vehicular Live Load
LF: 1.75
LL1: LL1_Deck
LL2: LL2_Deck
LL3: LL3_Deck
LL4: LL1_Roof
LL5: LL2_Roof
LL6: LL3_Roof
LL7: LL1_Deck Offset
LL8: LL2_Deck Offset
LL9: LL3_Deck Offset

DC DL Structural Components & Attachments
LF1: 1.25
LF2: 0.9
DC1: DC

Load (Row) Number	User's Load ID	Member ID	Joint ID	Fx (kips)	Fy (kips)	Fz (kips)	Mx (ft*kip)	My (ft*kip)	Mz (ft*kip)
1	CR+SH+PT_D10K	29	0	540.8	-0.1	265.2	0.1	-152	4.1
2	CR+SH+PT_D10K	29	1	553.8	-0.1	-8.6	0.1	200.7	4
3	CR+SH+PT_D10K	29	2	552.6	-0.1	-9.2	0.1	182.3	3.9
4	CR+SH+PT_D10K	30	0	552.6	-0.1	-9.2	0.1	182.3	3.9
5	CR+SH+PT_D10K	30	1	550.3	-0.1	-9.2	0.1	110	3.5
6	CR+SH+PT_D10K	30	2	549.6	-0.1	-9.2	0.1	37.6	3.1
7	CR+SH+PT_D10K	31	0	549.6	-0.1	-9.2	0.1	37.6	3.1
8	CR+SH+PT_D10K	31	1	548.8	-0.1	-9.2	0.1	-34.7	2.6
9	CR+SH+PT_D10K	31	2	547.4	-0.1	-9.2	0.1	-107.1	2.2
10	CR+SH+PT_D10K	32	0	547.4	-0.1	-9.2	0.1	-107.1	2.2
11	CR+SH+PT_D10K	32	1	547.1	-0.1	-9.2	0.1	-117.7	2.2
12	CR+SH+PT_D10K	32	2	537.2	-0.1	-9.2	0.1	-128.3	2.1
13	CR+SH+PT_D10K	33	0	556.7	-0.1	153.6	0.1	-144.7	2.1
14	CR+SH+PT_D10K	33	1	547	-0.1	153.6	0.1	-121.7	2.1
15	CR+SH+PT_D10K	33	2	546.5	-0.1	153.6	0.1	-98.7	2.1
16	CR+SH+PT_D10K	34	0	548.3	-0.1	13.5	0.1	-202.6	2.1
17	CR+SH+PT_D10K	34	1	547.8	-0.1	13.5	0.1	-191.4	2
18	CR+SH+PT_D10K	34	2	547.5	-0.1	13.5	0.1	-180.3	2
19	CR+SH+PT_D10K	35	0	547.5	-0.1	13.5	0.1	-180.3	2
20	CR+SH+PT_D10K	35	1	546.9	-0.1	13.5	0.1	-146	1.9
21	CR+SH+PT_D10K	35	2	546.4	-0.1	13.5	0.1	-111.7	1.7
22	CR+SH+PT_D10K	36	0	546.4	-0.1	13.5	0.1	-111.7	1.7
23	CR+SH+PT_D10K	36	1	545.9	-0.1	13.5	0.1	-77.3	1.6
24	CR+SH+PT_D10K	36	2	545.5	-0.1	13.5	0.1	-43	1.5
25	CR+SH+PT_D10K	37	0	545.5	-0.1	13.5	0.1	-43	1.5
26	CR+SH+PT_D10K	37	1	545.3	-0.1	13.5	0.1	-25.2	1.4
27	CR+SH+PT_D10K	37	2	537.2	-0.1	13.5	0.1	-7.4	1.3
28	CR+SH+PT_D10K	38	0	628.4	-0.1	229.1	0.1	-55.3	1.3
29	CR+SH+PT_D10K	38	1	620.5	-0.1	229.1	0.1	-21	1.3
30	CR+SH+PT_D10K	38	2	621.1	-0.1	229.1	0.1	13.4	1.3
31	CR+SH+PT_D10K	39	0	610.5	-0.1	19.4	0.1	-141.8	1.3
32	CR+SH+PT_D10K	39	1	611.1	-0.1	19.4	0.1	-126.7	1.3
33	CR+SH+PT_D10K	39	2	610.9	-0.1	19.4	0.1	-111.5	1.2
34	CR+SH+PT_D10K	40	0	610.9	-0.1	19.4	0.1	-111.5	1.2
35	CR+SH+PT_D10K	40	1	610.5	-0.1	19.4	0.1	-66.6	1.1
36	CR+SH+PT_D10K	40	2	610	-0.1	19.4	0.1	-21.6	1
37	CR+SH+PT_D10K	41	0	610	-0.1	19.4	0.1	-21.6	1
38	CR+SH+PT_D10K	41	1	609.6	-0.1	19.4	0.1	23.5	0.9
39	CR+SH+PT_D10K	41	2	609.2	-0.1	19.4	0.1	68.6	0.8
40	CR+SH+PT_D10K	42	0	609.2	-0.1	19.4	0.1	68.6	0.8
41	CR+SH+PT_D10K	42	1	608.9	-0.1	19.4	0.1	96.5	0.7
42	CR+SH+PT_D10K	42	2	602.7	-0.1	19.4	0.1	124.4	0.6
43	CR+SH+PT_D10K	43	0	702.1	-0.1	233.8	0.2	72.4	0.6
44	CR+SH+PT_D10K	43	1	696.2	-0.1	233.8	0.2	107.5	0.6
45	CR+SH+PT_D10K	43	2	696.6	-0.1	233.8	0.2	142.6	0.6
46	CR+SH+PT_D10K	44	0	674	0	27.5	0.2	-22	0.6
47	CR+SH+PT_D10K	44	1	674.4	0	27.5	0.2	-0.8	0.6
48	CR+SH+PT_D10K	44	2	674.1	0	27.5	0.2	20.4	0.5
49	CR+SH+PT_D10K	45	0	674.1	0	27.5	0.2	20.4	0.5
50	CR+SH+PT_D10K	45	1	673.7	0	27.5	0.2	79.8	0.4
51	CR+SH+PT_D10K	45	2	673	0	27.5	0.2	139.1	0.4
52	CR+SH+PT_D10K	46	0	673	0	27.5	0.2	139.1	0.4
53	CR+SH+PT_D10K	46	1	672.4	0	27.5	0.2	198.4	0.3
54	CR+SH+PT_D10K	46	2	671.6	0	27.5	0.2	257.6	0.2
55	CR+SH+PT_D10K	47	0	671.6	0	27.5	0.2	257.6	0.2
56	CR+SH+PT_D10K	47	1	671.1	0	27.5	0.2	299.8	0.1
57	CR+SH+PT_D10K	47	2	669.3	0	27.5	0.2	342	0
58	CR+SH+PT_D10K	48	0	675.3	0	157	0.2	309.9	0
59	CR+SH+PT_D10K	48	1	673.8	0	157	0.2	333.4	0
60	CR+SH+PT_D10K	48	2	673.9	0	157	0.2	357	0
61	CR+SH+PT_D10K	49	0	654.6	0	-6.7	0.3	245.1	0
62	CR+SH+PT_D10K	49	1	654.7	0	-6.7	0.3	240	0
63	CR+SH+PT_D10K	49	2	654.1	0	-6.7	0.3	234.8	-0.1
64	CR+SH+PT_D10K	50	0	654.1	0	-6.7	0.3	234.8	-0.1
65	CR+SH+PT_D10K	50	1	653.4	0	-6.7	0.3	221.3	-0.2
66	CR+SH+PT_D10K	50	2	652.7	0	-6.7	0.3	207.7	-0.2
67	CR+SH+PT_D10K	51	0	652.7	0	-6.7	0.3	207.7	-0.2
68	CR+SH+PT_D10K	51	1	651.9	0	-6.7	0.3	194.1	-0.3
69	CR+SH+PT_D10K	51	2	651.5	0	-6.7	0.3	180.6	-0.4
70	CR+SH+PT_D10K	52	0	651.5	0	-6.7	0.3	180.6	-0.4
71	CR+SH+PT_D10K	52	1	651.2	0	-6.7	0.3	169.8	-0.4
72	CR+SH+PT_D10K	52	2	651.3	0	-31.1	0.3	158.1	-0.5

Load (Row) Number	User's Load ID	Member ID	Joint ID	Fx (kips)	Fy (kips)	Fz (kips)	Mx (ft*kip)	My (ft*kip)	Mz (ft*kip)
1	CR+SH+PT_EOC	29	0	106.5	-0.2	281.5	0	-201.7	15.5
2	CR+SH+PT_EOC	29	1	115	-0.2	-6.5	0	174.3	15.2
3	CR+SH+PT_EOC	29	2	114.3	-0.2	-7.1	0	160.2	14.8
4	CR+SH+PT_EOC	30	0	114.3	-0.2	-7.1	0	160.2	14.8
5	CR+SH+PT_EOC	30	1	113	-0.2	-7.1	0	104.2	13.5
6	CR+SH+PT_EOC	30	2	112.6	-0.2	-7.1	0	48.2	12.2
7	CR+SH+PT_EOC	31	0	112.6	-0.2	-7.1	0	48.2	12.2
8	CR+SH+PT_EOC	31	1	112.2	-0.2	-7.1	0	-7.8	10.8
9	CR+SH+PT_EOC	31	2	111.3	-0.2	-7.1	0	-63.8	9.5
10	CR+SH+PT_EOC	32	0	111.3	-0.2	-7.1	0	-63.8	9.5
11	CR+SH+PT_EOC	32	1	111.1	-0.2	-7.1	0	-72	9.3
12	CR+SH+PT_EOC	32	2	104.2	-0.2	-7.1	0	-80.2	9.1
13	CR+SH+PT_EOC	33	0	110.2	-0.2	138.4	0	-95.7	9.1
14	CR+SH+PT_EOC	33	1	103.5	-0.2	138.4	0	-74.9	9.1
15	CR+SH+PT_EOC	33	2	103.1	-0.2	138.4	0	-54.1	9.1
16	CR+SH+PT_EOC	34	0	104.1	-0.2	11.2	0	-150.5	9.1
17	CR+SH+PT_EOC	34	1	103.7	-0.2	11.2	0	-141.2	8.9
18	CR+SH+PT_EOC	34	2	103.6	-0.2	11.2	0	-131.9	8.8
19	CR+SH+PT_EOC	35	0	103.6	-0.2	11.2	0	-131.9	8.8
20	CR+SH+PT_EOC	35	1	103.2	-0.2	11.2	0	-103.3	8.4
21	CR+SH+PT_EOC	35	2	102.9	-0.2	11.2	0	-74.6	7.9
22	CR+SH+PT_EOC	36	0	102.9	-0.2	11.2	0	-74.6	7.9
23	CR+SH+PT_EOC	36	1	102.7	-0.2	11.2	0	-45.9	7.5
24	CR+SH+PT_EOC	36	2	102.4	-0.2	11.2	0	-17.2	7.1
25	CR+SH+PT_EOC	37	0	102.4	-0.2	11.2	0	-17.2	7.1
26	CR+SH+PT_EOC	37	1	102.3	-0.2	11.2	0	-2.4	6.8
27	CR+SH+PT_EOC	37	2	96.6	-0.2	11.2	0	12.4	6.6
28	CR+SH+PT_EOC	38	0	151.8	-0.2	190	0.1	-27.1	6.6
29	CR+SH+PT_EOC	38	1	146.2	-0.2	190	0.1	1.4	6.6
30	CR+SH+PT_EOC	38	2	146.7	-0.2	190	0.1	29.9	6.6
31	CR+SH+PT_EOC	39	0	140.3	-0.2	14.3	0.1	-106.3	6.6
32	CR+SH+PT_EOC	39	1	140.7	-0.2	14.3	0.1	-95.1	6.4
33	CR+SH+PT_EOC	39	2	140.6	-0.2	14.3	0.1	-84	6.3
34	CR+SH+PT_EOC	40	0	140.6	-0.2	14.3	0.1	-84	6.3
35	CR+SH+PT_EOC	40	1	140.3	-0.2	14.3	0.1	-50.9	5.9
36	CR+SH+PT_EOC	40	2	140	-0.2	14.3	0.1	-17.7	5.5
37	CR+SH+PT_EOC	41	0	140	-0.2	14.3	0.1	-17.7	5.5
38	CR+SH+PT_EOC	41	1	139.8	-0.2	14.3	0.1	15.5	5.2
39	CR+SH+PT_EOC	41	2	139.5	-0.2	14.3	0.1	48.7	4.8
40	CR+SH+PT_EOC	42	0	139.5	-0.2	14.3	0.1	48.7	4.8
41	CR+SH+PT_EOC	42	1	139.3	-0.2	14.3	0.1	69.2	4.5
42	CR+SH+PT_EOC	42	2	134.6	-0.2	14.3	0.1	89.8	4.3
43	CR+SH+PT_EOC	43	0	208.1	-0.2	205.2	0.1	41.9	4.3
44	CR+SH+PT_EOC	43	1	203.5	-0.2	205.2	0.1	72.6	4.3
45	CR+SH+PT_EOC	43	2	203.9	-0.2	205.2	0.1	103.4	4.3
46	CR+SH+PT_EOC	44	0	186.9	-0.2	17.5	0.1	-56.5	4.2
47	CR+SH+PT_EOC	44	1	187.3	-0.2	17.5	0.1	-43	4.1
48	CR+SH+PT_EOC	44	2	187.1	-0.2	17.5	0.1	-29.5	4
49	CR+SH+PT_EOC	45	0	187.1	-0.2	17.5	0.1	-29.5	4
50	CR+SH+PT_EOC	45	1	186.8	-0.2	17.5	0.1	8.4	3.6
51	CR+SH+PT_EOC	45	2	186.4	-0.2	17.5	0.1	46.2	3.3
52	CR+SH+PT_EOC	46	0	186.4	-0.2	17.5	0.1	46.2	3.3
53	CR+SH+PT_EOC	46	1	186.1	-0.2	17.5	0.1	84	2.9
54	CR+SH+PT_EOC	46	2	185.7	-0.2	17.5	0.1	121.8	2.6
55	CR+SH+PT_EOC	47	0	185.7	-0.2	17.5	0.1	121.8	2.6
56	CR+SH+PT_EOC	47	1	185.4	-0.2	17.5	0.1	148.7	2.3
57	CR+SH+PT_EOC	47	2	182.7	-0.2	17.5	0.1	175.6	2.1
58	CR+SH+PT_EOC	48	0	236.4	-0.2	186.5	0.1	125.9	2.1
59	CR+SH+PT_EOC	48	1	233.9	-0.2	186.5	0.1	153.8	2.1
60	CR+SH+PT_EOC	48	2	234.4	-0.2	186.5	0.1	181.8	2
61	CR+SH+PT_EOC	49	0	212.2	-0.2	1.4	0.1	21.1	2
62	CR+SH+PT_EOC	49	1	212.6	-0.2	1.4	0.1	22.1	1.9
63	CR+SH+PT_EOC	49	2	212.3	-0.2	1.4	0.1	23.2	1.8
64	CR+SH+PT_EOC	50	0	212.3	-0.2	1.4	0.1	23.2	1.8
65	CR+SH+PT_EOC	50	1	212	-0.2	1.4	0.1	26	1.4
66	CR+SH+PT_EOC	50	2	211.6	-0.2	1.4	0.1	28.9	1.1
67	CR+SH+PT_EOC	51	0	211.6	-0.2	1.4	0.1	28.9	1.1
68	CR+SH+PT_EOC	51	1	211.3	-0.2	1.4	0.1	31.7	0.8
69	CR+SH+PT_EOC	51	2	211.1	-0.2	1.4	0.1	34.5	0.5
70	CR+SH+PT_EOC	52	0	211.1	-0.2	1.4	0.1	34.5	0.5
71	CR+SH+PT_EOC	52	1	211	-0.2	1.4	0.1	36.8	0.2
72	CR+SH+PT_EOC	52	2	207.6	-0.2	-24.3	0.1	38	-0.1

Load (Row) Number	User's Load ID	Member ID	Joint ID	Fx (kips)	Fy (kips)	Fz (kips)	Mx (ft*kip)	My (ft*kip)	Mz (ft*kip)
1	DC	29	0	357.8	0.7	153.9	-0.2	-1028.2	-69.9
2	DC	29	1	358	0.7	139.2	-0.2	-731.3	-68.4
3	DC	29	2	358.1	0.7	124.6	-0.2	-464.2	-66.9
4	DC	30	0	358.1	0.7	124.6	-0.2	-464.2	-66.9
5	DC	30	1	358.7	0.7	67.7	-0.2	289.6	-61.2
6	DC	30	2	359.2	0.7	10.9	-0.2	598	-55.4
7	DC	31	0	359.2	0.7	10.9	-0.2	598	-55.4
8	DC	31	1	359.8	0.7	-45.9	-0.2	460.9	-49.6
9	DC	31	2	360.4	0.7	-102.7	-0.2	-121.7	-43.9
10	DC	32	0	360.4	0.7	-102.7	-0.2	-121.7	-43.9
11	DC	32	1	360.5	0.7	-111.1	-0.2	-244.6	-43
12	DC	32	2	360.5	0.7	-119.4	-0.2	-377.1	-42.2
13	DC	33	0	581.5	0.7	158.1	-0.2	-371.9	-42.2
14	DC	33	1	581.5	0.7	157	-0.2	-348.2	-42.1
15	DC	33	2	581.5	0.7	156	-0.2	-324.8	-42
16	DC	34	0	584.3	0.7	86	-0.2	-348.6	-42
17	DC	34	1	584.3	0.7	80	-0.2	-280.1	-41.4
18	DC	34	2	584.4	0.7	74.1	-0.2	-216.5	-40.8
19	DC	35	0	584.4	0.7	74.1	-0.2	-216.5	-40.8
20	DC	35	1	584.6	0.7	55.6	-0.2	-51.3	-38.9
21	DC	35	2	584.8	0.7	37.1	-0.2	66.9	-37.1
22	DC	36	0	584.8	0.7	37.1	-0.2	66.9	-37.1
23	DC	36	1	585	0.7	18.6	-0.2	138	-35.2
24	DC	36	2	585.1	0.7	0.1	-0.2	161.8	-33.4
25	DC	37	0	585.1	0.7	0.1	-0.2	161.8	-33.4
26	DC	37	1	585.2	0.7	-9.5	-0.2	155.6	-32.4
27	DC	37	2	585.3	0.7	-19.1	-0.2	136.7	-31.4
28	DC	38	0	633.8	0.7	23.6	-0.2	112.5	-31.4
29	DC	38	1	633.8	0.7	22.5	-0.2	115.9	-31.3
30	DC	38	2	633.8	0.7	21.4	-0.2	119.2	-31.2
31	DC	39	0	639.1	0.7	48.5	-0.2	117.7	-31.2
32	DC	39	1	639.2	0.7	42.8	-0.2	153.3	-30.7
33	DC	39	2	639.3	0.7	37.2	-0.2	184.5	-30.1
34	DC	40	0	639.3	0.7	37.2	-0.2	184.5	-30.1
35	DC	40	1	639.4	0.7	20.4	-0.2	251.3	-28.4
36	DC	40	2	639.6	0.7	3.6	-0.2	279.1	-26.7
37	DC	41	0	639.6	0.7	3.6	-0.2	279.1	-26.7
38	DC	41	1	639.8	0.7	-13.3	-0.2	267.7	-25
39	DC	41	2	639.9	0.7	-30.1	-0.2	217.2	-23.3
40	DC	42	0	639.9	0.7	-30.1	-0.2	217.2	-23.3
41	DC	42	1	640	0.7	-40.6	-0.2	166.3	-22.3
42	DC	42	2	640.1	0.7	-51	-0.2	100.4	-21.2
43	DC	43	0	560.2	0.7	-128.3	-0.2	118.8	-21.2
44	DC	43	1	560.2	0.7	-129.4	-0.2	99.5	-21.1
45	DC	43	2	560.2	0.7	-130.5	-0.2	80	-21
46	DC	44	0	606.7	0.7	49.7	-0.1	168.5	-21
47	DC	44	1	606.8	0.7	44.1	-0.1	204.6	-20.5
48	DC	44	2	606.8	0.7	38.6	-0.1	236.5	-19.9
49	DC	45	0	606.8	0.7	38.6	-0.1	236.5	-19.9
50	DC	45	1	607	0.7	22.9	-0.1	302.8	-18.3
51	DC	45	2	607.1	0.7	7.3	-0.1	335.4	-16.7
52	DC	46	0	607.1	0.7	7.3	-0.1	335.4	-16.7
53	DC	46	1	607.3	0.7	-8.4	-0.1	334.2	-15.1
54	DC	46	2	607.5	0.7	-24	-0.1	299.3	-13.6
55	DC	47	0	607.5	0.7	-24	-0.1	299.3	-13.6
56	DC	47	1	607.6	0.7	-35.1	-0.1	254	-12.4
57	DC	47	2	607.7	0.7	-46.2	-0.1	191.6	-11.3
58	DC	48	0	362.8	0.7	-254.4	-0.1	254.4	-11.3
59	DC	48	1	362.8	0.7	-255.4	-0.1	216.2	-11.2
60	DC	48	2	362.8	0.7	-256.5	-0.1	177.8	-11.1
61	DC	49	0	442.3	0.7	-17.1	0	351.2	-11.1
62	DC	49	1	442.4	0.7	-22.6	0	335.9	-10.5
63	DC	49	2	442.4	0.7	-28.2	0	316.3	-9.9
64	DC	50	0	442.4	0.7	-28.2	0	316.3	-9.9
65	DC	50	1	442.6	0.7	-43	0	243.8	-8.4
66	DC	50	2	442.7	0.7	-57.7	0	141.4	-6.9
67	DC	51	0	442.7	0.7	-57.7	0	141.4	-6.9
68	DC	51	1	442.9	0.7	-72.5	0	8.9	-5.4
69	DC	51	2	443	0.7	-87.2	0	-153.6	-3.9
70	DC	52	0	443	0.7	-87.2	0	-153.6	-3.9
71	DC	52	1	443.1	0.7	-98.9	0	-303.9	-2.7
72	DC	52	2	443.2	0.7	-110.6	0	-473.1	-1.5

Load (Row) Number	User's Load ID	Member ID	Joint ID	Fx (kips)	Fy (kips)	Fz (kips)	Mx (ft*kip)	My (ft*kip)	Mz (ft*kip)
1	DW	29	0	-58.9	0	14.3	0	-82.9	-0.1
2	DW	29	1	-58.8	0	12.8	0	-55.5	-0.1
3	DW	29	2	-58.8	0	11.3	0	-31.2	-0.1
4	DW	30	0	-58.8	0	11.3	0	-31.2	-0.1
5	DW	30	1	-58.8	0	5.5	0	34.4	-0.1
6	DW	30	2	-58.7	0	-0.3	0	54.7	-0.1
7	DW	31	0	-58.7	0	-0.3	0	54.7	-0.1
8	DW	31	1	-58.6	0	-6.1	0	29.6	-0.1
9	DW	31	2	-58.6	0	-11.9	0	-40.8	-0.1
10	DW	32	0	-58.6	0	-11.9	0	-40.8	-0.1
11	DW	32	1	-58.6	0	-12.7	0	-55	-0.1
12	DW	32	2	-58.6	0	-13.6	0	-70.1	-0.1
13	DW	33	0	-45	0	4.2	0	-66.1	-0.1
14	DW	33	1	-45	0	4.1	0	-65.5	-0.1
15	DW	33	2	-45	0	4	0	-64.9	-0.1
16	DW	34	0	-44.9	0	9.1	0	-62.8	-0.1
17	DW	34	1	-44.9	0	8.5	0	-55.5	-0.1
18	DW	34	2	-44.9	0	7.9	0	-48.7	-0.1
19	DW	35	0	-44.9	0	7.9	0	-48.7	-0.1
20	DW	35	1	-44.9	0	6	0	-30.9	-0.1
21	DW	35	2	-44.9	0	4.2	0	-17.9	-0.1
22	DW	36	0	-44.9	0	4.2	0	-17.9	-0.1
23	DW	36	1	-44.8	0	2.3	0	-9.7	-0.1
24	DW	36	2	-44.8	0	0.4	0	-6.3	-0.1
25	DW	37	0	-44.8	0	0.4	0	-6.3	-0.1
26	DW	37	1	-44.8	0	-0.6	0	-6.5	-0.1
27	DW	37	2	-44.8	0	-1.6	0	-7.9	-0.1
28	DW	38	0	-36.2	0	7.1	0	-10.6	0
29	DW	38	1	-36.2	0	7	0	-9.5	0
30	DW	38	2	-36.2	0	6.9	0	-8.5	0
31	DW	39	0	-35.9	0	5.3	0	-13.3	0
32	DW	39	1	-35.9	0	4.8	0	-9.4	0
33	DW	39	2	-35.9	0	4.2	0	-5.9	0
34	DW	40	0	-35.9	0	4.2	0	-5.9	0
35	DW	40	1	-35.9	0	2.5	0	1.8	0
36	DW	40	2	-35.9	0	0.8	0	5.6	0
37	DW	41	0	-35.9	0	0.8	0	5.6	0
38	DW	41	1	-35.8	0	-0.9	0	5.4	0
39	DW	41	2	-35.8	0	-2.7	0	1.2	0
40	DW	42	0	-35.8	0	-2.7	0	1.2	0
41	DW	42	1	-35.8	0	-3.7	0	-3.4	0
42	DW	42	2	-35.8	0	-4.8	0	-9.5	0
43	DW	43	0	-23.3	0	6.7	0	-11.1	0
44	DW	43	1	-23.3	0	6.6	0	-10.1	0
45	DW	43	2	-23.3	0	6.5	0	-9.1	0
46	DW	44	0	-22.9	0	5.8	0	-14	0
47	DW	44	1	-22.9	0	5.2	0	-9.8	0
48	DW	44	2	-22.9	0	4.7	0	-5.9	0
49	DW	45	0	-22.9	0	4.7	0	-5.9	0
50	DW	45	1	-22.9	0	3.1	0	2.4	0
51	DW	45	2	-22.8	0	1.5	0	7.4	0
52	DW	46	0	-22.8	0	1.5	0	7.4	0
53	DW	46	1	-22.8	0	-0.1	0	8.8	0
54	DW	46	2	-22.8	0	-1.7	0	6.9	0
55	DW	47	0	-22.8	0	-1.7	0	6.9	0
56	DW	47	1	-22.8	0	-2.8	0	3.4	0
57	DW	47	2	-22.8	0	-4	0	-1.8	0
58	DW	48	0	-12.4	0	4.8	0	-3.1	0
59	DW	48	1	-12.4	0	4.7	0	-2.4	0
60	DW	48	2	-12.4	0	4.6	0	-1.7	0
61	DW	49	0	-13.4	0	0.9	0	-5.4	0
62	DW	49	1	-13.4	0	0.3	0	-5	0
63	DW	49	2	-13.4	0	-0.3	0	-4.9	0
64	DW	50	0	-13.4	0	-0.3	0	-4.9	0
65	DW	50	1	-13.4	0	-1.8	0	-7	0
66	DW	50	2	-13.4	0	-3.3	0	-12.1	0
67	DW	51	0	-13.4	0	-3.3	0	-12.1	0
68	DW	51	1	-13.4	0	-4.8	0	-20.3	0
69	DW	51	2	-13.3	0	-6.3	0	-31.5	0
70	DW	52	0	-13.3	0	-6.3	0	-31.5	0
71	DW	52	1	-13.3	0	-7.5	0	-42.6	0
72	DW	52	2	-13.3	0	-8.6	0	-55.6	0

Load (Row) Number	User's Load ID	Member ID	Joint ID	Fx (kips)	Fy (kips)	Fz (kips)	Mx (ft*kip)	My (ft*kip)	Mz (ft*kip)
1	LL1_Deck	29	0	-215.3	0	52.1	0.1	-303.2	-0.3
2	LL1_Deck	29	1	-215.3	0	46.7	0.1	-203.1	-0.3
3	LL1_Deck	29	2	-215.2	0	41.2	0.1	-114.1	-0.3
4	LL1_Deck	30	0	-215.2	0	41.2	0.1	-114.1	-0.3
5	LL1_Deck	30	1	-215	0	20	0.1	126	-0.3
6	LL1_Deck	30	2	-214.8	0	-1.1	0.1	200.2	-0.3
7	LL1_Deck	31	0	-214.8	0	-1.1	0.1	200.2	-0.3
8	LL1_Deck	31	1	-214.6	0	-22.3	0.1	108.4	-0.3
9	LL1_Deck	31	2	-214.4	0	-43.5	0.1	-149.4	-0.2
10	LL1_Deck	32	0	-214.4	0	-43.5	0.1	-149.4	-0.2
11	LL1_Deck	32	1	-214.3	0	-46.6	0.1	-201.1	-0.2
12	LL1_Deck	32	2	-214.3	0	-49.7	0.1	-256.5	-0.2
13	LL1_Deck	33	0	-164.5	0	15.5	0.1	-241.9	-0.2
14	LL1_Deck	33	1	-164.5	0	15.1	0.1	-239.6	-0.2
15	LL1_Deck	33	2	-164.5	0	14.7	0.1	-237.4	-0.2
16	LL1_Deck	34	0	-164.3	0	33.4	0.1	-229.6	-0.2
17	LL1_Deck	34	1	-164.3	0	31.2	0.1	-203	-0.2
18	LL1_Deck	34	2	-164.3	0	29	0.1	-178.1	-0.2
19	LL1_Deck	35	0	-164.3	0	29	0.1	-178.1	-0.2
20	LL1_Deck	35	1	-164.2	0	22.1	0.1	-113.1	-0.2
21	LL1_Deck	35	2	-164.1	0	15.2	0.1	-65.5	-0.2
22	LL1_Deck	36	0	-164.1	0	15.2	0.1	-65.5	-0.2
23	LL1_Deck	36	1	-164.1	0	8.3	0.1	-35.5	-0.2
24	LL1_Deck	36	2	-164	0	1.4	0.1	-23.1	-0.2
25	LL1_Deck	37	0	-164	0	1.4	0.1	-23.1	-0.2
26	LL1_Deck	37	1	-164	0	-2.2	0.1	-23.6	-0.2
27	LL1_Deck	37	2	-163.9	0	-5.7	0.1	-28.8	-0.2
28	LL1_Deck	38	0	-132.4	0	26.2	0.1	-38.7	-0.2
29	LL1_Deck	38	1	-132.4	0	25.7	0.1	-34.8	-0.2
30	LL1_Deck	38	2	-132.4	0	25.3	0.1	-30.9	-0.2
31	LL1_Deck	39	0	-131.4	0	19.6	0.1	-48.8	-0.2
32	LL1_Deck	39	1	-131.3	0	17.5	0.1	-34.4	-0.2
33	LL1_Deck	39	2	-131.3	0	15.3	0.1	-21.6	-0.2
34	LL1_Deck	40	0	-131.3	0	15.3	0.1	-21.6	-0.2
35	LL1_Deck	40	1	-131.3	0	9.1	0.1	6.8	-0.2
36	LL1_Deck	40	2	-131.2	0	2.8	0.1	20.6	-0.2
37	LL1_Deck	41	0	-131.2	0	2.8	0.1	20.6	-0.2
38	LL1_Deck	41	1	-131.1	0	-3.5	0.1	19.8	-0.2
39	LL1_Deck	41	2	-131.1	0	-9.7	0.1	4.5	-0.1
40	LL1_Deck	42	0	-131.1	0	-9.7	0.1	4.5	-0.1
41	LL1_Deck	42	1	-131	0	-13.6	0.1	-12.4	-0.1
42	LL1_Deck	42	2	-131	0	-17.5	0.1	-34.8	-0.1
43	LL1_Deck	43	0	-85.3	0	24.4	0.1	-40.5	-0.1
44	LL1_Deck	43	1	-85.3	0	24	0.1	-36.9	-0.1
45	LL1_Deck	43	2	-85.3	0	23.6	0.1	-33.3	-0.1
46	LL1_Deck	44	0	-83.7	0	21.3	0.2	-51.2	-0.1
47	LL1_Deck	44	1	-83.7	0	19.2	0.2	-35.7	-0.1
48	LL1_Deck	44	2	-83.7	0	17.1	0.2	-21.7	-0.1
49	LL1_Deck	45	0	-83.7	0	17.1	0.2	-21.7	-0.1
50	LL1_Deck	45	1	-83.6	0	11.3	0.2	8.9	-0.1
51	LL1_Deck	45	2	-83.6	0	5.4	0.2	26.9	-0.1
52	LL1_Deck	46	0	-83.6	0	5.4	0.2	26.9	-0.1
53	LL1_Deck	46	1	-83.5	0	-0.4	0.2	32.4	-0.1
54	LL1_Deck	46	2	-83.5	0	-6.2	0.2	25.3	-0.1
55	LL1_Deck	47	0	-83.5	0	-6.2	0.2	25.3	-0.1
56	LL1_Deck	47	1	-83.4	0	-10.4	0.2	12.6	-0.1
57	LL1_Deck	47	2	-83.4	0	-14.5	0.2	-6.5	-0.1
58	LL1_Deck	48	0	-45.3	0	17.5	0.2	-11.4	-0.1
59	LL1_Deck	48	1	-45.3	0	17.1	0.2	-8.8	-0.1
60	LL1_Deck	48	2	-45.3	0	16.7	0.2	-6.3	-0.1
61	LL1_Deck	49	0	-49.1	0	3.2	0.2	-19.8	-0.1
62	LL1_Deck	49	1	-49.1	0	1.1	0.2	-18.2	-0.1
63	LL1_Deck	49	2	-49	0	-0.9	0.2	-18.1	-0.1
64	LL1_Deck	50	0	-49	0	-0.9	0.2	-18.1	-0.1
65	LL1_Deck	50	1	-49	0	-6.4	0.2	-25.6	-0.1
66	LL1_Deck	50	2	-48.9	0	-11.9	0.2	-44.3	-0.1
67	LL1_Deck	51	0	-48.9	0	-11.9	0.2	-44.3	-0.1
68	LL1_Deck	51	1	-48.9	0	-17.4	0.2	-74.2	0
69	LL1_Deck	51	2	-48.8	0	-22.9	0.2	-115.2	0
70	LL1_Deck	52	0	-48.8	0	-22.9	0.2	-115.2	0
71	LL1_Deck	52	1	-48.8	0	-27.3	0.2	-155.8	0
72	LL1_Deck	52	2	-48.7	0	-31.6	0.2	-203.4	0

Load (Row) Number	User's Load ID	Member ID	Joint ID	Fx (kips)	Fy (kips)	Fz (kips)	Mx (ft*kip)	My (ft*kip)	Mz (ft*kip)
1	LL1_Deck Offset	29	0	-107.6	19.8	26.1	-337.4	-151.6	-870.3
2	LL1_Deck Offset	29	1	-107.6	19.8	23.3	-316.9	-101.5	-830.4
3	LL1_Deck Offset	29	2	-107.5	19.8	20.6	-296.4	-57	-790.4
4	LL1_Deck Offset	30	0	-107.5	19.8	20.6	-296.4	-57	-790.4
5	LL1_Deck Offset	30	1	-107.4	19.8	10	-217	63	-635.7
6	LL1_Deck Offset	30	2	-107.3	19.8	-0.6	-137.5	100.1	-480.9
7	LL1_Deck Offset	31	0	-107.3	19.8	-0.6	-137.5	100.1	-480.9
8	LL1_Deck Offset	31	1	-107.2	19.8	-11.1	-58.1	54.2	-326.2
9	LL1_Deck Offset	31	2	-107.1	19.8	-21.7	21.3	-74.7	-171.5
10	LL1_Deck Offset	32	0	-107.1	19.8	-21.7	21.3	-74.7	-171.5
11	LL1_Deck Offset	32	1	-107.1	19.8	-23.3	32.9	-100.6	-148.8
12	LL1_Deck Offset	32	2	-107.1	19.8	-24.8	44.6	-128.2	-126.1
13	LL1_Deck Offset	33	0	-82.2	16.6	7.7	0.9	-121	-148.3
14	LL1_Deck Offset	33	1	-82.2	16.6	7.5	2.4	-119.8	-145.8
15	LL1_Deck Offset	33	2	-82.2	16.6	7.3	3.9	-118.7	-143.4
16	LL1_Deck Offset	34	0	-82.1	11.2	16.7	-65.7	-114.8	-145.1
17	LL1_Deck Offset	34	1	-82.1	11.2	15.6	-57.4	-101.5	-135.9
18	LL1_Deck Offset	34	2	-82.1	11.2	14.5	-49	-89.1	-126.8
19	LL1_Deck Offset	35	0	-82.1	11.2	14.5	-49	-89.1	-126.8
20	LL1_Deck Offset	35	1	-82	11.2	11	-23.2	-56.5	-98.4
21	LL1_Deck Offset	35	2	-82	11.2	7.6	2.7	-32.8	-70.1
22	LL1_Deck Offset	36	0	-82	11.2	7.6	2.7	-32.8	-70.1
23	LL1_Deck Offset	36	1	-82	11.2	4.1	28.5	-17.7	-41.8
24	LL1_Deck Offset	36	2	-81.9	11.2	0.7	54.4	-11.6	-13.4
25	LL1_Deck Offset	37	0	-81.9	11.2	0.7	54.4	-11.6	-13.4
26	LL1_Deck Offset	37	1	-81.9	11.2	-1.1	67.8	-11.8	1.3
27	LL1_Deck Offset	37	2	-81.9	11.2	-2.9	81.2	-14.4	15.9
28	LL1_Deck Offset	38	0	-66.1	9.3	13.1	48.6	-19.3	-0.9
29	LL1_Deck Offset	38	1	-66.1	9.3	12.9	50.1	-17.4	0.5
30	LL1_Deck Offset	38	2	-66.1	9.3	12.7	51.6	-15.5	1.9
31	LL1_Deck Offset	39	0	-65.6	4.7	9.8	-10.3	-24.4	-6.9
32	LL1_Deck Offset	39	1	-65.6	4.7	8.7	-2.4	-17.2	-3.3
33	LL1_Deck Offset	39	2	-65.6	4.7	7.7	5.5	-10.8	0.2
34	LL1_Deck Offset	40	0	-65.6	4.7	7.7	5.5	-10.8	0.2
35	LL1_Deck Offset	40	1	-65.6	4.7	4.5	29	3.4	10.8
36	LL1_Deck Offset	40	2	-65.5	4.7	1.4	52.5	10.3	21.4
37	LL1_Deck Offset	41	0	-65.5	4.7	1.4	52.5	10.3	21.4
38	LL1_Deck Offset	41	1	-65.5	4.7	-1.7	76.1	9.9	32
39	LL1_Deck Offset	41	2	-65.5	4.7	-4.9	99.6	2.2	42.6
40	LL1_Deck Offset	42	0	-65.5	4.7	-4.9	99.6	2.2	42.6
41	LL1_Deck Offset	42	1	-65.5	4.7	-6.8	114.2	-6.2	49.1
42	LL1_Deck Offset	42	2	-65.4	4.7	-8.8	128.8	-17.4	55.7
43	LL1_Deck Offset	43	0	-42.6	3.5	12.2	106.1	-20.3	44.1
44	LL1_Deck Offset	43	1	-42.6	3.5	12	107.6	-18.4	44.6
45	LL1_Deck Offset	43	2	-42.6	3.5	11.8	109.1	-16.7	45.1
46	LL1_Deck Offset	44	0	-41.8	0.1	10.6	62.4	-25.6	34.6
47	LL1_Deck Offset	44	1	-41.8	0.1	9.6	70.2	-17.8	34.6
48	LL1_Deck Offset	44	2	-41.8	0.1	8.5	78	-10.8	34.6
49	LL1_Deck Offset	45	0	-41.8	0.1	8.5	78	-10.8	34.6
50	LL1_Deck Offset	45	1	-41.8	0.1	5.6	99.9	4.5	34.5
51	LL1_Deck Offset	45	2	-41.7	0.1	2.7	121.8	13.5	34.5
52	LL1_Deck Offset	46	0	-41.7	0.1	2.7	121.8	13.5	34.5
53	LL1_Deck Offset	46	1	-41.7	0.1	-0.2	143.6	16.2	34.4
54	LL1_Deck Offset	46	2	-41.7	0.1	-3.1	165.5	12.6	34.3
55	LL1_Deck Offset	47	0	-41.7	0.1	-3.1	165.5	12.6	34.3
56	LL1_Deck Offset	47	1	-41.7	0.1	-5.2	181	6.3	34.3
57	LL1_Deck Offset	47	2	-41.6	0.1	-7.2	196.6	-3.2	34.2
58	LL1_Deck Offset	48	0	-22.6	-0.3	8.7	185.4	-5.7	29.4
59	LL1_Deck Offset	48	1	-22.6	-0.3	8.5	186.9	-4.4	29.3
60	LL1_Deck Offset	48	2	-22.6	-0.3	8.3	188.5	-3.1	29.2
61	LL1_Deck Offset	49	0	-24.5	-2	1.6	164.9	-9.9	22.4
62	LL1_Deck Offset	49	1	-24.5	-2	0.6	172.7	-9	20.8
63	LL1_Deck Offset	49	2	-24.5	-2	-0.5	180.5	-9	19.1
64	LL1_Deck Offset	50	0	-24.5	-2	-0.5	180.5	-9	19.1
65	LL1_Deck Offset	50	1	-24.5	-2	-3.2	201.1	-12.8	14.8
66	LL1_Deck Offset	50	2	-24.4	-2	-6	221.7	-22.1	10.5
67	LL1_Deck Offset	51	0	-24.4	-2	-6	221.7	-22.1	10.5
68	LL1_Deck Offset	51	1	-24.4	-2	-8.7	242.3	-37.1	6.2
69	LL1_Deck Offset	51	2	-24.4	-2	-11.5	262.9	-57.6	1.8
70	LL1_Deck Offset	52	0	-24.4	-2	-11.5	262.9	-57.6	1.8
71	LL1_Deck Offset	52	1	-24.4	-2	-13.6	279.3	-77.9	-1.6
72	LL1_Deck Offset	52	2	-24.3	-2	-15.8	295.7	-101.7	-5

Load (Row) Number	User's Load ID	Member ID	Joint ID	Fx (kips)	Fy (kips)	Fz (kips)	Mx (ft*kip)	My (ft*kip)	Mz (ft*kip)
1	LL1_Roof	29	0	-18.8	0	0	0	-1.3	0.5
2	LL1_Roof	29	1	-18.8	0	0	0	-1.2	0.5
3	LL1_Roof	29	2	-18.8	0	0	0	-1.2	0.5
4	LL1_Roof	30	0	-18.8	0	0	0	-1.2	0.5
5	LL1_Roof	30	1	-18.8	0	0	0	-1.1	0.4
6	LL1_Roof	30	2	-18.8	0	0	0	-0.9	0.4
7	LL1_Roof	31	0	-18.8	0	0	0	-0.9	0.4
8	LL1_Roof	31	1	-18.8	0	0	0	-0.8	0.3
9	LL1_Roof	31	2	-18.8	0	0	0	-0.7	0.3
10	LL1_Roof	32	0	-18.8	0	0	0	-0.7	0.3
11	LL1_Roof	32	1	-18.8	0	0	0	-0.6	0.3
12	LL1_Roof	32	2	-18.8	0	0	0	-0.6	0.3
13	LL1_Roof	33	0	-16.4	0	3.2	0	-0.6	0.3
14	LL1_Roof	33	1	-16.4	0	3.2	0	-0.1	0.3
15	LL1_Roof	33	2	-16.4	0	3.2	0	0.4	0.3
16	LL1_Roof	34	0	-16.2	0	0	0	-1.9	0.3
17	LL1_Roof	34	1	-16.2	0	0	0	-1.8	0.3
18	LL1_Roof	34	2	-16.2	0	0	0	-1.8	0.3
19	LL1_Roof	35	0	-16.2	0	0	0	-1.8	0.3
20	LL1_Roof	35	1	-16.2	0	0	0	-1.7	0.3
21	LL1_Roof	35	2	-16.2	0	0	0	-1.6	0.3
22	LL1_Roof	36	0	-16.2	0	0	0	-1.6	0.3
23	LL1_Roof	36	1	-16.2	0	0	0	-1.5	0.2
24	LL1_Roof	36	2	-16.2	0	0	0	-1.4	0.2
25	LL1_Roof	37	0	-16.2	0	0	0	-1.4	0.2
26	LL1_Roof	37	1	-16.2	0	0	0	-1.4	0.2
27	LL1_Roof	37	2	-16.2	0	0	0	-1.3	0.2
28	LL1_Roof	38	0	-10.9	0	5.4	0	-2.6	0.2
29	LL1_Roof	38	1	-10.9	0	5.4	0	-1.8	0.2
30	LL1_Roof	38	2	-10.9	0	5.4	0	-1	0.2
31	LL1_Roof	39	0	-11.5	0	0.3	0	-3.8	0.2
32	LL1_Roof	39	1	-11.5	0	0.3	0	-3.5	0.2
33	LL1_Roof	39	2	-11.5	0	0.3	0	-3.3	0.2
34	LL1_Roof	40	0	-11.5	0	0.3	0	-3.3	0.2
35	LL1_Roof	40	1	-11.5	0	0.3	0	-2.6	0.2
36	LL1_Roof	40	2	-11.5	0	0.3	0	-2	0.2
37	LL1_Roof	41	0	-11.5	0	0.3	0	-2	0.2
38	LL1_Roof	41	1	-11.5	0	0.3	0	-1.3	0.2
39	LL1_Roof	41	2	-11.5	0	0.3	0	-0.7	0.2
40	LL1_Roof	42	0	-11.5	0	0.3	0	-0.7	0.2
41	LL1_Roof	42	1	-11.5	0	0.3	0	-0.2	0.2
42	LL1_Roof	42	2	-11.5	0	0.3	0	0.2	0.1
43	LL1_Roof	43	0	-5.5	0	5.7	0	-1.3	0.1
44	LL1_Roof	43	1	-5.5	0	5.7	0	-0.4	0.1
45	LL1_Roof	43	2	-5.5	0	5.7	0	0.5	0.1
46	LL1_Roof	44	0	-6.8	0	0.6	0	-2.9	0.1
47	LL1_Roof	44	1	-6.8	0	0.6	0	-2.4	0.1
48	LL1_Roof	44	2	-6.8	0	0.6	0	-1.9	0.1
49	LL1_Roof	45	0	-6.8	0	0.6	0	-1.9	0.1
50	LL1_Roof	45	1	-6.8	0	0.6	0	-0.6	0.1
51	LL1_Roof	45	2	-6.8	0	0.6	0	0.7	0.1
52	LL1_Roof	46	0	-6.8	0	0.6	0	0.7	0.1
53	LL1_Roof	46	1	-6.8	0	0.6	0	2.1	0.1
54	LL1_Roof	46	2	-6.8	0	0.6	0	3.4	0.1
55	LL1_Roof	47	0	-6.8	0	0.6	0	3.4	0.1
56	LL1_Roof	47	1	-6.8	0	0.6	0	4.3	0.1
57	LL1_Roof	47	2	-6.8	0	0.6	0	5.3	0.1
58	LL1_Roof	48	0	-0.8	0	5.5	0	4.2	0.1
59	LL1_Roof	48	1	-0.8	0	5.5	0	5	0.1
60	LL1_Roof	48	2	-0.8	0	5.5	0	5.8	0.1
61	LL1_Roof	49	0	-2.7	0	-0.2	0	2.2	0.1
62	LL1_Roof	49	1	-2.7	0	-0.2	0	2.1	0.1
63	LL1_Roof	49	2	-2.7	0	-0.2	0	1.9	0.1
64	LL1_Roof	50	0	-2.7	0	-0.2	0	1.9	0.1
65	LL1_Roof	50	1	-2.7	0	-0.2	0	1.5	0.1
66	LL1_Roof	50	2	-2.7	0	-0.2	0	1.1	0
67	LL1_Roof	51	0	-2.7	0	-0.2	0	1.1	0
68	LL1_Roof	51	1	-2.7	0	-0.2	0	0.6	0
69	LL1_Roof	51	2	-2.7	0	-0.2	0	0.2	0
70	LL1_Roof	52	0	-2.7	0	-0.2	0	0.2	0
71	LL1_Roof	52	1	-2.7	0	-0.2	0	-0.1	0
72	LL1_Roof	52	2	-2.7	0	-0.2	0	-0.5	0

Load (Row) Number	User's Load ID	Member ID	Joint ID	Fx (kips)	Fy (kips)	Fz (kips)	Mx (ft*kip)	My (ft*kip)	Mz (ft*kip)
1	LL2_Deck	29	0	-247.9	-0.2	-1.8	0.1	20.9	15.6
2	LL2_Deck	29	1	-247.9	-0.2	-1.8	0.1	17.4	15.3
3	LL2_Deck	29	2	-247.9	-0.2	-1.8	0.1	13.8	15
4	LL2_Deck	30	0	-247.9	-0.2	-1.8	0.1	13.8	15
5	LL2_Deck	30	1	-247.9	-0.2	-1.8	0.1	-0.1	13.7
6	LL2_Deck	30	2	-247.9	-0.2	-1.8	0.1	-13.9	12.4
7	LL2_Deck	31	0	-247.9	-0.2	-1.8	0.1	-13.9	12.4
8	LL2_Deck	31	1	-247.9	-0.2	-1.8	0.1	-27.7	11.2
9	LL2_Deck	31	2	-247.9	-0.2	-1.8	0.1	-41.6	9.9
10	LL2_Deck	32	0	-247.9	-0.2	-1.8	0.1	-41.6	9.9
11	LL2_Deck	32	1	-247.9	-0.2	-1.8	0.1	-43.6	9.7
12	LL2_Deck	32	2	-247.9	-0.2	-1.8	0.1	-45.6	9.5
13	LL2_Deck	33	0	-245.2	-0.2	1.8	0.1	-45.9	9.5
14	LL2_Deck	33	1	-245.2	-0.2	1.8	0.1	-45.6	9.5
15	LL2_Deck	33	2	-245.2	-0.2	1.8	0.1	-45.3	9.5
16	LL2_Deck	34	0	-244.8	-0.2	0.8	0.1	-48	9.5
17	LL2_Deck	34	1	-244.8	-0.2	0.8	0.1	-47.3	9.4
18	LL2_Deck	34	2	-244.8	-0.2	0.8	0.1	-46.7	9.2
19	LL2_Deck	35	0	-244.8	-0.2	0.8	0.1	-46.7	9.2
20	LL2_Deck	35	1	-244.8	-0.2	0.8	0.1	-44.7	8.8
21	LL2_Deck	35	2	-244.8	-0.2	0.8	0.1	-42.7	8.4
22	LL2_Deck	36	0	-244.8	-0.2	0.8	0.1	-42.7	8.4
23	LL2_Deck	36	1	-244.8	-0.2	0.8	0.1	-40.8	8
24	LL2_Deck	36	2	-244.8	-0.2	0.8	0.1	-38.8	7.6
25	LL2_Deck	37	0	-244.8	-0.2	0.8	0.1	-38.8	7.6
26	LL2_Deck	37	1	-244.8	-0.2	0.8	0.1	-37.8	7.3
27	LL2_Deck	37	2	-244.8	-0.2	0.8	0.1	-36.7	7.1
28	LL2_Deck	38	0	-217.2	-0.2	29	0.1	-44.3	7.1
29	LL2_Deck	38	1	-217.2	-0.2	29	0.1	-39.9	7.1
30	LL2_Deck	38	2	-217.2	-0.2	29	0.1	-35.6	7.1
31	LL2_Deck	39	0	-220.1	-0.2	1.9	0	-53.8	7.1
32	LL2_Deck	39	1	-220.1	-0.2	1.9	0	-52.3	7
33	LL2_Deck	39	2	-220.1	-0.2	1.9	0	-50.9	6.8
34	LL2_Deck	40	0	-220.1	-0.2	1.9	0	-50.9	6.8
35	LL2_Deck	40	1	-220.1	-0.2	1.9	0	-46.5	6.5
36	LL2_Deck	40	2	-220.1	-0.2	1.9	0	-42.2	6.1
37	LL2_Deck	41	0	-220.1	-0.2	1.9	0	-42.2	6.1
38	LL2_Deck	41	1	-220.1	-0.2	1.9	0	-37.8	5.7
39	LL2_Deck	41	2	-220.1	-0.2	1.9	0	-33.4	5.3
40	LL2_Deck	42	0	-220.1	-0.2	1.9	0	-33.4	5.3
41	LL2_Deck	42	1	-220.1	-0.2	1.9	0	-30.8	5.1
42	LL2_Deck	42	2	-220.1	-0.2	1.9	0	-28.1	4.8
43	LL2_Deck	43	0	-164.5	-0.2	52.3	0	-41.2	4.8
44	LL2_Deck	43	1	-164.5	-0.2	52.3	0	-33.4	4.8
45	LL2_Deck	43	2	-164.5	-0.2	52.3	0	-25.5	4.8
46	LL2_Deck	44	0	-176	-0.2	2.4	0	-59.9	4.8
47	LL2_Deck	44	1	-176	-0.2	2.4	0	-58	4.7
48	LL2_Deck	44	2	-176	-0.2	2.4	0	-56.1	4.5
49	LL2_Deck	45	0	-176	-0.2	2.4	0	-56.1	4.5
50	LL2_Deck	45	1	-176	-0.2	2.4	0	-50.9	4.2
51	LL2_Deck	45	2	-176	-0.2	2.4	0	-45.6	3.8
52	LL2_Deck	46	0	-176	-0.2	2.4	0	-45.6	3.8
53	LL2_Deck	46	1	-176	-0.2	2.4	0	-40.4	3.5
54	LL2_Deck	46	2	-176	-0.2	2.4	0	-35.2	3.1
55	LL2_Deck	47	0	-176	-0.2	2.4	0	-35.2	3.1
56	LL2_Deck	47	1	-176	-0.2	2.4	0	-31.4	2.9
57	LL2_Deck	47	2	-176	-0.2	2.4	0	-27.7	2.6
58	LL2_Deck	48	0	-97.3	-0.2	67.8	0	-48.1	2.6
59	LL2_Deck	48	1	-97.3	-0.2	67.8	0	-38	2.6
60	LL2_Deck	48	2	-97.3	-0.2	67.8	0	-27.8	2.5
61	LL2_Deck	49	0	-118.1	-0.2	3.9	0	-74.1	2.5
62	LL2_Deck	49	1	-118.1	-0.2	3.9	0	-71.1	2.4
63	LL2_Deck	49	2	-118.1	-0.2	3.9	0	-68.1	2.3
64	LL2_Deck	50	0	-118.1	-0.2	3.9	0	-68.1	2.3
65	LL2_Deck	50	1	-118.1	-0.2	3.9	0	-60.2	1.9
66	LL2_Deck	50	2	-118.1	-0.2	3.9	0	-52.2	1.6
67	LL2_Deck	51	0	-118.1	-0.2	3.9	0	-52.2	1.6
68	LL2_Deck	51	1	-118.1	-0.2	3.9	0	-44.3	1.2
69	LL2_Deck	51	2	-118.1	-0.2	3.9	0	-36.3	0.9
70	LL2_Deck	52	0	-118.1	-0.2	3.9	0	-36.3	0.9
71	LL2_Deck	52	1	-118.1	-0.2	3.9	0	-30	0.6
72	LL2_Deck	52	2	-118.1	-0.2	3.9	0	-23.7	0.4

Load (Row) Number	User's Load ID	Member ID	Joint ID	Fx (kips)	Fy (kips)	Fz (kips)	Mx (ft*kip)	My (ft*kip)	Mz (ft*kip)
1	LL2_Deck Offset	29	0	-124	7.4	-0.9	24.3	10.5	-543.4
2	LL2_Deck Offset	29	1	-124	7.4	-0.9	24.3	8.7	-528.4
3	LL2_Deck Offset	29	2	-124	7.4	-0.9	24.3	6.9	-513.4
4	LL2_Deck Offset	30	0	-124	7.4	-0.9	24.3	6.9	-513.4
5	LL2_Deck Offset	30	1	-124	7.4	-0.9	24.3	0	-455.3
6	LL2_Deck Offset	30	2	-124	7.4	-0.9	24.3	-6.9	-397.1
7	LL2_Deck Offset	31	0	-124	7.4	-0.9	24.3	-6.9	-397.1
8	LL2_Deck Offset	31	1	-124	7.4	-0.9	24.3	-13.9	-339
9	LL2_Deck Offset	31	2	-124	7.4	-0.9	24.3	-20.8	-280.9
10	LL2_Deck Offset	32	0	-124	7.4	-0.9	24.3	-20.8	-280.9
11	LL2_Deck Offset	32	1	-124	7.4	-0.9	24.3	-21.8	-272.3
12	LL2_Deck Offset	32	2	-124	7.4	-0.9	24.3	-22.8	-263.8
13	LL2_Deck Offset	33	0	-122.6	6.9	0.9	21.4	-22.9	-265.1
14	LL2_Deck Offset	33	1	-122.6	6.9	0.9	21.4	-22.8	-264.1
15	LL2_Deck Offset	33	2	-122.6	6.9	0.9	21.4	-22.7	-263
16	LL2_Deck Offset	34	0	-122.4	6.3	0.4	15.4	-24	-261.6
17	LL2_Deck Offset	34	1	-122.4	6.3	0.4	15.4	-23.7	-256.4
18	LL2_Deck Offset	34	2	-122.4	6.3	0.4	15.4	-23.4	-251.1
19	LL2_Deck Offset	35	0	-122.4	6.3	0.4	15.4	-23.4	-251.1
20	LL2_Deck Offset	35	1	-122.4	6.3	0.4	15.4	-22.4	-235
21	LL2_Deck Offset	35	2	-122.4	6.3	0.4	15.4	-21.4	-218.8
22	LL2_Deck Offset	36	0	-122.4	6.3	0.4	15.4	-21.4	-218.8
23	LL2_Deck Offset	36	1	-122.4	6.3	0.4	15.4	-20.4	-202.6
24	LL2_Deck Offset	36	2	-122.4	6.3	0.4	15.4	-19.4	-186.4
25	LL2_Deck Offset	37	0	-122.4	6.3	0.4	15.4	-19.4	-186.4
26	LL2_Deck Offset	37	1	-122.4	6.3	0.4	15.4	-18.9	-178.1
27	LL2_Deck Offset	37	2	-122.4	6.3	0.4	15.4	-18.4	-169.7
28	LL2_Deck Offset	38	0	-108.6	6	14.5	12.3	-22.1	-171.2
29	LL2_Deck Offset	38	1	-108.6	6	14.5	12.3	-20	-170.3
30	LL2_Deck Offset	38	2	-108.6	6	14.5	12.3	-17.8	-169.4
31	LL2_Deck Offset	39	0	-110.1	5.4	0.9	5.3	-26.9	-169.2
32	LL2_Deck Offset	39	1	-110.1	5.4	0.9	5.3	-26.2	-165
33	LL2_Deck Offset	39	2	-110.1	5.4	0.9	5.3	-25.4	-160.8
34	LL2_Deck Offset	40	0	-110.1	5.4	0.9	5.3	-25.4	-160.8
35	LL2_Deck Offset	40	1	-110.1	5.4	0.9	5.3	-23.3	-148.4
36	LL2_Deck Offset	40	2	-110.1	5.4	0.9	5.3	-21.1	-135.9
37	LL2_Deck Offset	41	0	-110.1	5.4	0.9	5.3	-21.1	-135.9
38	LL2_Deck Offset	41	1	-110.1	5.4	0.9	5.3	-18.9	-123.4
39	LL2_Deck Offset	41	2	-110.1	5.4	0.9	5.3	-16.7	-110.9
40	LL2_Deck Offset	42	0	-110.1	5.4	0.9	5.3	-16.7	-110.9
41	LL2_Deck Offset	42	1	-110.1	5.4	0.9	5.3	-15.4	-103.1
42	LL2_Deck Offset	42	2	-110.1	5.4	0.9	5.3	-14	-95.4
43	LL2_Deck Offset	43	0	-82.3	5.1	26.1	1.5	-20.6	-97.4
44	LL2_Deck Offset	43	1	-82.3	5.1	26.1	1.5	-16.7	-96.6
45	LL2_Deck Offset	43	2	-82.3	5.1	26.1	1.5	-12.8	-95.9
46	LL2_Deck Offset	44	0	-88	4.4	1.2	-7	-29.9	-96.8
47	LL2_Deck Offset	44	1	-88	4.4	1.2	-7	-29	-93.4
48	LL2_Deck Offset	44	2	-88	4.4	1.2	-7	-28.1	-90.1
49	LL2_Deck Offset	45	0	-88	4.4	1.2	-7	-28.1	-90.1
50	LL2_Deck Offset	45	1	-88	4.4	1.2	-7	-25.4	-80.6
51	LL2_Deck Offset	45	2	-88	4.4	1.2	-7	-22.8	-71.1
52	LL2_Deck Offset	46	0	-88	4.4	1.2	-7	-22.8	-71.1
53	LL2_Deck Offset	46	1	-88	4.4	1.2	-7	-20.2	-61.7
54	LL2_Deck Offset	46	2	-88	4.4	1.2	-7	-17.6	-52.3
55	LL2_Deck Offset	47	0	-88	4.4	1.2	-7	-17.6	-52.3
56	LL2_Deck Offset	47	1	-88	4.4	1.2	-7	-15.7	-45.5
57	LL2_Deck Offset	47	2	-88	4.4	1.2	-7	-13.9	-38.8
58	LL2_Deck Offset	48	0	-48.6	4	33.9	-12	-24.1	-41.7
59	LL2_Deck Offset	48	1	-48.6	4	33.9	-12	-19	-41.1
60	LL2_Deck Offset	48	2	-48.6	4	33.9	-12	-13.9	-40.5
61	LL2_Deck Offset	49	0	-59	3.2	2	-23.2	-37.1	-42.7
62	LL2_Deck Offset	49	1	-59	3.2	2	-23.2	-35.6	-40.3
63	LL2_Deck Offset	49	2	-59	3.2	2	-23.2	-34.1	-37.9
64	LL2_Deck Offset	50	0	-59	3.2	2	-23.2	-34.1	-37.9
65	LL2_Deck Offset	50	1	-59	3.2	2	-23.2	-30.1	-31.4
66	LL2_Deck Offset	50	2	-59	3.2	2	-23.2	-26.1	-24.9
67	LL2_Deck Offset	51	0	-59	3.2	2	-23.2	-26.1	-24.9
68	LL2_Deck Offset	51	1	-59	3.2	2	-23.2	-22.1	-18.5
69	LL2_Deck Offset	51	2	-59	3.2	2	-23.2	-18.2	-12
70	LL2_Deck Offset	52	0	-59	3.2	2	-23.2	-18.2	-12
71	LL2_Deck Offset	52	1	-59	3.2	2	-23.2	-15	-6.9
72	LL2_Deck Offset	52	2	-59	3.2	2	-23.2	-11.9	-1.7

Load (Row) Number	User's Load ID	Member ID	Joint ID	Fx (kips)	Fy (kips)	Fz (kips)	Mx (ft*kip)	My (ft*kip)	Mz (ft*kip)
1	LL2_Roof	29	0	-28.3	0	-0.3	0	4.4	1.8
2	LL2_Roof	29	1	-28.3	0	-0.3	0	3.8	1.8
3	LL2_Roof	29	2	-28.3	0	-0.3	0	3.3	1.7
4	LL2_Roof	30	0	-28.3	0	-0.3	0	3.3	1.7
5	LL2_Roof	30	1	-28.3	0	-0.3	0	1.1	1.6
6	LL2_Roof	30	2	-28.3	0	-0.3	0	-1.1	1.4
7	LL2_Roof	31	0	-28.3	0	-0.3	0	-1.1	1.4
8	LL2_Roof	31	1	-28.3	0	-0.3	0	-3.3	1.3
9	LL2_Roof	31	2	-28.3	0	-0.3	0	-5.5	1.2
10	LL2_Roof	32	0	-28.3	0	-0.3	0	-5.5	1.2
11	LL2_Roof	32	1	-28.3	0	-0.3	0	-5.8	1.1
12	LL2_Roof	32	2	-28.3	0	-0.3	0	-6.1	1.1
13	LL2_Roof	33	0	-28	0	0.1	0	-6.1	1.1
14	LL2_Roof	33	1	-28	0	0.1	0	-6.1	1.1
15	LL2_Roof	33	2	-28	0	0.1	0	-6.1	1.1
16	LL2_Roof	34	0	-28	0	0.1	0	-6.3	1.1
17	LL2_Roof	34	1	-28	0	0.1	0	-6.1	1.1
18	LL2_Roof	34	2	-28	0	0.1	0	-6	1.1
19	LL2_Roof	35	0	-28	0	0.1	0	-6	1.1
20	LL2_Roof	35	1	-28	0	0.1	0	-5.7	1
21	LL2_Roof	35	2	-28	0	0.1	0	-5.3	1
22	LL2_Roof	36	0	-28	0	0.1	0	-5.3	1
23	LL2_Roof	36	1	-28	0	0.1	0	-4.9	0.9
24	LL2_Roof	36	2	-28	0	0.1	0	-4.6	0.9
25	LL2_Roof	37	0	-28	0	0.1	0	-4.6	0.9
26	LL2_Roof	37	1	-28	0	0.1	0	-4.4	0.9
27	LL2_Roof	37	2	-28	0	0.1	0	-4.2	0.8
28	LL2_Roof	38	0	-24.9	0	3.4	0	-5.1	0.8
29	LL2_Roof	38	1	-24.9	0	3.4	0	-4.6	0.8
30	LL2_Roof	38	2	-24.9	0	3.4	0	-4.1	0.8
31	LL2_Roof	39	0	-25.2	0	0.2	0	-6.2	0.8
32	LL2_Roof	39	1	-25.2	0	0.2	0	-6	0.8
33	LL2_Roof	39	2	-25.2	0	0.2	0	-5.8	0.8
34	LL2_Roof	40	0	-25.2	0	0.2	0	-5.8	0.8
35	LL2_Roof	40	1	-25.2	0	0.2	0	-5.3	0.8
36	LL2_Roof	40	2	-25.2	0	0.2	0	-4.8	0.7
37	LL2_Roof	41	0	-25.2	0	0.2	0	-4.8	0.7
38	LL2_Roof	41	1	-25.2	0	0.2	0	-4.3	0.7
39	LL2_Roof	41	2	-25.2	0	0.2	0	-3.8	0.6
40	LL2_Roof	42	0	-25.2	0	0.2	0	-3.8	0.6
41	LL2_Roof	42	1	-25.2	0	0.2	0	-3.5	0.6
42	LL2_Roof	42	2	-25.2	0	0.2	0	-3.2	0.6
43	LL2_Roof	43	0	-18.8	0	6	0	-4.7	0.6
44	LL2_Roof	43	1	-18.8	0	6	0	-3.8	0.6
45	LL2_Roof	43	2	-18.8	0	6	0	-2.9	0.6
46	LL2_Roof	44	0	-20.1	0	0.3	0	-6.8	0.6
47	LL2_Roof	44	1	-20.1	0	0.3	0	-6.6	0.5
48	LL2_Roof	44	2	-20.1	0	0.3	0	-6.4	0.5
49	LL2_Roof	45	0	-20.1	0	0.3	0	-6.4	0.5
50	LL2_Roof	45	1	-20.1	0	0.3	0	-5.8	0.5
51	LL2_Roof	45	2	-20.1	0	0.3	0	-5.2	0.4
52	LL2_Roof	46	0	-20.1	0	0.3	0	-5.2	0.4
53	LL2_Roof	46	1	-20.1	0	0.3	0	-4.5	0.4
54	LL2_Roof	46	2	-20.1	0	0.3	0	-3.9	0.4
55	LL2_Roof	47	0	-20.1	0	0.3	0	-3.9	0.4
56	LL2_Roof	47	1	-20.1	0	0.3	0	-3.5	0.3
57	LL2_Roof	47	2	-20.1	0	0.3	0	-3.1	0.3
58	LL2_Roof	48	0	-11.1	0	7.8	0	-5.4	0.3
59	LL2_Roof	48	1	-11.1	0	7.8	0	-4.2	0.3
60	LL2_Roof	48	2	-11.1	0	7.8	0	-3.1	0.3
61	LL2_Roof	49	0	-13.5	0	0.4	0	-8.4	0.3
62	LL2_Roof	49	1	-13.5	0	0.4	0	-8	0.3
63	LL2_Roof	49	2	-13.5	0	0.4	0	-7.7	0.3
64	LL2_Roof	50	0	-13.5	0	0.4	0	-7.7	0.3
65	LL2_Roof	50	1	-13.5	0	0.4	0	-6.8	0.2
66	LL2_Roof	50	2	-13.5	0	0.4	0	-5.9	0.2
67	LL2_Roof	51	0	-13.5	0	0.4	0	-5.9	0.2
68	LL2_Roof	51	1	-13.5	0	0.4	0	-5	0.1
69	LL2_Roof	51	2	-13.5	0	0.4	0	-4.1	0.1
70	LL2_Roof	52	0	-13.5	0	0.4	0	-4.1	0.1
71	LL2_Roof	52	1	-13.5	0	0.4	0	-3.4	0.1
72	LL2_Roof	52	2	-13.5	0	0.4	0	-2.7	0

Load (Row) Number	User's Load ID	Member ID	Joint ID	Fx (kips)	Fy (kips)	Fz (kips)	Mx (ft*kip)	My (ft*kip)	Mz (ft*kip)
1	LL3_Deck	29	0	32.6	0.2	53.9	0.1	-324.1	-15.9
2	LL3_Deck	29	1	32.7	0.2	48.4	0.1	-220.5	-15.6
3	LL3_Deck	29	2	32.7	0.2	43	0.1	-127.9	-15.3
4	LL3_Deck	30	0	32.7	0.2	43	0.1	-127.9	-15.3
5	LL3_Deck	30	1	32.9	0.2	21.8	0.1	126.1	-14
6	LL3_Deck	30	2	33.1	0.2	0.6	0.1	214.1	-12.7
7	LL3_Deck	31	0	33.1	0.2	0.6	0.1	214.1	-12.7
8	LL3_Deck	31	1	33.4	0.2	-20.5	0.1	136.1	-11.4
9	LL3_Deck	31	2	33.6	0.2	-41.7	0.1	-107.8	-10.1
10	LL3_Deck	32	0	33.6	0.2	-41.7	0.1	-107.8	-10.1
11	LL3_Deck	32	1	33.6	0.2	-44.8	0.1	-157.5	-9.9
12	LL3_Deck	32	2	33.6	0.2	-47.9	0.1	-210.8	-9.8
13	LL3_Deck	33	0	80.7	0.2	13.7	0.1	-196.1	-9.8
14	LL3_Deck	33	1	80.7	0.2	13.2	0.1	-194	-9.7
15	LL3_Deck	33	2	80.7	0.2	12.8	0.1	-192.1	-9.7
16	LL3_Deck	34	0	80.5	0.2	32.6	0.1	-181.6	-9.7
17	LL3_Deck	34	1	80.5	0.2	30.4	0.1	-155.6	-9.6
18	LL3_Deck	34	2	80.6	0.2	28.2	0.1	-131.4	-9.4
19	LL3_Deck	35	0	80.6	0.2	28.2	0.1	-131.4	-9.4
20	LL3_Deck	35	1	80.6	0.2	21.3	0.1	-68.3	-9
21	LL3_Deck	35	2	80.7	0.2	14.4	0.1	-22.8	-8.6
22	LL3_Deck	36	0	80.7	0.2	14.4	0.1	-22.8	-8.6
23	LL3_Deck	36	1	80.8	0.2	7.5	0.1	5.3	-8.2
24	LL3_Deck	36	2	80.8	0.2	0.6	0.1	15.7	-7.8
25	LL3_Deck	37	0	80.8	0.2	0.6	0.1	15.7	-7.8
26	LL3_Deck	37	1	80.9	0.2	-2.9	0.1	14.1	-7.5
27	LL3_Deck	37	2	80.9	0.2	-6.5	0.1	7.9	-7.3
28	LL3_Deck	38	0	84.8	0.2	-2.9	0.1	5.6	-7.3
29	LL3_Deck	38	1	84.8	0.2	-3.3	0.1	5.2	-7.3
30	LL3_Deck	38	2	84.8	0.2	-3.7	0.1	4.6	-7.3
31	LL3_Deck	39	0	88.8	0.2	17.7	0.1	5	-7.3
32	LL3_Deck	39	1	88.8	0.2	15.6	0.1	18	-7.1
33	LL3_Deck	39	2	88.8	0.2	13.5	0.1	29.3	-7
34	LL3_Deck	40	0	88.8	0.2	13.5	0.1	29.3	-7
35	LL3_Deck	40	1	88.9	0.2	7.2	0.1	53.3	-6.6
36	LL3_Deck	40	2	88.9	0.2	0.9	0.1	62.7	-6.2
37	LL3_Deck	41	0	88.9	0.2	0.9	0.1	62.7	-6.2
38	LL3_Deck	41	1	89	0.2	-5.3	0.1	57.6	-5.9
39	LL3_Deck	41	2	89.1	0.2	-11.6	0.1	37.9	-5.5
40	LL3_Deck	42	0	89.1	0.2	-11.6	0.1	37.9	-5.5
41	LL3_Deck	42	1	89.1	0.2	-15.5	0.1	18.4	-5.2
42	LL3_Deck	42	2	89.1	0.2	-19.4	0.1	-6.7	-5
43	LL3_Deck	43	0	79.3	0.2	-27.9	0.1	0.7	-5
44	LL3_Deck	43	1	79.3	0.2	-28.3	0.1	-3.5	-5
45	LL3_Deck	43	2	79.3	0.2	-28.7	0.1	-7.8	-4.9
46	LL3_Deck	44	0	92.3	0.2	18.8	0.1	8.6	-4.9
47	LL3_Deck	44	1	92.3	0.2	16.7	0.1	22.3	-4.8
48	LL3_Deck	44	2	92.3	0.2	14.7	0.1	34.4	-4.7
49	LL3_Deck	45	0	92.3	0.2	14.7	0.1	34.4	-4.7
50	LL3_Deck	45	1	92.4	0.2	8.8	0.1	59.8	-4.3
51	LL3_Deck	45	2	92.4	0.2	3	0.1	72.6	-3.9
52	LL3_Deck	46	0	92.4	0.2	3	0.1	72.6	-3.9
53	LL3_Deck	46	1	92.5	0.2	-2.8	0.1	72.8	-3.6
54	LL3_Deck	46	2	92.6	0.2	-8.6	0.1	60.4	-3.2
55	LL3_Deck	47	0	92.6	0.2	-8.6	0.1	60.4	-3.2
56	LL3_Deck	47	1	92.6	0.2	-12.8	0.1	44	-3
57	LL3_Deck	47	2	92.6	0.2	-16.9	0.1	21.2	-2.7
58	LL3_Deck	48	0	52	0.2	-50.3	0.2	36.7	-2.7
59	LL3_Deck	48	1	52	0.2	-50.7	0.2	29.1	-2.7
60	LL3_Deck	48	2	52	0.2	-51.1	0.2	21.5	-2.6
61	LL3_Deck	49	0	69	0.2	-0.7	0.2	54.3	-2.6
62	LL3_Deck	49	1	69	0.2	-2.8	0.2	53	-2.5
63	LL3_Deck	49	2	69	0.2	-4.8	0.2	50	-2.4
64	LL3_Deck	50	0	69	0.2	-4.8	0.2	50	-2.4
65	LL3_Deck	50	1	69.1	0.2	-10.3	0.2	34.6	-2
66	LL3_Deck	50	2	69.1	0.2	-15.8	0.2	7.9	-1.6
67	LL3_Deck	51	0	69.1	0.2	-15.8	0.2	7.9	-1.6
68	LL3_Deck	51	1	69.2	0.2	-21.3	0.2	-29.9	-1.3
69	LL3_Deck	51	2	69.2	0.2	-26.8	0.2	-78.9	-0.9
70	LL3_Deck	52	0	69.2	0.2	-26.8	0.2	-78.9	-0.9
71	LL3_Deck	52	1	69.3	0.2	-31.2	0.2	-125.7	-0.7
72	LL3_Deck	52	2	69.3	0.2	-35.5	0.2	-179.6	-0.4

Load (Row) Number	User's Load ID	Member ID	Joint ID	Fx (kips)	Fy (kips)	Fz (kips)	Mx (ft*kip)	My (ft*kip)	Mz (ft*kip)
1	LL3_Deck Offset	29	0	16.4	12.4	27	-361.7	-162	-326.9
2	LL3_Deck Offset	29	1	16.4	12.4	24.2	-341.2	-110.2	-302
3	LL3_Deck Offset	29	2	16.4	12.4	21.5	-320.7	-63.9	-277
4	LL3_Deck Offset	30	0	16.4	12.4	21.5	-320.7	-63.9	-277
5	LL3_Deck Offset	30	1	16.5	12.4	10.9	-241.3	63	-180.4
6	LL3_Deck Offset	30	2	16.6	12.4	0.3	-161.9	107.1	-83.8
7	LL3_Deck Offset	31	0	16.6	12.4	0.3	-161.9	107.1	-83.8
8	LL3_Deck Offset	31	1	16.7	12.4	-10.3	-82.5	68.1	12.8
9	LL3_Deck Offset	31	2	16.8	12.4	-20.8	-3	-53.9	109.4
10	LL3_Deck Offset	32	0	16.8	12.4	-20.8	-3	-53.9	109.4
11	LL3_Deck Offset	32	1	16.9	12.4	-22.4	8.6	-78.8	123.6
12	LL3_Deck Offset	32	2	16.9	12.4	-24	20.3	-105.4	137.8
13	LL3_Deck Offset	33	0	40.4	9.7	6.8	-20.5	-98	116.8
14	LL3_Deck Offset	33	1	40.4	9.7	6.6	-19	-97	118.2
15	LL3_Deck Offset	33	2	40.4	9.7	6.4	-17.4	-96	119.7
16	LL3_Deck Offset	34	0	40.3	4.9	16.3	-81.1	-90.8	116.5
17	LL3_Deck Offset	34	1	40.3	4.9	15.2	-72.7	-77.8	120.4
18	LL3_Deck Offset	34	2	40.3	4.9	14.1	-64.4	-65.7	124.4
19	LL3_Deck Offset	35	0	40.3	4.9	14.1	-64.4	-65.7	124.4
20	LL3_Deck Offset	35	1	40.4	4.9	10.7	-38.5	-34.2	136.5
21	LL3_Deck Offset	35	2	40.4	4.9	7.2	-12.7	-11.4	148.7
22	LL3_Deck Offset	36	0	40.4	4.9	7.2	-12.7	-11.4	148.7
23	LL3_Deck Offset	36	1	40.4	4.9	3.8	13.2	2.6	160.9
24	LL3_Deck Offset	36	2	40.5	4.9	0.3	39.1	7.8	173.1
25	LL3_Deck Offset	37	0	40.5	4.9	0.3	39.1	7.8	173.1
26	LL3_Deck Offset	37	1	40.5	4.9	-1.5	52.4	7.1	179.3
27	LL3_Deck Offset	37	2	40.5	4.9	-3.3	65.8	4	185.6
28	LL3_Deck Offset	38	0	42.5	3.3	-1.4	36.3	2.8	170.3
29	LL3_Deck Offset	38	1	42.5	3.3	-1.6	37.8	2.6	170.8
30	LL3_Deck Offset	38	2	42.5	3.3	-1.8	39.3	2.3	171.3
31	LL3_Deck Offset	39	0	44.4	-0.7	8.8	-15.6	2.5	162.4
32	LL3_Deck Offset	39	1	44.5	-0.7	7.8	-7.7	9	161.7
33	LL3_Deck Offset	39	2	44.5	-0.7	6.7	0.2	14.7	161.1
34	LL3_Deck Offset	40	0	44.5	-0.7	6.7	0.2	14.7	161.1
35	LL3_Deck Offset	40	1	44.5	-0.7	3.6	23.7	26.6	159.2
36	LL3_Deck Offset	40	2	44.5	-0.7	0.5	47.2	31.4	157.3
37	LL3_Deck Offset	41	0	44.5	-0.7	0.5	47.2	31.4	157.3
38	LL3_Deck Offset	41	1	44.6	-0.7	-2.7	70.8	28.8	155.3
39	LL3_Deck Offset	41	2	44.6	-0.7	-5.8	94.3	19	153.4
40	LL3_Deck Offset	42	0	44.6	-0.7	-5.8	94.3	19	153.4
41	LL3_Deck Offset	42	1	44.6	-0.7	-7.8	108.9	9.2	152.2
42	LL3_Deck Offset	42	2	44.6	-0.7	-9.7	123.5	-3.4	151.1
43	LL3_Deck Offset	43	0	39.7	-1.5	-13.9	104.5	0.3	141.5
44	LL3_Deck Offset	43	1	39.7	-1.5	-14.2	106	-1.8	141.2
45	LL3_Deck Offset	43	2	39.7	-1.5	-14.4	107.6	-3.9	141
46	LL3_Deck Offset	44	0	46.2	-4.3	9.4	69.4	4.3	131.4
47	LL3_Deck Offset	44	1	46.2	-4.3	8.4	77.2	11.2	128
48	LL3_Deck Offset	44	2	46.2	-4.3	7.3	85	17.2	124.6
49	LL3_Deck Offset	45	0	46.2	-4.3	7.3	85	17.2	124.6
50	LL3_Deck Offset	45	1	46.2	-4.3	4.4	106.9	29.9	115.1
51	LL3_Deck Offset	45	2	46.3	-4.3	1.5	128.8	36.3	105.6
52	LL3_Deck Offset	46	0	46.3	-4.3	1.5	128.8	36.3	105.6
53	LL3_Deck Offset	46	1	46.3	-4.3	-1.4	150.6	36.4	96.1
54	LL3_Deck Offset	46	2	46.3	-4.3	-4.3	172.4	30.2	86.6
55	LL3_Deck Offset	47	0	46.3	-4.3	-4.3	172.4	30.2	86.6
56	LL3_Deck Offset	47	1	46.4	-4.3	-6.4	188	22	79.8
57	LL3_Deck Offset	47	2	46.4	-4.3	-8.5	203.5	10.6	73.1
58	LL3_Deck Offset	48	0	26	-4.3	-25.2	197.4	18.4	71
59	LL3_Deck Offset	48	1	26	-4.3	-25.4	198.9	14.6	70.4
60	LL3_Deck Offset	48	2	26	-4.3	-25.6	200.4	10.8	69.7
61	LL3_Deck Offset	49	0	34.5	-5.2	-0.3	188	27.2	65.1
62	LL3_Deck Offset	49	1	34.5	-5.2	-1.4	195.8	26.5	61.1
63	LL3_Deck Offset	49	2	34.5	-5.2	-2.4	203.6	25	57
64	LL3_Deck Offset	50	0	34.5	-5.2	-2.4	203.6	25	57
65	LL3_Deck Offset	50	1	34.6	-5.2	-5.2	224.3	17.3	46.2
66	LL3_Deck Offset	50	2	34.6	-5.2	-7.9	244.9	4	35.4
67	LL3_Deck Offset	51	0	34.6	-5.2	-7.9	244.9	4	35.4
68	LL3_Deck Offset	51	1	34.6	-5.2	-10.7	265.5	-14.9	24.6
69	LL3_Deck Offset	51	2	34.7	-5.2	-13.4	286.1	-39.4	13.8
70	LL3_Deck Offset	52	0	34.7	-5.2	-13.4	286.1	-39.4	13.8
71	LL3_Deck Offset	52	1	34.7	-5.2	-15.6	302.5	-62.9	5.3
72	LL3_Deck Offset	52	2	34.7	-5.2	-17.8	318.8	-89.8	-3.3

Load (Row) Number	User's Load ID	Member ID	Joint ID	Fx (kips)	Fy (kips)	Fz (kips)	Mx (ft*kip)	My (ft*kip)	Mz (ft*kip)
1	LL3_Roof	29	0	9.5	0	0.3	0	-5.7	-1.3
2	LL3_Roof	29	1	9.5	0	0.3	0	-5.1	-1.3
3	LL3_Roof	29	2	9.5	0	0.3	0	-4.5	-1.3
4	LL3_Roof	30	0	9.5	0	0.3	0	-4.5	-1.3
5	LL3_Roof	30	1	9.5	0	0.3	0	-2.1	-1.2
6	LL3_Roof	30	2	9.5	0	0.3	0	0.2	-1.1
7	LL3_Roof	31	0	9.5	0	0.3	0	0.2	-1.1
8	LL3_Roof	31	1	9.5	0	0.3	0	2.5	-1
9	LL3_Roof	31	2	9.5	0	0.3	0	4.8	-0.9
10	LL3_Roof	32	0	9.5	0	0.3	0	4.8	-0.9
11	LL3_Roof	32	1	9.5	0	0.3	0	5.2	-0.8
12	LL3_Roof	32	2	9.5	0	0.3	0	5.5	-0.8
13	LL3_Roof	33	0	11.6	0	3.1	0	5.5	-0.8
14	LL3_Roof	33	1	11.6	0	3.1	0	6	-0.8
15	LL3_Roof	33	2	11.6	0	3.1	0	6.5	-0.8
16	LL3_Roof	34	0	11.8	0	-0.1	0	4.4	-0.8
17	LL3_Roof	34	1	11.8	0	-0.1	0	4.3	-0.8
18	LL3_Roof	34	2	11.8	0	-0.1	0	4.2	-0.8
19	LL3_Roof	35	0	11.8	0	-0.1	0	4.2	-0.8
20	LL3_Roof	35	1	11.8	0	-0.1	0	3.9	-0.8
21	LL3_Roof	35	2	11.8	0	-0.1	0	3.7	-0.7
22	LL3_Roof	36	0	11.8	0	-0.1	0	3.7	-0.7
23	LL3_Roof	36	1	11.8	0	-0.1	0	3.4	-0.7
24	LL3_Roof	36	2	11.8	0	-0.1	0	3.2	-0.7
25	LL3_Roof	37	0	11.8	0	-0.1	0	3.2	-0.7
26	LL3_Roof	37	1	11.8	0	-0.1	0	3	-0.6
27	LL3_Roof	37	2	11.8	0	-0.1	0	2.9	-0.6
28	LL3_Roof	38	0	14	0	2	0	2.4	-0.6
29	LL3_Roof	38	1	14	0	2	0	2.7	-0.6
30	LL3_Roof	38	2	14	0	2	0	3.1	-0.6
31	LL3_Roof	39	0	13.7	0	0.1	0	2.4	-0.6
32	LL3_Roof	39	1	13.7	0	0.1	0	2.5	-0.6
33	LL3_Roof	39	2	13.7	0	0.1	0	2.5	-0.6
34	LL3_Roof	40	0	13.7	0	0.1	0	2.5	-0.6
35	LL3_Roof	40	1	13.7	0	0.1	0	2.7	-0.6
36	LL3_Roof	40	2	13.7	0	0.1	0	2.8	-0.5
37	LL3_Roof	41	0	13.7	0	0.1	0	2.8	-0.5
38	LL3_Roof	41	1	13.7	0	0.1	0	3	-0.5
39	LL3_Roof	41	2	13.7	0	0.1	0	3.2	-0.5
40	LL3_Roof	42	0	13.7	0	0.1	0	3.2	-0.5
41	LL3_Roof	42	1	13.7	0	0.1	0	3.3	-0.4
42	LL3_Roof	42	2	13.7	0	0.1	0	3.4	-0.4
43	LL3_Roof	43	0	13.2	0	-0.3	0	3.4	-0.4
44	LL3_Roof	43	1	13.2	0	-0.3	0	3.4	-0.4
45	LL3_Roof	43	2	13.2	0	-0.3	0	3.3	-0.4
46	LL3_Roof	44	0	13.4	0	0.3	0	4	-0.4
47	LL3_Roof	44	1	13.4	0	0.3	0	4.2	-0.4
48	LL3_Roof	44	2	13.4	0	0.3	0	4.5	-0.4
49	LL3_Roof	45	0	13.4	0	0.3	0	4.5	-0.4
50	LL3_Roof	45	1	13.4	0	0.3	0	5.2	-0.4
51	LL3_Roof	45	2	13.4	0	0.3	0	5.9	-0.3
52	LL3_Roof	46	0	13.4	0	0.3	0	5.9	-0.3
53	LL3_Roof	46	1	13.4	0	0.3	0	6.6	-0.3
54	LL3_Roof	46	2	13.4	0	0.3	0	7.3	-0.3
55	LL3_Roof	47	0	13.4	0	0.3	0	7.3	-0.3
56	LL3_Roof	47	1	13.4	0	0.3	0	7.8	-0.2
57	LL3_Roof	47	2	13.4	0	0.3	0	8.3	-0.2
58	LL3_Roof	48	0	10.2	0	-2.2	0	9.6	-0.2
59	LL3_Roof	48	1	10.2	0	-2.2	0	9.2	-0.2
60	LL3_Roof	48	2	10.2	0	-2.2	0	8.9	-0.2
61	LL3_Roof	49	0	10.7	0	-0.6	0	10.6	-0.2
62	LL3_Roof	49	1	10.7	0	-0.6	0	10.1	-0.2
63	LL3_Roof	49	2	10.7	0	-0.6	0	9.6	-0.2
64	LL3_Roof	50	0	10.7	0	-0.6	0	9.6	-0.2
65	LL3_Roof	50	1	10.7	0	-0.6	0	8.3	-0.2
66	LL3_Roof	50	2	10.7	0	-0.6	0	7	-0.1
67	LL3_Roof	51	0	10.7	0	-0.6	0	7	-0.1
68	LL3_Roof	51	1	10.7	0	-0.6	0	5.7	-0.1
69	LL3_Roof	51	2	10.7	0	-0.6	0	4.3	-0.1
70	LL3_Roof	52	0	10.7	0	-0.6	0	4.3	-0.1
71	LL3_Roof	52	1	10.7	0	-0.6	0	3.3	-0.1
72	LL3_Roof	52	2	10.7	0	-0.6	0	2.3	0

Load (Row) Number	User's Load ID	Member ID	Joint ID	Fx (kips)	Fy (kips)	Fz (kips)	Mx (ft*kip)	My (ft*kip)	Mz (ft*kip)
1	TU-	29	0	-148.7	-0.1	-6.4	0	130.1	9.9
2	TU-	29	1	-148.7	-0.1	-6.4	0	117.1	9.7
3	TU-	29	2	-148.7	-0.1	-6.4	0	104	9.5
4	TU-	30	0	-148.7	-0.1	-6.4	0	104	9.5
5	TU-	30	1	-148.7	-0.1	-6.4	0	53.5	8.7
6	TU-	30	2	-148.7	-0.1	-6.4	0	2.9	7.8
7	TU-	31	0	-148.7	-0.1	-6.4	0	2.9	7.8
8	TU-	31	1	-148.7	-0.1	-6.4	0	-47.6	7
9	TU-	31	2	-148.7	-0.1	-6.4	0	-98.1	6.2
10	TU-	32	0	-148.7	-0.1	-6.4	0	-98.1	6.2
11	TU-	32	1	-148.7	-0.1	-6.4	0	-105.5	6.1
12	TU-	32	2	-148.7	-0.1	-6.4	0	-113	5.9
13	TU-	33	0	-192.8	-0.1	-60.2	0	-95.8	5.9
14	TU-	33	1	-192.8	-0.1	-60.2	0	-104.9	5.9
15	TU-	33	2	-192.8	-0.1	-60.2	0	-113.9	5.9
16	TU-	34	0	-194.5	-0.1	3.2	0	-86.2	5.9
17	TU-	34	1	-194.5	-0.1	3.2	0	-83.6	5.8
18	TU-	34	2	-194.5	-0.1	3.2	0	-80.9	5.7
19	TU-	35	0	-194.5	-0.1	3.2	0	-80.9	5.7
20	TU-	35	1	-194.5	-0.1	3.2	0	-72.8	5.5
21	TU-	35	2	-194.5	-0.1	3.2	0	-64.7	5.2
22	TU-	36	0	-194.5	-0.1	3.2	0	-64.7	5.2
23	TU-	36	1	-194.5	-0.1	3.2	0	-56.6	4.9
24	TU-	36	2	-194.5	-0.1	3.2	0	-48.4	4.6
25	TU-	37	0	-194.5	-0.1	3.2	0	-48.4	4.6
26	TU-	37	1	-194.5	-0.1	3.2	0	-44.2	4.5
27	TU-	37	2	-194.5	-0.1	3.2	0	-40	4.4
28	TU-	38	0	-218.2	-0.1	-21	0	-37	4.4
29	TU-	38	1	-218.2	-0.1	-21	0	-40.1	4.3
30	TU-	38	2	-218.2	-0.1	-21	0	-43.3	4.3
31	TU-	39	0	-214.9	-0.1	-1.5	0	-39.3	4.3
32	TU-	39	1	-214.9	-0.1	-1.5	0	-40.5	4.2
33	TU-	39	2	-214.9	-0.1	-1.5	0	-41.6	4.2
34	TU-	40	0	-214.9	-0.1	-1.5	0	-41.6	4.2
35	TU-	40	1	-214.9	-0.1	-1.5	0	-45.1	3.9
36	TU-	40	2	-214.9	-0.1	-1.5	0	-48.5	3.7
37	TU-	41	0	-214.9	-0.1	-1.5	0	-48.5	3.7
38	TU-	41	1	-214.9	-0.1	-1.5	0	-52	3.4
39	TU-	41	2	-214.9	-0.1	-1.5	0	-55.5	3.2
40	TU-	42	0	-214.9	-0.1	-1.5	0	-55.5	3.2
41	TU-	42	1	-214.9	-0.1	-1.5	0	-57.6	3
42	TU-	42	2	-214.9	-0.1	-1.5	0	-59.8	2.9
43	TU-	43	0	-197.1	-0.1	14.7	-0.1	-64.7	2.9
44	TU-	43	1	-197.1	-0.1	14.7	-0.1	-62.5	2.9
45	TU-	43	2	-197.1	-0.1	14.7	-0.1	-60.3	2.8
46	TU-	44	0	-199.8	-0.1	-1.3	-0.1	-77.9	2.8
47	TU-	44	1	-199.8	-0.1	-1.3	-0.1	-78.9	2.8
48	TU-	44	2	-199.8	-0.1	-1.3	-0.1	-79.9	2.7
49	TU-	45	0	-199.8	-0.1	-1.3	-0.1	-79.9	2.7
50	TU-	45	1	-199.8	-0.1	-1.3	-0.1	-82.6	2.4
51	TU-	45	2	-199.8	-0.1	-1.3	-0.1	-85.4	2.2
52	TU-	46	0	-199.8	-0.1	-1.3	-0.1	-85.4	2.2
53	TU-	46	1	-199.8	-0.1	-1.3	-0.1	-88.2	2
54	TU-	46	2	-199.8	-0.1	-1.3	-0.1	-90.9	1.7
55	TU-	47	0	-199.8	-0.1	-1.3	-0.1	-90.9	1.7
56	TU-	47	1	-199.8	-0.1	-1.3	-0.1	-92.9	1.6
57	TU-	47	2	-199.8	-0.1	-1.3	-0.1	-94.9	1.4
58	TU-	48	0	-131.4	-0.1	55.6	-0.1	-114.5	1.4
59	TU-	48	1	-131.4	-0.1	55.6	-0.1	-106.2	1.4
60	TU-	48	2	-131.4	-0.1	55.6	-0.1	-97.8	1.4
61	TU-	49	0	-144.5	-0.1	9.7	-0.1	-145.4	1.4
62	TU-	49	1	-144.5	-0.1	9.7	-0.1	-137.9	1.3
63	TU-	49	2	-144.5	-0.1	9.7	-0.1	-130.5	1.2
64	TU-	50	0	-144.5	-0.1	9.7	-0.1	-130.5	1.2
65	TU-	50	1	-144.5	-0.1	9.7	-0.1	-110.8	1
66	TU-	50	2	-144.5	-0.1	9.7	-0.1	-91.2	0.8
67	TU-	51	0	-144.5	-0.1	9.7	-0.1	-91.2	0.8
68	TU-	51	1	-144.5	-0.1	9.7	-0.1	-71.5	0.5
69	TU-	51	2	-144.5	-0.1	9.7	-0.1	-51.8	0.3
70	TU-	52	0	-144.5	-0.1	9.7	-0.1	-51.8	0.3
71	TU-	52	1	-144.5	-0.1	9.7	-0.1	-36.2	0.1
72	TU-	52	2	-144.5	-0.1	9.7	-0.1	-20.6	0

Load (Row) Number	User's Load ID	Member ID	Joint ID	Fx (kips)	Fy (kips)	Fz (kips)	Mx (ft*kip)	My (ft*kip)	Mz (ft*kip)
1	TU+	29	0	148.7	0.1	6.4	0	-130.1	-9.9
2	TU+	29	1	148.7	0.1	6.4	0	-117.1	-9.7
3	TU+	29	2	148.7	0.1	6.4	0	-104	-9.5
4	TU+	30	0	148.7	0.1	6.4	0	-104	-9.5
5	TU+	30	1	148.7	0.1	6.4	0	-53.5	-8.7
6	TU+	30	2	148.7	0.1	6.4	0	-2.9	-7.8
7	TU+	31	0	148.7	0.1	6.4	0	-2.9	-7.8
8	TU+	31	1	148.7	0.1	6.4	0	47.6	-7
9	TU+	31	2	148.7	0.1	6.4	0	98.1	-6.2
10	TU+	32	0	148.7	0.1	6.4	0	98.1	-6.2
11	TU+	32	1	148.7	0.1	6.4	0	105.5	-6.1
12	TU+	32	2	148.7	0.1	6.4	0	113	-5.9
13	TU+	33	0	192.8	0.1	60.2	0	95.8	-5.9
14	TU+	33	1	192.8	0.1	60.2	0	104.9	-5.9
15	TU+	33	2	192.8	0.1	60.2	0	113.9	-5.9
16	TU+	34	0	194.5	0.1	-3.2	0	86.2	-5.9
17	TU+	34	1	194.5	0.1	-3.2	0	83.6	-5.8
18	TU+	34	2	194.5	0.1	-3.2	0	80.9	-5.7
19	TU+	35	0	194.5	0.1	-3.2	0	80.9	-5.7
20	TU+	35	1	194.5	0.1	-3.2	0	72.8	-5.5
21	TU+	35	2	194.5	0.1	-3.2	0	64.7	-5.2
22	TU+	36	0	194.5	0.1	-3.2	0	64.7	-5.2
23	TU+	36	1	194.5	0.1	-3.2	0	56.6	-4.9
24	TU+	36	2	194.5	0.1	-3.2	0	48.4	-4.6
25	TU+	37	0	194.5	0.1	-3.2	0	48.4	-4.6
26	TU+	37	1	194.5	0.1	-3.2	0	44.2	-4.5
27	TU+	37	2	194.5	0.1	-3.2	0	40	-4.4
28	TU+	38	0	218.2	0.1	21	0	37	-4.4
29	TU+	38	1	218.2	0.1	21	0	40.1	-4.3
30	TU+	38	2	218.2	0.1	21	0	43.3	-4.3
31	TU+	39	0	214.9	0.1	1.5	0	39.3	-4.3
32	TU+	39	1	214.9	0.1	1.5	0	40.5	-4.2
33	TU+	39	2	214.9	0.1	1.5	0	41.6	-4.2
34	TU+	40	0	214.9	0.1	1.5	0	41.6	-4.2
35	TU+	40	1	214.9	0.1	1.5	0	45.1	-3.9
36	TU+	40	2	214.9	0.1	1.5	0	48.5	-3.7
37	TU+	41	0	214.9	0.1	1.5	0	48.5	-3.7
38	TU+	41	1	214.9	0.1	1.5	0	52	-3.4
39	TU+	41	2	214.9	0.1	1.5	0	55.5	-3.2
40	TU+	42	0	214.9	0.1	1.5	0	55.5	-3.2
41	TU+	42	1	214.9	0.1	1.5	0	57.6	-3
42	TU+	42	2	214.9	0.1	1.5	0	59.8	-2.9
43	TU+	43	0	197.1	0.1	-14.7	0.1	64.7	-2.9
44	TU+	43	1	197.1	0.1	-14.7	0.1	62.5	-2.9
45	TU+	43	2	197.1	0.1	-14.7	0.1	60.3	-2.8
46	TU+	44	0	199.8	0.1	1.3	0.1	77.9	-2.8
47	TU+	44	1	199.8	0.1	1.3	0.1	78.9	-2.8
48	TU+	44	2	199.8	0.1	1.3	0.1	79.9	-2.7
49	TU+	45	0	199.8	0.1	1.3	0.1	79.9	-2.7
50	TU+	45	1	199.8	0.1	1.3	0.1	82.6	-2.4
51	TU+	45	2	199.8	0.1	1.3	0.1	85.4	-2.2
52	TU+	46	0	199.8	0.1	1.3	0.1	85.4	-2.2
53	TU+	46	1	199.8	0.1	1.3	0.1	88.2	-2
54	TU+	46	2	199.8	0.1	1.3	0.1	90.9	-1.7
55	TU+	47	0	199.8	0.1	1.3	0.1	90.9	-1.7
56	TU+	47	1	199.8	0.1	1.3	0.1	92.9	-1.6
57	TU+	47	2	199.8	0.1	1.3	0.1	94.9	-1.4
58	TU+	48	0	131.4	0.1	-55.6	0.1	114.5	-1.4
59	TU+	48	1	131.4	0.1	-55.6	0.1	106.2	-1.4
60	TU+	48	2	131.4	0.1	-55.6	0.1	97.8	-1.4
61	TU+	49	0	144.5	0.1	-9.7	0.1	145.4	-1.4
62	TU+	49	1	144.5	0.1	-9.7	0.1	137.9	-1.3
63	TU+	49	2	144.5	0.1	-9.7	0.1	130.5	-1.2
64	TU+	50	0	144.5	0.1	-9.7	0.1	130.5	-1.2
65	TU+	50	1	144.5	0.1	-9.7	0.1	110.8	-1
66	TU+	50	2	144.5	0.1	-9.7	0.1	91.2	-0.8
67	TU+	51	0	144.5	0.1	-9.7	0.1	91.2	-0.8
68	TU+	51	1	144.5	0.1	-9.7	0.1	71.5	-0.5
69	TU+	51	2	144.5	0.1	-9.7	0.1	51.8	-0.3
70	TU+	52	0	144.5	0.1	-9.7	0.1	51.8	-0.3
71	TU+	52	1	144.5	0.1	-9.7	0.1	36.2	-0.1
72	TU+	52	2	144.5	0.1	-9.7	0.1	20.6	0

Load (Row) Number	User's Load ID	Member ID	Joint ID	Fx (kips)	Fy (kips)	Fz (kips)	Mx (ft*kip)	My (ft*kip)	Mz (ft*kip)
1	TU+Temp. Diff.	29	0	266.8	0.2	9.9	0.1	-210.5	-20.1
2	TU+Temp. Diff.	29	1	266.8	0.2	9.9	0.1	-190.4	-19.7
3	TU+Temp. Diff.	29	2	266.8	0.2	9.9	0.1	-170.4	-19.2
4	TU+Temp. Diff.	30	0	266.8	0.2	9.9	0.1	-170.4	-19.2
5	TU+Temp. Diff.	30	1	266.8	0.2	9.9	0.1	-92.6	-17.6
6	TU+Temp. Diff.	30	2	266.8	0.2	9.9	0.1	-14.9	-15.9
7	TU+Temp. Diff.	31	0	266.8	0.2	9.9	0.1	-14.9	-15.9
8	TU+Temp. Diff.	31	1	266.8	0.2	9.9	0.1	62.8	-14.2
9	TU+Temp. Diff.	31	2	266.8	0.2	9.9	0.1	140.5	-12.5
10	TU+Temp. Diff.	32	0	266.8	0.2	9.9	0.1	140.5	-12.5
11	TU+Temp. Diff.	32	1	266.8	0.2	9.9	0.1	151.9	-12.3
12	TU+Temp. Diff.	32	2	266.8	0.2	9.9	0.1	163.3	-12.1
13	TU+Temp. Diff.	33	0	358.7	0.2	121.8	0.1	129.5	-12.1
14	TU+Temp. Diff.	33	1	358.7	0.2	121.8	0.1	147.7	-12
15	TU+Temp. Diff.	33	2	358.7	0.2	121.8	0.1	166	-12
16	TU+Temp. Diff.	34	0	361.9	0.2	-2.8	0.1	113.8	-12
17	TU+Temp. Diff.	34	1	361.9	0.2	-2.8	0.1	111.5	-11.8
18	TU+Temp. Diff.	34	2	361.9	0.2	-2.8	0.1	109.3	-11.6
19	TU+Temp. Diff.	35	0	361.9	0.2	-2.8	0.1	109.3	-11.6
20	TU+Temp. Diff.	35	1	361.9	0.2	-2.8	0.1	102.2	-11.1
21	TU+Temp. Diff.	35	2	361.9	0.2	-2.8	0.1	95.2	-10.6
22	TU+Temp. Diff.	36	0	361.9	0.2	-2.8	0.1	95.2	-10.6
23	TU+Temp. Diff.	36	1	361.9	0.2	-2.8	0.1	88.1	-10
24	TU+Temp. Diff.	36	2	361.9	0.2	-2.8	0.1	81.1	-9.5
25	TU+Temp. Diff.	37	0	361.9	0.2	-2.8	0.1	81.1	-9.5
26	TU+Temp. Diff.	37	1	361.9	0.2	-2.8	0.1	77.5	-9.2
27	TU+Temp. Diff.	37	2	361.9	0.2	-2.8	0.1	73.8	-8.9
28	TU+Temp. Diff.	38	0	422.6	0.2	59.2	0.1	63.9	-8.9
29	TU+Temp. Diff.	38	1	422.6	0.2	59.2	0.1	72.8	-8.9
30	TU+Temp. Diff.	38	2	422.6	0.2	59.2	0.1	81.7	-8.9
31	TU+Temp. Diff.	39	0	413.9	0.2	4.2	0.1	64.9	-8.9
32	TU+Temp. Diff.	39	1	413.9	0.2	4.2	0.1	68.2	-8.7
33	TU+Temp. Diff.	39	2	413.9	0.2	4.2	0.1	71.4	-8.5
34	TU+Temp. Diff.	40	0	413.9	0.2	4.2	0.1	71.4	-8.5
35	TU+Temp. Diff.	40	1	413.9	0.2	4.2	0.1	81.2	-8
36	TU+Temp. Diff.	40	2	413.9	0.2	4.2	0.1	90.9	-7.6
37	TU+Temp. Diff.	41	0	413.9	0.2	4.2	0.1	90.9	-7.6
38	TU+Temp. Diff.	41	1	413.9	0.2	4.2	0.1	100.7	-7.1
39	TU+Temp. Diff.	41	2	413.9	0.2	4.2	0.1	110.4	-6.6
40	TU+Temp. Diff.	42	0	413.9	0.2	4.2	0.1	110.4	-6.6
41	TU+Temp. Diff.	42	1	413.9	0.2	4.2	0.1	116.5	-6.3
42	TU+Temp. Diff.	42	2	413.9	0.2	4.2	0.1	122.5	-6
43	TU+Temp. Diff.	43	0	398.7	0.2	-9.9	0.1	127.9	-6
44	TU+Temp. Diff.	43	1	398.7	0.2	-9.9	0.1	126.4	-5.9
45	TU+Temp. Diff.	43	2	398.7	0.2	-9.9	0.1	124.9	-5.9
46	TU+Temp. Diff.	44	0	399.6	0.2	4.1	0.1	150.5	-5.9
47	TU+Temp. Diff.	44	1	399.6	0.2	4.1	0.1	153.7	-5.7
48	TU+Temp. Diff.	44	2	399.6	0.2	4.1	0.1	156.9	-5.6
49	TU+Temp. Diff.	45	0	399.6	0.2	4.1	0.1	156.9	-5.6
50	TU+Temp. Diff.	45	1	399.6	0.2	4.1	0.1	165.8	-5.1
51	TU+Temp. Diff.	45	2	399.6	0.2	4.1	0.1	174.6	-4.6
52	TU+Temp. Diff.	46	0	399.6	0.2	4.1	0.1	174.6	-4.6
53	TU+Temp. Diff.	46	1	399.6	0.2	4.1	0.1	183.5	-4.2
54	TU+Temp. Diff.	46	2	399.6	0.2	4.1	0.1	192.4	-3.7
55	TU+Temp. Diff.	47	0	399.6	0.2	4.1	0.1	192.4	-3.7
56	TU+Temp. Diff.	47	1	399.6	0.2	4.1	0.1	198.7	-3.4
57	TU+Temp. Diff.	47	2	399.6	0.2	4.1	0.1	205	-3.1
58	TU+Temp. Diff.	48	0	277.3	0.2	-97.5	0.1	241	-3.1
59	TU+Temp. Diff.	48	1	277.3	0.2	-97.5	0.1	226.4	-3
60	TU+Temp. Diff.	48	2	277.3	0.2	-97.5	0.1	211.7	-3
61	TU+Temp. Diff.	49	0	299.3	0.2	-18	0.2	301.1	-3
62	TU+Temp. Diff.	49	1	299.3	0.2	-18	0.2	287.3	-2.8
63	TU+Temp. Diff.	49	2	299.3	0.2	-18	0.2	273.4	-2.6
64	TU+Temp. Diff.	50	0	299.3	0.2	-18	0.2	273.4	-2.6
65	TU+Temp. Diff.	50	1	299.3	0.2	-18	0.2	236.9	-2.2
66	TU+Temp. Diff.	50	2	299.3	0.2	-18	0.2	200.3	-1.8
67	TU+Temp. Diff.	51	0	299.3	0.2	-18	0.2	200.3	-1.8
68	TU+Temp. Diff.	51	1	299.3	0.2	-18	0.2	163.7	-1.3
69	TU+Temp. Diff.	51	2	299.3	0.2	-18	0.2	127.2	-0.9
70	TU+Temp. Diff.	52	0	299.3	0.2	-18	0.2	127.2	-0.9
71	TU+Temp. Diff.	52	1	299.3	0.2	-18	0.2	98.2	-0.5
72	TU+Temp. Diff.	52	2	299.3	0.2	-18	0.2	69.1	-0.2

PT Column: AASHTO LRFD Column Analysis
Figg Bridge Engineers, Inc.
Short Column Analysis - Individual Load Cases
File Name: BS_Deck_STRI_No PT Axial.ptc

Short Column Analysis - Individual Load Case Results

Load No.	Cross Section ID	Pu (kips)	Mux (ft*kip)	Muy (ft*kip)	Mu (ft*kip)	ϕMn (ft*kip)	ϕMn/Mu
1	Deck_BS	-1779.3	364.5	-36.3	366.3	3363.4	9.182
2	Deck_BS	-844.8	-1932.2	-1616.5	2519.2	4171.4	1.656
3	Deck_BS	-655.9	-2283.7	-109.9	2286.3	3333.6	1.458
4	Deck_BS	-1395.7	-639.3	-8.3	639.4	2850.7	4.459
5	Deck_BS	-457.1	1253.9	-75.5	1256.2	3773.0	3.004
6	Deck_BS	-567.9	117.3	305.3	327.1	8097.7	24.759
7	Deck_BS	-655.9	-2283.7	-109.9	2286.3	3333.6	1.458
8	Deck_BS	-844.8	-1932.2	-1616.5	2519.2	4171.4	1.656
9	Deck_BS	-410.5	-1981.9	-1605.1	2550.3	4448.0	1.744
10	Deck_BS	168.0	-1149.8	-15.3	1149.9	3805.2	3.309
11	Deck_BS	-578.3	304.0	106.6	322.1	3921.9	12.174
12	Deck_BS	-1349.0	721.6	-19.9	721.9	3504.2	4.854
13	Deck_BS	-419.8	-1829.8	-639.2	1938.2	3668.6	1.893
14	Deck_BS	-655.9	-2283.7	-109.9	2286.3	3333.6	1.458
15	Deck_BS	-844.8	-1932.2	-1616.5	2519.2	4171.4	1.656
16	Deck_BS	-755.5	-0.2	-22.2	22.2	59311.0	2671.557
17	Deck_BS	-307.6	-523.0	-0.8	523.0	3532.7	6.755
18	Deck_BS	-311.0	1.1	-1.9	2.2	6111.0	2783.487

MIN C/D = 1.46

Section ID: Deck_BS

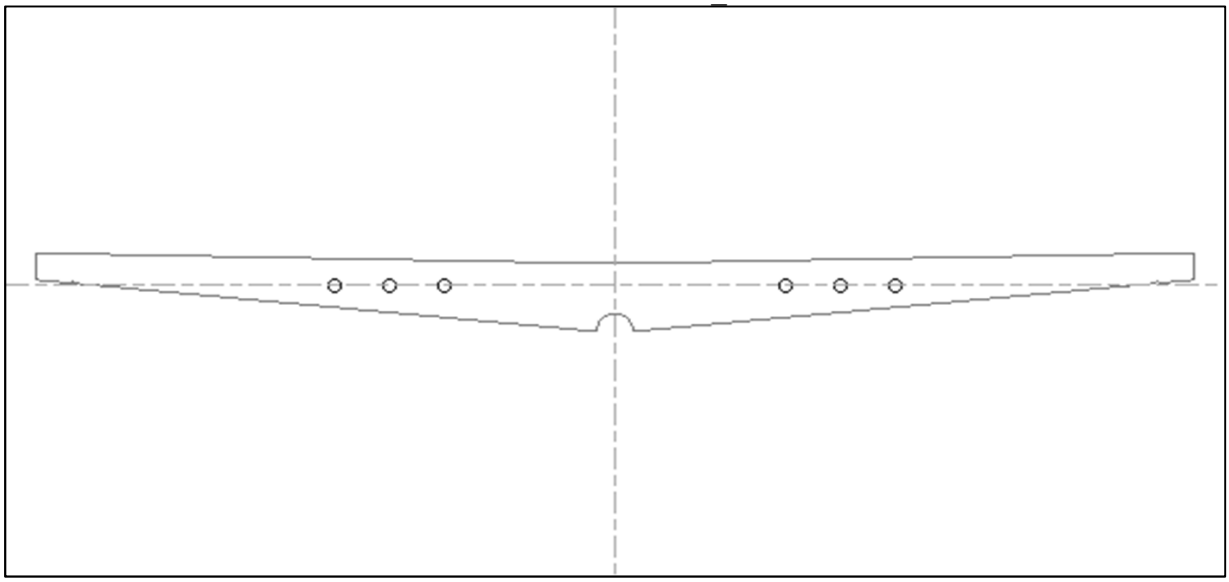

Material Properties

f'c (ksi)	8.5	Strain @ Ult.	0.003
f''c (ksi)	7.12	Strain @ Max.	0.0024
fy (ksi)	60	E Conc. (ksi)	4781
fr (ksi)	0.7	E Rebar (ksi)	29000
Tendon fpu (ksi)	270	E Tendon (ksi)	28500
PT Bar fpu (ksi)	150	E PT Bar (ksi)	29000
Gamma	0.15		

Section Properties

Ix (in^4)	257511	Iy (in^4)	62104874
Y top (in)	11.1529	X lft (in)	190
Y bot (in)	16.7676	X rgt (in)	190
Area (in^2)	6576.95	Ixy (in^4)	0

Cross Section Coordinates

** Exterior Boundary Coordinates **

Point No.	X (in)	Y (in)	Point No.	X (in)	Y (in)
1	-190	11.15	2	-180	11.15
3	-10.5	7.76	4	10.5	7.76
5	180	11.15	6	190	11.15
7	190	1.63	8	178.5	0.46
9	178	0.91	10	177.5	0.36
11	9	-16.77	12	6	-16.77
13	-6	-16.77	14	-9	-16.77
15	-177.5	0.36	16	-178	0.91
17	-178.5	0.46	18	-190	1.63

Tendon Information

Tendon No.	X (in)	Y (in)	Dia. (in)	Area (in^2)	Fsi (ksi)
1	-56	-0.36	4.5	4.12	216
2	-74	-0.36	4.5	4.12	216
3	-92	-0.36	4.5	4.12	216
4	56	-0.36	4.5	4.12	216
5	74	-0.36	4.5	4.12	216
6	92	-0.36	4.5	4.12	216

Canopy - Ultimate Moment Calculations

Sum-It: AASHTO LRFD Load Combination Generator
Figg Bridge Engineers, Inc.
Limit State Summary
File Name: Canopy Loads_Main Span_No PT Axial.sum

AASHTO Limit State: STR 1 - STRENGTH I													
Max/ Min ID	**Load Num**	**Member Num**	**Joint Num**	**Limit State/ Combo ID**	**Fx (kips)**	**Fy (kips)**	**Fz (kips)**	**Mx (ft*kip)**	**My (ft*kip)**	**Mz (ft*kip)**	**Mxy (ft*kip)**	**Mxz (ft*kip)**	**Myz (ft*kip)**
Max Fx	59	126	1	STR 1/ 46	1253.8	0.0	8.1	0.1	246.7	-2.3	246.7	2.3	246.7
Max Fy	58	126	0	STR 1/ 7	569.8	43.6	17.6	-0.6	182.6	511.0	182.6	511.0	542.6
Max Fz	10	106	0	STR 1/ 22	-1859.1	0.0	63.7	0.1	-391.9	-0.1	391.9	0.1	391.9
Max Mx	7	104	0	STR 1/ 7	252.1	-17.2	-50.4	29.1	-86.0	-546.0	90.7	546.8	552.7
Max My	2	102	1	STR 1/ 112	234.2	0.0	-25.9	0.0	786.5	-0.1	786.5	0.1	786.5
Max Mz	66	128	2	STR 1/ 61	484.9	43.6	-43.9	-0.3	-278.0	1555.0	278.0	1555.0	1579.7
Max Mxy	2	102	1	STR 1/ 112	234.2	0.0	-25.9	0.0	786.5	-0.1	786.5	0.1	786.5
Max Mxz	66	128	2	STR 1/ 61	484.9	43.6	-43.9	-0.3	-278.0	1555.0	278.0	1555.0	1579.7
Max Myz	66	128	2	STR 1/ 25	1067.3	43.6	-65.8	-0.2	-443.0	1553.9	443.0	1553.9	1615.8
Min Fx	22	111	0	STR 1/ 20	-3252.4	0.0	22.7	0.1	169.2	0.8	169.2	0.8	169.2
Min Fy	1	102	0	STR 1/ 8	201.2	-17.9	39.9	28.7	527.0	-38.8	527.8	48.3	528.4
Min Fz	9	104	2	STR 1/ 112	157.6	0.0	-78.7	0.0	-443.5	0.1	443.5	0.1	443.5
Min Mx	58	126	0	STR 1/ 63	409.1	3.9	16.4	-6.6	87.2	264.1	87.4	264.2	278.1
Min My	66	128	2	STR 1/ 20	1083.6	0.0	-69.0	0.1	-476.6	1.3	476.6	1.3	476.6
Min Mz	34	116	0	STR 1/ 161	-2496.4	17.7	21.5	9.8	110.1	-1099.4	110.5	1099.4	1104.9
Min Mxy	53	123	1	STR 1/ 58	-819.9	0.0	-27.6	0.1	0.0	-0.8	0.1	0.8	0.8
Min Mxz	5	103	1	STR 1/ 4	258.8	0.0	-36.5	0.0	226.6	0.0	226.6	0.0	226.6
Min Myz	14	107	1	STR 1/ 6	-1572.8	0.0	31.9	0.1	0.0	-0.1	0.1	0.1	0.1

Limit State: STRENGTH I

FR Friction
LF: 1
FR1: CR+SH+PT_EOC
FR2: CR+SH+PT_D10K

TU Uniform Temperature
LF: 0.5
TU1: TU-
TU2: TU+
TU3: TU+Temp. Diff.

DW DL Wearing Surfaces & Utilities
LF1: 1.5
LF2: 0.65
DW1: DW

LL Vehicular Live Load
LF: 1.75
LL1: LL1_Deck
LL2: LL2_Deck
LL3: LL3_Deck
LL4: LL1_Roof
LL5: LL2_Roof
LL6: LL3_Roof
LL7: LL1_Deck Offset
LL8: LL2_Deck Offset
LL9: LL3_Deck Offset

DC DL Structural Components & Attachments
LF1: 1.25
LF2: 0.9
DC1: DC

Load (Row) Number	User's Load ID	Member ID	Joint ID	Fx (kips)	Fy (kips)	Fz (kips)	Mx (ft*kip)	My (ft*kip)	Mz (ft*kip)
1	CR+SH+PT_D10K	102	0	349.5	0	6.8	0	200.8	0
2	CR+SH+PT_D10K	102	1	370.9	0	-34.2	0	240.1	-0.1
3	CR+SH+PT_D10K	102	2	383.9	0	-34.5	0	-18.2	-0.1
4	CR+SH+PT_D10K	103	0	383.9	0	-34.9	0	-18.2	-0.1
5	CR+SH+PT_D10K	103	1	414.6	0	6.3	0	-57.3	-0.1
6	CR+SH+PT_D10K	103	2	419.7	0	6.3	0	-10.8	-0.2
7	CR+SH+PT_D10K	104	0	419.7	0	8.4	0	-10.8	-0.2
8	CR+SH+PT_D10K	104	1	423.9	0	8.4	0	6.3	-0.2
9	CR+SH+PT_D10K	104	2	233.9	0	8.4	0	19.5	-0.2
10	CR+SH+PT_D10K	106	0	368	0	-16.7	0	215.4	-0.2
11	CR+SH+PT_D10K	106	1	592.8	0	-16.5	0	204.6	-0.2
12	CR+SH+PT_D10K	106	2	590.3	0	-16.5	0	188.7	-0.2
13	CR+SH+PT_D10K	107	0	590.3	0	-12.8	0	188.7	-0.2
14	CR+SH+PT_D10K	107	1	588.6	0	-12.8	0	119.8	-0.2
15	CR+SH+PT_D10K	107	2	590.2	0	-12.8	0	50.8	-0.2
16	CR+SH+PT_D10K	108	0	590.2	0	-13.9	0	50.8	-0.2
17	CR+SH+PT_D10K	108	1	591.8	0	-13.9	0	-21.3	-0.1
18	CR+SH+PT_D10K	108	2	595.2	0	-13.9	0	-93.5	-0.1
19	CR+SH+PT_D10K	109	0	595.2	0	-12	0	-93.5	-0.1
20	CR+SH+PT_D10K	109	1	598.3	0	-12	0	-115.3	-0.1
21	CR+SH+PT_D10K	109	2	372.9	0	-11.9	0	-142.2	-0.1
22	CR+SH+PT_D10K	111	0	521.7	0	-11.5	0	113.3	-0.1
23	CR+SH+PT_D10K	111	1	755	0	-11.2	0	108.9	-0.1
24	CR+SH+PT_D10K	111	2	752.9	0	-11.3	0	98.9	-0.1
25	CR+SH+PT_D10K	112	0	752.9	0	-8.1	0	98.9	-0.1
26	CR+SH+PT_D10K	112	1	751.6	0	-8.1	0	53.8	-0.1
27	CR+SH+PT_D10K	112	2	752.3	0	-8.1	0	8.7	-0.1
28	CR+SH+PT_D10K	113	0	752.3	0	-9	0	8.7	-0.1
29	CR+SH+PT_D10K	113	1	753	0	-9	0	-39.5	-0.1
30	CR+SH+PT_D10K	113	2	756.6	0	-9	0	-87.8	-0.1
31	CR+SH+PT_D10K	114	0	756.6	0	-7.3	0	-87.8	-0.1
32	CR+SH+PT_D10K	114	1	759.7	0	-7.3	0	-99.1	-0.1
33	CR+SH+PT_D10K	114	2	526.3	0	-7.1	0	-115.9	-0.1
34	CR+SH+PT_D10K	116	0	653.4	0	-7.2	0	61.2	0
35	CR+SH+PT_D10K	116	1	874	0	-7	0	61.2	0
36	CR+SH+PT_D10K	116	2	871.6	0	-7	0	55.7	0
37	CR+SH+PT_D10K	117	0	871.6	0	-4.3	0	55.7	0
38	CR+SH+PT_D10K	117	1	870	0	-4.3	0	30.9	0
39	CR+SH+PT_D10K	117	2	870.6	0	-4.3	0	6.1	0
40	CR+SH+PT_D10K	118	0	870.6	0	-4.9	0	6.1	0
41	CR+SH+PT_D10K	118	1	871.1	0	-4.9	0	-21.4	0
42	CR+SH+PT_D10K	118	2	875.2	0	-4.9	0	-49	0
43	CR+SH+PT_D10K	119	0	875.2	0	-3.4	0	-49	0
44	CR+SH+PT_D10K	119	1	878.5	0	-3.4	0	-53.1	0
45	CR+SH+PT_D10K	119	2	657.8	0	-3.3	0	-62.7	0
46	CR+SH+PT_D10K	121	0	630.1	0	0.2	0	-0.4	0.1
47	CR+SH+PT_D10K	121	1	817.2	0	0.1	0	4.4	0.1
48	CR+SH+PT_D10K	121	2	815	0	0.1	0	4.7	0.1
49	CR+SH+PT_D10K	122	0	815	0	-1.1	0	4.7	0.1
50	CR+SH+PT_D10K	122	1	812.8	0	-1.1	0	-1.4	0.1
51	CR+SH+PT_D10K	122	2	812.5	0	-1.1	0	-7.4	0.1
52	CR+SH+PT_D10K	123	0	812.5	0	-1.1	0	-7.4	0.1
53	CR+SH+PT_D10K	123	1	812.1	0	-1.1	0	-13.5	0.1
54	CR+SH+PT_D10K	123	2	814.5	0	-1.1	0	-19.6	0
55	CR+SH+PT_D10K	124	0	814.5	0	0.1	0	-19.6	0
56	CR+SH+PT_D10K	124	1	816.7	0	0.1	0	-19.5	0
57	CR+SH+PT_D10K	124	2	653	0	0.2	0	-21	0
58	CR+SH+PT_D10K	126	0	286	0	8.1	0	-88.8	0.1
59	CR+SH+PT_D10K	126	1	401.3	0	8.1	0	-77.6	0
60	CR+SH+PT_D10K	126	2	399.3	0	8.1	0	-66.2	0
61	CR+SH+PT_D10K	127	0	399.3	0	6.6	0	-66.2	0
62	CR+SH+PT_D10K	127	1	396.9	0	6.6	0	-31.2	0
63	CR+SH+PT_D10K	127	2	396.3	0	6.6	0	3.7	-0.1
64	CR+SH+PT_D10K	128	0	396.3	0	6.9	0	3.7	-0.1
65	CR+SH+PT_D10K	128	1	395.6	0	6.9	0	40.6	-0.2
66	CR+SH+PT_D10K	128	2	395.8	0	6.9	0	77.4	-0.2

Load (Row) Number	User's Load ID	Member ID	Joint ID	Fx (kips)	Fy (kips)	Fz (kips)	Mx (ft*kip)	My (ft*kip)	Mz (ft*kip)
1	CR+SH+PT_EOC	102	0	224.3	0	-5.4	0	491.7	0
2	CR+SH+PT_EOC	102	1	241.6	0	-48.6	0	440.1	0
3	CR+SH+PT_EOC	102	2	250.7	0	-48.9	0	74.4	0
4	CR+SH+PT_EOC	103	0	250.7	0	-49.4	0	74.4	0
5	CR+SH+PT_EOC	103	1	269.8	0	-5.9	0	-58.9	0
6	CR+SH+PT_EOC	103	2	272.5	0	-5.9	0	-102	0
7	CR+SH+PT_EOC	104	0	272.5	0	-3.7	0	-102	0
8	CR+SH+PT_EOC	104	1	274.7	0	-3.7	0	-109.5	0
9	CR+SH+PT_EOC	104	2	164	0	-3.7	0	-122.2	0
10	CR+SH+PT_EOC	106	0	265.3	0	-14.7	0	164.6	0
11	CR+SH+PT_EOC	106	1	397.5	0	-14.6	0	157	0
12	CR+SH+PT_EOC	106	2	396.7	0	-14.6	0	142.9	0
13	CR+SH+PT_EOC	107	0	396.7	0	-10.7	0	142.9	0
14	CR+SH+PT_EOC	107	1	396.3	0	-10.7	0	85.5	0
15	CR+SH+PT_EOC	107	2	397.2	0	-10.7	0	28.1	0.1
16	CR+SH+PT_EOC	108	0	397.2	0	-11.8	0	28.1	0.1
17	CR+SH+PT_EOC	108	1	398.1	0	-11.8	0	-33.3	0.1
18	CR+SH+PT_EOC	108	2	399.6	0	-11.8	0	-94.6	0.1
19	CR+SH+PT_EOC	109	0	399.6	0	-9.8	0	-94.6	0.1
20	CR+SH+PT_EOC	109	1	400.7	0	-9.8	0	-112.4	0.1
21	CR+SH+PT_EOC	109	2	268.1	0	-9.7	0	-136.8	0.1
22	CR+SH+PT_EOC	111	0	372	0	-11.1	0	107	0.1
23	CR+SH+PT_EOC	111	1	509.4	0	-11	0	104.3	0.2
24	CR+SH+PT_EOC	111	2	508.9	0	-11	0	94.6	0.2
25	CR+SH+PT_EOC	112	0	508.9	0	-7.6	0	94.6	0.2
26	CR+SH+PT_EOC	112	1	508.8	0	-7.6	0	52.6	0.2
27	CR+SH+PT_EOC	112	2	509.3	0	-7.6	0	10.7	0.2
28	CR+SH+PT_EOC	113	0	509.3	0	-8.5	0	10.7	0.2
29	CR+SH+PT_EOC	113	1	509.7	0	-8.5	0	-34.8	0.2
30	CR+SH+PT_EOC	113	2	511.3	0	-8.5	0	-80.3	0.3
31	CR+SH+PT_EOC	114	0	511.3	0	-6.6	0	-80.3	0.3
32	CR+SH+PT_EOC	114	1	512.5	0	-6.6	0	-90.6	0.3
33	CR+SH+PT_EOC	114	2	374.8	0	-6.5	0	-108	0.3
34	CR+SH+PT_EOC	116	0	441.3	0	-7.1	0	56.9	0.3
35	CR+SH+PT_EOC	116	1	571	0	-7	0	58.3	0.3
36	CR+SH+PT_EOC	116	2	570.2	0	-7	0	52.8	0.3
37	CR+SH+PT_EOC	117	0	570.2	0	-4	0	52.8	0.3
38	CR+SH+PT_EOC	117	1	569.9	0	-4	0	29.9	0.3
39	CR+SH+PT_EOC	117	2	570.3	0	-4	0	7	0.4
40	CR+SH+PT_EOC	118	0	570.3	0	-4.6	0	7	0.4
41	CR+SH+PT_EOC	118	1	570.6	0	-4.6	0	-19.1	0.4
42	CR+SH+PT_EOC	118	2	572.4	0	-4.6	0	-45.2	0.4
43	CR+SH+PT_EOC	119	0	572.5	0	-3	0	-45.2	0.4
44	CR+SH+PT_EOC	119	1	573.8	0	-3	0	-48.7	0.4
45	CR+SH+PT_EOC	119	2	443.9	0	-2.9	0	-59.3	0.4
46	CR+SH+PT_EOC	121	0	412.1	0	0.3	0	3.1	0.5
47	CR+SH+PT_EOC	121	1	519.9	0	0.2	0	9.2	0.5
48	CR+SH+PT_EOC	121	2	519.1	0	0.2	0	9.5	0.5
49	CR+SH+PT_EOC	122	0	519.1	0	-1.2	0	9.5	0.5
50	CR+SH+PT_EOC	122	1	518.3	0	-1.2	0	3.3	0.5
51	CR+SH+PT_EOC	122	2	518.1	0	-1.2	0	-3	0.5
52	CR+SH+PT_EOC	123	0	518.1	0	-1.2	0	-3	0.5
53	CR+SH+PT_EOC	123	1	517.9	0	-1.2	0	-9.3	0.5
54	CR+SH+PT_EOC	123	2	518.8	0	-1.2	0	-15.5	0.5
55	CR+SH+PT_EOC	124	0	518.8	0	0.2	0	-15.5	0.5
56	CR+SH+PT_EOC	124	1	519.6	0	0.2	0	-15.3	0.5
57	CR+SH+PT_EOC	124	2	434.8	0	0.3	0	-18	0.5
58	CR+SH+PT_EOC	126	0	203.6	0	5.4	0	-55.5	0.5
59	CR+SH+PT_EOC	126	1	254.4	0	5.4	0	-47.1	0.5
60	CR+SH+PT_EOC	126	2	253.5	0	5.4	0	-39.5	0.5
61	CR+SH+PT_EOC	127	0	253.5	0	3.8	0	-39.5	0.5
62	CR+SH+PT_EOC	127	1	252.6	0	3.8	0	-19.1	0.4
63	CR+SH+PT_EOC	127	2	252.1	0	3.8	0	1.3	0.4
64	CR+SH+PT_EOC	128	0	252.1	0	4.1	0	1.3	0.4
65	CR+SH+PT_EOC	128	1	251.7	0	4.1	0	23.5	0.4
66	CR+SH+PT_EOC	128	2	251.7	0	4.1	0	45.6	0.3

Load (Row) Number	User's Load ID	Member ID	Joint ID	Fx (kips)	Fy (kips)	Fz (kips)	Mx (ft*kip)	My (ft*kip)	Mz (ft*kip)
1	DC	102	0	-0.4	0	32.8	0	87	-0.1
2	DC	102	1	-0.2	0	14.4	0	263.5	-0.1
3	DC	102	2	0	0	-4.1	0	302.1	-0.1
4	DC	103	0	0	0	-4.1	0	302.1	-0.1
5	DC	103	1	0.2	0	-22.3	0	204.8	0
6	DC	103	2	0.4	0	-40.5	0	-27	0
7	DC	104	0	0.4	0	-40.5	0	-27	0
8	DC	104	1	0.4	0	-45.8	0	-114.8	0
9	DC	104	2	0.5	0	-52	0	-214.6	0
10	DC	106	0	-1527.2	0	54.5	0.1	-394.7	0
11	DC	106	1	-1527.1	0	51.5	0.1	-343.4	0
12	DC	106	2	-1527.1	0	48.6	0.1	-294.9	-0.1
13	DC	107	0	-1527.1	0	50.4	0.1	-294.9	-0.1
14	DC	107	1	-1526.9	0	33.9	0.1	-68.5	-0.1
15	DC	107	2	-1526.8	0	19.4	0.1	72.8	-0.2
16	DC	108	0	-1526.8	0	18.9	0.1	72.8	-0.2
17	DC	108	1	-1526.6	0	6.1	0.1	137.7	-0.3
18	DC	108	2	-1526.5	0	-6.8	0.1	135.8	-0.4
19	DC	109	0	-1526.5	0	-5.8	0.1	135.8	-0.4
20	DC	109	1	-1526.5	0	-10.8	0.1	120.9	-0.4
21	DC	109	2	-1526.4	0	-16.4	0.1	96.1	-0.5
22	DC	111	0	-2196.8	0	29.1	0.1	8.8	-0.5
23	DC	111	1	-2196.7	0	26.4	0.1	33.6	-0.5
24	DC	111	2	-2196.7	0	23.7	0.1	56	-0.5
25	DC	112	0	-2196.7	0	26.1	0.1	56	-0.5
26	DC	112	1	-2196.5	0	9.1	0.1	153.6	-0.7
27	DC	112	2	-2196.4	0	-5.7	0.1	161.1	-0.8
28	DC	113	0	-2196.4	0	-6.3	0.1	161.1	-0.8
29	DC	113	1	-2196.2	0	-19.6	0.1	91.3	-0.9
30	DC	113	2	-2196.1	0	-33.6	0.1	-50.7	-1.1
31	DC	114	0	-2196.1	0	-32.3	0.1	-50.7	-1.1
32	DC	114	1	-2196.1	0	-37.1	0.1	-104.6	-1.1
33	DC	114	2	-2196	0	-41.8	0.1	-165.9	-1.1
34	DC	116	0	-2195.8	0	25.1	0.1	9.4	-1.2
35	DC	116	1	-2195.8	0	22.6	0.1	28.3	-1.2
36	DC	116	2	-2195.8	0	20.2	0.1	45.3	-1.2
37	DC	117	0	-2195.7	0	22.5	0.1	45.3	-1.2
38	DC	117	1	-2195.6	0	4.9	0.1	124.3	-1.3
39	DC	117	2	-2195.4	0	-9.4	0.1	111.3	-1.5
40	DC	118	0	-2195.4	0	-9.9	0.1	111.3	-1.5
41	DC	118	1	-2195.3	0	-23.8	0.1	16.1	-1.6
42	DC	118	2	-2195.1	0	-37.8	0.1	-157.6	-1.7
43	DC	119	0	-2195.2	0	-36.5	0.1	-157.6	-1.7
44	DC	119	1	-2195.1	0	-40.1	0.1	-203.3	-1.8
45	DC	119	2	-2195.1	0	-43.7	0.1	-253.4	-1.8
46	DC	121	0	-1331.9	0	27.3	0.1	13.6	-1.8
47	DC	121	1	-1331.8	0	24.8	0.1	35.6	-1.8
48	DC	121	2	-1331.8	0	22.2	0.1	55.3	-1.8
49	DC	122	0	-1331.8	0	21.5	0.1	55.3	-1.8
50	DC	122	1	-1331.6	0	4	0.1	129.5	-1.9
51	DC	122	2	-1331.5	0	-10.6	0.1	109.9	-2
52	DC	123	0	-1331.5	0	-10.6	0.1	109.9	-2
53	DC	123	1	-1331.3	0	-25.3	0.1	3.3	-2
54	DC	123	2	-1331.2	0	-40.8	0.1	-190.7	-2.1
55	DC	124	0	-1331.2	0	-40.1	0.1	-190.7	-2.1
56	DC	124	1	-1331.2	0	-42.3	0.1	-221.1	-2.1
57	DC	124	2	-1331.2	0	-44.6	0.1	-253.2	-2.1
58	DC	126	0	381.4	0	11.4	0.1	169.6	-2.2
59	DC	126	1	381.4	0	7.1	0.1	182.5	-2.1
60	DC	126	2	381.5	0	2.8	0.1	189.5	-2.1
61	DC	127	0	381.5	0	3	0.1	189.5	-2.1
62	DC	127	1	381.6	0	-11.7	0.1	164.8	-2
63	DC	127	2	381.8	0	-24.6	0.1	69.4	-1.9
64	DC	128	0	381.7	0	-24.7	0.1	69.4	-1.9
65	DC	128	1	381.9	0	-37.8	0.1	-96.7	-1.8
66	DC	128	2	382	0	-50.9	0.1	-332.6	-1.7

Load (Row) Number	User's Load ID	Member ID	Joint ID	Fx (kips)	Fy (kips)	Fz (kips)	Mx (ft*kip)	My (ft*kip)	Mz (ft*kip)
1	DW	102	0	-5	0	1	0	-16.7	0
2	DW	102	1	-5	0	1	0	-9.4	0
3	DW	102	2	-5	0	1	0	-2.1	0
4	DW	103	0	-5	0	1	0	-2.1	0
5	DW	103	1	-5	0	1	0	5.1	0
6	DW	103	2	-5	0	1	0	12.3	0
7	DW	104	0	-5	0	1	0	12.3	0
8	DW	104	1	-5	0	1	0	14.3	0
9	DW	104	2	-5	0	1	0	16.3	0
10	DW	106	0	-66.2	0	0.6	0	-6	0
11	DW	106	1	-66.2	0	0.6	0	-5.4	0
12	DW	106	2	-66.2	0	0.6	0	-4.8	0
13	DW	107	0	-66.2	0	0.7	0	-4.8	0
14	DW	107	1	-66.2	0	0.7	0	-1.3	0
15	DW	107	2	-66.2	0	0.7	0	2.2	0
16	DW	108	0	-66.2	0	0.6	0	2.2	0
17	DW	108	1	-66.2	0	0.6	0	5.5	0
18	DW	108	2	-66.2	0	0.6	0	8.8	0.1
19	DW	109	0	-66.2	0	0.7	0	8.8	0.1
20	DW	109	1	-66.2	0	0.7	0	10	0.1
21	DW	109	2	-66.2	0	0.7	0	11.2	0.1
22	DW	111	0	-92	0	-0.3	0	5.6	0.1
23	DW	111	1	-92	0	-0.3	0	5.4	0.1
24	DW	111	2	-92	0	-0.3	0	5.1	0.1
25	DW	112	0	-92	0	-0.2	0	5.1	0.1
26	DW	112	1	-92	0	-0.2	0	3.9	0.1
27	DW	112	2	-92	0	-0.2	0	2.7	0.1
28	DW	113	0	-92	0	-0.2	0	2.7	0.1
29	DW	113	1	-92	0	-0.2	0	1.5	0.1
30	DW	113	2	-92	0	-0.2	0	0.2	0.1
31	DW	114	0	-92	0	-0.2	0	0.2	0.1
32	DW	114	1	-92	0	-0.2	0	-0.1	0.1
33	DW	114	2	-92	0	-0.2	0	-0.4	0.1
34	DW	116	0	-87.6	0	-0.5	0	6.3	0.1
35	DW	116	1	-87.6	0	-0.5	0	6	0.1
36	DW	116	2	-87.6	0	-0.5	0	5.6	0.1
37	DW	117	0	-87.6	0	-0.4	0	5.6	0.1
38	DW	117	1	-87.6	0	-0.4	0	3.3	0.1
39	DW	117	2	-87.6	0	-0.4	0	1.1	0.1
40	DW	118	0	-87.6	0	-0.4	0	1.1	0.1
41	DW	118	1	-87.6	0	-0.4	0	-1.2	0.1
42	DW	118	2	-87.6	0	-0.4	0	-3.5	0.1
43	DW	119	0	-87.6	0	-0.4	0	-3.5	0.1
44	DW	119	1	-87.6	0	-0.4	0	-4	0.1
45	DW	119	2	-87.6	0	-0.4	0	-4.4	0.1
46	DW	121	0	-50.9	0	-0.3	0	5.4	0.1
47	DW	121	1	-50.9	0	-0.3	0	5.1	0.1
48	DW	121	2	-50.9	0	-0.3	0	4.8	0.1
49	DW	122	0	-50.9	0	-0.4	0	4.8	0.1
50	DW	122	1	-50.9	0	-0.4	0	2.6	0.1
51	DW	122	2	-50.9	0	-0.4	0	0.4	0.1
52	DW	123	0	-50.9	0	-0.4	0	0.4	0.1
53	DW	123	1	-50.9	0	-0.4	0	-1.9	0.1
54	DW	123	2	-50.9	0	-0.4	0	-4.1	0.1
55	DW	124	0	-50.9	0	-0.3	0	-4.1	0.1
56	DW	124	1	-50.9	0	-0.3	0	-4.3	0.1
57	DW	124	2	-50.9	0	-0.3	0	-4.6	0.1
58	DW	126	0	11.8	0	-0.8	0	9.6	0.1
59	DW	126	1	11.8	0	-0.8	0	8.6	0.1
60	DW	126	2	11.8	0	-0.8	0	7.5	0.1
61	DW	127	0	11.8	0	-0.8	0	7.5	0.1
62	DW	127	1	11.8	0	-0.8	0	3.4	0.1
63	DW	127	2	11.8	0	-0.8	0	-0.6	0.1
64	DW	128	0	11.8	0	-0.8	0	-0.6	0.1
65	DW	128	1	11.8	0	-0.8	0	-4.7	0.1
66	DW	128	2	11.8	0	-0.8	0	-8.8	0.1

Load (Row) Number	User's Load ID	Member ID	Joint ID	Fx (kips)	Fy (kips)	Fz (kips)	Mx (ft*kip)	My (ft*kip)	Mz (ft*kip)
1	LL1_Deck	102	0	-18.3	0	3.6	0	-61.2	0
2	LL1_Deck	102	1	-18.3	0	3.6	0	-34.5	0
3	LL1_Deck	102	2	-18.3	0	3.6	0	-7.8	0
4	LL1_Deck	103	0	-18.3	0	3.6	0	-7.8	0
5	LL1_Deck	103	1	-18.3	0	3.6	0	18.5	0.1
6	LL1_Deck	103	2	-18.3	0	3.6	0	44.9	0.1
7	LL1_Deck	104	0	-18.3	0	3.6	0	44.9	0.1
8	LL1_Deck	104	1	-18.3	0	3.6	0	52.2	0.1
9	LL1_Deck	104	2	-18.3	0	3.6	0	59.5	0.1
10	LL1_Deck	106	0	-242.1	0	2.1	0	-21.8	0.1
11	LL1_Deck	106	1	-242.1	0	2.1	0	-19.8	0.1
12	LL1_Deck	106	2	-242.1	0	2.1	0	-17.7	0.1
13	LL1_Deck	107	0	-242.1	0	2.4	0	-17.7	0.1
14	LL1_Deck	107	1	-242.1	0	2.4	0	-4.9	0.1
15	LL1_Deck	107	2	-242.1	0	2.4	0	8	0.1
16	LL1_Deck	108	0	-242.1	0	2.3	0	8	0.1
17	LL1_Deck	108	1	-242.1	0	2.3	0	20.1	0.2
18	LL1_Deck	108	2	-242.1	0	2.3	0	32.1	0.2
19	LL1_Deck	109	0	-242.1	0	2.5	0	32.1	0.2
20	LL1_Deck	109	1	-242.1	0	2.5	0	36.6	0.2
21	LL1_Deck	109	2	-242.1	0	2.5	0	41.1	0.2
22	LL1_Deck	111	0	-336.6	0	-1.2	0	20.7	0.2
23	LL1_Deck	111	1	-336.6	0	-1.2	0	19.6	0.2
24	LL1_Deck	111	2	-336.6	0	-1.2	0	18.6	0.2
25	LL1_Deck	112	0	-336.6	0	-0.8	0	18.6	0.2
26	LL1_Deck	112	1	-336.6	0	-0.8	0	14.3	0.2
27	LL1_Deck	112	2	-336.6	0	-0.8	0	10	0.2
28	LL1_Deck	113	0	-336.6	0	-0.9	0	10	0.2
29	LL1_Deck	113	1	-336.6	0	-0.9	0	5.3	0.2
30	LL1_Deck	113	2	-336.6	0	-0.9	0	0.6	0.3
31	LL1_Deck	114	0	-336.6	0	-0.7	0	0.6	0.3
32	LL1_Deck	114	1	-336.6	0	-0.7	0	-0.4	0.3
33	LL1_Deck	114	2	-336.6	0	-0.7	0	-1.5	0.3
34	LL1_Deck	116	0	-320.5	0	-1.8	0	23.2	0.3
35	LL1_Deck	116	1	-320.5	0	-1.8	0	21.8	0.3
36	LL1_Deck	116	2	-320.5	0	-1.8	0	20.4	0.3
37	LL1_Deck	117	0	-320.6	0	-1.4	0	20.4	0.3
38	LL1_Deck	117	1	-320.6	0	-1.4	0	12.2	0.3
39	LL1_Deck	117	2	-320.6	0	-1.4	0	3.9	0.3
40	LL1_Deck	118	0	-320.6	0	-1.5	0	3.9	0.3
41	LL1_Deck	118	1	-320.6	0	-1.5	0	-4.5	0.3
42	LL1_Deck	118	2	-320.6	0	-1.5	0	-13	0.3
43	LL1_Deck	119	0	-320.6	0	-1.3	0	-13	0.3
44	LL1_Deck	119	1	-320.6	0	-1.3	0	-14.5	0.3
45	LL1_Deck	119	2	-320.6	0	-1.3	0	-16.1	0.3
46	LL1_Deck	121	0	-186.3	0	-1.3	0	19.6	0.3
47	LL1_Deck	121	1	-186.3	0	-1.3	0	18.6	0.3
48	LL1_Deck	121	2	-186.3	0	-1.3	0	17.5	0.3
49	LL1_Deck	122	0	-186.3	0	-1.4	0	17.5	0.3
50	LL1_Deck	122	1	-186.3	0	-1.4	0	9.4	0.3
51	LL1_Deck	122	2	-186.3	0	-1.4	0	1.3	0.3
52	LL1_Deck	123	0	-186.3	0	-1.4	0	1.3	0.3
53	LL1_Deck	123	1	-186.3	0	-1.4	0	-6.8	0.3
54	LL1_Deck	123	2	-186.3	0	-1.4	0	-14.9	0.3
55	LL1_Deck	124	0	-186.3	0	-1.3	0	-14.9	0.3
56	LL1_Deck	124	1	-186.3	0	-1.3	0	-15.8	0.3
57	LL1_Deck	124	2	-186.3	0	-1.3	0	-16.8	0.3
58	LL1_Deck	126	0	43.1	0	-2.8	0	35.3	0.3
59	LL1_Deck	126	1	43.1	0	-2.8	0	31.3	0.3
60	LL1_Deck	126	2	43.1	0	-2.8	0	27.3	0.3
61	LL1_Deck	127	0	43.1	0	-2.8	0	27.3	0.3
62	LL1_Deck	127	1	43.1	0	-2.8	0	12.6	0.3
63	LL1_Deck	127	2	43.1	0	-2.8	0	-2.1	0.3
64	LL1_Deck	128	0	43.1	0	-2.8	0	-2.1	0.3
65	LL1_Deck	128	1	43.1	0	-2.8	0	-17.1	0.3
66	LL1_Deck	128	2	43.1	0	-2.8	0	-32	0.3

Load (Row) Number	User's Load ID	Member ID	Joint ID	Fx (kips)	Fy (kips)	Fz (kips)	Mx (ft*kip)	My (ft*kip)	Mz (ft*kip)
1	LL1_Deck Offset	102	0	-9.2	-9.8	1.8	16.4	-30.6	-21.5
2	LL1_Deck Offset	102	1	-9.2	-9.8	1.8	16.4	-17.3	-94.6
3	LL1_Deck Offset	102	2	-9.2	-9.8	1.8	16.4	-3.9	-167.7
4	LL1_Deck Offset	103	0	-9.2	-9.8	1.8	16.4	-3.9	-167.7
5	LL1_Deck Offset	103	1	-9.2	-9.8	1.8	16.4	9.3	-239.9
6	LL1_Deck Offset	103	2	-9.2	-9.8	1.8	16.4	22.4	-312.1
7	LL1_Deck Offset	104	0	-9.2	-9.8	1.8	16.6	22.4	-312
8	LL1_Deck Offset	104	1	-9.2	-9.8	1.8	16.6	26.1	-332
9	LL1_Deck Offset	104	2	-9.2	-9.8	1.8	16.6	29.7	-352
10	LL1_Deck Offset	106	0	-121.1	-8	1.1	10.1	-10.9	-369.7
11	LL1_Deck Offset	106	1	-121.1	-8	1.1	10.1	-9.9	-377.4
12	LL1_Deck Offset	106	2	-121.1	-8	1.1	10.1	-8.9	-385.1
13	LL1_Deck Offset	107	0	-121.1	-8	1.2	10.5	-8.9	-385.1
14	LL1_Deck Offset	107	1	-121.1	-8	1.2	10.5	-2.4	-428
15	LL1_Deck Offset	107	2	-121.1	-8	1.2	10.5	4	-470.8
16	LL1_Deck Offset	108	0	-121.1	-8	1.2	10.4	4	-470.8
17	LL1_Deck Offset	108	1	-121.1	-8	1.2	10.4	10	-512.2
18	LL1_Deck Offset	108	2	-121.1	-8	1.2	10.4	16	-553.7
19	LL1_Deck Offset	109	0	-121.1	-8	1.2	10.7	16	-553.7
20	LL1_Deck Offset	109	1	-121.1	-8	1.2	10.7	18.3	-568.2
21	LL1_Deck Offset	109	2	-121.1	-8	1.2	10.7	20.5	-582.7
22	LL1_Deck Offset	111	0	-168.3	0.9	-0.6	6.5	10.3	-580.9
23	LL1_Deck Offset	111	1	-168.3	0.9	-0.6	6.5	9.8	-580.1
24	LL1_Deck Offset	111	2	-168.3	0.9	-0.6	6.5	9.3	-579.3
25	LL1_Deck Offset	112	0	-168.3	0.9	-0.4	7.1	9.3	-579.2
26	LL1_Deck Offset	112	1	-168.3	0.9	-0.4	7.1	7.2	-574.1
27	LL1_Deck Offset	112	2	-168.3	0.9	-0.4	7.1	5	-568.9
28	LL1_Deck Offset	113	0	-168.3	0.9	-0.4	7	5	-568.9
29	LL1_Deck Offset	113	1	-168.3	0.9	-0.4	7	2.7	-563.9
30	LL1_Deck Offset	113	2	-168.3	0.9	-0.4	7	0.3	-558.9
31	LL1_Deck Offset	114	0	-168.3	0.9	-0.3	7.3	0.3	-558.9
32	LL1_Deck Offset	114	1	-168.3	0.9	-0.3	7.3	-0.2	-557.4
33	LL1_Deck Offset	114	2	-168.3	0.9	-0.3	7.3	-0.7	-556
34	LL1_Deck Offset	116	0	-160.3	11.5	-0.9	4.1	11.6	-566.9
35	LL1_Deck Offset	116	1	-160.3	11.5	-0.9	4.1	10.9	-557.7
36	LL1_Deck Offset	116	2	-160.3	11.5	-0.9	4.1	10.2	-548.6
37	LL1_Deck Offset	117	0	-160.3	11.5	-0.7	4.7	10.2	-548.6
38	LL1_Deck Offset	117	1	-160.3	11.5	-0.7	4.7	6.1	-482
39	LL1_Deck Offset	117	2	-160.3	11.5	-0.7	4.7	2	-415.5
40	LL1_Deck Offset	118	0	-160.3	11.5	-0.7	4.6	2	-415.5
41	LL1_Deck Offset	118	1	-160.3	11.5	-0.7	4.6	-2.3	-350.5
42	LL1_Deck Offset	118	2	-160.3	11.5	-0.7	4.6	-6.5	-285.6
43	LL1_Deck Offset	119	0	-160.3	11.5	-0.7	4.8	-6.5	-285.6
44	LL1_Deck Offset	119	1	-160.3	11.5	-0.7	4.8	-7.3	-271.8
45	LL1_Deck Offset	119	2	-160.3	11.5	-0.7	4.8	-8.1	-258.1
46	LL1_Deck Offset	121	0	-93.2	18.9	-0.6	9.2	9.8	-257.4
47	LL1_Deck Offset	121	1	-93.2	18.9	-0.6	9.2	9.3	-241.4
48	LL1_Deck Offset	121	2	-93.2	18.9	-0.6	9.2	8.7	-225.5
49	LL1_Deck Offset	122	0	-93.2	18.9	-0.7	9.1	8.7	-225.5
50	LL1_Deck Offset	122	1	-93.2	18.9	-0.7	9.1	4.7	-113.2
51	LL1_Deck Offset	122	2	-93.2	18.9	-0.7	9.1	0.7	-0.8
52	LL1_Deck Offset	123	0	-93.2	18.9	-0.7	9.1	0.7	-0.8
53	LL1_Deck Offset	123	1	-93.2	18.9	-0.7	9.1	-3.4	111.5
54	LL1_Deck Offset	123	2	-93.2	18.9	-0.7	9.1	-7.4	223.8
55	LL1_Deck Offset	124	0	-93.2	18.9	-0.6	9	-7.4	223.8
56	LL1_Deck Offset	124	1	-93.2	18.9	-0.6	9	-7.9	237.8
57	LL1_Deck Offset	124	2	-93.2	18.9	-0.6	9	-8.4	251.7
58	LL1_Deck Offset	126	0	21.6	24.9	-1.4	-0.4	17.6	293.1
59	LL1_Deck Offset	126	1	21.6	24.9	-1.4	-0.4	15.7	328
60	LL1_Deck Offset	126	2	21.6	24.9	-1.4	-0.4	13.7	362.9
61	LL1_Deck Offset	127	0	21.6	24.9	-1.4	-0.2	13.7	362.9
62	LL1_Deck Offset	127	1	21.6	24.9	-1.4	-0.2	6.3	493.7
63	LL1_Deck Offset	127	2	21.6	24.9	-1.4	-0.2	-1.1	624.5
64	LL1_Deck Offset	128	0	21.6	24.9	-1.4	-0.2	-1.1	624.5
65	LL1_Deck Offset	128	1	21.6	24.9	-1.4	-0.2	-8.5	756.8
66	LL1_Deck Offset	128	2	21.6	24.9	-1.4	-0.2	-16	889.1

Load (Row) Number	User's Load ID	Member ID	Joint ID	Fx (kips)	Fy (kips)	Fz (kips)	Mx (ft*kip)	My (ft*kip)	Mz (ft*kip)
1	LL1_Roof	102	0	-3.8	0	5.1	0	-20.2	0
2	LL1_Roof	102	1	-3.8	0	2.7	0	9.1	0
3	LL1_Roof	102	2	-3.8	0	0.3	0	20.4	0
4	LL1_Roof	103	0	-3.8	0	0.3	0	20.4	0
5	LL1_Roof	103	1	-3.7	0	-2	0	14.1	0
6	LL1_Roof	103	2	-3.7	0	-4.4	0	-9.7	0
7	LL1_Roof	104	0	-3.7	0	-4.4	0	-9.7	0
8	LL1_Roof	104	1	-3.7	0	-5	0	-19.3	0
9	LL1_Roof	104	2	-3.7	0	-5.7	0	-30.3	0
10	LL1_Roof	106	0	-31.2	0	4.7	0	-24.9	0
11	LL1_Roof	106	1	-31.2	0	4.3	0	-20.5	0
12	LL1_Roof	106	2	-31.2	0	4	0	-16.5	0
13	LL1_Roof	107	0	-31.2	0	4.1	0	-16.5	0
14	LL1_Roof	107	1	-31.2	0	2.3	0	0.8	0
15	LL1_Roof	107	2	-31.2	0	0.6	0	8.8	0
16	LL1_Roof	108	0	-31.2	0	0.6	0	8.8	0
17	LL1_Roof	108	1	-31.2	0	-1	0	7.6	0
18	LL1_Roof	108	2	-31.2	0	-2.7	0	-2.2	0
19	LL1_Roof	109	0	-31.2	0	-2.7	0	-2.2	0
20	LL1_Roof	109	1	-31.2	0	-3.3	0	-7.6	0
21	LL1_Roof	109	2	-31.1	0	-3.9	0	-14.1	0
22	LL1_Roof	111	0	-41.7	0	4.1	0	-15.3	0
23	LL1_Roof	111	1	-41.7	0	3.8	0	-11.8	0
24	LL1_Roof	111	2	-41.7	0	3.5	0	-8.6	0
25	LL1_Roof	112	0	-41.7	0	3.5	0	-8.6	0
26	LL1_Roof	112	1	-41.7	0	1.8	0	6.1	0
27	LL1_Roof	112	2	-41.7	0	0	0	10.9	0
28	LL1_Roof	113	0	-41.7	0	0	0	10.9	0
29	LL1_Roof	113	1	-41.7	0	-1.8	0	6.1	0
30	LL1_Roof	113	2	-41.7	0	-3.5	0	-8	0.1
31	LL1_Roof	114	0	-41.7	0	-3.5	0	-8	0.1
32	LL1_Roof	114	1	-41.6	0	-4	0	-13.8	0.1
33	LL1_Roof	114	2	-41.6	0	-4.5	0	-20.3	0.1
34	LL1_Roof	116	0	-38.6	0	4.1	0	-16.2	0.1
35	LL1_Roof	116	1	-38.6	0	3.8	0	-13.1	0.1
36	LL1_Roof	116	2	-38.6	0	3.6	0	-10.2	0.1
37	LL1_Roof	117	0	-38.6	0	3.6	0	-10.2	0.1
38	LL1_Roof	117	1	-38.6	0	1.8	0	5.3	0.1
39	LL1_Roof	117	2	-38.6	0	-0.1	0	10.1	0.1
40	LL1_Roof	118	0	-38.6	0	-0.1	0	10.1	0.1
41	LL1_Roof	118	1	-38.6	0	-1.9	0	4.4	0.1
42	LL1_Roof	118	2	-38.5	0	-3.7	0	-11.5	0.1
43	LL1_Roof	119	0	-38.5	0	-3.7	0	-11.5	0.1
44	LL1_Roof	119	1	-38.5	0	-4.1	0	-16.1	0.1
45	LL1_Roof	119	2	-38.5	0	-4.5	0	-21.2	0.1
46	LL1_Roof	121	0	-22.3	0	4.1	0	-16.7	0.1
47	LL1_Roof	121	1	-22.3	0	3.9	0	-13.3	0.1
48	LL1_Roof	121	2	-22.3	0	3.6	0	-10.1	0.1
49	LL1_Roof	122	0	-22.3	0	3.6	0	-10.1	0.1
50	LL1_Roof	122	1	-22.3	0	1.7	0	5.6	0.1
51	LL1_Roof	122	2	-22.3	0	-0.2	0	10	0.1
52	LL1_Roof	123	0	-22.3	0	-0.2	0	10	0.1
53	LL1_Roof	123	1	-22.2	0	-2.1	0	3.2	0.1
54	LL1_Roof	123	2	-22.2	0	-4	0	-14.9	0.1
55	LL1_Roof	124	0	-22.2	0	-4	0	-14.9	0.1
56	LL1_Roof	124	1	-22.2	0	-4.2	0	-17.9	0.1
57	LL1_Roof	124	2	-22.2	0	-4.5	0	-21.1	0.1
58	LL1_Roof	126	0	1.3	0	4.1	0	-15.9	0.1
59	LL1_Roof	126	1	1.3	0	3.6	0	-10.5	0.1
60	LL1_Roof	126	2	1.3	0	3.2	0	-5.8	0.1
61	LL1_Roof	127	0	1.3	0	3.2	0	-5.8	0.1
62	LL1_Roof	127	1	1.3	0	1.5	0	6.5	0.1
63	LL1_Roof	127	2	1.3	0	-0.2	0	9.9	0.1
64	LL1_Roof	128	0	1.3	0	-0.2	0	9.9	0.1
65	LL1_Roof	128	1	1.3	0	-1.9	0	4.3	0.1
66	LL1_Roof	128	2	1.3	0	-3.6	0	-10.3	0.1

Load (Row) Number	User's Load ID	Member ID	Joint ID	Fx (kips)	Fy (kips)	Fz (kips)	Mx (ft*kip)	My (ft*kip)	Mz (ft*kip)
1	LL2_Deck	102	0	-20.4	0	4	0	-69.4	0
2	LL2_Deck	102	1	-20.4	0	4	0	-39.4	0.1
3	LL2_Deck	102	2	-20.4	0	4	0	-9.3	0.2
4	LL2_Deck	103	0	-20.4	0	4	0	-9.3	0.2
5	LL2_Deck	103	1	-20.4	0	4	0	20.3	0.2
6	LL2_Deck	103	2	-20.4	0	4	0	50	0.3
7	LL2_Deck	104	0	-20.4	0	4	0	50	0.3
8	LL2_Deck	104	1	-20.4	0	4	0	58.2	0.3
9	LL2_Deck	104	2	-20.4	0	4	0	66.4	0.3
10	LL2_Deck	106	0	-273.5	0	2.8	0	-30.2	0.4
11	LL2_Deck	106	1	-273.5	0	2.8	0	-27.5	0.4
12	LL2_Deck	106	2	-273.5	0	2.8	0	-24.8	0.4
13	LL2_Deck	107	0	-273.5	0	3.1	0	-24.8	0.4
14	LL2_Deck	107	1	-273.5	0	3.1	0	-8.1	0.4
15	LL2_Deck	107	2	-273.5	0	3.1	0	8.6	0.5
16	LL2_Deck	108	0	-273.5	0	3	0	8.6	0.5
17	LL2_Deck	108	1	-273.5	0	3	0	24.2	0.6
18	LL2_Deck	108	2	-273.5	0	3	0	39.9	0.6
19	LL2_Deck	109	0	-273.5	0	3.2	0	39.9	0.6
20	LL2_Deck	109	1	-273.5	0	3.2	0	45.6	0.6
21	LL2_Deck	109	2	-273.5	0	3.2	0	51.4	0.7
22	LL2_Deck	111	0	-386.4	0	-1	0	19.5	0.7
23	LL2_Deck	111	1	-386.4	0	-1	0	18.7	0.7
24	LL2_Deck	111	2	-386.4	0	-1	0	17.8	0.7
25	LL2_Deck	112	0	-386.4	0	-0.5	0	17.8	0.7
26	LL2_Deck	112	1	-386.4	0	-0.5	0	14.8	0.8
27	LL2_Deck	112	2	-386.4	0	-0.5	0	11.8	0.8
28	LL2_Deck	113	0	-386.4	0	-0.7	0	11.8	0.8
29	LL2_Deck	113	1	-386.4	0	-0.7	0	8.2	0.9
30	LL2_Deck	113	2	-386.4	0	-0.7	0	4.7	1
31	LL2_Deck	114	0	-386.4	0	-0.4	0	4.7	1
32	LL2_Deck	114	1	-386.4	0	-0.4	0	4.1	1
33	LL2_Deck	114	2	-386.4	0	-0.4	0	3.4	1
34	LL2_Deck	116	0	-375.3	0	-1.8	0	24.6	1
35	LL2_Deck	116	1	-375.3	0	-1.8	0	23.2	1
36	LL2_Deck	116	2	-375.3	0	-1.8	0	21.7	1
37	LL2_Deck	117	0	-375.3	0	-1.4	0	21.7	1
38	LL2_Deck	117	1	-375.3	0	-1.4	0	13.5	1.1
39	LL2_Deck	117	2	-375.3	0	-1.4	0	5.2	1.2
40	LL2_Deck	118	0	-375.3	0	-1.5	0	5.2	1.2
41	LL2_Deck	118	1	-375.3	0	-1.5	0	-3.4	1.2
42	LL2_Deck	118	2	-375.3	0	-1.5	0	-11.9	1.3
43	LL2_Deck	119	0	-375.3	0	-1.3	0	-11.9	1.3
44	LL2_Deck	119	1	-375.3	0	-1.3	0	-13.5	1.3
45	LL2_Deck	119	2	-375.3	0	-1.3	0	-15	1.3
46	LL2_Deck	121	0	-226.6	0	-1.4	0	22.4	1.3
47	LL2_Deck	121	1	-226.6	0	-1.4	0	21.3	1.4
48	LL2_Deck	121	2	-226.6	0	-1.4	0	20.1	1.4
49	LL2_Deck	122	0	-226.6	0	-1.5	0	20.1	1.4
50	LL2_Deck	122	1	-226.6	0	-1.5	0	11.4	1.4
51	LL2_Deck	122	2	-226.6	0	-1.5	0	2.7	1.5
52	LL2_Deck	123	0	-226.6	0	-1.5	0	2.7	1.5
53	LL2_Deck	123	1	-226.6	0	-1.5	0	-6	1.6
54	LL2_Deck	123	2	-226.6	0	-1.5	0	-14.7	1.6
55	LL2_Deck	124	0	-226.6	0	-1.4	0	-14.7	1.6
56	LL2_Deck	124	1	-226.6	0	-1.4	0	-15.7	1.6
57	LL2_Deck	124	2	-226.6	0	-1.4	0	-16.7	1.6
58	LL2_Deck	126	0	30.9	0	-3.2	0	41.3	1.6
59	LL2_Deck	126	1	30.9	0	-3.2	0	36.8	1.6
60	LL2_Deck	126	2	30.9	0	-3.2	0	32.3	1.7
61	LL2_Deck	127	0	30.9	0	-3.2	0	32.3	1.7
62	LL2_Deck	127	1	30.9	0	-3.2	0	15.5	1.7
63	LL2_Deck	127	2	30.9	0	-3.2	0	-1.3	1.8
64	LL2_Deck	128	0	30.9	0	-3.2	0	-1.3	1.8
65	LL2_Deck	128	1	30.9	0	-3.2	0	-18.3	1.8
66	LL2_Deck	128	2	30.9	0	-3.2	0	-35.2	1.9

Load (Row) Number	User's Load ID	Member ID	Joint ID	Fx (kips)	Fy (kips)	Fz (kips)	Mx (ft*kip)	My (ft*kip)	Mz (ft*kip)
1	LL2_Deck Offset	102	0	-10.2	-10.2	2	16.4	-34.7	-22.1
2	LL2_Deck Offset	102	1	-10.2	-10.2	2	16.4	-19.7	-98
3	LL2_Deck Offset	102	2	-10.2	-10.2	2	16.4	-4.7	-173.9
4	LL2_Deck Offset	103	0	-10.2	-10.2	2	16.4	-4.7	-173.9
5	LL2_Deck Offset	103	1	-10.2	-10.2	2	16.4	10.2	-248.9
6	LL2_Deck Offset	103	2	-10.2	-10.2	2	16.4	25	-323.8
7	LL2_Deck Offset	104	0	-10.2	-10.2	2	16.6	25	-323.8
8	LL2_Deck Offset	104	1	-10.2	-10.2	2	16.6	29.1	-344.5
9	LL2_Deck Offset	104	2	-10.2	-10.2	2	16.6	33.2	-365.3
10	LL2_Deck Offset	106	0	-136.7	-8.6	1.4	9.8	-15.1	-384.1
11	LL2_Deck Offset	106	1	-136.7	-8.6	1.4	9.8	-13.7	-392.5
12	LL2_Deck Offset	106	2	-136.7	-8.6	1.4	9.8	-12.4	-400.9
13	LL2_Deck Offset	107	0	-136.7	-8.6	1.6	10.2	-12.4	-400.9
14	LL2_Deck Offset	107	1	-136.7	-8.6	1.6	10.2	-4.1	-447.4
15	LL2_Deck Offset	107	2	-136.7	-8.6	1.6	10.2	4.3	-493.9
16	LL2_Deck Offset	108	0	-136.7	-8.6	1.5	10.1	4.3	-493.9
17	LL2_Deck Offset	108	1	-136.7	-8.6	1.5	10.1	12.1	-538.9
18	LL2_Deck Offset	108	2	-136.7	-8.6	1.5	10.1	19.9	-583.9
19	LL2_Deck Offset	109	0	-136.7	-8.6	1.6	10.4	19.9	-583.9
20	LL2_Deck Offset	109	1	-136.7	-8.6	1.6	10.4	22.8	-599.6
21	LL2_Deck Offset	109	2	-136.7	-8.6	1.6	10.4	25.7	-615.4
22	LL2_Deck Offset	111	0	-193.2	-0.1	-0.5	6.8	9.8	-613.9
23	LL2_Deck Offset	111	1	-193.2	-0.1	-0.5	6.8	9.3	-614
24	LL2_Deck Offset	111	2	-193.2	-0.1	-0.5	6.8	8.9	-614.1
25	LL2_Deck Offset	112	0	-193.2	-0.1	-0.3	7.5	8.9	-614.1
26	LL2_Deck Offset	112	1	-193.2	-0.1	-0.3	7.5	7.4	-614.6
27	LL2_Deck Offset	112	2	-193.2	-0.1	-0.3	7.5	5.9	-615.2
28	LL2_Deck Offset	113	0	-193.2	-0.1	-0.3	7.3	5.9	-615.2
29	LL2_Deck Offset	113	1	-193.2	-0.1	-0.3	7.3	4.1	-615.7
30	LL2_Deck Offset	113	2	-193.2	-0.1	-0.3	7.3	2.4	-616.2
31	LL2_Deck Offset	114	0	-193.2	-0.1	-0.2	7.6	2.4	-616.2
32	LL2_Deck Offset	114	1	-193.2	-0.1	-0.2	7.6	2	-616.4
33	LL2_Deck Offset	114	2	-193.2	-0.1	-0.2	7.6	1.7	-616.5
34	LL2_Deck Offset	116	0	-187.7	10.1	-0.9	5.5	12.3	-627.3
35	LL2_Deck Offset	116	1	-187.7	10.1	-0.9	5.5	11.6	-619.3
36	LL2_Deck Offset	116	2	-187.7	10.1	-0.9	5.5	10.9	-611.3
37	LL2_Deck Offset	117	0	-187.7	10.1	-0.7	6.1	10.9	-611.3
38	LL2_Deck Offset	117	1	-187.7	10.1	-0.7	6.1	6.7	-553.1
39	LL2_Deck Offset	117	2	-187.7	10.1	-0.7	6.1	2.6	-494.9
40	LL2_Deck Offset	118	0	-187.7	10.1	-0.8	6	2.6	-494.9
41	LL2_Deck Offset	118	1	-187.7	10.1	-0.8	6	-1.7	-438
42	LL2_Deck Offset	118	2	-187.7	10.1	-0.8	6	-6	-381.1
43	LL2_Deck Offset	119	0	-187.7	10.1	-0.6	6.3	-6	-381.1
44	LL2_Deck Offset	119	1	-187.7	10.1	-0.6	6.3	-6.7	-369.1
45	LL2_Deck Offset	119	2	-187.7	10.1	-0.6	6.3	-7.5	-357.1
46	LL2_Deck Offset	121	0	-113.3	17.1	-0.7	11.7	11.2	-357.1
47	LL2_Deck Offset	121	1	-113.3	17.1	-0.7	11.7	10.6	-342.6
48	LL2_Deck Offset	121	2	-113.3	17.1	-0.7	11.7	10.1	-328.2
49	LL2_Deck Offset	122	0	-113.3	17.1	-0.7	11.5	10.1	-328.2
50	LL2_Deck Offset	122	1	-113.3	17.1	-0.7	11.5	5.7	-226.6
51	LL2_Deck Offset	122	2	-113.3	17.1	-0.7	11.5	1.4	-125.1
52	LL2_Deck Offset	123	0	-113.3	17.1	-0.7	11.5	1.4	-125.1
53	LL2_Deck Offset	123	1	-113.3	17.1	-0.7	11.5	-3	-23.5
54	LL2_Deck Offset	123	2	-113.3	17.1	-0.7	11.5	-7.4	78.1
55	LL2_Deck Offset	124	0	-113.3	17.1	-0.7	11.5	-7.4	78.1
56	LL2_Deck Offset	124	1	-113.3	17.1	-0.7	11.5	-7.9	90.7
57	LL2_Deck Offset	124	2	-113.3	17.1	-0.7	11.5	-8.4	103.3
58	LL2_Deck Offset	126	0	15.5	22.7	-1.6	3.4	20.6	141.5
59	LL2_Deck Offset	126	1	15.5	22.7	-1.6	3.4	18.4	173.3
60	LL2_Deck Offset	126	2	15.5	22.7	-1.6	3.4	16.1	205.2
61	LL2_Deck Offset	127	0	15.5	22.7	-1.6	3.5	16.1	205.2
62	LL2_Deck Offset	127	1	15.5	22.7	-1.6	3.5	7.7	324.6
63	LL2_Deck Offset	127	2	15.5	22.7	-1.6	3.5	-0.6	443.9
64	LL2_Deck Offset	128	0	15.5	22.7	-1.6	3.4	-0.6	443.9
65	LL2_Deck Offset	128	1	15.5	22.7	-1.6	3.4	-9.1	564.6
66	LL2_Deck Offset	128	2	15.5	22.7	-1.6	3.4	-17.6	685.3

Load (Row) Number	User's Load ID	Member ID	Joint ID	Fx (kips)	Fy (kips)	Fz (kips)	Mx (ft*kip)	My (ft*kip)	Mz (ft*kip)
1	LL2_Roof	102	0	-4	0	5.2	0	-21.1	0
2	LL2_Roof	102	1	-4	0	2.8	0	8.5	0
3	LL2_Roof	102	2	-4	0	0.4	0	20.3	0
4	LL2_Roof	103	0	-4	0	0.4	0	20.3	0
5	LL2_Roof	103	1	-3.9	0	-2	0	14.3	0
6	LL2_Roof	103	2	-3.9	0	-4.4	0	-9.1	0
7	LL2_Roof	104	0	-3.9	0	-4.3	0	-9.1	0
8	LL2_Roof	104	1	-3.9	0	-5	0	-18.7	0
9	LL2_Roof	104	2	-3.9	0	-5.7	0	-29.5	0
10	LL2_Roof	106	0	-34.4	0	4.7	0	-25.7	0
11	LL2_Roof	106	1	-34.4	0	4.4	0	-21.3	0
12	LL2_Roof	106	2	-34.4	0	4.1	0	-17.2	0
13	LL2_Roof	107	0	-34.4	0	4.1	0	-17.2	0
14	LL2_Roof	107	1	-34.4	0	2.4	0	0.4	0.1
15	LL2_Roof	107	2	-34.4	0	0.7	0	8.8	0.1
16	LL2_Roof	108	0	-34.4	0	0.7	0	8.8	0.1
17	LL2_Roof	108	1	-34.4	0	-1	0	8.1	0.1
18	LL2_Roof	108	2	-34.4	0	-2.6	0	-1.4	0.1
19	LL2_Roof	109	0	-34.4	0	-2.6	0	-1.4	0.1
20	LL2_Roof	109	1	-34.4	0	-3.2	0	-6.7	0.1
21	LL2_Roof	109	2	-34.4	0	-3.8	0	-13	0.1
22	LL2_Roof	111	0	-46.7	0	4.1	0	-15.4	0.1
23	LL2_Roof	111	1	-46.7	0	3.8	0	-11.9	0.1
24	LL2_Roof	111	2	-46.7	0	3.5	0	-8.6	0.1
25	LL2_Roof	112	0	-46.7	0	3.6	0	-8.6	0.1
26	LL2_Roof	112	1	-46.6	0	1.8	0	6.2	0.1
27	LL2_Roof	112	2	-46.6	0	0	0	11.1	0.1
28	LL2_Roof	113	0	-46.6	0	0	0	11.1	0.1
29	LL2_Roof	113	1	-46.6	0	-1.7	0	6.4	0.1
30	LL2_Roof	113	2	-46.6	0	-3.5	0	-7.6	0.1
31	LL2_Roof	114	0	-46.6	0	-3.4	0	-7.6	0.1
32	LL2_Roof	114	1	-46.6	0	-3.9	0	-13.4	0.1
33	LL2_Roof	114	2	-46.6	0	-4.4	0	-19.9	0.1
34	LL2_Roof	116	0	-43.7	0	4.1	0	-16	0.1
35	LL2_Roof	116	1	-43.7	0	3.8	0	-12.9	0.1
36	LL2_Roof	116	2	-43.7	0	3.5	0	-10	0.1
37	LL2_Roof	117	0	-43.7	0	3.6	0	-10	0.1
38	LL2_Roof	117	1	-43.7	0	1.7	0	5.4	0.1
39	LL2_Roof	117	2	-43.7	0	-0.1	0	10.2	0.1
40	LL2_Roof	118	0	-43.7	0	-0.1	0	10.2	0.1
41	LL2_Roof	118	1	-43.7	0	-1.9	0	4.5	0.1
42	LL2_Roof	118	2	-43.7	0	-3.7	0	-11.4	0.2
43	LL2_Roof	119	0	-43.7	0	-3.7	0	-11.4	0.2
44	LL2_Roof	119	1	-43.7	0	-4.1	0	-16.1	0.2
45	LL2_Roof	119	2	-43.7	0	-4.5	0	-21.2	0.2
46	LL2_Roof	121	0	-25.1	0	4.1	0	-16.3	0.2
47	LL2_Roof	121	1	-25.1	0	3.9	0	-12.9	0.2
48	LL2_Roof	121	2	-25.1	0	3.6	0	-9.8	0.2
49	LL2_Roof	122	0	-25.1	0	3.6	0	-9.8	0.2
50	LL2_Roof	122	1	-25.1	0	1.7	0	5.8	0.2
51	LL2_Roof	122	2	-25.1	0	-0.2	0	10.2	0.2
52	LL2_Roof	123	0	-25.1	0	-0.2	0	10.2	0.2
53	LL2_Roof	123	1	-25.1	0	-2.1	0	3.2	0.2
54	LL2_Roof	123	2	-25	0	-4	0	-15	0.2
55	LL2_Roof	124	0	-25	0	-4	0	-15	0.2
56	LL2_Roof	124	1	-25	0	-4.2	0	-18	0.2
57	LL2_Roof	124	2	-25	0	-4.5	0	-21.2	0.2
58	LL2_Roof	126	0	2.6	0	4	0	-15.3	0.2
59	LL2_Roof	126	1	2.6	0	3.6	0	-10	0.2
60	LL2_Roof	126	2	2.6	0	3.1	0	-5.3	0.2
61	LL2_Roof	127	0	2.6	0	3.1	0	-5.3	0.2
62	LL2_Roof	127	1	2.6	0	1.5	0	6.8	0.2
63	LL2_Roof	127	2	2.6	0	-0.2	0	10.1	0.2
64	LL2_Roof	128	0	2.6	0	-0.2	0	10.1	0.2
65	LL2_Roof	128	1	2.6	0	-1.9	0	4.4	0.2
66	LL2_Roof	128	2	2.6	0	-3.6	0	-10.4	0.2

Load (Row) Number	User's Load ID	Member ID	Joint ID	Fx (kips)	Fy (kips)	Fz (kips)	Mx (ft*kip)	My (ft*kip)	Mz (ft*kip)
1	LL3_Deck	102	0	2.1	0	-0.4	0	8.2	0
2	LL3_Deck	102	1	2.1	0	-0.4	0	4.8	-0.1
3	LL3_Deck	102	2	2.1	0	-0.4	0	1.5	-0.1
4	LL3_Deck	103	0	2.1	0	-0.4	0	1.5	-0.1
5	LL3_Deck	103	1	2.1	0	-0.4	0	-1.8	-0.2
6	LL3_Deck	103	2	2.1	0	-0.4	0	-5.1	-0.2
7	LL3_Deck	104	0	2.1	0	-0.4	0	-5.1	-0.2
8	LL3_Deck	104	1	2.1	0	-0.4	0	-6	-0.2
9	LL3_Deck	104	2	2.1	0	-0.4	0	-6.9	-0.2
10	LL3_Deck	106	0	31.3	0	-0.7	0	8.4	-0.2
11	LL3_Deck	106	1	31.3	0	-0.7	0	7.7	-0.3
12	LL3_Deck	106	2	31.3	0	-0.7	0	7.1	-0.3
13	LL3_Deck	107	0	31.3	0	-0.7	0	7.1	-0.3
14	LL3_Deck	107	1	31.3	0	-0.7	0	3.3	-0.3
15	LL3_Deck	107	2	31.3	0	-0.7	0	-0.5	-0.4
16	LL3_Deck	108	0	31.3	0	-0.7	0	-0.5	-0.4
17	LL3_Deck	108	1	31.3	0	-0.7	0	-4.1	-0.4
18	LL3_Deck	108	2	31.3	0	-0.7	0	-7.8	-0.4
19	LL3_Deck	109	0	31.3	0	-0.7	0	-7.8	-0.4
20	LL3_Deck	109	1	31.3	0	-0.7	0	-9.1	-0.5
21	LL3_Deck	109	2	31.3	0	-0.7	0	-10.4	-0.5
22	LL3_Deck	111	0	49.8	0	-0.2	0	1.1	-0.5
23	LL3_Deck	111	1	49.8	0	-0.2	0	1	-0.5
24	LL3_Deck	111	2	49.8	0	-0.2	0	0.8	-0.5
25	LL3_Deck	112	0	49.8	0	-0.2	0	0.8	-0.5
26	LL3_Deck	112	1	49.8	0	-0.2	0	-0.5	-0.6
27	LL3_Deck	112	2	49.8	0	-0.2	0	-1.8	-0.6
28	LL3_Deck	113	0	49.8	0	-0.2	0	-1.8	-0.6
29	LL3_Deck	113	1	49.8	0	-0.2	0	-2.9	-0.7
30	LL3_Deck	113	2	49.8	0	-0.2	0	-4.1	-0.7
31	LL3_Deck	114	0	49.8	0	-0.2	0	-4.1	-0.7
32	LL3_Deck	114	1	49.8	0	-0.2	0	-4.5	-0.7
33	LL3_Deck	114	2	49.8	0	-0.2	0	-4.9	-0.7
34	LL3_Deck	116	0	54.8	0	0.1	0	-1.4	-0.7
35	LL3_Deck	116	1	54.8	0	0.1	0	-1.4	-0.8
36	LL3_Deck	116	2	54.8	0	0.1	0	-1.3	-0.8
37	LL3_Deck	117	0	54.8	0	0	0	-1.3	-0.8
38	LL3_Deck	117	1	54.8	0	0	0	-1.3	-0.8
39	LL3_Deck	117	2	54.8	0	0	0	-1.3	-0.9
40	LL3_Deck	118	0	54.8	0	0	0	-1.3	-0.9
41	LL3_Deck	118	1	54.8	0	0	0	-1.1	-0.9
42	LL3_Deck	118	2	54.8	0	0	0	-1	-1
43	LL3_Deck	119	0	54.8	0	0	0	-1	-1
44	LL3_Deck	119	1	54.8	0	0	0	-1.1	-1
45	LL3_Deck	119	2	54.8	0	0	0	-1.1	-1
46	LL3_Deck	121	0	40.3	0	0.1	0	-2.8	-1
47	LL3_Deck	121	1	40.3	0	0.1	0	-2.7	-1
48	LL3_Deck	121	2	40.3	0	0.1	0	-2.6	-1
49	LL3_Deck	122	0	40.3	0	0.1	0	-2.6	-1
50	LL3_Deck	122	1	40.3	0	0.1	0	-2	-1.1
51	LL3_Deck	122	2	40.3	0	0.1	0	-1.4	-1.2
52	LL3_Deck	123	0	40.3	0	0.1	0	-1.4	-1.2
53	LL3_Deck	123	1	40.3	0	0.1	0	-0.8	-1.2
54	LL3_Deck	123	2	40.3	0	0.1	0	-0.2	-1.3
55	LL3_Deck	124	0	40.3	0	0.1	0	-0.2	-1.3
56	LL3_Deck	124	1	40.3	0	0.1	0	-0.1	-1.3
57	LL3_Deck	124	2	40.3	0	0.1	0	0	-1.3
58	LL3_Deck	126	0	12.2	0	0.4	0	-6	-1.3
59	LL3_Deck	126	1	12.2	0	0.4	0	-5.5	-1.3
60	LL3_Deck	126	2	12.2	0	0.4	0	-4.9	-1.3
61	LL3_Deck	127	0	12.2	0	0.4	0	-4.9	-1.3
62	LL3_Deck	127	1	12.2	0	0.4	0	-2.9	-1.4
63	LL3_Deck	127	2	12.2	0	0.4	0	-0.9	-1.5
64	LL3_Deck	128	0	12.2	0	0.4	0	-0.9	-1.5
65	LL3_Deck	128	1	12.2	0	0.4	0	1.2	-1.5
66	LL3_Deck	128	2	12.2	0	0.4	0	3.2	-1.6

Load (Row) Number	User's Load ID	Member ID	Joint ID	Fx (kips)	Fy (kips)	Fz (kips)	Mx (ft*kip)	My (ft*kip)	Mz (ft*kip)
1	LL3_Deck Offset	102	0	1	0.4	-0.2	0	4.1	0.6
2	LL3_Deck Offset	102	1	1	0.4	-0.2	0	2.4	3.4
3	LL3_Deck Offset	102	2	1	0.4	-0.2	0	0.7	6.2
4	LL3_Deck Offset	103	0	1	0.4	-0.2	0	0.7	6.2
5	LL3_Deck Offset	103	1	1	0.4	-0.2	0	-0.9	9
6	LL3_Deck Offset	103	2	1	0.4	-0.2	0	-2.5	11.8
7	LL3_Deck Offset	104	0	1	0.4	-0.2	0	-2.5	11.8
8	LL3_Deck Offset	104	1	1	0.4	-0.2	0	-3	12.5
9	LL3_Deck Offset	104	2	1	0.4	-0.2	0	-3.5	13.3
10	LL3_Deck Offset	106	0	15.7	0.7	-0.3	0.3	4.2	14.4
11	LL3_Deck Offset	106	1	15.7	0.7	-0.3	0.3	3.9	15.1
12	LL3_Deck Offset	106	2	15.7	0.7	-0.3	0.3	3.5	15.7
13	LL3_Deck Offset	107	0	15.7	0.7	-0.4	0.3	3.5	15.7
14	LL3_Deck Offset	107	1	15.7	0.7	-0.4	0.3	1.6	19.4
15	LL3_Deck Offset	107	2	15.7	0.7	-0.4	0.3	-0.3	23.1
16	LL3_Deck Offset	108	0	15.7	0.7	-0.3	0.3	-0.3	23.1
17	LL3_Deck Offset	108	1	15.7	0.7	-0.3	0.3	-2.1	26.6
18	LL3_Deck Offset	108	2	15.7	0.7	-0.3	0.3	-3.9	30.2
19	LL3_Deck Offset	109	0	15.7	0.7	-0.4	0.3	-3.9	30.2
20	LL3_Deck Offset	109	1	15.7	0.7	-0.4	0.3	-4.5	31.4
21	LL3_Deck Offset	109	2	15.7	0.7	-0.4	0.3	-5.2	32.7
22	LL3_Deck Offset	111	0	24.9	1	-0.1	-0.3	0.6	33
23	LL3_Deck Offset	111	1	24.9	1	-0.1	-0.3	0.5	33.9
24	LL3_Deck Offset	111	2	24.9	1	-0.1	-0.3	0.4	34.9
25	LL3_Deck Offset	112	0	24.9	1	-0.1	-0.3	0.4	34.9
26	LL3_Deck Offset	112	1	24.9	1	-0.1	-0.3	-0.2	40.6
27	LL3_Deck Offset	112	2	24.9	1	-0.1	-0.3	-0.9	46.3
28	LL3_Deck Offset	113	0	24.9	1	-0.1	-0.3	-0.9	46.3
29	LL3_Deck Offset	113	1	24.9	1	-0.1	-0.3	-1.5	51.8
30	LL3_Deck Offset	113	2	24.9	1	-0.1	-0.3	-2	57.3
31	LL3_Deck Offset	114	0	24.9	1	-0.1	-0.3	-2	57.3
32	LL3_Deck Offset	114	1	24.9	1	-0.1	-0.3	-2.2	58.9
33	LL3_Deck Offset	114	2	24.9	1	-0.1	-0.3	-2.4	60.5
34	LL3_Deck Offset	116	0	27.4	1.4	0	-1.3	-0.7	60.5
35	LL3_Deck Offset	116	1	27.4	1.4	0	-1.3	-0.7	61.6
36	LL3_Deck Offset	116	2	27.4	1.4	0	-1.3	-0.7	62.7
37	LL3_Deck Offset	117	0	27.4	1.4	0	-1.4	-0.7	62.7
38	LL3_Deck Offset	117	1	27.4	1.4	0	-1.4	-0.6	71.1
39	LL3_Deck Offset	117	2	27.4	1.4	0	-1.4	-0.6	79.4
40	LL3_Deck Offset	118	0	27.4	1.4	0	-1.4	-0.6	79.4
41	LL3_Deck Offset	118	1	27.4	1.4	0	-1.4	-0.6	87.5
42	LL3_Deck Offset	118	2	27.4	1.4	0	-1.4	-0.5	95.6
43	LL3_Deck Offset	119	0	27.4	1.4	0	-1.5	-0.5	95.6
44	LL3_Deck Offset	119	1	27.4	1.4	0	-1.5	-0.5	97.3
45	LL3_Deck Offset	119	2	27.4	1.4	0	-1.5	-0.5	99
46	LL3_Deck Offset	121	0	20.1	1.8	0	-2.5	-1.4	99.7
47	LL3_Deck Offset	121	1	20.1	1.8	0	-2.5	-1.4	101.2
48	LL3_Deck Offset	121	2	20.1	1.8	0	-2.5	-1.3	102.7
49	LL3_Deck Offset	122	0	20.1	1.8	0.1	-2.4	-1.3	102.7
50	LL3_Deck Offset	122	1	20.1	1.8	0.1	-2.4	-1	113.5
51	LL3_Deck Offset	122	2	20.1	1.8	0.1	-2.4	-0.7	124.2
52	LL3_Deck Offset	123	0	20.1	1.8	0.1	-2.4	-0.7	124.2
53	LL3_Deck Offset	123	1	20.1	1.8	0.1	-2.4	-0.4	135
54	LL3_Deck Offset	123	2	20.1	1.8	0.1	-2.4	-0.1	145.7
55	LL3_Deck Offset	124	0	20.1	1.8	0	-2.5	-0.1	145.7
56	LL3_Deck Offset	124	1	20.1	1.8	0	-2.5	-0.1	147.1
57	LL3_Deck Offset	124	2	20.1	1.8	0	-2.5	0	148.4
58	LL3_Deck Offset	126	0	6.1	2.2	0.2	-3.8	-3	151.6
59	LL3_Deck Offset	126	1	6.1	2.2	0.2	-3.8	-2.7	154.7
60	LL3_Deck Offset	126	2	6.1	2.2	0.2	-3.8	-2.5	157.7
61	LL3_Deck Offset	127	0	6.1	2.2	0.2	-3.7	-2.5	157.7
62	LL3_Deck Offset	127	1	6.1	2.2	0.2	-3.7	-1.4	169.2
63	LL3_Deck Offset	127	2	6.1	2.2	0.2	-3.7	-0.4	180.6
64	LL3_Deck Offset	128	0	6.1	2.2	0.2	-3.7	-0.4	180.6
65	LL3_Deck Offset	128	1	6.1	2.2	0.2	-3.7	0.6	192.2
66	LL3_Deck Offset	128	2	6.1	2.2	0.2	-3.7	1.6	203.7

Load (Row) Number	User's Load ID	Member ID	Joint ID	Fx (kips)	Fy (kips)	Fz (kips)	Mx (ft*kip)	My (ft*kip)	Mz (ft*kip)
1	LL3_Roof	102	0	0.2	0	0	0	0.9	0
2	LL3_Roof	102	1	0.2	0	0	0	0.5	0
3	LL3_Roof	102	2	0.2	0	0	0	0.2	0
4	LL3_Roof	103	0	0.2	0	0	0	0.2	0
5	LL3_Roof	103	1	0.2	0	0	0	-0.2	0
6	LL3_Roof	103	2	0.2	0	0	0	-0.5	0
7	LL3_Roof	104	0	0.2	0	0	0	-0.5	0
8	LL3_Roof	104	1	0.2	0	0	0	-0.6	0
9	LL3_Roof	104	2	0.2	0	0	0	-0.7	0
10	LL3_Roof	106	0	3.2	0	-0.1	0	0.8	0
11	LL3_Roof	106	1	3.2	0	-0.1	0	0.8	0
12	LL3_Roof	106	2	3.2	0	-0.1	0	0.7	0
13	LL3_Roof	107	0	3.2	0	-0.1	0	0.7	0
14	LL3_Roof	107	1	3.2	0	-0.1	0	0.3	0
15	LL3_Roof	107	2	3.2	0	-0.1	0	-0.1	0
16	LL3_Roof	108	0	3.2	0	-0.1	0	-0.1	0
17	LL3_Roof	108	1	3.2	0	-0.1	0	-0.4	0
18	LL3_Roof	108	2	3.2	0	-0.1	0	-0.8	0
19	LL3_Roof	109	0	3.2	0	-0.1	0	-0.8	0
20	LL3_Roof	109	1	3.2	0	-0.1	0	-0.9	0
21	LL3_Roof	109	2	3.2	0	-0.1	0	-1.1	0
22	LL3_Roof	111	0	4.9	0	0	0	0.1	0
23	LL3_Roof	111	1	4.9	0	0	0	0.1	0
24	LL3_Roof	111	2	4.9	0	0	0	0	0
25	LL3_Roof	112	0	4.9	0	0	0	0	0
26	LL3_Roof	112	1	4.9	0	0	0	-0.1	0
27	LL3_Roof	112	2	4.9	0	0	0	-0.2	-0.1
28	LL3_Roof	113	0	4.9	0	0	0	-0.2	-0.1
29	LL3_Roof	113	1	4.9	0	0	0	-0.3	-0.1
30	LL3_Roof	113	2	4.9	0	0	0	-0.4	-0.1
31	LL3_Roof	114	0	4.9	0	0	0	-0.4	-0.1
32	LL3_Roof	114	1	4.9	0	0	0	-0.4	-0.1
33	LL3_Roof	114	2	4.9	0	0	0	-0.5	-0.1
34	LL3_Roof	116	0	5.1	0	0	0	-0.2	-0.1
35	LL3_Roof	116	1	5.1	0	0	0	-0.2	-0.1
36	LL3_Roof	116	2	5.1	0	0	0	-0.2	-0.1
37	LL3_Roof	117	0	5.1	0	0	0	-0.2	-0.1
38	LL3_Roof	117	1	5.1	0	0	0	-0.2	-0.1
39	LL3_Roof	117	2	5.1	0	0	0	-0.1	-0.1
40	LL3_Roof	118	0	5.1	0	0	0	-0.1	-0.1
41	LL3_Roof	118	1	5.1	0	0	0	-0.1	-0.1
42	LL3_Roof	118	2	5.1	0	0	0	0	-0.1
43	LL3_Roof	119	0	5.1	0	0	0	0	-0.1
44	LL3_Roof	119	1	5.1	0	0	0	0	-0.1
45	LL3_Roof	119	2	5.1	0	0	0	0	-0.1
46	LL3_Roof	121	0	2.8	0	0	0	-0.4	-0.1
47	LL3_Roof	121	1	2.8	0	0	0	-0.4	-0.1
48	LL3_Roof	121	2	2.8	0	0	0	-0.4	-0.1
49	LL3_Roof	122	0	2.8	0	0	0	-0.4	-0.1
50	LL3_Roof	122	1	2.8	0	0	0	-0.2	-0.1
51	LL3_Roof	122	2	2.8	0	0	0	-0.1	-0.1
52	LL3_Roof	123	0	2.8	0	0	0	-0.1	-0.1
53	LL3_Roof	123	1	2.8	0	0	0	0	-0.1
54	LL3_Roof	123	2	2.8	0	0	0	0.1	-0.1
55	LL3_Roof	124	0	2.8	0	0	0	0.1	-0.1
56	LL3_Roof	124	1	2.8	0	0	0	0.1	-0.1
57	LL3_Roof	124	2	2.8	0	0	0	0.1	-0.1
58	LL3_Roof	126	0	-1.3	0	0	0	-0.6	-0.1
59	LL3_Roof	126	1	-1.3	0	0	0	-0.6	-0.1
60	LL3_Roof	126	2	-1.3	0	0	0	-0.5	-0.1
61	LL3_Roof	127	0	-1.3	0	0	0	-0.5	-0.1
62	LL3_Roof	127	1	-1.3	0	0	0	-0.4	-0.1
63	LL3_Roof	127	2	-1.3	0	0	0	-0.2	-0.1
64	LL3_Roof	128	0	-1.3	0	0	0	-0.2	-0.1
65	LL3_Roof	128	1	-1.3	0	0	0	-0.1	-0.1
66	LL3_Roof	128	2	-1.3	0	0	0	0.1	-0.1

Load (Row) Number	User's Load ID	Member ID	Joint ID	Fx (kips)	Fy (kips)	Fz (kips)	Mx (ft*kip)	My (ft*kip)	Mz (ft*kip)
1	TU-	102	0	5.4	0	-1.4	0	24.6	0
2	TU-	102	1	5.4	0	-1.4	0	14.4	0
3	TU-	102	2	5.4	0	-1.4	0	4.3	0
4	TU-	103	0	5.4	0	-1.4	0	4.3	0
5	TU-	103	1	5.4	0	-1.4	0	-5.7	0
6	TU-	103	2	5.4	0	-1.4	0	-15.7	0
7	TU-	104	0	5.4	0	-1.4	0	-15.7	0
8	TU-	104	1	5.4	0	-1.4	0	-18.5	0.1
9	TU-	104	2	5.4	0	-1.4	0	-21.3	0.1
10	TU-	106	0	66.5	0	-1.2	0	12.3	0.1
11	TU-	106	1	66.5	0	-1.2	0	11.2	0.1
12	TU-	106	2	66.5	0	-1.2	0	10	0.1
13	TU-	107	0	66.5	0	-1.3	0	10	0.1
14	TU-	107	1	66.5	0	-1.3	0	3.1	0.1
15	TU-	107	2	66.5	0	-1.3	0	-3.9	0.1
16	TU-	108	0	66.5	0	-1.3	0	-3.9	0.1
17	TU-	108	1	66.5	0	-1.3	0	-10.4	0.1
18	TU-	108	2	66.5	0	-1.3	0	-17	0.1
19	TU-	109	0	66.5	0	-1.3	0	-17	0.1
20	TU-	109	1	66.5	0	-1.3	0	-19.4	0.1
21	TU-	109	2	66.5	0	-1.3	0	-21.8	0.1
22	TU-	111	0	81.6	0	0.2	0	-6.7	0.1
23	TU-	111	1	81.6	0	0.2	0	-6.5	0.1
24	TU-	111	2	81.6	0	0.2	0	-6.4	0.1
25	TU-	112	0	81.6	0	0.1	0	-6.4	0.1
26	TU-	112	1	81.6	0	0.1	0	-5.7	0.1
27	TU-	112	2	81.6	0	0.1	0	-5.1	0.1
28	TU-	113	0	81.6	0	0.1	0	-5.1	0.1
29	TU-	113	1	81.6	0	0.1	0	-4.3	0.1
30	TU-	113	2	81.6	0	0.1	0	-3.5	0.2
31	TU-	114	0	81.6	0	0.1	0	-3.5	0.2
32	TU-	114	1	81.6	0	0.1	0	-3.4	0.2
33	TU-	114	2	81.6	0	0.1	0	-3.3	0.2
34	TU-	116	0	51.5	0	0.7	0	-11	0.2
35	TU-	116	1	51.5	0	0.7	0	-10.5	0.2
36	TU-	116	2	51.5	0	0.7	0	-9.9	0.2
37	TU-	117	0	51.5	0	0.7	0	-9.9	0.2
38	TU-	117	1	51.5	0	0.7	0	-6.1	0.2
39	TU-	117	2	51.5	0	0.7	0	-2.3	0.2
40	TU-	118	0	51.5	0	0.7	0	-2.3	0.2
41	TU-	118	1	51.5	0	0.7	0	1.5	0.2
42	TU-	118	2	51.5	0	0.7	0	5.3	0.2
43	TU-	119	0	51.5	0	0.6	0	5.3	0.2
44	TU-	119	1	51.5	0	0.6	0	6.1	0.2
45	TU-	119	2	51.5	0	0.6	0	6.8	0.2
46	TU-	121	0	-48.8	0	1.4	0	-18.8	0.2
47	TU-	121	1	-48.8	0	1.4	0	-17.6	0.2
48	TU-	121	2	-48.8	0	1.4	0	-16.5	0.3
49	TU-	122	0	-48.8	0	1.3	0	-16.5	0.3
50	TU-	122	1	-48.8	0	1.3	0	-8.6	0.3
51	TU-	122	2	-48.8	0	1.3	0	-0.7	0.3
52	TU-	123	0	-48.8	0	1.3	0	-0.7	0.3
53	TU-	123	1	-48.8	0	1.3	0	7.2	0.3
54	TU-	123	2	-48.8	0	1.3	0	15.1	0.3
55	TU-	124	0	-48.8	0	1.4	0	15.1	0.3
56	TU-	124	1	-48.8	0	1.4	0	16.1	0.3
57	TU-	124	2	-48.8	0	1.4	0	17.1	0.3
58	TU-	126	0	-332.2	0	3.2	0	-38.2	0.3
59	TU-	126	1	-332.2	0	3.2	0	-33.7	0.3
60	TU-	126	2	-332.2	0	3.2	0	-29.3	0.3
61	TU-	127	0	-332.2	0	3	0	-29.3	0.3
62	TU-	127	1	-332.2	0	3	0	-13.7	0.4
63	TU-	127	2	-332.2	0	3	0	1.9	0.4
64	TU-	128	0	-332.2	0	3	0	1.9	0.4
65	TU-	128	1	-332.2	0	3	0	17.9	0.4
66	TU-	128	2	-332.2	0	3	0	33.9	0.4

Load (Row) Number	User's Load ID	Member ID	Joint ID	Fx (kips)	Fy (kips)	Fz (kips)	Mx (ft*kip)	My (ft*kip)	Mz (ft*kip)
1	TU+	102	0	-5.4	0	1.4	0	-24.6	0
2	TU+	102	1	-5.4	0	1.4	0	-14.4	0
3	TU+	102	2	-5.4	0	1.4	0	-4.3	0
4	TU+	103	0	-5.4	0	1.4	0	-4.3	0
5	TU+	103	1	-5.4	0	1.4	0	5.7	0
6	TU+	103	2	-5.4	0	1.4	0	15.7	0
7	TU+	104	0	-5.4	0	1.4	0	15.7	0
8	TU+	104	1	-5.4	0	1.4	0	18.5	-0.1
9	TU+	104	2	-5.4	0	1.4	0	21.3	-0.1
10	TU+	106	0	-66.5	0	1.2	0	-12.3	-0.1
11	TU+	106	1	-66.5	0	1.2	0	-11.2	-0.1
12	TU+	106	2	-66.5	0	1.2	0	-10	-0.1
13	TU+	107	0	-66.5	0	1.3	0	-10	-0.1
14	TU+	107	1	-66.5	0	1.3	0	-3.1	-0.1
15	TU+	107	2	-66.5	0	1.3	0	3.9	-0.1
16	TU+	108	0	-66.5	0	1.3	0	3.9	-0.1
17	TU+	108	1	-66.5	0	1.3	0	10.4	-0.1
18	TU+	108	2	-66.5	0	1.3	0	17	-0.1
19	TU+	109	0	-66.5	0	1.3	0	17	-0.1
20	TU+	109	1	-66.5	0	1.3	0	19.4	-0.1
21	TU+	109	2	-66.5	0	1.3	0	21.8	-0.1
22	TU+	111	0	-81.6	0	-0.2	0	6.7	-0.1
23	TU+	111	1	-81.6	0	-0.2	0	6.5	-0.1
24	TU+	111	2	-81.6	0	-0.2	0	6.4	-0.1
25	TU+	112	0	-81.6	0	-0.1	0	6.4	-0.1
26	TU+	112	1	-81.6	0	-0.1	0	5.7	-0.1
27	TU+	112	2	-81.6	0	-0.1	0	5.1	-0.1
28	TU+	113	0	-81.6	0	-0.1	0	5.1	-0.1
29	TU+	113	1	-81.6	0	-0.1	0	4.3	-0.1
30	TU+	113	2	-81.6	0	-0.1	0	3.5	-0.2
31	TU+	114	0	-81.6	0	-0.1	0	3.5	-0.2
32	TU+	114	1	-81.6	0	-0.1	0	3.4	-0.2
33	TU+	114	2	-81.6	0	-0.1	0	3.3	-0.2
34	TU+	116	0	-51.5	0	-0.7	0	11	-0.2
35	TU+	116	1	-51.5	0	-0.7	0	10.5	-0.2
36	TU+	116	2	-51.5	0	-0.7	0	9.9	-0.2
37	TU+	117	0	-51.5	0	-0.7	0	9.9	-0.2
38	TU+	117	1	-51.5	0	-0.7	0	6.1	-0.2
39	TU+	117	2	-51.5	0	-0.7	0	2.3	-0.2
40	TU+	118	0	-51.5	0	-0.7	0	2.3	-0.2
41	TU+	118	1	-51.5	0	-0.7	0	-1.5	-0.2
42	TU+	118	2	-51.5	0	-0.7	0	-5.3	-0.2
43	TU+	119	0	-51.5	0	-0.6	0	-5.3	-0.2
44	TU+	119	1	-51.5	0	-0.6	0	-6.1	-0.2
45	TU+	119	2	-51.5	0	-0.6	0	-6.8	-0.2
46	TU+	121	0	48.8	0	-1.4	0	18.8	-0.2
47	TU+	121	1	48.8	0	-1.4	0	17.6	-0.2
48	TU+	121	2	48.8	0	-1.4	0	16.5	-0.3
49	TU+	122	0	48.8	0	-1.3	0	16.5	-0.3
50	TU+	122	1	48.8	0	-1.3	0	8.6	-0.3
51	TU+	122	2	48.8	0	-1.3	0	0.7	-0.3
52	TU+	123	0	48.8	0	-1.3	0	0.7	-0.3
53	TU+	123	1	48.8	0	-1.3	0	-7.2	-0.3
54	TU+	123	2	48.8	0	-1.3	0	-15.1	-0.3
55	TU+	124	0	48.8	0	-1.4	0	-15.1	-0.3
56	TU+	124	1	48.8	0	-1.4	0	-16.1	-0.3
57	TU+	124	2	48.8	0	-1.4	0	-17.1	-0.3
58	TU+	126	0	332.2	0	-3.2	0	38.2	-0.3
59	TU+	126	1	332.2	0	-3.2	0	33.7	-0.3
60	TU+	126	2	332.2	0	-3.2	0	29.3	-0.3
61	TU+	127	0	332.2	0	-3	0	29.3	-0.3
62	TU+	127	1	332.2	0	-3	0	13.7	-0.4
63	TU+	127	2	332.2	0	-3	0	-1.9	-0.4
64	TU+	128	0	332.2	0	-3	0	-1.9	-0.4
65	TU+	128	1	332.2	0	-3	0	-17.9	-0.4
66	TU+	128	2	332.2	0	-3	0	-33.9	-0.4

Load (Row) Number	User's Load ID	Member ID	Joint ID	Fx (kips)	Fy (kips)	Fz (kips)	Mx (ft*kip)	My (ft*kip)	Mz (ft*kip)
1	TU+Temp. Diff.	102	0	-12.6	0	2.9	0	-52.8	0
2	TU+Temp. Diff.	102	1	-12.6	0	2.9	0	-31	0
3	TU+Temp. Diff.	102	2	-12.6	0	2.9	0	-9.1	-0.1
4	TU+Temp. Diff.	103	0	-12.6	0	2.9	0	-9.1	-0.1
5	TU+Temp. Diff.	103	1	-12.6	0	2.9	0	12.4	-0.1
6	TU+Temp. Diff.	103	2	-12.6	0	2.9	0	34	-0.1
7	TU+Temp. Diff.	104	0	-12.6	0	2.9	0	34	-0.1
8	TU+Temp. Diff.	104	1	-12.6	0	2.9	0	39.9	-0.1
9	TU+Temp. Diff.	104	2	-12.6	0	2.9	0	45.9	-0.1
10	TU+Temp. Diff.	106	0	-122.9	0	2.2	0	-21.1	-0.1
11	TU+Temp. Diff.	106	1	-122.9	0	2.2	0	-19	-0.1
12	TU+Temp. Diff.	106	2	-122.9	0	2.2	0	-16.9	-0.1
13	TU+Temp. Diff.	107	0	-122.9	0	2.3	0	-16.9	-0.1
14	TU+Temp. Diff.	107	1	-122.9	0	2.3	0	-4.5	-0.1
15	TU+Temp. Diff.	107	2	-122.9	0	2.3	0	7.8	-0.2
16	TU+Temp. Diff.	108	0	-122.9	0	2.3	0	7.8	-0.2
17	TU+Temp. Diff.	108	1	-122.9	0	2.3	0	19.5	-0.2
18	TU+Temp. Diff.	108	2	-122.9	0	2.3	0	31.3	-0.2
19	TU+Temp. Diff.	109	0	-122.9	0	2.3	0	31.3	-0.2
20	TU+Temp. Diff.	109	1	-122.9	0	2.3	0	35.5	-0.2
21	TU+Temp. Diff.	109	2	-122.9	0	2.3	0	39.8	-0.2
22	TU+Temp. Diff.	111	0	-128.4	0	-0.7	0	17.3	-0.2
23	TU+Temp. Diff.	111	1	-128.4	0	-0.7	0	16.6	-0.2
24	TU+Temp. Diff.	111	2	-128.4	0	-0.7	0	15.9	-0.2
25	TU+Temp. Diff.	112	0	-128.4	0	-0.6	0	15.9	-0.2
26	TU+Temp. Diff.	112	1	-128.4	0	-0.6	0	12.6	-0.2
27	TU+Temp. Diff.	112	2	-128.4	0	-0.6	0	9.3	-0.3
28	TU+Temp. Diff.	113	0	-128.4	0	-0.6	0	9.3	-0.3
29	TU+Temp. Diff.	113	1	-128.4	0	-0.6	0	5.8	-0.3
30	TU+Temp. Diff.	113	2	-128.4	0	-0.6	0	2.4	-0.3
31	TU+Temp. Diff.	114	0	-128.4	0	-0.6	0	2.4	-0.3
32	TU+Temp. Diff.	114	1	-128.4	0	-0.6	0	1.5	-0.3
33	TU+Temp. Diff.	114	2	-128.4	0	-0.6	0	0.7	-0.3
34	TU+Temp. Diff.	116	0	-39.3	0	-1.5	0	23	-0.3
35	TU+Temp. Diff.	116	1	-39.3	0	-1.5	0	21.8	-0.3
36	TU+Temp. Diff.	116	2	-39.3	0	-1.5	0	20.6	-0.3
37	TU+Temp. Diff.	117	0	-39.3	0	-1.5	0	20.6	-0.3
38	TU+Temp. Diff.	117	1	-39.3	0	-1.5	0	11.9	-0.4
39	TU+Temp. Diff.	117	2	-39.3	0	-1.5	0	3.2	-0.4
40	TU+Temp. Diff.	118	0	-39.3	0	-1.5	0	3.2	-0.4
41	TU+Temp. Diff.	118	1	-39.3	0	-1.5	0	-5.3	-0.4
42	TU+Temp. Diff.	118	2	-39.3	0	-1.5	0	-13.9	-0.4
43	TU+Temp. Diff.	119	0	-39.3	0	-1.5	0	-13.9	-0.4
44	TU+Temp. Diff.	119	1	-39.3	0	-1.5	0	-15.6	-0.4
45	TU+Temp. Diff.	119	2	-39.3	0	-1.5	0	-17.4	-0.4
46	TU+Temp. Diff.	121	0	162.4	0	-2	0	29.1	-0.4
47	TU+Temp. Diff.	121	1	162.4	0	-2	0	27.4	-0.5
48	TU+Temp. Diff.	121	2	162.4	0	-2	0	25.6	-0.5
49	TU+Temp. Diff.	122	0	162.4	0	-2	0	25.6	-0.5
50	TU+Temp. Diff.	122	1	162.4	0	-2	0	14	-0.5
51	TU+Temp. Diff.	122	2	162.4	0	-2	0	2.5	-0.5
52	TU+Temp. Diff.	123	0	162.4	0	-2	0	2.5	-0.5
53	TU+Temp. Diff.	123	1	162.4	0	-2	0	-9.1	-0.6
54	TU+Temp. Diff.	123	2	162.4	0	-2	0	-20.7	-0.6
55	TU+Temp. Diff.	124	0	162.4	0	-2	0	-20.7	-0.6
56	TU+Temp. Diff.	124	1	162.4	0	-2	0	-22.2	-0.6
57	TU+Temp. Diff.	124	2	162.4	0	-2	0	-23.7	-0.6
58	TU+Temp. Diff.	126	0	565.2	0	-5.6	0	64.9	-0.6
59	TU+Temp. Diff.	126	1	565.2	0	-5.6	0	57	-0.6
60	TU+Temp. Diff.	126	2	565.2	0	-5.6	0	49.1	-0.6
61	TU+Temp. Diff.	127	0	565.2	0	-5.3	0	49.1	-0.6
62	TU+Temp. Diff.	127	1	565.2	0	-5.3	0	21.4	-0.7
63	TU+Temp. Diff.	127	2	565.2	0	-5.3	0	-6.4	-0.7
64	TU+Temp. Diff.	128	0	565.2	0	-5.3	0	-6.4	-0.7
65	TU+Temp. Diff.	128	1	565.2	0	-5.3	0	-34.8	-0.7
66	TU+Temp. Diff.	128	2	565.2	0	-5.3	0	-63.3	-0.8

PT Column: AASHTO LRFD Column Analysis
Figg Bridge Engineers, Inc.
Short Column Analysis - Individual Load Cases
File Name: MS_Canopy_STRI_No PT Axial.ptc

Short Column Analysis - Individual Load Case Results

Load No.	Cross Section ID	Pu (kips)	Mux (ft*kip)	Muy (ft*kip)	Mu (ft*kip)	ϕMn (ft*kip)	ϕMn/Mu
1	MS_Canopy	-1253.8	246.7	-2.3	246.7	1230.2	4.986
2	MS_Canopy	-569.8	182.6	511.0	542.6	3924.4	7.232
3	MS_Canopy	1859.1	-391.9	-0.1	391.9	1681.3	4.290
4	MS_Canopy	-252.1	-86.0	-546.0	552.7	8207.9	14.850
5	MS_Canopy	-234.2	786.5	-0.1	786.5	1490.3	1.895
6	MS_Canopy	-484.9	-278.0	1555.0	1579.7	7227.1	4.575
7	MS_Canopy	-234.2	786.5	-0.1	786.5	1490.3	1.895
8	MS_Canopy	-484.9	-278.0	1555.0	1579.7	7227.1	4.575
9	MS_Canopy	-1067.3	-443.0	1553.9	1615.8	4491.9	2.780
10	MS_Canopy	3252.4	169.2	0.8	169.2	1718.1	10.154
11	MS_Canopy	-201.2	527.0	-38.8	528.4	1499.5	2.838
12	MS_Canopy	-157.6	-443.5	0.1	443.5	1507.3	3.399
13	MS_Canopy	-409.1	87.2	264.1	278.1	4290.7	15.427
14	MS_Canopy	-1083.6	-476.6	1.3	476.6	1309.8	2.748
15	MS_Canopy	2496.4	110.1	-1099.4	1104.9	12223.4	11.063
16	MS_Canopy	819.9	0.0	-0.8	0.8	23606.0	29507.440
17	MS_Canopy	-258.8	226.6	0.0	226.6	1485.1	6.554

MIN C/D = 1.89

Section ID: MS_Canopy

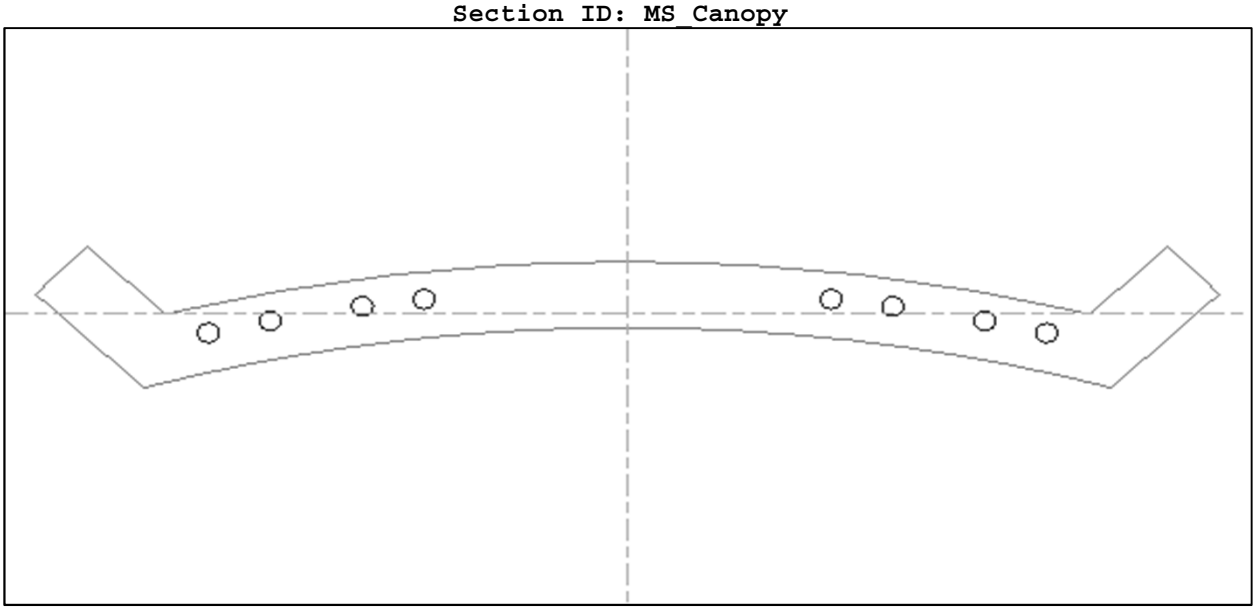

Material Properties

f'c (ksi)	8.5	Strain @ Ult.	0.003
f''c (ksi)	7.12	Strain @ Max.	0.0024
fy (ksi)	60	E Conc. (ksi)	4781
fr (ksi)	0.7	E Rebar (ksi)	29000
Tendon fpu (ksi)	270	E Tendon (ksi)	28500
PT Bar fpu (ksi)	150	E PT Bar (ksi)	29000
Gamma	0.15		

Section Properties

Ix (in^4)	55127	Iy (in^4)	7277555
Y top (in)	12.1712	X lft (in)	96
Y bot (in)	13.4389	X rgt (in)	96
Area (in^2)	2357.85	Ixy (in^4)	0

Cross Section Coordinates

** Exterior Boundary Coordinates **

Point No.	X (in)	Y (in)	Point No.	X (in)	Y (in)
1	-96	3.55	2	-87.65	12.17
3	-75	-0.08	4	75	-0.08
5	87.65	12.17	6	96	3.55
7	78.45	-13.44	8	10.5	-2.74
9	-10.5	-2.74	10	-78.45	-13.44

Tendon Information

Tendon No.	X (in)	Y (in)	Dia. (in)	Area (in^2)	Fsi (ksi)
1	-33	2.6	3.5	2.6	216
2	-43	1.3	3.5	2.6	216
3	-58	-1.31	3.5	2.6	216
4	-68	-3.49	3.5	2.6	216
5	33	2.6	3.5	2.6	216
6	43	1.3	3.5	2.6	216
7	58	-1.31	3.5	2.6	216
8	68	-3.49	3.5	2.6	216

AASHTO Limit State: STR 1 - STRENGTH I

Max/ Min ID	Load Num	Member Num	Joint Num	Limit State/ Combo ID	Fx (kips)	Fy (kips)	Fz (kips)	Mx (ft*kip)	My (ft*kip)	Mz (ft*kip)	Mxy (ft*kip)	Mxz (ft*kip)	Myz (ft*kip)
Max Fx	1	133	0	STR 1/ 47	948.1	0.0	30.8	0.0	-262.5	-4.1	262.5	4.1	262.5
Max Fy	46	152	0	STR 1/ 9	-268.9	8.2	10.0	-23.9	66.6	-284.6	70.8	285.6	292.3
Max Fz	10	137	0	STR 1/ 49	-325.4	0.0	79.0	-0.1	-370.9	-4.9	370.9	4.9	370.9
Max Mx	1	133	0	STR 1/ 7	314.7	-33.6	28.8	15.8	-239.1	1346.8	239.6	1346.9	1367.8
Max My	21	140	2	STR 1/ 48	-550.8	0.0	28.7	-0.1	282.9	-5.7	282.9	5.7	282.9
Max Mz	1	133	0	STR 1/ 61	257.9	-33.6	14.5	15.8	-159.9	1348.2	160.6	1348.3	1357.7
Max Mxy	10	137	0	STR 1/ 46	-291.3	0.0	77.4	-0.1	-373.0	-5.1	373.0	5.1	373.0
Max Mxz	1	133	0	STR 1/ 61	257.9	-33.6	14.5	15.8	-159.9	1348.2	160.6	1348.3	1357.7
Max Myz	1	133	0	STR 1/ 25	743.5	-33.6	33.1	15.8	-293.5	1345.9	293.9	1346.0	1377.5
Min Fx	33	145	2	STR 1/ 129	-759.3	0.0	-10.3	-0.1	153.9	-3.8	153.9	3.8	153.9
Min Fy	1	133	0	STR 1/ 7	314.7	-33.6	28.8	15.8	-239.1	1346.8	239.6	1346.9	1367.8
Min Fz	57	155	2	STR 1/ 156	-356.8	0.0	-58.4	-0.1	-140.9	-1.6	140.9	1.6	140.9
Min Mx	55	155	0	STR 1/ 9	-165.2	8.2	-35.2	-24.5	-40.2	-197.7	47.0	199.2	201.7
Min My	10	137	0	STR 1/ 46	-291.3	0.0	77.4	-0.1	-373.0	-5.1	373.0	5.1	373.0
Min Mz	34	147	0	STR 1/ 54	-518.3	3.3	49.0	-20.8	-96.5	-319.2	98.7	319.8	333.4
Min Mxy	15	138	2	STR 1/ 165	-394.1	0.0	37.8	-0.1	0.0	-3.9	0.1	3.9	3.9
Min Mxz	65	159	1	STR 1/ 56	217.9	0.0	-3.1	-0.1	267.3	0.0	267.3	0.1	267.3
Min Myz	57	155	2	STR 1/ 166	-98.6	0.0	-22.7	-0.1	0.4	-0.6	0.4	0.6	0.7

Limit State: STRENGTH I

FR Friction
LF: 1
FR1: CR+SH+PT_EOC
FR2: CR+SH+PT_D10K

TU Uniform Temperature
LF: 0.5
TU1: TU-
TU2: TU+
TU3: TU+Temp. Diff.

DW DL Wearing Surfaces & Utilities
LF1: 1.5
LF2: 0.65
DW1: DW

LL Vehicular Live Load
LF: 1.75
LL1: LL1_Deck
LL2: LL2_Deck
LL3: LL3_Deck
LL4: LL1_Roof
LL5: LL2_Roof
LL6: LL3_Roof
LL7: LL1_Deck Offset
LL8: LL2_Deck Offset
LL9: LL3_Deck Offset

DC DL Structural Components & Attachments
LF1: 1.25
LF2: 0.9
DC1: DC

Load (Row) Number	User's Load ID	Member ID	Joint ID	Fx (kips)	Fy (kips)	Fz (kips)	Mx (ft*kip)	My (ft*kip)	Mz (ft*kip)
1	CR+SH+PT_D10K	133	0	292	0	-22.4	0	58.9	-1.2
2	CR+SH+PT_D10K	133	1	290.3	0	-4.9	0	30.5	-1.1
3	CR+SH+PT_D10K	133	2	289.5	0	-4.9	0	4.1	-1
4	CR+SH+PT_D10K	134	0	289.5	0	-5.2	0	4.1	-1
5	CR+SH+PT_D10K	134	1	288.6	0	-5.2	0	-23.4	-0.9
6	CR+SH+PT_D10K	134	2	289.2	0	-5.2	0	-50.9	-0.8
7	CR+SH+PT_D10K	135	0	289.2	0	-4	0	-50.9	-0.8
8	CR+SH+PT_D10K	135	1	290.1	0	-4	0	-56.8	-0.8
9	CR+SH+PT_D10K	135	2	171.6	0	-4	0	-50.8	-0.7
10	CR+SH+PT_D10K	137	0	427	0	16.9	0	-115.1	-0.7
11	CR+SH+PT_D10K	137	1	587.4	0	16.8	0	-119	-0.7
12	CR+SH+PT_D10K	137	2	585.4	0	16.8	0	-106.7	-0.7
13	CR+SH+PT_D10K	138	0	585.4	0	15.6	0	-106.7	-0.7
14	CR+SH+PT_D10K	138	1	583.3	0	15.6	0	-73	-0.7
15	CR+SH+PT_D10K	138	2	582.9	0	15.6	0	-39.4	-0.6
16	CR+SH+PT_D10K	139	0	582.9	0	16.8	0	-39.4	-0.6
17	CR+SH+PT_D10K	139	1	582.5	0	16.8	0	-0.8	-0.6
18	CR+SH+PT_D10K	139	2	583.9	0	16.8	0	37.7	-0.6
19	CR+SH+PT_D10K	140	0	583.9	0	12.5	0	37.7	-0.6
20	CR+SH+PT_D10K	140	1	585.6	0	12.5	0	45.2	-0.6
21	CR+SH+PT_D10K	140	2	425.8	0	12.2	0	68.8	-0.6
22	CR+SH+PT_D10K	142	0	417.6	0	21.2	0	-122.6	-0.5
23	CR+SH+PT_D10K	142	1	586.1	0	21.2	0	-117.8	-0.5
24	CR+SH+PT_D10K	142	2	584.2	0	21.2	0	-96.1	-0.5
25	CR+SH+PT_D10K	143	0	584.2	0	19.9	0	-96.1	-0.5
26	CR+SH+PT_D10K	143	1	582.2	0	19.9	0	-54.8	-0.5
27	CR+SH+PT_D10K	143	2	582	0	19.9	0	-13.8	-0.5
28	CR+SH+PT_D10K	144	0	582	0	21.4	0	-13.8	-0.5
29	CR+SH+PT_D10K	144	1	581.7	0	21.4	0	34.2	-0.4
30	CR+SH+PT_D10K	144	2	583.1	0	21.4	0	82	-0.4
31	CR+SH+PT_D10K	145	0	583.1	0	16.1	0	82	-0.4
32	CR+SH+PT_D10K	145	1	584.7	0	16.1	0	91.6	-0.4
33	CR+SH+PT_D10K	145	2	416.2	0	15.7	0	118.1	-0.4
34	CR+SH+PT_D10K	147	0	344.2	0	27.2	0	-136.7	-0.3
35	CR+SH+PT_D10K	147	1	517.9	0	27.1	0	-123.6	-0.3
36	CR+SH+PT_D10K	147	2	516	0	27.1	0	-93.1	-0.3
37	CR+SH+PT_D10K	148	0	516	0	25.7	0	-93.1	-0.3
38	CR+SH+PT_D10K	148	1	514	0	25.7	0	-41.3	-0.3
39	CR+SH+PT_D10K	148	2	513.7	0	25.7	0	10.3	-0.3
40	CR+SH+PT_D10K	149	0	513.7	0	27.4	0	10.3	-0.3
41	CR+SH+PT_D10K	149	1	513.4	0	27.4	0	69.9	-0.3
42	CR+SH+PT_D10K	149	2	514.7	0	27.4	0	129.3	-0.2
43	CR+SH+PT_D10K	150	0	514.7	0	22.1	0	129.3	-0.2
44	CR+SH+PT_D10K	150	1	516.2	0	22.1	0	143.1	-0.2
45	CR+SH+PT_D10K	150	2	342.7	0	21.8	0	174.1	-0.2
46	CR+SH+PT_D10K	152	0	261.9	0	20.2	0	-71.7	-0.2
47	CR+SH+PT_D10K	152	1	435.8	0	20.2	0	-64.6	-0.2
48	CR+SH+PT_D10K	152	2	433.8	0	20.2	0	-40.3	-0.2
49	CR+SH+PT_D10K	153	0	433.8	0	18.6	0	-40.3	-0.2
50	CR+SH+PT_D10K	153	1	431.7	0	18.6	0	-4	-0.2
51	CR+SH+PT_D10K	153	2	431.4	0	18.6	0	32.1	-0.1
52	CR+SH+PT_D10K	154	0	431.4	0	20.6	0	32.1	-0.1
53	CR+SH+PT_D10K	154	1	431	0	20.6	0	76	-0.1
54	CR+SH+PT_D10K	154	2	432.4	0	20.6	0	119.6	-0.1
55	CR+SH+PT_D10K	155	0	432.4	0	14.6	0	119.6	-0.1
56	CR+SH+PT_D10K	155	1	433.9	0	14.6	0	128.9	-0.1
57	CR+SH+PT_D10K	155	2	260.2	0	14.3	0	155.3	-0.1
58	CR+SH+PT_D10K	157	0	216.4	0	-3	-0.1	-22.8	0
59	CR+SH+PT_D10K	157	1	379.6	0	4	-0.1	-38.8	0
60	CR+SH+PT_D10K	157	2	363.1	0	25.7	-0.1	-28.7	0
61	CR+SH+PT_D10K	158	0	363.1	0	24.3	-0.1	-28.7	0
62	CR+SH+PT_D10K	158	1	359.1	0	24.4	-0.1	70	0
63	CR+SH+PT_D10K	158	2	356.5	0	24.4	-0.1	168.4	0
64	CR+SH+PT_D10K	159	0	356.5	0	24.7	-0.1	168.4	0
65	CR+SH+PT_D10K	159	1	344.3	0	-4.1	-0.1	171.8	0
66	CR+SH+PT_D10K	159	2	340.7	0	-4.1	-0.1	155.1	0

Load (Row) Number	User's Load ID	Member ID	Joint ID	Fx (kips)	Fy (kips)	Fz (kips)	Mx (ft*kip)	My (ft*kip)	Mz (ft*kip)
1	CR+SH+PT_EOC	133	0	189.6	0	-21.7	0	42	-0.1
2	CR+SH+PT_EOC	133	1	188.6	0	-3.3	0	22.2	0
3	CR+SH+PT_EOC	133	2	188.1	0	-3.3	0	4.5	0
4	CR+SH+PT_EOC	134	0	188.1	0	-3.6	0	4.5	0
5	CR+SH+PT_EOC	134	1	187.6	0	-3.6	0	-14.5	0
6	CR+SH+PT_EOC	134	2	187.6	0	-3.6	0	-33.4	0
7	CR+SH+PT_EOC	135	0	187.6	0	-2.3	0	-33.4	0
8	CR+SH+PT_EOC	135	1	187.9	0	-2.3	0	-36.9	0.1
9	CR+SH+PT_EOC	135	2	120.9	0	-2.3	0	-33.9	0.1
10	CR+SH+PT_EOC	137	0	308.1	0	16	0	-105.9	0.1
11	CR+SH+PT_EOC	137	1	405	0	16	0	-103.5	0.1
12	CR+SH+PT_EOC	137	2	404.2	0	16	0	-92	0.1
13	CR+SH+PT_EOC	138	0	404.2	0	14.6	0	-92	0.1
14	CR+SH+PT_EOC	138	1	403.3	0	14.6	0	-60.5	0.1
15	CR+SH+PT_EOC	138	2	403.1	0	14.6	0	-29	0.1
16	CR+SH+PT_EOC	139	0	403.1	0	16	0	-29	0.1
17	CR+SH+PT_EOC	139	1	402.9	0	16	0	7.6	0.1
18	CR+SH+PT_EOC	139	2	403.3	0	16	0	44.2	0.1
19	CR+SH+PT_EOC	140	0	403.3	0	11.2	0	44.2	0.1
20	CR+SH+PT_EOC	140	1	404	0	11.2	0	51	0.1
21	CR+SH+PT_EOC	140	2	307.5	0	11.1	0	67	0.1
22	CR+SH+PT_EOC	142	0	307.9	0	17.8	0	-102.5	0.1
23	CR+SH+PT_EOC	142	1	410.1	0	17.8	0	-94.1	0.1
24	CR+SH+PT_EOC	142	2	409.3	0	17.8	0	-75.9	0.1
25	CR+SH+PT_EOC	143	0	409.3	0	16.4	0	-75.9	0.1
26	CR+SH+PT_EOC	143	1	408.5	0	16.4	0	-42	0.1
27	CR+SH+PT_EOC	143	2	408.4	0	16.4	0	-8.2	0.1
28	CR+SH+PT_EOC	144	0	408.4	0	18.1	0	-8.2	0.1
29	CR+SH+PT_EOC	144	1	408.2	0	18.1	0	32.3	0.1
30	CR+SH+PT_EOC	144	2	408.6	0	18.1	0	72.7	0.1
31	CR+SH+PT_EOC	145	0	408.6	0	12.3	0	72.7	0.1
32	CR+SH+PT_EOC	145	1	409.2	0	12.3	0	80	0.1
33	CR+SH+PT_EOC	145	2	307.1	0	12.1	0	97	0.1
34	CR+SH+PT_EOC	147	0	265.2	0	23.3	0	-127	0.1
35	CR+SH+PT_EOC	147	1	370.4	0	23.2	0	-110.9	0.1
36	CR+SH+PT_EOC	147	2	369.6	0	23.2	0	-84.8	0.1
37	CR+SH+PT_EOC	148	0	369.6	0	21.8	0	-84.8	0.1
38	CR+SH+PT_EOC	148	1	368.8	0	21.8	0	-41.1	0.1
39	CR+SH+PT_EOC	148	2	368.6	0	21.8	0	2.5	0.1
40	CR+SH+PT_EOC	149	0	368.6	0	23.6	0	2.5	0.1
41	CR+SH+PT_EOC	149	1	368.4	0	23.6	0	53.8	0.1
42	CR+SH+PT_EOC	149	2	368.8	0	23.6	0	104.9	0.1
43	CR+SH+PT_EOC	150	0	368.8	0	17.9	0	104.9	0.1
44	CR+SH+PT_EOC	150	1	369.3	0	17.9	0	116.1	0.1
45	CR+SH+PT_EOC	150	2	264.3	0	17.7	0	137.2	0.1
46	CR+SH+PT_EOC	152	0	205.8	0	23.4	0	-116.3	0.1
47	CR+SH+PT_EOC	152	1	310.7	0	23.4	0	-97.9	0.1
48	CR+SH+PT_EOC	152	2	309.9	0	23.4	0	-69.8	0.1
49	CR+SH+PT_EOC	153	0	309.9	0	21.7	0	-69.8	0.1
50	CR+SH+PT_EOC	153	1	309	0	21.7	0	-27.5	0.1
51	CR+SH+PT_EOC	153	2	308.8	0	21.7	0	14.8	0.1
52	CR+SH+PT_EOC	154	0	308.8	0	23.8	0	14.8	0.1
53	CR+SH+PT_EOC	154	1	308.6	0	23.8	0	65.5	0.1
54	CR+SH+PT_EOC	154	2	309	0	23.8	0	116.2	0.1
55	CR+SH+PT_EOC	155	0	309	0	17.5	0	116.2	0.1
56	CR+SH+PT_EOC	155	1	309.6	0	17.5	0	127.5	0.1
57	CR+SH+PT_EOC	155	2	204.8	0	17.3	0	148.5	0.1
58	CR+SH+PT_EOC	157	0	140.9	0	5.3	0	-109.6	0.1
59	CR+SH+PT_EOC	157	1	239.5	0	12.8	0	-107.6	0.1
60	CR+SH+PT_EOC	157	2	230.1	0	35.9	0	-86.6	0.1
61	CR+SH+PT_EOC	158	0	230.1	0	34.4	0	-86.6	0.1
62	CR+SH+PT_EOC	158	1	227.7	0	34.4	0	52.6	0.1
63	CR+SH+PT_EOC	158	2	226	0	34.4	0	191.7	0
64	CR+SH+PT_EOC	159	0	226	0	34.8	0	191.7	0
65	CR+SH+PT_EOC	159	1	218.8	0	4.2	0	229.9	0
66	CR+SH+PT_EOC	159	2	215.9	0	4.2	0	246.9	0

Load (Row) Number	User's Load ID	Member ID	Joint ID	Fx (kips)	Fy (kips)	Fz (kips)	Mx (ft*kip)	My (ft*kip)	Mz (ft*kip)
1	DC	133	0	162.2	0	40.9	0	-226.5	-4.1
2	DC	133	1	162.3	0	27.8	0	-44	-3.8
3	DC	133	2	162.4	0	14.7	0	69	-3.6
4	DC	134	0	162.4	0	14.7	0	69	-3.6
5	DC	134	1	162.6	0	1.8	0	112.4	-3.4
6	DC	134	2	162.7	0	-13.2	0	84.4	-3.1
7	DC	135	0	162.7	0	-13.3	0	84.4	-3.1
8	DC	135	1	162.8	0	-17.6	0	62.3	-3.1
9	DC	135	2	162.8	0	-22	0	34	-3
10	DC	137	0	-633.7	0	41.1	-0.1	-162.6	-3
11	DC	137	1	-633.6	0	38.9	-0.1	-133.8	-2.9
12	DC	137	2	-633.6	0	36.7	-0.1	-106.5	-2.9
13	DC	138	0	-633.7	0	36.2	-0.1	-106.5	-2.9
14	DC	138	1	-633.6	0	30.4	-0.1	-35	-2.8
15	DC	138	2	-633.5	0	24.6	-0.1	24.7	-2.7
16	DC	139	0	-633.5	0	25.1	-0.1	24.7	-2.7
17	DC	139	1	-633.4	0	18	-0.1	74.4	-2.6
18	DC	139	2	-633.4	0	11	-0.1	107.8	-2.5
19	DC	140	0	-633.4	0	9.5	-0.1	107.8	-2.5
20	DC	140	1	-633.4	0	7.6	-0.1	113.1	-2.5
21	DC	140	2	-633.4	0	5.7	-0.1	117.2	-2.5
22	DC	142	0	-674.2	0	18.7	-0.1	10.5	-2.4
23	DC	142	1	-674.2	0	15.6	-0.1	28	-2.4
24	DC	142	2	-674.2	0	12.4	-0.1	42.2	-2.4
25	DC	143	0	-674.2	0	12	-0.1	42.2	-2.4
26	DC	143	1	-674.1	0	6.7	-0.1	61.4	-2.3
27	DC	143	2	-674	0	1	-0.1	69.6	-2.2
28	DC	144	0	-674	0	1.5	-0.1	69.6	-2.2
29	DC	144	1	-674	0	-5.4	-0.1	65.2	-2.1
30	DC	144	2	-673.9	0	-12.2	-0.1	45.4	-2
31	DC	145	0	-673.9	0	-14.1	-0.1	45.4	-2
32	DC	145	1	-673.9	0	-16	-0.1	36.3	-2
33	DC	145	2	-673.8	0	-17.8	-0.1	26	-1.9
34	DC	147	0	-586.8	0	16.6	-0.1	21.6	-1.9
35	DC	147	1	-586.8	0	13.2	-0.1	38.3	-1.8
36	DC	147	2	-586.8	0	9.8	-0.1	51.2	-1.8
37	DC	148	0	-586.8	0	9.5	-0.1	51.2	-1.8
38	DC	148	1	-586.7	0	4.5	-0.1	65.2	-1.7
39	DC	148	2	-586.7	0	-1.2	-0.1	68.7	-1.6
40	DC	149	0	-586.7	0	-0.8	-0.1	68.7	-1.6
41	DC	149	1	-586.6	0	-7.4	-0.1	59.8	-1.5
42	DC	149	2	-586.6	0	-14.1	-0.1	36.4	-1.4
43	DC	150	0	-586.5	0	-15.6	-0.1	36.4	-1.4
44	DC	150	1	-586.5	0	-17.5	-0.1	25.9	-1.4
45	DC	150	2	-586.5	0	-19.4	-0.1	14.3	-1.4
46	DC	152	0	-374.3	0	-9.6	-0.1	141.8	-1.3
47	DC	152	1	-374.2	0	-13.2	-0.1	128.1	-1.2
48	DC	152	2	-374.2	0	-16.6	-0.1	110.1	-1.2
49	DC	153	0	-374.2	0	-16.9	-0.1	110.1	-1.2
50	DC	153	1	-374.1	0	-21.7	-0.1	72.5	-1.1
51	DC	153	2	-374.1	0	-27.4	-0.1	24.9	-1
52	DC	154	0	-374.1	0	-27.1	-0.1	24.9	-1
53	DC	154	1	-374	0	-33.6	-0.1	-39.8	-0.9
54	DC	154	2	-374	0	-40.1	-0.1	-118.4	-0.9
55	DC	155	0	-373.9	0	-41.1	-0.1	-118.4	-0.9
56	DC	155	1	-373.8	0	-43	-0.1	-145.8	-0.8
57	DC	155	2	-373.8	0	-45	-0.1	-174.5	-0.8
58	DC	157	0	-37.9	0	18.2	-0.1	-25.3	-0.7
59	DC	157	1	-37.8	0	14.4	-0.1	-4.7	-0.7
60	DC	157	2	-37.8	0	11	-0.1	11.2	-0.6
61	DC	158	0	-37.8	0	10.9	-0.1	11.2	-0.6
62	DC	158	1	-37.7	0	1	-0.1	35.2	-0.5
63	DC	158	2	-37.6	0	-9	-0.1	18.9	-0.4
64	DC	159	0	-37.6	0	-9	-0.1	18.9	-0.4
65	DC	159	1	-37.5	0	-19.2	-0.1	-39	-0.2
66	DC	159	2	-37.4	0	-29.3	-0.1	-138.3	-0.1

Load (Row) Number	User's Load ID	Member ID	Joint ID	Fx (kips)	Fy (kips)	Fz (kips)	Mx (ft*kip)	My (ft*kip)	Mz (ft*kip)
1	DW	133	0	17.1	0	0.2	0	-3.4	0
2	DW	133	1	17.1	0	0.2	0	-2.6	0
3	DW	133	2	17.1	0	0.2	0	-1.7	0
4	DW	134	0	17.1	0	0.2	0	-1.7	0
5	DW	134	1	17.1	0	0.2	0	-0.9	0
6	DW	134	2	17.1	0	0.2	0	0	0
7	DW	135	0	17.1	0	0.1	0	0	0
8	DW	135	1	17.1	0	0.1	0	0.2	0
9	DW	135	2	17.1	0	0.1	0	0.4	0
10	DW	137	0	5.3	0	0.5	0	-3.8	0
11	DW	137	1	5.3	0	0.5	0	-3.4	0
12	DW	137	2	5.3	0	0.5	0	-3	0
13	DW	138	0	5.3	0	0.6	0	-3	0
14	DW	138	1	5.3	0	0.6	0	-1.8	0
15	DW	138	2	5.3	0	0.6	0	-0.6	0
16	DW	139	0	5.3	0	0.5	0	-0.6	0
17	DW	139	1	5.3	0	0.5	0	0.7	0
18	DW	139	2	5.3	0	0.5	0	1.9	0
19	DW	140	0	5.3	0	0.6	0	1.9	0
20	DW	140	1	5.3	0	0.6	0	2.3	0
21	DW	140	2	5.3	0	0.6	0	2.6	0
22	DW	142	0	9.4	0	0.1	0	-0.5	0
23	DW	142	1	9.4	0	0.1	0	-0.5	0
24	DW	142	2	9.4	0	0.1	0	-0.4	0
25	DW	143	0	9.4	0	0.1	0	-0.4	0
26	DW	143	1	9.4	0	0.1	0	-0.2	0
27	DW	143	2	9.4	0	0.1	0	0	0
28	DW	144	0	9.4	0	0.1	0	0	0
29	DW	144	1	9.4	0	0.1	0	0.2	0
30	DW	144	2	9.4	0	0.1	0	0.4	0
31	DW	145	0	9.4	0	0.1	0	0.4	0
32	DW	145	1	9.4	0	0.1	0	0.4	0
33	DW	145	2	9.4	0	0.1	0	0.5	0
34	DW	147	0	8.1	0	0.9	0	-6	0
35	DW	147	1	8.1	0	0.9	0	-5.1	0
36	DW	147	2	8.1	0	0.9	0	-4.1	0
37	DW	148	0	8.1	0	0.9	0	-4.1	0
38	DW	148	1	8.1	0	0.9	0	-2.4	0
39	DW	148	2	8.1	0	0.9	0	-0.7	0
40	DW	149	0	8.2	0	0.9	0	-0.7	0
41	DW	149	1	8.2	0	0.9	0	1.2	0
42	DW	149	2	8.2	0	0.9	0	3.1	0
43	DW	150	0	8.1	0	0.9	0	3.1	0
44	DW	150	1	8.1	0	0.9	0	3.6	0
45	DW	150	2	8.1	0	0.9	0	4.2	0
46	DW	152	0	6.5	0	0.6	0	-3.4	0
47	DW	152	1	6.5	0	0.6	0	-2.7	0
48	DW	152	2	6.5	0	0.6	0	-2	0
49	DW	153	0	6.5	0	0.6	0	-2	0
50	DW	153	1	6.5	0	0.6	0	-0.8	0
51	DW	153	2	6.5	0	0.6	0	0.5	0
52	DW	154	0	6.5	0	0.6	0	0.5	0
53	DW	154	1	6.5	0	0.6	0	1.8	0
54	DW	154	2	6.5	0	0.6	0	3.1	0
55	DW	155	0	6.5	0	0.6	0	3.1	0
56	DW	155	1	6.5	0	0.6	0	3.5	0
57	DW	155	2	6.5	0	0.6	0	3.9	0
58	DW	157	0	2.5	0	0.6	0	-4.5	0
59	DW	157	1	2.5	0	0.6	0	-3.7	0
60	DW	157	2	2.5	0	0.6	0	-2.9	0
61	DW	158	0	2.5	0	0.6	0	-2.9	0
62	DW	158	1	2.5	0	0.6	0	-0.4	0
63	DW	158	2	2.5	0	0.6	0	2.1	0
64	DW	159	0	2.5	0	0.6	0	2.1	0
65	DW	159	1	2.5	0	0.6	0	4.7	0
66	DW	159	2	2.5	0	0.6	0	7.2	0

Load (Row) Number	User's Load ID	Member ID	Joint ID	Fx (kips)	Fy (kips)	Fz (kips)	Mx (ft*kip)	My (ft*kip)	Mz (ft*kip)
1	LL1_Deck	133	0	62.7	0	0.6	0	-12.4	-0.1
2	LL1_Deck	133	1	62.7	0	0.6	0	-9.3	-0.1
3	LL1_Deck	133	2	62.7	0	0.6	0	-6.3	-0.1
4	LL1_Deck	134	0	62.7	0	0.6	0	-6.3	-0.1
5	LL1_Deck	134	1	62.7	0	0.6	0	-3.2	-0.1
6	LL1_Deck	134	2	62.7	0	0.6	0	-0.1	-0.1
7	LL1_Deck	135	0	62.7	0	0.5	0	-0.1	-0.1
8	LL1_Deck	135	1	62.7	0	0.5	0	0.7	-0.1
9	LL1_Deck	135	2	62.7	0	0.5	0	1.5	-0.1
10	LL1_Deck	137	0	19.5	0	2	0	-13.8	-0.1
11	LL1_Deck	137	1	19.5	0	2	0	-12.4	-0.1
12	LL1_Deck	137	2	19.5	0	2	0	-10.9	-0.1
13	LL1_Deck	138	0	19.5	0	2	0	-10.9	-0.1
14	LL1_Deck	138	1	19.5	0	2	0	-6.6	-0.1
15	LL1_Deck	138	2	19.5	0	2	0	-2.2	-0.1
16	LL1_Deck	139	0	19.5	0	2	0	-2.2	-0.1
17	LL1_Deck	139	1	19.5	0	2	0	2.4	-0.1
18	LL1_Deck	139	2	19.5	0	2	0	7.1	0
19	LL1_Deck	140	0	19.5	0	2.1	0	7.1	-0.1
20	LL1_Deck	140	1	19.5	0	2.1	0	8.3	0
21	LL1_Deck	140	2	19.5	0	2.1	0	9.6	0
22	LL1_Deck	142	0	34.5	0	0.3	0	-2	-0.1
23	LL1_Deck	142	1	34.5	0	0.3	0	-1.7	-0.1
24	LL1_Deck	142	2	34.5	0	0.3	0	-1.4	-0.1
25	LL1_Deck	143	0	34.5	0	0.3	0	-1.4	-0.1
26	LL1_Deck	143	1	34.5	0	0.3	0	-0.7	0
27	LL1_Deck	143	2	34.5	0	0.3	0	0	0
28	LL1_Deck	144	0	34.5	0	0.3	0	0	0
29	LL1_Deck	144	1	34.5	0	0.3	0	0.7	0
30	LL1_Deck	144	2	34.5	0	0.3	0	1.4	0
31	LL1_Deck	145	0	34.5	0	0.4	0	1.4	0
32	LL1_Deck	145	1	34.5	0	0.4	0	1.6	0
33	LL1_Deck	145	2	34.5	0	0.4	0	1.8	0
34	LL1_Deck	147	0	29.8	0	3.1	0	-22.1	0
35	LL1_Deck	147	1	29.8	0	3.1	0	-18.6	0
36	LL1_Deck	147	2	29.8	0	3.1	0	-15.1	0
37	LL1_Deck	148	0	29.8	0	3.2	0	-15.1	0
38	LL1_Deck	148	1	29.8	0	3.2	0	-8.7	0
39	LL1_Deck	148	2	29.8	0	3.2	0	-2.4	0
40	LL1_Deck	149	0	29.8	0	3.1	0	-2.4	0
41	LL1_Deck	149	1	29.8	0	3.1	0	4.4	0
42	LL1_Deck	149	2	29.8	0	3.1	0	11.2	0
43	LL1_Deck	150	0	29.8	0	3.2	0	11.2	0
44	LL1_Deck	150	1	29.8	0	3.2	0	13.3	0
45	LL1_Deck	150	2	29.8	0	3.2	0	15.3	0
46	LL1_Deck	152	0	23.9	0	2.3	0	-12.6	0
47	LL1_Deck	152	1	23.9	0	2.3	0	-9.9	0
48	LL1_Deck	152	2	23.9	0	2.3	0	-7.2	0
49	LL1_Deck	153	0	23.9	0	2.3	0	-7.2	0
50	LL1_Deck	153	1	23.9	0	2.3	0	-2.8	0
51	LL1_Deck	153	2	23.9	0	2.3	0	1.6	0
52	LL1_Deck	154	0	23.9	0	2.2	0	1.6	0
53	LL1_Deck	154	1	23.9	0	2.2	0	6.4	0
54	LL1_Deck	154	2	23.9	0	2.2	0	11.2	0
55	LL1_Deck	155	0	23.9	0	2.3	0	11.2	0
56	LL1_Deck	155	1	23.9	0	2.3	0	12.7	0
57	LL1_Deck	155	2	23.9	0	2.3	0	14.2	0
58	LL1_Deck	157	0	9.2	0	2.3	0	-16.4	0
59	LL1_Deck	157	1	9.2	0	2.3	0	-13.6	0
60	LL1_Deck	157	2	9.2	0	2.3	0	-10.7	0
61	LL1_Deck	158	0	9.2	0	2.3	0	-10.7	0
62	LL1_Deck	158	1	9.2	0	2.3	0	-1.4	0
63	LL1_Deck	158	2	9.2	0	2.3	0	7.8	0
64	LL1_Deck	159	0	9.2	0	2.3	0	7.8	0
65	LL1_Deck	159	1	9.2	0	2.3	0	17.1	0
66	LL1_Deck	159	2	9.2	0	2.3	0	26.5	0

Load (Row) Number	User's Load ID	Member ID	Joint ID	Fx (kips)	Fy (kips)	Fz (kips)	Mx (ft*kip)	My (ft*kip)	Mz (ft*kip)
1	LL1_Deck Offset	133	0	31.3	-19.2	0.3	9	-6.2	772.4
2	LL1_Deck Offset	133	1	31.3	-19.2	0.3	9	-4.7	670.7
3	LL1_Deck Offset	133	2	31.3	-19.2	0.3	9	-3.1	568.9
4	LL1_Deck Offset	134	0	31.3	-19.2	0.3	9	-3.1	568.9
5	LL1_Deck Offset	134	1	31.3	-19.2	0.3	9	-1.6	468.6
6	LL1_Deck Offset	134	2	31.3	-19.2	0.3	9	-0.1	368.2
7	LL1_Deck Offset	135	0	31.3	-19.2	0.3	8.8	-0.1	368.2
8	LL1_Deck Offset	135	1	31.3	-19.2	0.3	8.8	0.3	340.8
9	LL1_Deck Offset	135	2	31.3	-19.2	0.3	8.8	0.7	313.4
10	LL1_Deck Offset	137	0	9.7	-15.9	1	7.3	-6.9	287.7
11	LL1_Deck Offset	137	1	9.7	-15.9	1	7.3	-6.2	276.2
12	LL1_Deck Offset	137	2	9.7	-15.9	1	7.3	-5.5	264.7
13	LL1_Deck Offset	138	0	9.7	-15.9	1	7.5	-5.5	264.7
14	LL1_Deck Offset	138	1	9.7	-15.9	1	7.5	-3.3	230.4
15	LL1_Deck Offset	138	2	9.7	-15.9	1	7.5	-1.1	196.1
16	LL1_Deck Offset	139	0	9.7	-15.9	1	7.3	-1.1	196.1
17	LL1_Deck Offset	139	1	9.7	-15.9	1	7.3	1.2	159.4
18	LL1_Deck Offset	139	2	9.7	-15.9	1	7.3	3.5	122.8
19	LL1_Deck Offset	140	0	9.7	-15.9	1	7.6	3.5	122.8
20	LL1_Deck Offset	140	1	9.7	-15.9	1	7.6	4.2	113
21	LL1_Deck Offset	140	2	9.7	-15.9	1	7.6	4.8	103.2
22	LL1_Deck Offset	142	0	17.2	-8.5	0.2	-2.7	-1	90.5
23	LL1_Deck Offset	142	1	17.2	-8.5	0.2	-2.7	-0.8	81.8
24	LL1_Deck Offset	142	2	17.2	-8.5	0.2	-2.7	-0.7	73.1
25	LL1_Deck Offset	143	0	17.2	-8.5	0.2	-2.7	-0.7	73.1
26	LL1_Deck Offset	143	1	17.2	-8.5	0.2	-2.7	-0.3	55.4
27	LL1_Deck Offset	143	2	17.2	-8.5	0.2	-2.7	0	37.8
28	LL1_Deck Offset	144	0	17.2	-8.5	0.2	-2.7	0	37.8
29	LL1_Deck Offset	144	1	17.2	-8.5	0.2	-2.7	0.3	18.6
30	LL1_Deck Offset	144	2	17.2	-8.5	0.2	-2.7	0.7	-0.6
31	LL1_Deck Offset	145	0	17.2	-8.5	0.2	-2.7	0.7	-0.6
32	LL1_Deck Offset	145	1	17.2	-8.5	0.2	-2.7	0.8	-5.7
33	LL1_Deck Offset	145	2	17.2	-8.5	0.2	-2.7	0.9	-10.9
34	LL1_Deck Offset	147	0	14.9	-2.7	1.6	-7.2	-11	-23.6
35	LL1_Deck Offset	147	1	14.9	-2.7	1.6	-7.2	-9.3	-26.7
36	LL1_Deck Offset	147	2	14.9	-2.7	1.6	-7.2	-7.5	-29.8
37	LL1_Deck Offset	148	0	14.9	-2.7	1.6	-7.2	-7.5	-29.8
38	LL1_Deck Offset	148	1	14.9	-2.7	1.6	-7.2	-4.4	-35.2
39	LL1_Deck Offset	148	2	14.9	-2.7	1.6	-7.2	-1.2	-40.7
40	LL1_Deck Offset	149	0	14.9	-2.7	1.6	-7.2	-1.2	-40.7
41	LL1_Deck Offset	149	1	14.9	-2.7	1.6	-7.2	2.2	-46.7
42	LL1_Deck Offset	149	2	14.9	-2.7	1.6	-7.2	5.6	-52.7
43	LL1_Deck Offset	150	0	14.9	-2.7	1.6	-7.3	5.6	-52.6
44	LL1_Deck Offset	150	1	14.9	-2.7	1.6	-7.3	6.6	-54.4
45	LL1_Deck Offset	150	2	14.9	-2.7	1.6	-7.3	7.6	-56.1
46	LL1_Deck Offset	152	0	11.9	1.1	1.1	-9.3	-6.3	-64.7
47	LL1_Deck Offset	152	1	11.9	1.1	1.1	-9.3	-4.9	-63.4
48	LL1_Deck Offset	152	2	11.9	1.1	1.1	-9.3	-3.6	-62
49	LL1_Deck Offset	153	0	11.9	1.1	1.1	-9.4	-3.6	-62
50	LL1_Deck Offset	153	1	11.9	1.1	1.1	-9.4	-1.4	-59.8
51	LL1_Deck Offset	153	2	11.9	1.1	1.1	-9.4	0.8	-57.6
52	LL1_Deck Offset	154	0	11.9	1.1	1.1	-9.3	0.8	-57.6
53	LL1_Deck Offset	154	1	11.9	1.1	1.1	-9.3	3.2	-55.2
54	LL1_Deck Offset	154	2	11.9	1.1	1.1	-9.3	5.6	-52.8
55	LL1_Deck Offset	155	0	11.9	1.1	1.2	-9.5	5.6	-52.8
56	LL1_Deck Offset	155	1	11.9	1.1	1.2	-9.5	6.4	-52
57	LL1_Deck Offset	155	2	11.9	1.1	1.2	-9.5	7.1	-51.3
58	LL1_Deck Offset	157	0	4.6	2.3	1.1	-8.3	-8.2	-49.3
59	LL1_Deck Offset	157	1	4.6	2.3	1.1	-8.3	-6.8	-46.5
60	LL1_Deck Offset	157	2	4.6	2.3	1.1	-8.3	-5.3	-43.6
61	LL1_Deck Offset	158	0	4.6	2.3	1.1	-8.3	-5.3	-43.6
62	LL1_Deck Offset	158	1	4.6	2.3	1.1	-8.3	-0.7	-34.4
63	LL1_Deck Offset	158	2	4.6	2.3	1.1	-8.3	3.9	-25.2
64	LL1_Deck Offset	159	0	4.6	2.3	1.1	-8.3	3.9	-25.2
65	LL1_Deck Offset	159	1	4.6	2.3	1.1	-8.3	8.6	-15.8
66	LL1_Deck Offset	159	2	4.6	2.3	1.1	-8.3	13.2	-6.5

Load (Row) Number	User's Load ID	Member ID	Joint ID	Fx (kips)	Fy (kips)	Fz (kips)	Mx (ft*kip)	My (ft*kip)	Mz (ft*kip)
1	LL1_Roof	133	0	3.5	0	3.6	0	-9.5	0
2	LL1_Roof	133	1	3.5	0	1.9	0	5.1	0
3	LL1_Roof	133	2	3.5	0	0.2	0	10.6	0
4	LL1_Roof	134	0	3.5	0	0.2	0	10.6	0
5	LL1_Roof	134	1	3.6	0	-1.5	0	7.2	0
6	LL1_Roof	134	2	3.6	0	-3.2	0	-4.9	0
7	LL1_Roof	135	0	3.6	0	-3.2	0	-4.9	0
8	LL1_Roof	135	1	3.6	0	-3.6	0	-9.8	0
9	LL1_Roof	135	2	3.6	0	-4.1	0	-15.3	0
10	LL1_Roof	137	0	0	0	2.9	0	-12.6	0
11	LL1_Roof	137	1	0	0	2.6	0	-10.6	0
12	LL1_Roof	137	2	0	0	2.4	0	-8.8	0
13	LL1_Roof	138	0	0	0	2.4	0	-8.8	0
14	LL1_Roof	138	1	0	0	1.7	0	-4.3	0
15	LL1_Roof	138	2	0	0	1	0	-1.4	0
16	LL1_Roof	139	0	0	0	1	0	-1.4	0
17	LL1_Roof	139	1	0	0	0.3	0	0.1	0
18	LL1_Roof	139	2	0	0	-0.5	0	-0.1	0
19	LL1_Roof	140	0	0	0	-0.5	0	-0.1	0
20	LL1_Roof	140	1	0	0	-0.6	0	-0.4	0
21	LL1_Roof	140	2	0	0	-0.8	0	-0.9	0
22	LL1_Roof	142	0	-0.4	0	2.2	0	-5.4	0
23	LL1_Roof	142	1	-0.4	0	1.8	0	-3.4	0
24	LL1_Roof	142	2	-0.4	0	1.5	0	-1.6	0
25	LL1_Roof	143	0	-0.4	0	1.5	0	-1.6	0
26	LL1_Roof	143	1	-0.4	0	0.9	0	0.8	0
27	LL1_Roof	143	2	-0.4	0	0.2	0	1.9	0
28	LL1_Roof	144	0	-0.4	0	0.2	0	1.9	0
29	LL1_Roof	144	1	-0.4	0	-0.5	0	1.5	0
30	LL1_Roof	144	2	-0.3	0	-1.2	0	-0.4	0
31	LL1_Roof	145	0	-0.3	0	-1.2	0	-0.4	0
32	LL1_Roof	145	1	-0.3	0	-1.4	0	-1.3	0
33	LL1_Roof	145	2	-0.3	0	-1.6	0	-2.2	0
34	LL1_Roof	147	0	-0.9	0	2.5	0	-7.2	0
35	LL1_Roof	147	1	-0.9	0	2.1	0	-4.7	0
36	LL1_Roof	147	2	-0.9	0	1.8	0	-2.5	0
37	LL1_Roof	148	0	-0.9	0	1.8	0	-2.5	0
38	LL1_Roof	148	1	-0.9	0	1.1	0	0.4	0
39	LL1_Roof	148	2	-0.9	0	0.5	0	2	0
40	LL1_Roof	149	0	-0.9	0	0.5	0	2	0
41	LL1_Roof	149	1	-0.9	0	-0.2	0	2.2	0
42	LL1_Roof	149	2	-0.8	0	-0.9	0	0.9	0
43	LL1_Roof	150	0	-0.8	0	-0.9	0	0.9	0
44	LL1_Roof	150	1	-0.8	0	-1.1	0	0.3	0
45	LL1_Roof	150	2	-0.8	0	-1.3	0	-0.5	0
46	LL1_Roof	152	0	-1.7	0	2	0	-5.7	0
47	LL1_Roof	152	1	-1.7	0	1.7	0	-3.5	0
48	LL1_Roof	152	2	-1.7	0	1.3	0	-1.8	0
49	LL1_Roof	153	0	-1.7	0	1.3	0	-1.8	0
50	LL1_Roof	153	1	-1.7	0	0.7	0	0.1	0
51	LL1_Roof	153	2	-1.7	0	0	0	0.8	0
52	LL1_Roof	154	0	-1.7	0	0	0	0.8	0
53	LL1_Roof	154	1	-1.7	0	-0.7	0	0.1	0
54	LL1_Roof	154	2	-1.7	0	-1.3	0	-2	0
55	LL1_Roof	155	0	-1.7	0	-1.3	0	-2	0
56	LL1_Roof	155	1	-1.7	0	-1.5	0	-2.9	0
57	LL1_Roof	155	2	-1.7	0	-1.8	0	-4	0
58	LL1_Roof	157	0	-0.5	0	3.6	0	-11.3	0
59	LL1_Roof	157	1	-0.5	0	3.2	0	-7.1	0
60	LL1_Roof	157	2	-0.4	0	2.8	0	-3.3	0
61	LL1_Roof	158	0	-0.4	0	2.8	0	-3.3	0
62	LL1_Roof	158	1	-0.4	0	1.5	0	5.4	0
63	LL1_Roof	158	2	-0.4	0	0.2	0	8.8	0
64	LL1_Roof	159	0	-0.4	0	0.2	0	8.8	0
65	LL1_Roof	159	1	-0.4	0	-1.1	0	6.9	0
66	LL1_Roof	159	2	-0.4	0	-2.4	0	-0.3	0

Load (Row) Number	User's Load ID	Member ID	Joint ID	Fx (kips)	Fy (kips)	Fz (kips)	Mx (ft*kip)	My (ft*kip)	Mz (ft*kip)
1	LL2_Deck	133	0	89.7	0	-0.6	0	1.9	1.6
2	LL2_Deck	133	1	89.7	0	-0.6	0	-1.2	1.5
3	LL2_Deck	133	2	89.7	0	-0.6	0	-4.4	1.4
4	LL2_Deck	134	0	89.7	0	-0.6	0	-4.4	1.4
5	LL2_Deck	134	1	89.7	0	-0.6	0	-7.4	1.3
6	LL2_Deck	134	2	89.7	0	-0.6	0	-10.4	1.2
7	LL2_Deck	135	0	89.7	0	-0.6	0	-10.4	1.2
8	LL2_Deck	135	1	89.7	0	-0.6	0	-11.3	1.1
9	LL2_Deck	135	2	89.7	0	-0.6	0	-12.2	1.1
10	LL2_Deck	137	0	147.8	0	-0.3	0	-5.8	1.1
11	LL2_Deck	137	1	147.8	0	-0.3	0	-6	1.1
12	LL2_Deck	137	2	147.8	0	-0.3	0	-6.3	1.1
13	LL2_Deck	138	0	147.8	0	-0.2	0	-6.3	1.1
14	LL2_Deck	138	1	147.8	0	-0.2	0	-6.7	1
15	LL2_Deck	138	2	147.8	0	-0.2	0	-7.1	1
16	LL2_Deck	139	0	147.8	0	-0.3	0	-7.1	1
17	LL2_Deck	139	1	147.8	0	-0.3	0	-7.8	0.9
18	LL2_Deck	139	2	147.8	0	-0.3	0	-8.4	0.9
19	LL2_Deck	140	0	147.8	0	0.1	0	-8.4	0.9
20	LL2_Deck	140	1	147.8	0	0.1	0	-8.4	0.9
21	LL2_Deck	140	2	147.8	0	0.1	0	-8.4	0.9
22	LL2_Deck	142	0	148.1	0	1.9	0	-20.8	0.9
23	LL2_Deck	142	1	148.1	0	1.9	0	-18.9	0.8
24	LL2_Deck	142	2	148.1	0	1.9	0	-16.9	0.8
25	LL2_Deck	143	0	148.1	0	2	0	-16.9	0.8
26	LL2_Deck	143	1	148.1	0	2	0	-12.7	0.8
27	LL2_Deck	143	2	148.1	0	2	0	-8.5	0.7
28	LL2_Deck	144	0	148.1	0	1.9	0	-8.5	0.7
29	LL2_Deck	144	1	148.1	0	1.9	0	-4.2	0.7
30	LL2_Deck	144	2	148.1	0	1.9	0	0.1	0.7
31	LL2_Deck	145	0	148.1	0	2.3	0	0.1	0.7
32	LL2_Deck	145	1	148.1	0	2.3	0	1.5	0.6
33	LL2_Deck	145	2	148.1	0	2.3	0	2.9	0.6
34	LL2_Deck	147	0	123	0	4.1	0	-35.2	0.6
35	LL2_Deck	147	1	123	0	4.1	0	-30.6	0.6
36	LL2_Deck	147	2	123	0	4.1	0	-26	0.6
37	LL2_Deck	148	0	123	0	4.2	0	-26	0.6
38	LL2_Deck	148	1	123	0	4.2	0	-17.6	0.6
39	LL2_Deck	148	2	123	0	4.2	0	-9.2	0.5
40	LL2_Deck	149	0	123	0	4.1	0	-9.2	0.5
41	LL2_Deck	149	1	123	0	4.1	0	-0.3	0.5
42	LL2_Deck	149	2	123	0	4.1	0	8.6	0.4
43	LL2_Deck	150	0	123	0	4.4	0	8.6	0.4
44	LL2_Deck	150	1	123	0	4.4	0	11.4	0.4
45	LL2_Deck	150	2	123	0	4.4	0	14.1	0.4
46	LL2_Deck	152	0	79.1	0	8.4	0	-52.5	0.4
47	LL2_Deck	152	1	79.1	0	8.4	0	-42.4	0.4
48	LL2_Deck	152	2	79.1	0	8.4	0	-32.3	0.4
49	LL2_Deck	153	0	79.1	0	8.5	0	-32.3	0.4
50	LL2_Deck	153	1	79.1	0	8.5	0	-15.8	0.3
51	LL2_Deck	153	2	79.1	0	8.5	0	0.7	0.3
52	LL2_Deck	154	0	79.1	0	8.4	0	0.7	0.3
53	LL2_Deck	154	1	79.1	0	8.4	0	18.7	0.3
54	LL2_Deck	154	2	79.1	0	8.4	0	36.6	0.3
55	LL2_Deck	155	0	79.1	0	8.6	0	36.6	0.3
56	LL2_Deck	155	1	79.1	0	8.6	0	42.2	0.2
57	LL2_Deck	155	2	79.1	0	8.6	0	47.8	0.2
58	LL2_Deck	157	0	12.2	0	3.7	0	-27.6	0.2
59	LL2_Deck	157	1	12.2	0	3.7	0	-22.9	0.2
60	LL2_Deck	157	2	12.2	0	3.7	0	-18.1	0.2
61	LL2_Deck	158	0	12.2	0	3.7	0	-18.1	0.2
62	LL2_Deck	158	1	12.2	0	3.7	0	-3	0.1
63	LL2_Deck	158	2	12.2	0	3.7	0	12.2	0.1
64	LL2_Deck	159	0	12.2	0	3.7	0	12.2	0.1
65	LL2_Deck	159	1	12.2	0	3.7	0	27.5	0.1
66	LL2_Deck	159	2	12.2	0	3.7	0	42.9	0

Load (Row) Number	User's Load ID	Member ID	Joint ID	Fx (kips)	Fy (kips)	Fz (kips)	Mx (ft*kip)	My (ft*kip)	Mz (ft*kip)
1	LL2_Deck Offset	133	0	44.9	-7.3	-0.3	8.8	0.9	491.7
2	LL2_Deck Offset	133	1	44.9	-7.3	-0.3	8.8	-0.6	453
3	LL2_Deck Offset	133	2	44.9	-7.3	-0.3	8.8	-2.2	414.4
4	LL2_Deck Offset	134	0	44.9	-7.3	-0.3	8.9	-2.2	414.4
5	LL2_Deck Offset	134	1	44.9	-7.3	-0.3	8.9	-3.7	376.3
6	LL2_Deck Offset	134	2	44.9	-7.3	-0.3	8.9	-5.2	338.1
7	LL2_Deck Offset	135	0	44.9	-7.3	-0.3	8.7	-5.2	338.2
8	LL2_Deck Offset	135	1	44.9	-7.3	-0.3	8.7	-5.6	327.8
9	LL2_Deck Offset	135	2	44.9	-7.3	-0.3	8.7	-6.1	317.3
10	LL2_Deck Offset	137	0	73.9	-6.6	-0.1	8.2	-2.9	309.8
11	LL2_Deck Offset	137	1	73.9	-6.6	-0.1	8.2	-3	305
12	LL2_Deck Offset	137	2	73.9	-6.6	-0.1	8.2	-3.1	300.2
13	LL2_Deck Offset	138	0	73.9	-6.6	-0.1	8.4	-3.1	300.2
14	LL2_Deck Offset	138	1	73.9	-6.6	-0.1	8.4	-3.3	285.8
15	LL2_Deck Offset	138	2	73.9	-6.6	-0.1	8.4	-3.5	271.5
16	LL2_Deck Offset	139	0	73.9	-6.6	-0.1	8.3	-3.5	271.5
17	LL2_Deck Offset	139	1	73.9	-6.6	-0.1	8.3	-3.9	256.2
18	LL2_Deck Offset	139	2	73.9	-6.6	-0.1	8.3	-4.2	240.8
19	LL2_Deck Offset	140	0	73.9	-6.6	0	8.8	-4.2	240.8
20	LL2_Deck Offset	140	1	73.9	-6.6	0	8.8	-4.2	236.7
21	LL2_Deck Offset	140	2	73.9	-6.6	0	8.8	-4.2	232.6
22	LL2_Deck Offset	142	0	74	-5.6	1	5.7	-10.4	228.2
23	LL2_Deck Offset	142	1	74	-5.6	1	5.7	-9.4	222.5
24	LL2_Deck Offset	142	2	74	-5.6	1	5.7	-8.5	216.7
25	LL2_Deck Offset	143	0	74	-5.6	1	5.8	-8.5	216.7
26	LL2_Deck Offset	143	1	74	-5.6	1	5.8	-6.4	205.1
27	LL2_Deck Offset	143	2	74	-5.6	1	5.8	-4.3	193.5
28	LL2_Deck Offset	144	0	74	-5.6	1	5.7	-4.3	193.5
29	LL2_Deck Offset	144	1	74	-5.6	1	5.7	-2.1	180.8
30	LL2_Deck Offset	144	2	74	-5.6	1	5.7	0.1	168.2
31	LL2_Deck Offset	145	0	74	-5.6	1.2	6.2	0.1	168.2
32	LL2_Deck Offset	145	1	74	-5.6	1.2	6.2	0.8	164.8
33	LL2_Deck Offset	145	2	74	-5.6	1.2	6.2	1.5	161.4
34	LL2_Deck Offset	147	0	61.5	-4.6	2.1	4.6	-17.6	157
35	LL2_Deck Offset	147	1	61.5	-4.6	2.1	4.6	-15.3	151.8
36	LL2_Deck Offset	147	2	61.5	-4.6	2.1	4.6	-13	146.6
37	LL2_Deck Offset	148	0	61.5	-4.6	2.1	4.7	-13	146.6
38	LL2_Deck Offset	148	1	61.5	-4.6	2.1	4.7	-8.8	137.3
39	LL2_Deck Offset	148	2	61.5	-4.6	2.1	4.7	-4.6	128
40	LL2_Deck Offset	149	0	61.5	-4.6	2	4.6	-4.6	128.1
41	LL2_Deck Offset	149	1	61.5	-4.6	2	4.6	-0.2	118
42	LL2_Deck Offset	149	2	61.5	-4.6	2	4.6	4.3	107.9
43	LL2_Deck Offset	150	0	61.5	-4.6	2.2	4.9	4.3	107.9
44	LL2_Deck Offset	150	1	61.5	-4.6	2.2	4.9	5.7	105
45	LL2_Deck Offset	150	2	61.5	-4.6	2.2	4.9	7.1	102
46	LL2_Deck Offset	152	0	39.5	-3.5	4.2	4.3	-26.2	97.1
47	LL2_Deck Offset	152	1	39.5	-3.5	4.2	4.3	-21.2	92.8
48	LL2_Deck Offset	152	2	39.5	-3.5	4.2	4.3	-16.1	88.6
49	LL2_Deck Offset	153	0	39.5	-3.5	4.2	4.3	-16.1	88.6
50	LL2_Deck Offset	153	1	39.5	-3.5	4.2	4.3	-7.9	81.6
51	LL2_Deck Offset	153	2	39.5	-3.5	4.2	4.3	0.4	74.7
52	LL2_Deck Offset	154	0	39.5	-3.5	4.2	4.3	0.4	74.7
53	LL2_Deck Offset	154	1	39.5	-3.5	4.2	4.3	9.3	67.2
54	LL2_Deck Offset	154	2	39.5	-3.5	4.2	4.3	18.3	59.6
55	LL2_Deck Offset	155	0	39.5	-3.5	4.3	4.4	18.3	59.6
56	LL2_Deck Offset	155	1	39.5	-3.5	4.3	4.4	21.1	57.3
57	LL2_Deck Offset	155	2	39.5	-3.5	4.3	4.4	23.9	55
58	LL2_Deck Offset	157	0	6.1	-2.2	1.9	4.2	-13.8	48.5
59	LL2_Deck Offset	157	1	6.1	-2.2	1.9	4.2	-11.4	45.7
60	LL2_Deck Offset	157	2	6.1	-2.2	1.9	4.2	-9.1	42.9
61	LL2_Deck Offset	158	0	6.1	-2.2	1.9	4.2	-9.1	42.9
62	LL2_Deck Offset	158	1	6.1	-2.2	1.9	4.2	-1.5	33.9
63	LL2_Deck Offset	158	2	6.1	-2.2	1.9	4.2	6.1	25
64	LL2_Deck Offset	159	0	6.1	-2.2	1.9	4.2	6.1	25
65	LL2_Deck Offset	159	1	6.1	-2.2	1.9	4.2	13.8	15.9
66	LL2_Deck Offset	159	2	6.1	-2.2	1.9	4.2	21.5	6.9

Load (Row) Number	User's Load ID	Member ID	Joint ID	Fx (kips)	Fy (kips)	Fz (kips)	Mx (ft*kip)	My (ft*kip)	Mz (ft*kip)
1	LL2_Roof	133	0	9.3	0	0	0	-0.1	0.2
2	LL2_Roof	133	1	9.3	0	0	0	-0.4	0.2
3	LL2_Roof	133	2	9.3	0	0	0	-0.7	0.2
4	LL2_Roof	134	0	9.3	0	0	0	-0.7	0.2
5	LL2_Roof	134	1	9.3	0	0	0	-0.9	0.1
6	LL2_Roof	134	2	9.3	0	0	0	-1.1	0.1
7	LL2_Roof	135	0	9.3	0	-0.1	0	-1.1	0.1
8	LL2_Roof	135	1	9.3	0	-0.1	0	-1.2	0.1
9	LL2_Roof	135	2	9.3	0	-0.1	0	-1.3	0.1
10	LL2_Roof	137	0	16.8	0	-0.1	0	-0.6	0.1
11	LL2_Roof	137	1	16.8	0	-0.1	0	-0.6	0.1
12	LL2_Roof	137	2	16.8	0	-0.1	0	-0.6	0.1
13	LL2_Roof	138	0	16.8	0	0	0	-0.6	0.1
14	LL2_Roof	138	1	16.8	0	0	0	-0.7	0.1
15	LL2_Roof	138	2	16.8	0	0	0	-0.8	0.1
16	LL2_Roof	139	0	16.8	0	-0.1	0	-0.8	0.1
17	LL2_Roof	139	1	16.8	0	-0.1	0	-0.9	0.1
18	LL2_Roof	139	2	16.8	0	-0.1	0	-1	0.1
19	LL2_Roof	140	0	16.8	0	0	0	-1	0.1
20	LL2_Roof	140	1	16.8	0	0	0	-1	0.1
21	LL2_Roof	140	2	16.8	0	0	0	-1.1	0.1
22	LL2_Roof	142	0	17	0	0.2	0	-2.4	0.1
23	LL2_Roof	142	1	17	0	0.2	0	-2.2	0.1
24	LL2_Roof	142	2	17	0	0.2	0	-2	0.1
25	LL2_Roof	143	0	17	0	0.2	0	-2	0.1
26	LL2_Roof	143	1	17	0	0.2	0	-1.5	0.1
27	LL2_Roof	143	2	17	0	0.2	0	-1	0.1
28	LL2_Roof	144	0	17	0	0.2	0	-1	0.1
29	LL2_Roof	144	1	17	0	0.2	0	-0.5	0.1
30	LL2_Roof	144	2	17	0	0.2	0	0	0.1
31	LL2_Roof	145	0	17	0	0.3	0	0	0.1
32	LL2_Roof	145	1	17	0	0.3	0	0.2	0.1
33	LL2_Roof	145	2	17	0	0.3	0	0.3	0.1
34	LL2_Roof	147	0	14.2	0	0.5	0	-4.1	0.1
35	LL2_Roof	147	1	14.2	0	0.5	0	-3.6	0.1
36	LL2_Roof	147	2	14.2	0	0.5	0	-3	0.1
37	LL2_Roof	148	0	14.2	0	0.5	0	-3	0.1
38	LL2_Roof	148	1	14.2	0	0.5	0	-2	0.1
39	LL2_Roof	148	2	14.2	0	0.5	0	-1.1	0.1
40	LL2_Roof	149	0	14.2	0	0.5	0	-1.1	0.1
41	LL2_Roof	149	1	14.2	0	0.5	0	0	0.1
42	LL2_Roof	149	2	14.2	0	0.5	0	1	0.1
43	LL2_Roof	150	0	14.2	0	0.5	0	1	0.1
44	LL2_Roof	150	1	14.2	0	0.5	0	1.3	0.1
45	LL2_Roof	150	2	14.2	0	0.5	0	1.7	0.1
46	LL2_Roof	152	0	9.1	0	1	0	-6	0
47	LL2_Roof	152	1	9.1	0	1	0	-4.9	0
48	LL2_Roof	152	2	9.1	0	1	0	-3.7	0
49	LL2_Roof	153	0	9.1	0	1	0	-3.7	0
50	LL2_Roof	153	1	9.1	0	1	0	-1.8	0
51	LL2_Roof	153	2	9.1	0	1	0	0.1	0
52	LL2_Roof	154	0	9.1	0	1	0	0.1	0
53	LL2_Roof	154	1	9.1	0	1	0	2.2	0
54	LL2_Roof	154	2	9.1	0	1	0	4.2	0
55	LL2_Roof	155	0	9.1	0	1	0	4.2	0
56	LL2_Roof	155	1	9.1	0	1	0	4.9	0
57	LL2_Roof	155	2	9.1	0	1	0	5.5	0
58	LL2_Roof	157	0	1.4	0	0.4	0	-3.1	0
59	LL2_Roof	157	1	1.4	0	0.4	0	-2.6	0
60	LL2_Roof	157	2	1.4	0	0.4	0	-2.1	0
61	LL2_Roof	158	0	1.4	0	0.4	0	-2.1	0
62	LL2_Roof	158	1	1.4	0	0.4	0	-0.3	0
63	LL2_Roof	158	2	1.4	0	0.4	0	1.4	0
64	LL2_Roof	159	0	1.4	0	0.4	0	1.4	0
65	LL2_Roof	159	1	1.4	0	0.4	0	3.1	0
66	LL2_Roof	159	2	1.4	0	0.4	0	4.9	0

Load (Row) Number	User's Load ID	Member ID	Joint ID	Fx (kips)	Fy (kips)	Fz (kips)	Mx (ft*kip)	My (ft*kip)	Mz (ft*kip)
1	LL3_Deck	133	0	-27	0	1.2	0	-14.3	-1.7
2	LL3_Deck	133	1	-27	0	1.2	0	-8.1	-1.6
3	LL3_Deck	133	2	-27	0	1.2	0	-1.9	-1.4
4	LL3_Deck	134	0	-27	0	1.2	0	-1.9	-1.4
5	LL3_Deck	134	1	-27	0	1.2	0	4.2	-1.3
6	LL3_Deck	134	2	-27	0	1.2	0	10.3	-1.2
7	LL3_Deck	135	0	-27	0	1.2	0	10.3	-1.2
8	LL3_Deck	135	1	-27	0	1.2	0	11.9	-1.2
9	LL3_Deck	135	2	-27	0	1.2	0	13.6	-1.2
10	LL3_Deck	137	0	-128.3	0	2.3	0	-8	-1.2
11	LL3_Deck	137	1	-128.3	0	2.3	0	-6.3	-1.1
12	LL3_Deck	137	2	-128.3	0	2.3	0	-4.7	-1.1
13	LL3_Deck	138	0	-128.3	0	2.2	0	-4.7	-1.1
14	LL3_Deck	138	1	-128.3	0	2.2	0	0.1	-1.1
15	LL3_Deck	138	2	-128.3	0	2.2	0	4.9	-1
16	LL3_Deck	139	0	-128.3	0	2.3	0	4.9	-1
17	LL3_Deck	139	1	-128.3	0	2.3	0	10.2	-1
18	LL3_Deck	139	2	-128.3	0	2.3	0	15.5	-0.9
19	LL3_Deck	140	0	-128.3	0	2	0	15.5	-0.9
20	LL3_Deck	140	1	-128.3	0	2	0	16.7	-0.9
21	LL3_Deck	140	2	-128.3	0	2	0	18	-0.9
22	LL3_Deck	142	0	-113.5	0	-1.6	0	18.9	-0.9
23	LL3_Deck	142	1	-113.5	0	-1.6	0	17.2	-0.9
24	LL3_Deck	142	2	-113.5	0	-1.6	0	15.5	-0.9
25	LL3_Deck	143	0	-113.5	0	-1.7	0	15.5	-0.9
26	LL3_Deck	143	1	-113.5	0	-1.7	0	12	-0.8
27	LL3_Deck	143	2	-113.5	0	-1.7	0	8.5	-0.8
28	LL3_Deck	144	0	-113.5	0	-1.6	0	8.5	-0.8
29	LL3_Deck	144	1	-113.5	0	-1.6	0	4.9	-0.7
30	LL3_Deck	144	2	-113.5	0	-1.6	0	1.3	-0.7
31	LL3_Deck	145	0	-113.5	0	-1.9	0	1.3	-0.7
32	LL3_Deck	145	1	-113.5	0	-1.9	0	0.1	-0.7
33	LL3_Deck	145	2	-113.5	0	-1.9	0	-1.1	-0.7
34	LL3_Deck	147	0	-93.2	0	-1	0	13.1	-0.7
35	LL3_Deck	147	1	-93.2	0	-1	0	12	-0.6
36	LL3_Deck	147	2	-93.2	0	-1	0	10.9	-0.6
37	LL3_Deck	148	0	-93.2	0	-1	0	10.9	-0.6
38	LL3_Deck	148	1	-93.2	0	-1	0	8.9	-0.6
39	LL3_Deck	148	2	-93.2	0	-1	0	6.8	-0.5
40	LL3_Deck	149	0	-93.2	0	-1	0	6.8	-0.5
41	LL3_Deck	149	1	-93.2	0	-1	0	4.7	-0.5
42	LL3_Deck	149	2	-93.2	0	-1	0	2.7	-0.5
43	LL3_Deck	150	0	-93.2	0	-1.2	0	2.7	-0.5
44	LL3_Deck	150	1	-93.2	0	-1.2	0	1.9	-0.5
45	LL3_Deck	150	2	-93.2	0	-1.2	0	1.2	-0.4
46	LL3_Deck	152	0	-55.2	0	-6.2	0	39.9	-0.4
47	LL3_Deck	152	1	-55.2	0	-6.2	0	32.5	-0.4
48	LL3_Deck	152	2	-55.2	0	-6.2	0	25.1	-0.4
49	LL3_Deck	153	0	-55.2	0	-6.2	0	25.1	-0.4
50	LL3_Deck	153	1	-55.2	0	-6.2	0	13	-0.4
51	LL3_Deck	153	2	-55.2	0	-6.2	0	0.9	-0.3
52	LL3_Deck	154	0	-55.2	0	-6.2	0	0.9	-0.3
53	LL3_Deck	154	1	-55.2	0	-6.2	0	-12.2	-0.3
54	LL3_Deck	154	2	-55.2	0	-6.2	0	-25.4	-0.3
55	LL3_Deck	155	0	-55.2	0	-6.3	0	-25.4	-0.3
56	LL3_Deck	155	1	-55.2	0	-6.3	0	-29.5	-0.3
57	LL3_Deck	155	2	-55.2	0	-6.3	0	-33.6	-0.2
58	LL3_Deck	157	0	-3	0	-1.5	0	11.1	-0.2
59	LL3_Deck	157	1	-3	0	-1.5	0	9.3	-0.2
60	LL3_Deck	157	2	-3	0	-1.5	0	7.5	-0.2
61	LL3_Deck	158	0	-3	0	-1.5	0	7.5	-0.2
62	LL3_Deck	158	1	-3	0	-1.5	0	1.5	-0.1
63	LL3_Deck	158	2	-3	0	-1.5	0	-4.4	-0.1
64	LL3_Deck	159	0	-3	0	-1.5	0	-4.4	-0.1
65	LL3_Deck	159	1	-3	0	-1.5	0	-10.4	-0.1
66	LL3_Deck	159	2	-3	0	-1.5	0	-16.4	0

Load (Row) Number	User's Load ID	Member ID	Joint ID	Fx (kips)	Fy (kips)	Fz (kips)	Mx (ft*kip)	My (ft*kip)	Mz (ft*kip)
1	LL3_Deck Offset	133	0	-13.5	-11.9	0.6	0.1	-7.1	280.7
2	LL3_Deck Offset	133	1	-13.5	-11.9	0.6	0.1	-4	217.6
3	LL3_Deck Offset	133	2	-13.5	-11.9	0.6	0.1	-1	154.5
4	LL3_Deck Offset	134	0	-13.5	-11.9	0.6	0.1	-1	154.5
5	LL3_Deck Offset	134	1	-13.5	-11.9	0.6	0.1	2.1	92.3
6	LL3_Deck Offset	134	2	-13.5	-11.9	0.6	0.1	5.1	30
7	LL3_Deck Offset	135	0	-13.5	-11.9	0.6	0.1	5.1	30
8	LL3_Deck Offset	135	1	-13.5	-11.9	0.6	0.1	6	13
9	LL3_Deck Offset	135	2	-13.5	-11.9	0.6	0.1	6.8	-3.9
10	LL3_Deck Offset	137	0	-64.2	-9.3	1.2	-0.9	-4	-22.1
11	LL3_Deck Offset	137	1	-64.2	-9.3	1.2	-0.9	-3.2	-28.8
12	LL3_Deck Offset	137	2	-64.2	-9.3	1.2	-0.9	-2.3	-35.5
13	LL3_Deck Offset	138	0	-64.2	-9.3	1.1	-1	-2.3	-35.5
14	LL3_Deck Offset	138	1	-64.2	-9.3	1.1	-1	0.1	-55.4
15	LL3_Deck Offset	138	2	-64.2	-9.3	1.1	-1	2.4	-75.4
16	LL3_Deck Offset	139	0	-64.2	-9.3	1.2	-0.9	2.4	-75.4
17	LL3_Deck Offset	139	1	-64.2	-9.3	1.2	-0.9	5.1	-96.7
18	LL3_Deck Offset	139	2	-64.2	-9.3	1.2	-0.9	7.8	-118.1
19	LL3_Deck Offset	140	0	-64.2	-9.3	1	-1.2	7.8	-118.1
20	LL3_Deck Offset	140	1	-64.2	-9.3	1	-1.2	8.4	-123.7
21	LL3_Deck Offset	140	2	-64.2	-9.3	1	-1.2	9	-129.4
22	LL3_Deck Offset	142	0	-56.8	-2.9	-0.8	-8.4	9.4	-137.7
23	LL3_Deck Offset	142	1	-56.8	-2.9	-0.8	-8.4	8.6	-140.7
24	LL3_Deck Offset	142	2	-56.8	-2.9	-0.8	-8.4	7.8	-143.7
25	LL3_Deck Offset	143	0	-56.8	-2.9	-0.8	-8.5	7.8	-143.7
26	LL3_Deck Offset	143	1	-56.8	-2.9	-0.8	-8.5	6	-149.7
27	LL3_Deck Offset	143	2	-56.8	-2.9	-0.8	-8.5	4.3	-155.7
28	LL3_Deck Offset	144	0	-56.8	-2.9	-0.8	-8.4	4.3	-155.7
29	LL3_Deck Offset	144	1	-56.8	-2.9	-0.8	-8.4	2.4	-162.2
30	LL3_Deck Offset	144	2	-56.8	-2.9	-0.8	-8.4	0.6	-168.8
31	LL3_Deck Offset	145	0	-56.8	-2.9	-1	-8.9	0.6	-168.7
32	LL3_Deck Offset	145	1	-56.8	-2.9	-1	-8.9	0	-170.5
33	LL3_Deck Offset	145	2	-56.8	-2.9	-1	-8.9	-0.5	-172.3
34	LL3_Deck Offset	147	0	-46.6	1.9	-0.5	-11.8	6.6	-180.7
35	LL3_Deck Offset	147	1	-46.6	1.9	-0.5	-11.8	6	-178.5
36	LL3_Deck Offset	147	2	-46.6	1.9	-0.5	-11.8	5.5	-176.4
37	LL3_Deck Offset	148	0	-46.6	1.9	-0.5	-11.9	5.5	-176.4
38	LL3_Deck Offset	148	1	-46.6	1.9	-0.5	-11.9	4.4	-172.6
39	LL3_Deck Offset	148	2	-46.6	1.9	-0.5	-11.9	3.4	-168.8
40	LL3_Deck Offset	149	0	-46.6	1.9	-0.5	-11.8	3.4	-168.8
41	LL3_Deck Offset	149	1	-46.6	1.9	-0.5	-11.8	2.4	-164.7
42	LL3_Deck Offset	149	2	-46.6	1.9	-0.5	-11.8	1.3	-160.5
43	LL3_Deck Offset	150	0	-46.6	1.9	-0.6	-12.2	1.3	-160.5
44	LL3_Deck Offset	150	1	-46.6	1.9	-0.6	-12.2	1	-159.3
45	LL3_Deck Offset	150	2	-46.6	1.9	-0.6	-12.2	0.6	-158.1
46	LL3_Deck Offset	152	0	-27.6	4.7	-3.1	-13.6	20	-161.8
47	LL3_Deck Offset	152	1	-27.6	4.7	-3.1	-13.6	16.3	-156.2
48	LL3_Deck Offset	152	2	-27.6	4.7	-3.1	-13.6	12.5	-150.5
49	LL3_Deck Offset	153	0	-27.6	4.7	-3.1	-13.7	12.5	-150.5
50	LL3_Deck Offset	153	1	-27.6	4.7	-3.1	-13.7	6.5	-141.4
51	LL3_Deck Offset	153	2	-27.6	4.7	-3.1	-13.7	0.5	-132.3
52	LL3_Deck Offset	154	0	-27.6	4.7	-3.1	-13.6	0.5	-132.3
53	LL3_Deck Offset	154	1	-27.6	4.7	-3.1	-13.6	-6.1	-122.4
54	LL3_Deck Offset	154	2	-27.6	4.7	-3.1	-13.6	-12.7	-112.4
55	LL3_Deck Offset	155	0	-27.6	4.7	-3.1	-13.9	-12.7	-112.4
56	LL3_Deck Offset	155	1	-27.6	4.7	-3.1	-13.9	-14.7	-109.3
57	LL3_Deck Offset	155	2	-27.6	4.7	-3.1	-13.9	-16.8	-106.3
58	LL3_Deck Offset	157	0	-1.5	4.5	-0.7	-12.5	5.6	-97.8
59	LL3_Deck Offset	157	1	-1.5	4.5	-0.7	-12.5	4.7	-92.1
60	LL3_Deck Offset	157	2	-1.5	4.5	-0.7	-12.5	3.7	-86.5
61	LL3_Deck Offset	158	0	-1.5	4.5	-0.7	-12.5	3.7	-86.4
62	LL3_Deck Offset	158	1	-1.5	4.5	-0.7	-12.5	0.8	-68.3
63	LL3_Deck Offset	158	2	-1.5	4.5	-0.7	-12.5	-2.2	-50.1
64	LL3_Deck Offset	159	0	-1.5	4.5	-0.7	-12.5	-2.2	-50.1
65	LL3_Deck Offset	159	1	-1.5	4.5	-0.7	-12.5	-5.2	-31.7
66	LL3_Deck Offset	159	2	-1.5	4.5	-0.7	-12.5	-8.2	-13.3

Load (Row) Number	User's Load ID	Member ID	Joint ID	Fx (kips)	Fy (kips)	Fz (kips)	Mx (ft*kip)	My (ft*kip)	Mz (ft*kip)
1	LL3_Roof	133	0	-5.8	0	3.6	0	-9.3	-0.1
2	LL3_Roof	133	1	-5.8	0	1.9	0	5.5	-0.1
3	LL3_Roof	133	2	-5.7	0	0.2	0	11.3	-0.1
4	LL3_Roof	134	0	-5.7	0	0.2	0	11.3	-0.1
5	LL3_Roof	134	1	-5.7	0	-1.4	0	8.1	-0.1
6	LL3_Roof	134	2	-5.7	0	-3.1	0	-3.8	-0.1
7	LL3_Roof	135	0	-5.7	0	-3.1	0	-3.8	-0.1
8	LL3_Roof	135	1	-5.7	0	-3.6	0	-8.6	-0.1
9	LL3_Roof	135	2	-5.7	0	-4	0	-14	-0.1
10	LL3_Roof	137	0	-16.8	0	2.9	0	-12	-0.1
11	LL3_Roof	137	1	-16.8	0	2.7	0	-10	-0.1
12	LL3_Roof	137	2	-16.8	0	2.5	0	-8.1	-0.1
13	LL3_Roof	138	0	-16.8	0	2.4	0	-8.1	-0.1
14	LL3_Roof	138	1	-16.8	0	1.8	0	-3.6	-0.1
15	LL3_Roof	138	2	-16.8	0	1.1	0	-0.6	-0.1
16	LL3_Roof	139	0	-16.8	0	1.1	0	-0.6	-0.1
17	LL3_Roof	139	1	-16.8	0	0.3	0	1	-0.1
18	LL3_Roof	139	2	-16.8	0	-0.4	0	1	-0.1
19	LL3_Roof	140	0	-16.8	0	-0.4	0	1	-0.1
20	LL3_Roof	140	1	-16.8	0	-0.6	0	0.6	-0.1
21	LL3_Roof	140	2	-16.8	0	-0.8	0	0.2	-0.1
22	LL3_Roof	142	0	-17.4	0	2	0	-3	-0.1
23	LL3_Roof	142	1	-17.4	0	1.6	0	-1.2	-0.1
24	LL3_Roof	142	2	-17.4	0	1.3	0	0.3	-0.1
25	LL3_Roof	143	0	-17.4	0	1.3	0	0.3	-0.1
26	LL3_Roof	143	1	-17.4	0	0.6	0	2.3	-0.1
27	LL3_Roof	143	2	-17.4	0	0	0	2.9	-0.1
28	LL3_Roof	144	0	-17.4	0	0	0	2.9	-0.1
29	LL3_Roof	144	1	-17.4	0	-0.7	0	2	-0.1
30	LL3_Roof	144	2	-17.4	0	-1.5	0	-0.4	-0.1
31	LL3_Roof	145	0	-17.4	0	-1.5	0	-0.4	-0.1
32	LL3_Roof	145	1	-17.4	0	-1.7	0	-1.4	-0.1
33	LL3_Roof	145	2	-17.4	0	-1.9	0	-2.5	-0.1
34	LL3_Roof	147	0	-15	0	2	0	-3.1	-0.1
35	LL3_Roof	147	1	-15	0	1.6	0	-1.1	-0.1
36	LL3_Roof	147	2	-15	0	1.3	0	0.5	-0.1
37	LL3_Roof	148	0	-15	0	1.3	0	0.5	-0.1
38	LL3_Roof	148	1	-15	0	0.6	0	2.4	-0.1
39	LL3_Roof	148	2	-15	0	0	0	3	0
40	LL3_Roof	149	0	-15	0	0	0	3	0
41	LL3_Roof	149	1	-15	0	-0.7	0	2.2	0
42	LL3_Roof	149	2	-15	0	-1.4	0	-0.1	0
43	LL3_Roof	150	0	-15	0	-1.4	0	-0.1	0
44	LL3_Roof	150	1	-15	0	-1.6	0	-1.1	0
45	LL3_Roof	150	2	-15	0	-1.8	0	-2.2	0
46	LL3_Roof	152	0	-10.8	0	1.1	0	0.3	0
47	LL3_Roof	152	1	-10.8	0	0.7	0	1.3	0
48	LL3_Roof	152	2	-10.8	0	0.3	0	1.9	0
49	LL3_Roof	153	0	-10.8	0	0.3	0	1.9	0
50	LL3_Roof	153	1	-10.8	0	-0.3	0	1.9	0
51	LL3_Roof	153	2	-10.8	0	-0.9	0	0.7	0
52	LL3_Roof	154	0	-10.8	0	-0.9	0	0.7	0
53	LL3_Roof	154	1	-10.8	0	-1.6	0	-2	0
54	LL3_Roof	154	2	-10.7	0	-2.3	0	-6.2	0
55	LL3_Roof	155	0	-10.7	0	-2.3	0	-6.2	0
56	LL3_Roof	155	1	-10.7	0	-2.5	0	-7.8	0
57	LL3_Roof	155	2	-10.7	0	-2.7	0	-9.5	0
58	LL3_Roof	157	0	-1.9	0	3.2	0	-8.2	0
59	LL3_Roof	157	1	-1.8	0	2.8	0	-4.5	0
60	LL3_Roof	157	2	-1.8	0	2.4	0	-1.2	0
61	LL3_Roof	158	0	-1.8	0	2.4	0	-1.2	0
62	LL3_Roof	158	1	-1.8	0	1.1	0	5.7	0
63	LL3_Roof	158	2	-1.8	0	-0.2	0	7.4	0
64	LL3_Roof	159	0	-1.8	0	-0.2	0	7.4	0
65	LL3_Roof	159	1	-1.8	0	-1.5	0	3.8	0
66	LL3_Roof	159	2	-1.8	0	-2.9	0	-5.2	0

Load (Row) Number	User's Load ID	Member ID	Joint ID	Fx (kips)	Fy (kips)	Fz (kips)	Mx (ft*kip)	My (ft*kip)	Mz (ft*kip)
1	TU-	133	0	-316.2	0	-2.9	0	35.9	0.6
2	TU-	133	1	-316.2	0	-2.9	0	20.8	0.6
3	TU-	133	2	-316.2	0	-2.9	0	5.6	0.6
4	TU-	134	0	-316.2	0	-2.9	0	5.6	0.6
5	TU-	134	1	-316.2	0	-2.9	0	-9.5	0.5
6	TU-	134	2	-316.2	0	-2.9	0	-24.7	0.5
7	TU-	135	0	-316.2	0	-2.7	0	-24.7	0.5
8	TU-	135	1	-316.2	0	-2.7	0	-28.6	0.5
9	TU-	135	2	-316.2	0	-2.7	0	-32.4	0.5
10	TU-	137	0	-11.9	0	-6.3	0	33.4	0.5
11	TU-	137	1	-11.9	0	-6.3	0	28.9	0.5
12	TU-	137	2	-11.9	0	-6.3	0	24.3	0.5
13	TU-	138	0	-11.9	0	-6.3	0	24.3	0.5
14	TU-	138	1	-11.9	0	-6.3	0	10.7	0.4
15	TU-	138	2	-11.9	0	-6.3	0	-2.9	0.4
16	TU-	139	0	-11.9	0	-6.3	0	-2.9	0.4
17	TU-	139	1	-11.9	0	-6.3	0	-17.4	0.4
18	TU-	139	2	-11.9	0	-6.3	0	-31.9	0.4
19	TU-	140	0	-11.9	0	-6.3	0	-31.9	0.4
20	TU-	140	1	-11.9	0	-6.3	0	-35.8	0.4
21	TU-	140	2	-11.9	0	-6.3	0	-39.7	0.4
22	TU-	142	0	54.2	0	-2.6	0	5.7	0.4
23	TU-	142	1	54.2	0	-2.6	0	3.1	0.4
24	TU-	142	2	54.2	0	-2.6	0	0.5	0.4
25	TU-	143	0	54.2	0	-2.5	0	0.5	0.4
26	TU-	143	1	54.2	0	-2.5	0	-4.7	0.3
27	TU-	143	2	54.2	0	-2.5	0	-10	0.3
28	TU-	144	0	54.2	0	-2.6	0	-10	0.3
29	TU-	144	1	54.2	0	-2.6	0	-15.7	0.3
30	TU-	144	2	54.2	0	-2.6	0	-21.5	0.3
31	TU-	145	0	54.3	0	-2.4	0	-21.5	0.3
32	TU-	145	1	54.3	0	-2.4	0	-23	0.3
33	TU-	145	2	54.3	0	-2.4	0	-24.4	0.3
34	TU-	147	0	74.5	0	0.2	0	-16	0.3
35	TU-	147	1	74.5	0	0.2	0	-15.7	0.3
36	TU-	147	2	74.5	0	0.2	0	-15.5	0.3
37	TU-	148	0	74.5	0	0.3	0	-15.5	0.3
38	TU-	148	1	74.5	0	0.3	0	-14.9	0.2
39	TU-	148	2	74.5	0	0.3	0	-14.3	0.2
40	TU-	149	0	74.5	0	0.2	0	-14.3	0.2
41	TU-	149	1	74.5	0	0.2	0	-13.8	0.2
42	TU-	149	2	74.5	0	0.2	0	-13.3	0.2
43	TU-	150	0	74.5	0	0.4	0	-13.3	0.2
44	TU-	150	1	74.5	0	0.4	0	-13	0.2
45	TU-	150	2	74.5	0	0.4	0	-12.7	0.2
46	TU-	152	0	63.5	0	6.3	0	-48.5	0.2
47	TU-	152	1	63.5	0	6.3	0	-40.9	0.2
48	TU-	152	2	63.5	0	6.3	0	-33.4	0.2
49	TU-	153	0	63.5	0	6.4	0	-33.4	0.2
50	TU-	153	1	63.5	0	6.4	0	-21	0.2
51	TU-	153	2	63.5	0	6.4	0	-8.6	0.1
52	TU-	154	0	63.5	0	6.3	0	-8.6	0.1
53	TU-	154	1	63.5	0	6.3	0	4.9	0.1
54	TU-	154	2	63.5	0	6.3	0	18.4	0.1
55	TU-	155	0	63.5	0	6.5	0	18.4	0.1
56	TU-	155	1	63.5	0	6.5	0	22.6	0.1
57	TU-	155	2	63.5	0	6.5	0	26.8	0.1
58	TU-	157	0	15.5	0	5.3	0	-44.1	0.1
59	TU-	157	1	15.5	0	5.3	0	-37.3	0.1
60	TU-	157	2	15.5	0	5.3	0	-30.6	0.1
61	TU-	158	0	15.5	0	5.3	0	-30.6	0.1
62	TU-	158	1	15.5	0	5.3	0	-8.9	0.1
63	TU-	158	2	15.5	0	5.3	0	12.7	0
64	TU-	159	0	15.5	0	5.3	0	12.7	0
65	TU-	159	1	15.5	0	5.3	0	34.6	0
66	TU-	159	2	15.5	0	5.3	0	56.6	0

Load (Row) Number	User's Load ID	Member ID	Joint ID	Fx (kips)	Fy (kips)	Fz (kips)	Mx (ft*kip)	My (ft*kip)	Mz (ft*kip)
1	TU+	133	0	316.2	0	2.9	0	-35.9	-0.6
2	TU+	133	1	316.2	0	2.9	0	-20.8	-0.6
3	TU+	133	2	316.2	0	2.9	0	-5.6	-0.6
4	TU+	134	0	316.2	0	2.9	0	-5.6	-0.6
5	TU+	134	1	316.2	0	2.9	0	9.5	-0.5
6	TU+	134	2	316.2	0	2.9	0	24.7	-0.5
7	TU+	135	0	316.2	0	2.7	0	24.7	-0.5
8	TU+	135	1	316.2	0	2.7	0	28.6	-0.5
9	TU+	135	2	316.2	0	2.7	0	32.4	-0.5
10	TU+	137	0	11.9	0	6.3	0	-33.4	-0.5
11	TU+	137	1	11.9	0	6.3	0	-28.9	-0.5
12	TU+	137	2	11.9	0	6.3	0	-24.3	-0.5
13	TU+	138	0	11.9	0	6.3	0	-24.3	-0.5
14	TU+	138	1	11.9	0	6.3	0	-10.7	-0.4
15	TU+	138	2	11.9	0	6.3	0	2.9	-0.4
16	TU+	139	0	11.9	0	6.3	0	2.9	-0.4
17	TU+	139	1	11.9	0	6.3	0	17.4	-0.4
18	TU+	139	2	11.9	0	6.3	0	31.9	-0.4
19	TU+	140	0	11.9	0	6.3	0	31.9	-0.4
20	TU+	140	1	11.9	0	6.3	0	35.8	-0.4
21	TU+	140	2	11.9	0	6.3	0	39.7	-0.4
22	TU+	142	0	-54.2	0	2.6	0	-5.7	-0.4
23	TU+	142	1	-54.2	0	2.6	0	-3.1	-0.4
24	TU+	142	2	-54.2	0	2.6	0	-0.5	-0.4
25	TU+	143	0	-54.2	0	2.5	0	-0.5	-0.4
26	TU+	143	1	-54.2	0	2.5	0	4.7	-0.3
27	TU+	143	2	-54.2	0	2.5	0	10	-0.3
28	TU+	144	0	-54.2	0	2.6	0	10	-0.3
29	TU+	144	1	-54.2	0	2.6	0	15.7	-0.3
30	TU+	144	2	-54.2	0	2.6	0	21.5	-0.3
31	TU+	145	0	-54.3	0	2.4	0	21.5	-0.3
32	TU+	145	1	-54.3	0	2.4	0	23	-0.3
33	TU+	145	2	-54.3	0	2.4	0	24.4	-0.3
34	TU+	147	0	-74.5	0	-0.2	0	16	-0.3
35	TU+	147	1	-74.5	0	-0.2	0	15.7	-0.3
36	TU+	147	2	-74.5	0	-0.2	0	15.5	-0.3
37	TU+	148	0	-74.5	0	-0.3	0	15.5	-0.3
38	TU+	148	1	-74.5	0	-0.3	0	14.9	-0.2
39	TU+	148	2	-74.5	0	-0.3	0	14.3	-0.2
40	TU+	149	0	-74.5	0	-0.2	0	14.3	-0.2
41	TU+	149	1	-74.5	0	-0.2	0	13.8	-0.2
42	TU+	149	2	-74.5	0	-0.2	0	13.3	-0.2
43	TU+	150	0	-74.5	0	-0.4	0	13.3	-0.2
44	TU+	150	1	-74.5	0	-0.4	0	13	-0.2
45	TU+	150	2	-74.5	0	-0.4	0	12.7	-0.2
46	TU+	152	0	-63.5	0	-6.3	0	48.5	-0.2
47	TU+	152	1	-63.5	0	-6.3	0	40.9	-0.2
48	TU+	152	2	-63.5	0	-6.3	0	33.4	-0.2
49	TU+	153	0	-63.5	0	-6.4	0	33.4	-0.2
50	TU+	153	1	-63.5	0	-6.4	0	21	-0.2
51	TU+	153	2	-63.5	0	-6.4	0	8.6	-0.1
52	TU+	154	0	-63.5	0	-6.3	0	8.6	-0.1
53	TU+	154	1	-63.5	0	-6.3	0	-4.9	-0.1
54	TU+	154	2	-63.5	0	-6.3	0	-18.4	-0.1
55	TU+	155	0	-63.5	0	-6.5	0	-18.4	-0.1
56	TU+	155	1	-63.5	0	-6.5	0	-22.6	-0.1
57	TU+	155	2	-63.5	0	-6.5	0	-26.8	-0.1
58	TU+	157	0	-15.5	0	-5.3	0	44.1	-0.1
59	TU+	157	1	-15.5	0	-5.3	0	37.3	-0.1
60	TU+	157	2	-15.5	0	-5.3	0	30.6	-0.1
61	TU+	158	0	-15.5	0	-5.3	0	30.6	-0.1
62	TU+	158	1	-15.5	0	-5.3	0	8.9	-0.1
63	TU+	158	2	-15.5	0	-5.3	0	-12.7	0
64	TU+	159	0	-15.5	0	-5.3	0	-12.7	0
65	TU+	159	1	-15.5	0	-5.3	0	-34.6	0
66	TU+	159	2	-15.5	0	-5.3	0	-56.6	0

Load (Row) Number	User's Load ID	Member ID	Joint ID	Fx (kips)	Fy (kips)	Fz (kips)	Mx (ft*kip)	My (ft*kip)	Mz (ft*kip)
1	TU+Temp. Diff.	133	0	541.4	0	5.7	0	-72.9	-1.2
2	TU+Temp. Diff.	133	1	541.4	0	5.7	0	-42.4	-1.1
3	TU+Temp. Diff.	133	2	541.4	0	5.7	0	-11.9	-1.1
4	TU+Temp. Diff.	134	0	541.4	0	5.8	0	-11.9	-1.1
5	TU+Temp. Diff.	134	1	541.4	0	5.8	0	18.6	-1
6	TU+Temp. Diff.	134	2	541.4	0	5.8	0	49.1	-0.9
7	TU+Temp. Diff.	135	0	541.4	0	5.5	0	49.1	-0.9
8	TU+Temp. Diff.	135	1	541.4	0	5.5	0	56.9	-0.9
9	TU+Temp. Diff.	135	2	541.4	0	5.5	0	64.7	-0.9
10	TU+Temp. Diff.	137	0	63.5	0	9.8	0	-49.6	-0.9
11	TU+Temp. Diff.	137	1	63.5	0	9.8	0	-42.5	-0.9
12	TU+Temp. Diff.	137	2	63.5	0	9.8	0	-35.5	-0.9
13	TU+Temp. Diff.	138	0	63.5	0	9.8	0	-35.5	-0.9
14	TU+Temp. Diff.	138	1	63.5	0	9.8	0	-14.3	-0.8
15	TU+Temp. Diff.	138	2	63.5	0	9.8	0	7	-0.8
16	TU+Temp. Diff.	139	0	63.5	0	9.8	0	7	-0.8
17	TU+Temp. Diff.	139	1	63.5	0	9.8	0	29.5	-0.8
18	TU+Temp. Diff.	139	2	63.5	0	9.8	0	52.1	-0.7
19	TU+Temp. Diff.	140	0	63.5	0	9.9	0	52.1	-0.7
20	TU+Temp. Diff.	140	1	63.5	0	9.9	0	58.2	-0.7
21	TU+Temp. Diff.	140	2	63.5	0	9.9	0	64.3	-0.7
22	TU+Temp. Diff.	142	0	-63.2	0	6.4	0	-23.4	-0.7
23	TU+Temp. Diff.	142	1	-63.2	0	6.4	0	-16.9	-0.7
24	TU+Temp. Diff.	142	2	-63.2	0	6.4	0	-10.4	-0.7
25	TU+Temp. Diff.	143	0	-63.2	0	6.3	0	-10.4	-0.7
26	TU+Temp. Diff.	143	1	-63.2	0	6.3	0	2.7	-0.7
27	TU+Temp. Diff.	143	2	-63.2	0	6.3	0	15.8	-0.6
28	TU+Temp. Diff.	144	0	-63.2	0	6.4	0	15.8	-0.6
29	TU+Temp. Diff.	144	1	-63.2	0	6.4	0	30.1	-0.6
30	TU+Temp. Diff.	144	2	-63.2	0	6.4	0	44.4	-0.6
31	TU+Temp. Diff.	145	0	-63.2	0	6.2	0	44.4	-0.6
32	TU+Temp. Diff.	145	1	-63.2	0	6.2	0	48.1	-0.6
33	TU+Temp. Diff.	145	2	-63.2	0	6.2	0	51.9	-0.5
34	TU+Temp. Diff.	147	0	-119.2	0	1.1	0	21.3	-0.5
35	TU+Temp. Diff.	147	1	-119.2	0	1.1	0	22.6	-0.5
36	TU+Temp. Diff.	147	2	-119.2	0	1.1	0	23.9	-0.5
37	TU+Temp. Diff.	148	0	-119.2	0	1.1	0	23.9	-0.5
38	TU+Temp. Diff.	148	1	-119.2	0	1.1	0	26	-0.5
39	TU+Temp. Diff.	148	2	-119.2	0	1.1	0	28.2	-0.4
40	TU+Temp. Diff.	149	0	-119.2	0	1.2	0	28.2	-0.4
41	TU+Temp. Diff.	149	1	-119.2	0	1.2	0	30.7	-0.4
42	TU+Temp. Diff.	149	2	-119.2	0	1.2	0	33.2	-0.4
43	TU+Temp. Diff.	150	0	-119.2	0	0.9	0	33.2	-0.4
44	TU+Temp. Diff.	150	1	-119.2	0	0.9	0	33.8	-0.4
45	TU+Temp. Diff.	150	2	-119.2	0	0.9	0	34.3	-0.4
46	TU+Temp. Diff.	152	0	-114.7	0	-11.3	0	91.2	-0.4
47	TU+Temp. Diff.	152	1	-114.7	0	-11.3	0	77.6	-0.3
48	TU+Temp. Diff.	152	2	-114.7	0	-11.3	0	64	-0.3
49	TU+Temp. Diff.	153	0	-114.7	0	-11.4	0	64	-0.3
50	TU+Temp. Diff.	153	1	-114.7	0	-11.4	0	41.8	-0.3
51	TU+Temp. Diff.	153	2	-114.7	0	-11.4	0	19.6	-0.3
52	TU+Temp. Diff.	154	0	-114.7	0	-11.3	0	19.6	-0.3
53	TU+Temp. Diff.	154	1	-114.7	0	-11.3	0	-4.5	-0.2
54	TU+Temp. Diff.	154	2	-114.7	0	-11.3	0	-28.6	-0.2
55	TU+Temp. Diff.	155	0	-114.7	0	-11.6	0	-28.6	-0.2
56	TU+Temp. Diff.	155	1	-114.7	0	-11.6	0	-36.1	-0.2
57	TU+Temp. Diff.	155	2	-114.7	0	-11.6	0	-43.7	-0.2
58	TU+Temp. Diff.	157	0	-31.6	0	-10.9	0	91.6	-0.2
59	TU+Temp. Diff.	157	1	-31.6	0	-10.9	0	77.8	-0.2
60	TU+Temp. Diff.	157	2	-31.6	0	-10.9	0	64	-0.2
61	TU+Temp. Diff.	158	0	-31.6	0	-10.9	0	64	-0.2
62	TU+Temp. Diff.	158	1	-31.6	0	-10.9	0	19.8	-0.1
63	TU+Temp. Diff.	158	2	-31.6	0	-10.9	0	-24.4	-0.1
64	TU+Temp. Diff.	159	0	-31.6	0	-10.9	0	-24.4	-0.1
65	TU+Temp. Diff.	159	1	-31.6	0	-10.9	0	-69.3	-0.1
66	TU+Temp. Diff.	159	2	-31.6	0	-10.9	0	-114.1	0

PT Column: AASHTO LRFD Column Analysis
Figg Bridge Engineers, Inc.
Short Column Analysis - Individual Load Cases
File Name: BS_Canopy_STRI_No PT Axial.ptc

Short Column Analysis - Individual Load Case Results

Load No.	Cross Section ID	Pu (kips)	Mux (ft*kip)	Muy (ft*kip)	Mu (ft*kip)	ϕMn (ft*kip)	ϕMn/Mu
1	BS_Canopy	-948.1	-262.5	-4.1	262.5	1175.6	4.478
2	BS_Canopy	268.9	66.6	-284.6	292.3	5161.3	17.658
3	BS_Canopy	325.4	-370.9	-4.9	370.9	1522.5	4.105
4	BS_Canopy	-314.7	-239.1	1346.8	1367.9	6862.0	5.017
5	BS_Canopy	550.8	282.9	-5.7	283.0	1386.6	4.900
6	BS_Canopy	-257.9	-159.9	1348.2	1357.6	9382.0	6.910
7	BS_Canopy	291.3	-373.0	-5.1	373.0	1515.6	4.063
8	BS_Canopy	-257.9	-159.9	1348.2	1357.6	9382.0	6.910
9	BS_Canopy	-743.5	-293.5	1345.9	1377.5	5297.9	3.846
10	BS_Canopy	759.3	153.9	-3.8	153.9	1431.6	9.299
11	BS_Canopy	-314.7	-239.1	1346.8	1367.9	6862.0	5.017
12	BS_Canopy	356.8	-140.9	-1.6	140.9	1528.8	10.849
13	BS_Canopy	165.2	-40.2	-197.7	201.7	6698.4	33.202
14	BS_Canopy	291.3	-373.0	-5.1	373.0	1515.6	4.063
15	BS_Canopy	518.3	-96.5	-319.2	333.5	5048.3	15.139
16	BS_Canopy	394.1	0.0	-3.9	3.9	20161.5	5169.618
17	BS_Canopy	-217.9	267.3	0.0	267.3	1183.8	4.429
18	BS_Canopy	98.6	0.4	-0.6	0.7	2231.1	3093.922

MIN C/D = 3.85

Section ID: BS_Canopy

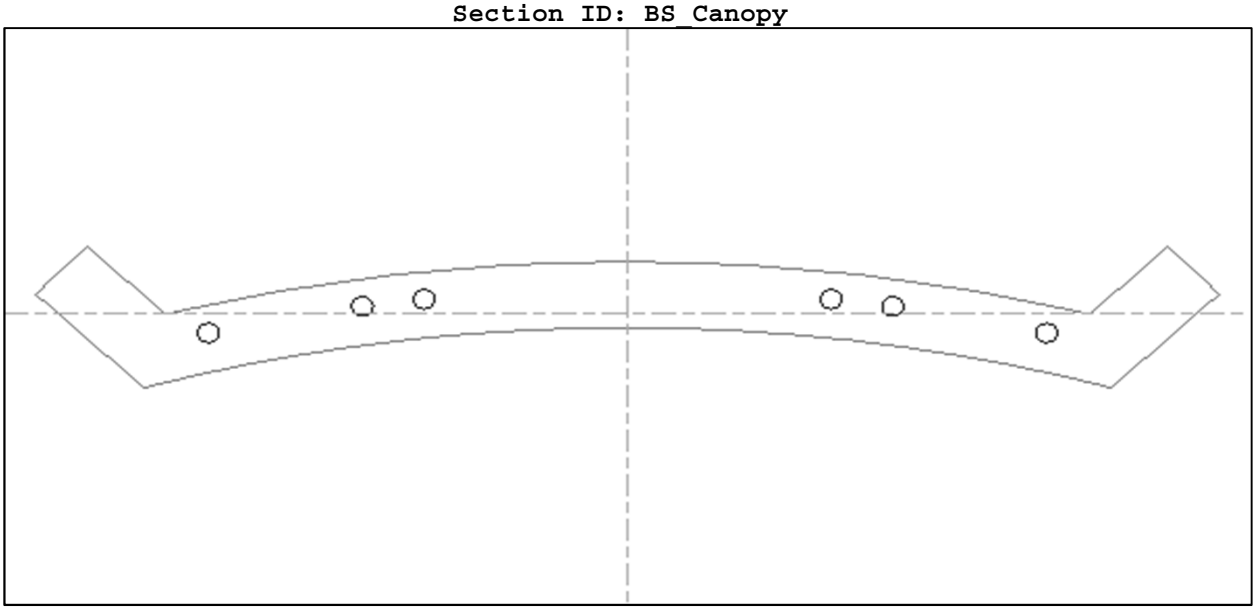

Material Properties

f'c (ksi)	8.5	Strain @ Ult.	0.003
f''c (ksi)	7.12	Strain @ Max.	0.0024
fy (ksi)	60	E Conc. (ksi)	4781
fr (ksi)	0.7	E Rebar (ksi)	29000
Tendon fpu (ksi)	270	E Tendon (ksi)	28500
PT Bar fpu (ksi)	150	E PT Bar (ksi)	29000
Gamma	0.15		

Section Properties

Ix (in^4)	55127	Iy (in^4)	7277555
Y top (in)	12.1712	X lft (in)	96
Y bot (in)	13.4389	X rgt (in)	96
Area (in^2)	2357.85	Ixy (in^4)	0

Cross Section Coordinates

** Exterior Boundary Coordinates **

Point No.	X (in)	Y (in)	Point No.	X (in)	Y (in)
1	-96	3.55	2	-87.65	12.17
3	-75	-0.08	4	75	-0.08
5	87.65	12.17	6	96	3.55
7	78.45	-13.44	8	10.5	-2.74
9	-10.5	-2.74	10	-78.45	-13.44

Tendon Information

Tendon No.	X (in)	Y (in)	Dia. (in)	Area (in^2)	Fsi (ksi)
1	-33	2.6	3.5	2.6	216
2	-43	1.3	3.5	2.6	216
3	-68	-3.49	3.5	2.6	216
4	33	2.6	3.5	2.6	216
5	43	1.3	3.5	2.6	216
6	68	-3.49	3.5	2.6	216

Truss Diagonals - Ultimate Moment Calculations

Selected Limit States

STR 1 - STRENGTH I
STR 3 - STRENGTH III
STR 5 - STRENGTH V

	Combinded Results											
	Max/ Min ID	**Combo ID**	**Fx (kips)**	**Fy (kips)**	**Fz (kips)**	**Mx (ft*kip)**	**My (ft*kip)**	**Mz (ft*kip)**	**Mxy (ft*kip)**	**Mxz (ft*kip)**	**Myz (ft*kip)**
	Max Fx	STR 1/ 50	99.7	0.0	-69.0	0.1	561.8	0.0	561.8	0.1	561.8
	Max Fy	STR 1/ 9	73.9	0.7	-3.1	0.7	36.3	9.3	36.3	9.3	37.5
	Max Fz	STR 3/ 70	63.9	-33.3	10.7	-12.1	-79.3	-481.6	80.2	481.8	488.1
	Max Mx	STR 1/ 9	73.9	0.7	-3.1	0.7	36.3	9.3	36.3	9.3	37.5
	Max My	STR 1/ 47	96.5	0.0	-97.7	0.1	889.7	0.2	889.7	0.2	889.7
Load No.	Max Mz	STR 1/ 9	73.9	0.7	-3.1	0.7	36.3	9.3	36.3	9.3	37.5
1	Max Mxy	STR 1/ 47	96.5	0.0	-97.7	0.1	889.7	0.2	889.7	0.2	889.7
	Max Mxz	STR 3/ 130	42.7	-33.3	6.4	-12.1	-35.3	-481.6	37.3	481.8	482.9
Member	Max Myz	STR 1/ 47	96.5	0.0	-97.7	0.1	889.7	0.2	889.7	0.2	889.7
702	Min Fx	STR 3/ 190	41.8	-33.3	10.7	-12.1	-79.3	-481.6	80.2	481.8	488.1
	Min Fy	STR 3/ 10	64.7	-33.3	6.4	-12.1	-35.3	-481.6	37.3	481.8	482.9
Joint	Min Fz	STR 1/ 47	96.5	0.0	-97.7	0.1	889.7	0.2	889.7	0.2	889.7
701	Min Mx	STR 3/ 130	42.7	-33.3	6.4	-12.1	-35.3	-481.6	37.3	481.8	482.9
	Min My	STR 3/ 70	63.9	-33.3	10.7	-12.1	-79.3	-481.6	80.2	481.8	488.1
	Min Mz	STR 3/ 10	64.7	-33.3	6.4	-12.1	-35.3	-481.6	37.3	481.8	482.9
	Min Mxy	STR 5/ 1043	73.3	-3.1	0.1	-1.4	0.5	-43.5	1.5	43.5	43.5
	Min Mxz	STR 1/ 55	58.9	0.0	-36.8	0.1	384.2	0.0	384.2	0.1	384.2
	Min Myz	STR 1/ 114	73.4	0.0	-0.2	0.1	5.8	0.0	5.8	0.1	5.8
	Max Fx	STR 3/ 190	-32.6	31.1	-10.7	12.1	-60.9	59.4	62.1	60.6	85.1
	Max Fy	STR 3/ 10	-51.9	31.1	-6.4	12.1	-49.1	59.4	50.6	60.6	77.0
	Max Fz	STR 1/ 47	-83.6	0.0	97.8	-0.1	390.2	0.0	390.2	0.1	390.2
	Max Mx	STR 3/ 130	-33.4	31.1	-6.4	12.1	-49.1	59.4	50.6	60.6	77.0
	Max My	STR 1/ 47	-83.6	0.0	97.8	-0.1	390.2	0.0	390.2	0.1	390.2
Load No.	Max Mz	STR 3/ 10	-51.9	31.1	-6.4	12.1	-49.1	59.4	50.6	60.6	77.0
2	Max Mxy	STR 1/ 47	-83.6	0.0	97.8	-0.1	390.2	0.0	390.2	0.1	390.2
	Max Mxz	STR 3/ 130	-33.4	31.1	-6.4	12.1	-49.1	59.4	50.6	60.6	77.0
Member	Max Myz	STR 1/ 47	-83.6	0.0	97.8	-0.1	390.2	0.0	390.2	0.1	390.2
702	Min Fx	STR 1/ 50	-86.8	0.0	69.1	-0.1	342.4	0.0	342.4	0.1	342.4
	Min Fy	STR 1/ 9	-61.0	-0.7	3.1	-0.7	3.4	-0.7	3.5	1.0	3.5
Joint	Min Fz	STR 3/ 70	-51.0	31.1	-10.7	12.1	-60.9	59.4	62.1	60.6	85.1
702	Min Mx	STR 1/ 9	-61.0	-0.7	3.1	-0.7	3.4	-0.7	3.5	1.0	3.5
	Min My	STR 3/ 70	-51.0	31.1	-10.7	12.1	-60.9	59.4	62.1	60.6	85.1
	Min Mz	STR 1/ 7	-64.7	17.2	20.9	5.3	54.3	-10.7	54.6	11.9	55.4
	Min Mxy	STR 5/ 43	-60.6	0.6	1.9	0.3	-1.1	1.0	1.1	1.0	1.4
	Min Mxz	STR 1/ 55	-49.6	0.0	36.8	-0.1	98.8	0.0	98.8	0.1	98.8
	Min Myz	STR 5/ 43	-60.6	0.6	1.9	0.3	-1.1	1.0	1.1	1.0	1.4

	Combinded Results											
	Max/ Min ID	**Combo ID**	**Fx (kips)**	**Fy (kips)**	**Fz (kips)**	**Mx (ft*kip)**	**My (ft*kip)**	**Mz (ft*kip)**	**Mxy (ft*kip)**	**Mxz (ft*kip)**	**Myz (ft*kip)**
	Max Fx	STR 1/ 47	3158.5	0.0	1.2	-0.1	414.1	0.1	414.1	0.2	414.1
	Max Fy	STR 1/ 1	2648.3	0.0	0.7	-0.1	432.8	0.1	432.8	0.2	432.8
	Max Fz	STR 1/ 148	2499.4	0.0	4.0	-0.1	327.0	0.1	327.0	0.2	327.0
	Max Mx	STR 3/ 130	1384.4	-5.5	2.3	101.4	249.1	-95.5	269.0	139.3	266.8
	Max My	STR 1/ 20	2974.2	0.0	0.9	-0.1	436.7	0.1	436.7	0.2	436.7
Load No.	Max Mz	STR 1/ 9	2123.7	0.0	2.6	-2.1	362.8	2.2	362.8	3.0	362.8
3	Max Mxy	STR 1/ 20	2974.2	0.0	0.9	-0.1	436.7	0.1	436.7	0.2	436.7
	Max Mxz	STR 3/ 130	1384.4	-5.5	2.3	101.4	249.1	-95.5	269.0	139.3	266.8
Member	Max Myz	STR 1/ 20	2974.2	0.0	0.9	-0.1	436.7	0.1	436.7	0.2	436.7
705	Min Fx	STR 3/ 190	1320.4	-5.5	2.6	101.4	240.0	-95.5	260.5	139.3	258.3
	Min Fy	STR 3/ 10	2033.4	-5.5	2.5	101.4	353.8	-95.5	368.0	139.3	366.4
Joint	Min Fz	STR 1/ 55	1999.3	0.0	0.5	-0.1	328.1	0.1	328.1	0.1	328.1
703	Min Mx	STR 1/ 9	2123.7	0.0	2.6	-2.1	362.8	2.2	362.8	3.0	362.8
	Min My	STR 3/ 220	1664.2	-5.5	3.2	101.4	215.5	-95.5	238.1	139.3	235.7
	Min Mz	STR 3/ 130	1384.4	-5.5	2.3	101.4	249.1	-95.5	269.0	139.3	266.8
	Min Mxy	STR 5/ 1857	1855.0	-0.4	3.8	7.0	221.8	-6.4	221.9	9.5	221.9
	Min Mxz	STR 1/ 55	1999.3	0.0	0.5	-0.1	328.1	0.1	328.1	0.1	328.1
	Min Myz	STR 5/ 1857	1855.0	-0.4	3.8	7.0	221.8	-6.4	221.9	9.5	221.9
	Max Fx	STR 3/ 190	-1311.8	0.6	16.2	-101.4	-42.2	8.1	109.8	101.7	42.9
	Max Fy	STR 1/ 8	-2438.2	2.6	24.6	-24.7	-65.2	-27.1	69.7	36.7	70.6
	Max Fz	STR 1/ 1	-2636.5	0.0	25.5	0.1	-70.1	0.0	70.1	0.1	70.1
	Max Mx	STR 1/ 9	-2111.8	0.0	23.5	2.1	-57.3	0.2	57.3	2.1	57.3
	Max My	STR 3/ 195	-1563.5	-0.1	17.6	-31.7	-16.1	7.1	35.6	32.5	17.6
Load No.	Max Mz	STR 3/ 2	-2135.9	-0.6	23.9	-69.2	-51.3	13.3	86.1	70.4	53.0
4	Max Mxy	STR 3/ 50	-2262.0	0.6	23.4	-101.4	-54.1	8.1	114.9	101.7	54.7
	Max Mxz	STR 3/ 130	-1375.8	0.6	16.5	-101.4	-43.8	8.1	110.5	101.7	44.5
Member	Max Myz	STR 3/ 49	-2460.6	-0.1	21.6	-31.7	-89.7	7.1	95.1	32.5	90.0
705	Min Fx	STR 1/ 47	-3146.6	0.0	25.0	0.1	-65.0	0.0	65.0	0.1	65.0
	Min Fy	STR 3/ 1	-2154.5	-0.6	23.5	-74.1	-58.2	13.2	94.2	75.2	59.6
Joint	Min Fz	STR 3/ 219	-1854.3	-0.1	13.9	-31.7	-68.6	7.1	75.6	32.5	69.0
704	Min Mx	STR 3/ 130	-1375.8	0.6	16.5	-101.4	-43.8	8.1	110.5	101.7	44.5
	Min My	STR 3/ 49	-2460.6	-0.1	21.6	-31.7	-89.7	7.1	95.1	32.5	90.0
	Min Mz	STR 1/ 8	-2438.2	2.6	24.6	-24.7	-65.2	-27.1	69.7	36.7	70.6
	Min Mxy	STR 5/ 1735	-1549.8	0.0	16.2	-10.6	-33.8	1.2	35.4	10.7	33.8
	Min Mxz	STR 1/ 55	-1990.8	0.0	18.3	0.1	-68.2	0.0	68.2	0.1	68.2
	Min Myz	STR 3/ 195	-1563.5	-0.1	17.6	-31.7	-16.1	7.1	35.6	32.5	17.6

	Combinded Results											
	Max/ Min ID	**Combo ID**	**Fx (kips)**	**Fy (kips)**	**Fz (kips)**	**Mx (ft*kip)**	**My (ft*kip)**	**Mz (ft*kip)**	**Mxy (ft*kip)**	**Mxz (ft*kip)**	**Myz (ft*kip)**
	Max Fx	STR 3/ 200	-399.3	-3.6	-5.7	15.7	54.5	-97.8	56.7	99.0	111.9
	Max Fy	STR 1/ 7	-788.0	5.8	-13.5	-12.6	128.0	74.6	128.6	75.6	148.1
	Max Fz	STR 1/ 165	-419.1	0.0	2.9	0.0	14.0	0.0	14.0	0.0	14.0
	Max Mx	STR 3/ 10	-643.0	-3.6	-7.8	15.7	88.3	-97.8	89.6	99.1	131.8
	Max My	STR 1/ 47	-955.9	0.0	-33.1	0.0	242.9	0.1	242.9	0.1	242.9
Load No.	Max Mz	STR 1/ 34	-784.9	5.8	-21.5	-12.6	167.8	74.7	168.2	75.7	183.6
5	Max Mxy	STR 1/ 47	-955.9	0.0	-33.1	0.0	242.9	0.1	242.9	0.1	242.9
	Max Mxz	STR 3/ 121	-471.8	-6.9	-0.4	13.9	35.1	-108.8	37.8	109.7	114.3
Member	Max Myz	STR 1/ 47	-955.9	0.0	-33.1	0.0	242.9	0.1	242.9	0.1	242.9
708	Min Fx	STR 1/ 20	-959.0	0.0	-25.1	0.0	203.1	0.0	203.1	0.0	203.1
	Min Fy	STR 3/ 1	-685.0	-6.9	-9.5	13.9	101.7	-108.8	102.6	109.6	148.9
Joint	Min Fz	STR 1/ 47	-955.9	0.0	-33.1	0.0	242.9	0.1	242.9	0.1	242.9
705	Min Mx	STR 1/ 7	-788.0	5.8	-13.5	-12.6	128.0	74.6	128.6	75.6	148.1
	Min My	STR 1/ 165	-419.1	0.0	2.9	0.0	14.0	0.0	14.0	0.0	14.0
	Min Mz	STR 3/ 121	-471.8	-6.9	-0.4	13.9	35.1	-108.8	37.8	109.7	114.3
	Min Mxy	STR 1/ 165	-419.1	0.0	2.9	0.0	14.0	0.0	14.0	0.0	14.0
	Min Mxz	STR 1/ 55	-678.0	0.0	-8.3	0.0	87.8	0.0	87.8	0.0	87.8
	Min Myz	STR 1/ 165	-419.1	0.0	2.9	0.0	14.0	0.0	14.0	0.0	14.0
	Max Fx	STR 1/ 20	965.9	0.0	27.4	0.0	85.6	0.0	85.6	0.0	85.6
	Max Fy	STR 3/ 1	691.8	5.0	11.7	-13.9	15.3	43.8	20.6	46.0	46.4
	Max Fz	STR 1/ 47	962.8	0.0	35.4	0.0	133.9	0.0	133.9	0.0	133.9
	Max Mx	STR 1/ 7	794.9	-5.8	15.8	12.6	32.4	-11.9	34.8	17.3	34.5
	Max My	STR 1/ 47	962.8	0.0	35.4	0.0	133.9	0.0	133.9	0.0	133.9
Load No.	Max Mz	STR 3/ 10	649.8	1.8	10.0	-15.7	9.8	68.3	18.5	70.1	69.0
6	Max Mxy	STR 1/ 47	962.8	0.0	35.4	0.0	133.9	0.0	133.9	0.0	133.9
	Max Mxz	STR 3/ 10	649.8	1.8	10.0	-15.7	9.8	68.3	18.5	70.1	69.0
Member	Max Myz	STR 1/ 47	962.8	0.0	35.4	0.0	133.9	0.0	133.9	0.0	133.9
708	Min Fx	STR 3/ 200	404.3	1.8	7.3	-15.7	17.2	68.3	23.3	70.1	70.5
	Min Fy	STR 1/ 7	794.9	-5.8	15.8	12.6	32.4	-11.9	34.8	17.3	34.5
Joint	Min Fz	STR 1/ 165	424.0	0.0	-1.3	0.0	-35.8	0.0	35.8	0.0	35.8
706	Min Mx	STR 3/ 10	649.8	1.8	10.0	-15.7	9.8	68.3	18.5	70.1	69.0
	Min My	STR 1/ 165	424.0	0.0	-1.3	0.0	-35.8	0.0	35.8	0.0	35.8
	Min Mz	STR 1/ 8	807.7	-5.3	16.8	12.3	37.5	-12.3	39.5	17.3	39.5
	Min Mxy	STR 1/ 185	498.6	0.0	7.0	0.0	0.1	0.0	0.1	0.0	0.1
	Min Mxz	STR 1/ 1	898.0	0.0	19.6	0.0	49.6	0.0	49.6	0.0	49.6
	Min Myz	STR 1/ 185	498.6	0.0	7.0	0.0	0.1	0.0	0.1	0.0	0.1

	Combinded Results											
	Max/ Min ID	Combo ID	Fx (kips)	Fy (kips)	Fz (kips)	Mx (ft*kip)	My (ft*kip)	Mz (ft*kip)	Mxy (ft*kip)	Mxz (ft*kip)	Myz (ft*kip)
	Max Fx	STR 1/ 47	975.9	0.0	3.5	0.0	94.3	0.0	94.3	0.0	94.3
	Max Fy	STR 1/ 1	772.0	0.0	4.0	0.0	76.1	0.0	76.1	0.0	76.1
	Max Fz	STR 3/ 65	583.5	-1.0	5.1	11.6	56.5	-13.7	57.7	18.0	58.1
	Max Mx	STR 3/ 1	654.2	-3.1	4.5	25.6	60.5	-33.6	65.7	42.3	69.2
	Max My	STR 1/ 47	975.9	0.0	3.5	0.0	94.3	0.0	94.3	0.0	94.3
Load No.	Max Mz	STR 1/ 7	713.2	0.0	4.3	-19.1	68.4	12.8	71.0	23.0	69.6
7	Max Mxy	STR 1/ 47	975.9	0.0	3.5	0.0	94.3	0.0	94.3	0.0	94.3
	Max Mxz	STR 3/ 1	654.2	-3.1	4.5	25.6	60.5	-33.6	65.7	42.3	69.2
Member	Max Myz	STR 1/ 47	975.9	0.0	3.5	0.0	94.3	0.0	94.3	0.0	94.3
711	Min Fx	STR 1/ 165	324.7	0.0	3.3	0.0	43.3	0.0	43.3	0.0	43.3
	Min Fy	STR 3/ 1	654.2	-3.1	4.5	25.6	60.5	-33.6	65.7	42.3	69.2
Joint	Min Fz	STR 3/ 179	599.4	-1.0	2.2	11.6	65.5	-13.7	66.6	18.0	67.0
707	Min Mx	STR 1/ 7	713.2	0.0	4.3	-19.1	68.4	12.8	71.0	23.0	69.6
	Min My	STR 3/ 190	350.0	-2.9	3.4	25.6	41.1	-32.1	48.4	41.0	52.1
	Min Mz	STR 3/ 1	654.2	-3.1	4.5	25.6	60.5	-33.6	65.7	42.3	69.2
	Min Mxy	STR 1/ 165	324.7	0.0	3.3	0.0	43.3	0.0	43.3	0.0	43.3
	Min Mxz	STR 1/ 1	772.0	0.0	4.0	0.0	76.1	0.0	76.1	0.0	76.1
	Min Myz	STR 1/ 165	324.7	0.0	3.3	0.0	43.3	0.0	43.3	0.0	43.3
	Max Fx	STR 1/ 165	-319.0	0.0	8.0	0.0	17.8	0.0	17.8	0.0	17.8
	Max Fy	STR 1/ 1	-764.1	0.0	11.7	0.0	24.5	0.0	24.5	0.0	24.5
	Max Fz	STR 3/ 55	-739.9	-0.4	12.4	-11.6	31.0	5.9	33.1	13.0	31.6
	Max Mx	STR 1/ 7	-705.3	0.0	11.3	19.1	26.3	-12.4	32.5	22.8	29.1
	Max My	STR 3/ 65	-578.3	-0.4	11.9	-11.6	35.0	5.9	36.9	13.0	35.5
Load No.	Max Mz	STR 3/ 1	-646.3	-1.4	11.2	-25.6	28.0	12.2	38.0	28.4	30.6
8	Max Mxy	STR 3/ 70	-598.1	-1.5	10.9	-25.6	29.0	11.9	38.7	28.2	31.4
	Max Mxz	STR 3/ 1	-646.3	-1.4	11.2	-25.6	28.0	12.2	38.0	28.4	30.6
Member	Max Myz	STR 3/ 65	-578.3	-0.4	11.9	-11.6	35.0	5.9	36.9	13.0	35.5
711	Min Fx	STR 1/ 47	-968.0	0.0	12.1	0.0	20.4	0.0	20.4	0.0	20.4
	Min Fy	STR 3/ 10	-613.7	-1.5	11.0	-25.6	28.6	11.9	38.4	28.2	31.0
Joint	Min Fz	STR 3/ 189	-429.3	-0.4	7.1	-11.6	10.7	5.9	15.8	13.0	12.2
708	Min Mx	STR 3/ 1	-646.3	-1.4	11.2	-25.6	28.0	12.2	38.0	28.4	30.6
	Min My	STR 3/ 179	-590.9	-0.4	7.7	-11.6	6.7	5.9	13.4	13.0	8.9
	Min Mz	STR 1/ 8	-734.2	0.0	11.3	18.2	25.9	-12.8	31.7	22.2	28.9
	Min Mxy	STR 5/ 967	-687.2	-0.1	8.8	-2.1	8.8	1.2	9.0	2.4	8.9
	Min Mxz	STR 1/ 1	-764.1	0.0	11.7	0.0	24.5	0.0	24.5	0.0	24.5
	Min Myz	STR 5/ 967	-687.2	-0.1	8.8	-2.1	8.8	1.2	9.0	2.4	8.9

	Combinded Results											
	Max/ Min ID	**Combo ID**	**Fx (kips)**	**Fy (kips)**	**Fz (kips)**	**Mx (ft*kip)**	**My (ft*kip)**	**Mz (ft*kip)**	**Mxy (ft*kip)**	**Mxz (ft*kip)**	**Myz (ft*kip)**
	Max Fx	STR 3/ 195	-57.6	-1.3	12.7	-0.6	-92.0	-34.1	92.0	34.1	98.2
	Max Fy	STR 1/ 7	-241.8	15.6	5.1	-0.5	-51.4	194.2	51.4	194.2	200.8
	Max Fz	STR 5/ 763	-73.5	0.1	12.8	-0.4	-93.3	-3.1	93.3	3.2	93.4
	Max Mx	STR 3/ 10	-185.1	3.9	4.3	0.4	-46.4	-13.3	46.4	13.3	48.3
	Max My	STR 3/ 109	-212.9	-1.3	1.2	-0.6	-28.9	-34.1	28.9	34.1	44.7
Load No.	Max Mz	STR 1/ 7	-241.8	15.6	5.1	-0.5	-51.4	194.2	51.4	194.2	200.8
9	Max Mxy	STR 1/ 84	-74.2	0.0	12.8	0.0	-93.5	-0.1	93.5	0.1	93.5
	Max Mxz	STR 1/ 7	-241.8	15.6	5.1	-0.5	-51.4	194.2	51.4	194.2	200.8
Member	Max Myz	STR 1/ 88	-134.6	15.6	11.9	-0.5	-87.2	194.2	87.2	194.2	212.9
714	Min Fx	STR 1/ 11	-310.1	0.0	2.6	0.0	-37.2	-0.1	37.2	0.1	37.2
	Min Fy	STR 3/ 1	-197.6	-4.1	4.6	-0.8	-48.4	-78.4	48.4	78.4	92.1
Joint	Min Fz	STR 3/ 109	-212.9	-1.3	1.2	-0.6	-28.9	-34.1	28.9	34.1	44.7
709	Min Mx	STR 3/ 2	-191.7	-3.6	4.8	-1.0	-50.6	-72.1	50.6	72.1	88.1
	Min My	STR 1/ 84	-74.2	0.0	12.8	0.0	-93.5	-0.1	93.5	0.1	93.5
	Min Mz	STR 3/ 1	-197.6	-4.1	4.6	-0.8	-48.4	-78.4	48.4	78.4	92.1
	Min Mxy	STR 3/ 109	-212.9	-1.3	1.2	-0.6	-28.9	-34.1	28.9	34.1	44.7
	Min Mxz	STR 1/ 1	-285.9	0.0	5.4	0.0	-54.3	-0.1	54.3	0.1	54.3
	Min Myz	STR 5/ 1210	-277.8	0.0	1.9	-0.2	-32.6	-3.4	32.6	3.4	32.7
	Max Fx	STR 1/ 11	317.9	0.0	-2.5	0.0	6.4	0.0	6.4	0.0	6.4
	Max Fy	STR 3/ 1	205.3	2.1	-4.4	0.8	-4.7	41.6	4.8	41.6	41.8
	Max Fz	STR 1/ 128	304.1	0.0	-2.0	0.0	10.0	0.0	10.0	0.0	10.0
	Max Mx	STR 3/ 2	199.4	1.7	-4.4	1.0	-4.6	40.7	4.7	40.8	41.0
	Max My	STR 1/ 128	304.1	0.0	-2.0	0.0	10.0	0.0	10.0	0.0	10.0
Load No.	Max Mz	STR 3/ 10	192.8	-5.9	-4.1	-0.4	-3.9	71.1	3.9	71.1	71.2
10	Max Mxy	STR 1/ 84	79.8	0.0	-12.7	0.0	-57.3	0.0	57.3	0.0	57.3
	Max Mxz	STR 3/ 10	192.8	-5.9	-4.1	-0.4	-3.9	71.1	3.9	71.1	71.2
Member	Max Myz	STR 3/ 140	83.4	-5.9	-11.0	-0.4	-48.4	71.1	48.4	71.1	86.0
714	Min Fx	STR 3/ 195	63.2	0.7	-11.2	0.6	-48.7	22.4	48.7	22.4	53.6
	Min Fy	STR 1/ 7	249.6	-15.6	-5.0	0.5	-7.3	-9.5	7.3	9.5	12.0
Joint	Min Fz	STR 1/ 84	79.8	0.0	-12.7	0.0	-57.3	0.0	57.3	0.0	57.3
710	Min Mx	STR 3/ 10	192.8	-5.9	-4.1	-0.4	-3.9	71.1	3.9	71.1	71.2
	Min My	STR 1/ 84	79.8	0.0	-12.7	0.0	-57.3	0.0	57.3	0.0	57.3
	Min Mz	STR 1/ 8	257.6	-15.1	-4.1	0.5	-3.3	-10.7	3.3	10.7	11.2
	Min Mxy	STR 5/ 447	184.6	0.0	-3.8	0.1	0.0	1.4	0.1	1.4	1.4
	Min Mxz	STR 1/ 1	293.7	0.0	-5.3	0.0	-9.9	0.0	9.9	0.0	9.9
	Min Myz	STR 1/ 146	283.7	0.0	-3.6	0.0	-0.1	0.0	0.1	0.0	0.1

	Combinded Results											
	Max/ Min ID	**Combo ID**	**Fx (kips)**	**Fy (kips)**	**Fz (kips)**	**Mx (ft*kip)**	**My (ft*kip)**	**Mz (ft*kip)**	**Mxy (ft*kip)**	**Mxz (ft*kip)**	**Myz (ft*kip)**
	Max Fx	STR 3/ 89	-178.4	-0.8	2.9	9.0	56.7	-10.9	57.4	14.1	57.8
	Max Fy	STR 1/ 7	-318.7	1.8	3.3	-35.9	59.4	50.1	69.4	61.6	77.7
	Max Fz	STR 3/ 65	-281.2	-0.8	4.1	9.0	50.0	-10.9	50.8	14.1	51.2
	Max Mx	STR 3/ 1	-255.4	-2.7	3.5	18.3	53.8	-25.3	56.8	31.3	59.5
	Max My	STR 1/ 47	-386.4	0.0	2.9	0.0	70.4	0.0	70.4	0.0	70.4
Load No.	Max Mz	STR 1/ 7	-318.7	1.8	3.3	-35.9	59.4	50.1	69.4	61.6	77.7
11	Max Mxy	STR 1/ 53	-339.5	1.8	3.2	-35.4	63.9	48.7	73.0	60.1	80.3
	Max Mxz	STR 1/ 7	-318.7	1.8	3.3	-35.9	59.4	50.1	69.4	61.6	77.7
Member	Max Myz	STR 1/ 52	-356.1	1.8	3.2	-35.9	62.9	50.1	72.4	61.6	80.3
717	Min Fx	STR 1/ 82	-442.7	0.0	1.9	0.0	54.5	0.0	54.5	0.0	54.5
	Min Fy	STR 3/ 1	-255.4	-2.7	3.5	18.3	53.8	-25.3	56.8	31.3	59.5
Joint	Min Fz	STR 3/ 149	-204.6	-0.8	1.6	9.0	47.3	-10.9	48.2	14.1	48.6
711	Min Mx	STR 1/ 7	-318.7	1.8	3.3	-35.9	59.4	50.1	69.4	61.6	77.7
	Min My	STR 3/ 190	-215.5	-1.8	2.5	11.2	38.8	-7.4	40.4	13.4	39.5
	Min Mz	STR 3/ 1	-255.4	-2.7	3.5	18.3	53.8	-25.3	56.8	31.3	59.5
	Min Mxy	STR 5/ 1492	-282.2	-0.3	2.4	1.4	39.4	-1.7	39.4	2.2	39.4
	Min Mxz	STR 1/ 1	-382.3	0.0	3.1	0.0	65.0	0.0	65.0	0.0	65.0
	Min Myz	STR 5/ 1492	-282.2	-0.3	2.4	1.4	39.4	-1.7	39.4	2.2	39.4
	Max Fx	STR 1/ 82	448.5	0.0	7.8	0.0	15.7	0.0	15.7	0.0	15.7
	Max Fy	STR 1/ 1	390.3	0.0	10.3	0.0	20.9	0.0	20.9	0.0	20.9
	Max Fz	STR 3/ 35	337.6	-0.4	11.0	-9.0	26.6	4.5	28.1	10.0	27.0
	Max Mx	STR 1/ 7	326.7	-1.8	10.1	35.9	21.4	-7.7	41.8	36.7	22.7
	Max My	STR 3/ 65	287.0	-0.4	10.7	-9.0	27.9	4.5	29.3	10.0	28.2
Load No.	Max Mz	STR 3/ 10	231.0	-2.2	9.8	-11.2	22.8	11.9	25.4	16.3	25.7
12	Max Mxy	STR 1/ 115	309.9	-1.8	10.0	35.9	21.6	-7.7	41.9	36.7	22.9
	Max Mxz	STR 1/ 7	326.7	-1.8	10.1	35.9	21.4	-7.7	41.8	36.7	22.7
Member	Max Myz	STR 3/ 65	287.0	-0.4	10.7	-9.0	27.9	4.5	29.3	10.0	28.2
717	Min Fx	STR 3/ 89	188.7	-0.4	9.1	-9.0	15.9	4.5	18.2	10.0	16.5
	Min Fy	STR 3/ 10	231.0	-2.2	9.8	-11.2	22.8	11.9	25.4	16.3	25.7
Joint	Min Fz	STR 3/ 189	213.1	-0.4	6.4	-9.0	11.8	4.5	14.8	10.0	12.6
712	Min Mx	STR 3/ 1	263.4	-1.3	9.9	-18.3	22.1	8.3	28.7	20.1	23.6
	Min My	STR 3/ 179	267.3	-0.4	6.7	-9.0	10.3	4.5	13.6	10.0	11.2
	Min Mz	STR 1/ 8	310.1	-1.8	10.1	35.4	21.1	-8.8	41.1	36.4	22.8
	Min Mxy	STR 5/ 967	369.9	-0.1	7.8	-1.3	13.1	1.0	13.1	1.6	13.1
	Min Mxz	STR 1/ 1	390.3	0.0	10.3	0.0	20.9	0.0	20.9	0.0	20.9
	Min Myz	STR 3/ 179	267.3	-0.4	6.7	-9.0	10.3	4.5	13.6	10.0	11.2

	Combinded Results											
	Max/ Min ID	**Combo ID**	**Fx (kips)**	**Fy (kips)**	**Fz (kips)**	**Mx (ft*kip)**	**My (ft*kip)**	**Mz (ft*kip)**	**Mxy (ft*kip)**	**Mxz (ft*kip)**	**Myz (ft*kip)**
	Max Fx	STR 3/ 55	311.8	1.1	-26.9	-5.6	201.0	26.8	201.1	27.4	202.8
	Max Fy	STR 3/ 1	230.9	3.4	-25.2	-10.4	189.9	58.4	190.2	59.3	198.6
	Max Fz	STR 3/ 190	183.8	-5.6	-20.7	-1.1	153.5	-19.0	153.5	19.1	154.6
	Max Mx	STR 1/ 7	237.2	-16.8	-28.0	33.4	209.3	-206.9	212.0	209.5	294.3
	Max My	STR 1/ 46	306.5	0.0	-31.8	0.0	237.5	0.1	237.5	0.1	237.5
Load No.	Max Mz	STR 3/ 11	264.2	3.4	-26.0	-10.4	196.1	58.5	196.3	59.4	204.6
13	Max Mxy	STR 1/ 46	306.5	0.0	-31.8	0.0	237.5	0.1	237.5	0.1	237.5
	Max Mxz	STR 1/ 7	237.2	-16.8	-28.0	33.4	209.3	-206.9	212.0	209.5	294.3
Member	Max Myz	STR 1/ 52	300.2	-16.8	-29.0	33.4	218.2	-206.8	220.7	209.4	300.6
720	Min Fx	STR 3/ 189	181.0	1.1	-21.4	-5.6	161.6	26.7	161.7	27.3	163.8
	Min Fy	STR 1/ 7	237.2	-16.8	-28.0	33.4	209.3	-206.9	212.0	209.5	294.3
Joint	Min Fz	STR 1/ 46	306.5	0.0	-31.8	0.0	237.5	0.1	237.5	0.1	237.5
713	Min Mx	STR 3/ 1	230.9	3.4	-25.2	-10.4	189.9	58.4	190.2	59.3	198.6
	Min My	STR 3/ 190	183.8	-5.6	-20.7	-1.1	153.5	-19.0	153.5	19.1	154.6
	Min Mz	STR 1/ 7	237.2	-16.8	-28.0	33.4	209.3	-206.9	212.0	209.5	294.3
	Min Mxy	STR 3/ 190	183.8	-5.6	-20.7	-1.1	153.5	-19.0	153.5	19.1	154.6
	Min Mxz	STR 1/ 1	243.5	0.0	-30.8	0.0	228.6	0.0	228.6	0.0	228.6
	Min Myz	STR 3/ 190	183.8	-5.6	-20.7	-1.1	153.5	-19.0	153.5	19.1	154.6
	Max Fx	STR 3/ 189	-175.6	-0.4	25.1	5.6	148.3	-15.8	148.4	16.8	149.1
	Max Fy	STR 1/ 7	-229.0	16.8	31.1	-33.4	183.6	-17.5	186.6	37.7	184.4
	Max Fz	STR 1/ 46	-298.2	0.0	35.0	0.0	206.6	0.0	206.6	0.0	206.6
	Max Mx	STR 3/ 1	-222.7	-1.1	28.3	10.4	165.7	-29.3	166.0	31.0	168.3
	Max My	STR 1/ 46	-298.2	0.0	35.0	0.0	206.6	0.0	206.6	0.0	206.6
Load No.	Max Mz	STR 1/ 1	-235.3	0.0	33.9	0.0	201.2	0.0	201.2	0.0	201.2
14	Max Mxy	STR 1/ 46	-298.2	0.0	35.0	0.0	206.6	0.0	206.6	0.0	206.6
	Max Mxz	STR 3/ 10	-207.6	7.8	26.9	1.1	156.5	-69.7	156.5	69.7	171.3
Member	Max Myz	STR 1/ 46	-298.2	0.0	35.0	0.0	206.6	0.0	206.6	0.0	206.6
720	Min Fx	STR 3/ 55	-303.0	-0.4	28.7	5.6	168.6	-15.8	168.7	16.8	169.3
	Min Fy	STR 3/ 1	-222.7	-1.1	28.3	10.4	165.7	-29.3	166.0	31.0	168.3
Joint	Min Fz	STR 3/ 190	-177.8	7.8	23.0	1.1	136.5	-69.7	136.5	69.7	153.3
714	Min Mx	STR 1/ 7	-229.0	16.8	31.1	-33.4	183.6	-17.5	186.6	37.7	184.4
	Min My	STR 3/ 210	-192.7	7.8	23.0	1.1	136.2	-69.7	136.2	69.7	153.0
	Min Mz	STR 3/ 10	-207.6	7.8	26.9	1.1	156.5	-69.7	156.5	69.7	171.3
	Min Mxy	STR 3/ 210	-192.7	7.8	23.0	1.1	136.2	-69.7	136.2	69.7	153.0
	Min Mxz	STR 1/ 1	-235.3	0.0	33.9	0.0	201.2	0.0	201.2	0.0	201.2
	Min Myz	STR 3/ 205	-225.2	-0.4	23.7	5.6	142.9	-15.8	143.0	16.8	143.8

	Combinded Results											
	Max/ Min ID	**Combo ID**	**Fx (kips)**	**Fy (kips)**	**Fz (kips)**	**Mx (ft*kip)**	**My (ft*kip)**	**Mz (ft*kip)**	**Mxy (ft*kip)**	**Mxz (ft*kip)**	**Myz (ft*kip)**
	Max Fx	STR 3/ 190	-656.3	0.3	-0.5	6.4	41.5	17.1	42.0	18.3	44.9
	Max Fy	STR 1/ 7	-1125.4	5.1	-0.7	-41.5	59.9	95.9	72.9	104.5	113.1
	Max Fz	STR 3/ 74	-1013.5	-1.5	0.5	11.2	49.6	-14.8	50.8	18.6	51.7
	Max Mx	STR 3/ 1	-977.2	-2.4	-0.4	15.5	55.0	-21.4	57.2	26.5	59.0
	Max My	STR 1/ 11	-1294.2	0.0	-1.4	0.0	68.6	0.0	68.6	0.0	68.6
Load No.	Max Mz	STR 1/ 7	-1125.4	5.1	-0.7	-41.5	59.9	95.9	72.9	104.5	113.1
15	Max Mxy	STR 1/ 17	-1149.6	4.9	-0.9	-41.1	63.0	93.8	75.2	102.4	113.0
	Max Mxz	STR 1/ 7	-1125.4	5.1	-0.7	-41.5	59.9	95.9	72.9	104.5	113.1
Member	Max Myz	STR 1/ 16	-1153.1	5.1	-0.9	-41.5	62.3	95.9	74.8	104.5	114.4
723	Min Fx	STR 1/ 46	-1374.9	0.0	-1.0	0.0	63.6	0.0	63.6	0.0	63.6
	Min Fy	STR 3/ 1	-977.2	-2.4	-0.4	15.5	55.0	-21.4	57.2	26.5	59.0
Joint	Min Fz	STR 1/ 65	-1088.5	0.0	-1.8	0.0	58.3	0.0	58.3	0.0	58.3
715	Min Mx	STR 1/ 7	-1125.4	5.1	-0.7	-41.5	59.9	95.9	72.9	104.5	113.1
	Min My	STR 3/ 200	-705.9	0.3	-0.2	6.4	37.9	17.1	38.4	18.3	41.5
	Min Mz	STR 3/ 1	-977.2	-2.4	-0.4	15.5	55.0	-21.4	57.2	26.5	59.0
	Min Mxy	STR 3/ 200	-705.9	0.3	-0.2	6.4	37.9	17.1	38.4	18.3	41.5
	Min Mxz	STR 1/ 1	-1273.6	0.0	-1.1	0.0	65.0	0.0	65.0	0.0	65.0
	Min Myz	STR 1/ 192	-789.0	0.0	-0.4	0.0	38.4	0.0	38.4	0.0	38.4
	Max Fx	STR 1/ 46	1382.9	0.0	11.4	0.0	61.6	0.0	61.6	0.0	61.6
	Max Fy	STR 1/ 1	1281.6	0.0	11.6	0.0	63.2	0.0	63.2	0.0	63.2
	Max Fz	STR 3/ 25	1042.7	-0.3	12.0	-8.1	64.8	4.1	65.3	9.1	64.9
	Max Mx	STR 1/ 7	1133.4	-5.1	11.2	41.5	60.7	7.9	73.5	42.2	61.2
	Max My	STR 3/ 45	1066.6	-0.3	12.0	-8.1	64.9	4.1	65.4	9.1	65.0
Load No.	Max Mz	STR 3/ 10	909.3	-3.6	10.7	-6.4	57.4	21.4	57.8	22.4	61.3
16	Max Mxy	STR 1/ 25	1185.1	-5.1	11.4	41.5	62.1	7.9	74.6	42.2	62.5
	Max Mxz	STR 1/ 7	1133.4	-5.1	11.2	41.5	60.7	7.9	73.5	42.2	61.2
Member	Max Myz	STR 3/ 45	1066.6	-0.3	12.0	-8.1	64.9	4.1	65.4	9.1	65.0
723	Min Fx	STR 3/ 190	662.1	-3.6	8.1	-6.4	45.7	21.4	46.2	22.4	50.5
	Min Fy	STR 1/ 7	1133.4	-5.1	11.2	41.5	60.7	7.9	73.5	42.2	61.2
Joint	Min Fz	STR 3/ 199	757.7	-0.3	6.9	-8.1	38.4	4.1	39.2	9.1	38.6
716	Min Mx	STR 3/ 1	985.2	-1.0	10.9	-15.5	58.3	6.3	60.3	16.8	58.6
	Min My	STR 3/ 199	757.7	-0.3	6.9	-8.1	38.4	4.1	39.2	9.1	38.6
	Min Mz	STR 1/ 1	1281.6	0.0	11.6	0.0	63.2	0.0	63.2	0.0	63.2
	Min Mxy	STR 3/ 199	757.7	-0.3	6.9	-8.1	38.4	4.1	39.2	9.1	38.6
	Min Mxz	STR 1/ 1	1281.6	0.0	11.6	0.0	63.2	0.0	63.2	0.0	63.2
	Min Myz	STR 3/ 199	757.7	-0.3	6.9	-8.1	38.4	4.1	39.2	9.1	38.6

	Combinded Results											
	Max/ Min ID	**Combo ID**	**Fx (kips)**	**Fy (kips)**	**Fz (kips)**	**Mx (ft*kip)**	**My (ft*kip)**	**Mz (ft*kip)**	**Mxy (ft*kip)**	**Mxz (ft*kip)**	**Myz (ft*kip)**
	Max Fx	STR 1/ 47	1120.7	0.0	-19.2	0.0	234.0	0.1	234.0	0.1	234.0
	Max Fy	STR 3/ 1	863.5	2.8	-14.4	-16.4	183.5	44.2	184.3	47.2	188.8
	Max Fz	STR 3/ 189	613.0	1.0	-10.5	-8.5	132.9	20.4	133.1	22.1	134.4
	Max Mx	STR 1/ 7	934.5	-7.9	-16.3	36.9	201.7	-102.4	205.1	108.9	226.2
	Max My	STR 1/ 20	1111.3	0.0	-19.2	0.0	236.2	0.1	236.2	0.1	236.2
Load No.	Max Mz	STR 3/ 1	863.5	2.8	-14.4	-16.4	183.5	44.2	184.3	47.2	188.8
17	Max Mxy	STR 1/ 20	1111.3	0.0	-19.2	0.0	236.2	0.1	236.2	0.1	236.2
	Max Mxz	STR 1/ 61	724.2	-7.9	-14.0	36.9	163.1	-102.5	167.2	108.9	192.6
Member	Max Myz	STR 1/ 25	1025.1	-7.9	-17.4	36.9	216.3	-102.4	219.4	108.9	239.3
726	Min Fx	STR 3/ 190	584.0	-2.0	-10.6	-8.7	130.2	2.8	130.5	9.1	130.2
	Min Fy	STR 1/ 7	934.5	-7.9	-16.3	36.9	201.7	-102.4	205.1	108.9	226.2
Joint	Min Fz	STR 1/ 19	1096.3	0.0	-19.2	0.0	234.5	0.1	234.5	0.1	234.5
717	Min Mx	STR 3/ 1	863.5	2.8	-14.4	-16.4	183.5	44.2	184.3	47.2	188.8
	Min My	STR 3/ 200	593.4	-2.0	-10.6	-8.7	128.0	2.8	128.3	9.1	128.0
	Min Mz	STR 1/ 61	724.2	-7.9	-14.0	36.9	163.1	-102.5	167.2	108.9	192.6
	Min Mxy	STR 3/ 200	593.4	-2.0	-10.6	-8.7	128.0	2.8	128.3	9.1	128.0
	Min Mxz	STR 1/ 55	795.4	0.0	-15.8	0.0	181.3	0.1	181.3	0.1	181.3
	Min Myz	STR 3/ 200	593.4	-2.0	-10.6	-8.7	128.0	2.8	128.3	9.1	128.0
	Max Fx	STR 3/ 190	-578.2	4.8	16.0	8.7	91.5	-58.7	91.9	59.3	108.7
	Max Fy	STR 1/ 7	-926.5	7.9	23.8	-36.9	130.4	-29.1	135.5	47.0	133.6
	Max Fz	STR 1/ 19	-1088.3	0.0	26.7	0.0	146.1	0.0	146.1	0.0	146.1
	Max Mx	STR 3/ 1	-855.5	0.0	21.9	16.4	118.0	-21.4	119.1	27.0	119.9
	Max My	STR 1/ 46	-1097.7	0.0	26.7	0.0	148.2	0.0	148.2	0.0	148.2
Load No.	Max Mz	STR 1/ 1	-997.7	0.0	25.6	0.0	143.0	0.0	143.0	0.0	143.0
18	Max Mxy	STR 1/ 46	-1097.7	0.0	26.7	0.0	148.2	0.0	148.2	0.0	148.2
	Max Mxz	STR 3/ 10	-805.2	4.8	20.9	8.7	111.8	-58.7	112.1	59.3	126.2
Member	Max Myz	STR 1/ 46	-1097.7	0.0	26.7	0.0	148.2	0.0	148.2	0.0	148.2
726	Min Fx	STR 1/ 47	-1112.7	0.0	26.7	0.0	147.7	0.0	147.7	0.0	147.7
	Min Fy	STR 3/ 5	-875.5	-0.1	21.6	8.5	117.7	-10.5	118.0	13.5	118.1
Joint	Min Fz	STR 3/ 190	-578.2	4.8	16.0	8.7	91.5	-58.7	91.9	59.3	108.7
718	Min Mx	STR 1/ 7	-926.5	7.9	23.8	-36.9	130.4	-29.1	135.5	47.0	133.6
	Min My	STR 3/ 190	-578.2	4.8	16.0	8.7	91.5	-58.7	91.9	59.3	108.7
	Min Mz	STR 3/ 10	-805.2	4.8	20.9	8.7	111.8	-58.7	112.1	59.3	126.2
	Min Mxy	STR 3/ 190	-578.2	4.8	16.0	8.7	91.5	-58.7	91.9	59.3	108.7
	Min Mxz	STR 1/ 1	-997.7	0.0	25.6	0.0	143.0	0.0	143.0	0.0	143.0
	Min Myz	STR 5/ 1539	-620.3	0.1	16.9	1.2	97.2	-2.5	97.2	2.8	97.2

	Combinded Results											
	Max/ Min ID	**Combo ID**	**Fx (kips)**	**Fy (kips)**	**Fz (kips)**	**Mx (ft*kip)**	**My (ft*kip)**	**Mz (ft*kip)**	**Mxy (ft*kip)**	**Mxz (ft*kip)**	**Myz (ft*kip)**
	Max Fx	STR 3/ 190	-816.9	3.6	3.6	13.0	-30.9	30.8	33.5	33.4	43.6
	Max Fy	STR 1/ 7	-1432.0	10.9	9.4	-30.8	-83.4	143.0	88.9	146.3	165.5
	Max Fz	STR 1/ 20	-1697.3	0.0	12.6	0.0	-114.1	0.0	114.1	0.0	114.1
	Max Mx	STR 3/ 1	-1255.8	-2.1	8.7	19.0	-75.0	-29.3	77.4	34.9	80.5
	Max My	STR 3/ 199	-907.6	-0.7	2.5	9.7	-25.1	-15.0	26.9	17.8	29.2
Load No.	Max Mz	STR 1/ 7	-1432.0	10.9	9.4	-30.8	-83.4	143.0	88.9	146.3	165.5
19	Max Mxy	STR 1/ 20	-1697.3	0.0	12.6	0.0	-114.1	0.0	114.1	0.0	114.1
	Max Mxz	STR 1/ 7	-1432.0	10.9	9.4	-30.8	-83.4	143.0	88.9	146.3	165.5
Member	Max Myz	STR 1/ 25	-1506.9	10.9	11.4	-30.8	-103.7	143.0	108.2	146.3	176.6
729	Min Fx	STR 1/ 47	-1710.2	0.0	12.2	0.0	-112.1	0.0	112.1	0.0	112.1
	Min Fy	STR 3/ 1	-1255.8	-2.1	8.7	19.0	-75.0	-29.3	77.4	34.9	80.5
Joint	Min Fz	STR 3/ 199	-907.6	-0.7	2.5	9.7	-25.1	-15.0	26.9	17.8	29.2
719	Min Mx	STR 1/ 7	-1432.0	10.9	9.4	-30.8	-83.4	143.0	88.9	146.3	165.5
	Min My	STR 1/ 20	-1697.3	0.0	12.6	0.0	-114.1	0.0	114.1	0.0	114.1
	Min Mz	STR 3/ 1	-1255.8	-2.1	8.7	19.0	-75.0	-29.3	77.4	34.9	80.5
	Min Mxy	STR 3/ 199	-907.6	-0.7	2.5	9.7	-25.1	-15.0	26.9	17.8	29.2
	Min Mxz	STR 1/ 1	-1608.4	0.0	10.3	0.0	-91.6	0.0	91.6	0.0	91.6
	Min Myz	STR 3/ 199	-907.6	-0.7	2.5	9.7	-25.1	-15.0	26.9	17.8	29.2
	Max Fx	STR 1/ 47	1718.5	0.0	-5.9	0.0	-31.5	-0.1	31.5	0.1	31.5
	Max Fy	STR 1/ 1	1616.7	0.0	-3.9	0.0	-21.2	-0.1	21.2	0.1	21.2
	Max Fz	STR 3/ 200	835.8	-6.3	1.3	-13.0	14.7	48.6	19.7	50.3	50.8
	Max Mx	STR 1/ 7	1440.3	-10.9	-3.0	30.8	-17.0	28.1	35.2	41.7	32.8
	Max My	STR 3/ 200	835.8	-6.3	1.3	-13.0	14.7	48.6	19.7	50.3	50.8
Load No.	Max Mz	STR 3/ 130	869.7	-6.3	0.9	-13.0	10.7	48.6	16.9	50.3	49.8
20	Max Mxy	STR 1/ 26	1522.1	-10.3	-5.2	30.3	-29.0	22.1	41.9	37.5	36.4
	Max Mxz	STR 3/ 130	869.7	-6.3	0.9	-13.0	10.7	48.6	16.9	50.3	49.8
Member	Max Myz	STR 3/ 50	1251.5	-6.3	-3.7	-13.0	-19.9	48.6	23.8	50.3	52.5
729	Min Fx	STR 3/ 190	822.8	-6.3	1.0	-13.0	11.8	48.6	17.6	50.3	50.0
	Min Fy	STR 1/ 7	1440.3	-10.9	-3.0	30.8	-17.0	28.1	35.2	41.7	32.8
Joint	Min Fz	STR 1/ 20	1705.5	0.0	-6.2	0.0	-34.4	-0.1	34.4	0.1	34.4
720	Min Mx	STR 3/ 1	1264.1	-0.6	-2.3	-19.0	-13.0	17.4	23.1	25.8	21.7
	Min My	STR 1/ 20	1705.5	0.0	-6.2	0.0	-34.4	-0.1	34.4	0.1	34.4
	Min Mz	STR 1/ 1	1616.7	0.0	-3.9	0.0	-21.2	-0.1	21.2	0.1	21.2
	Min Mxy	STR 1/ 163	1262.8	0.0	-1.1	0.0	0.0	-0.1	0.0	0.1	0.1
	Min Mxz	STR 1/ 55	1309.7	0.0	-1.3	0.0	-1.1	-0.1	1.1	0.1	1.1
	Min Myz	STR 1/ 163	1262.8	0.0	-1.1	0.0	0.0	-0.1	0.0	0.1	0.1

	Combinded Results											
	Max/ Min ID	**Combo ID**	**Fx (kips)**	**Fy (kips)**	**Fz (kips)**	**Mx (ft*kip)**	**My (ft*kip)**	**Mz (ft*kip)**	**Mxy (ft*kip)**	**Mxz (ft*kip)**	**Myz (ft*kip)**
	Max Fx	STR 1/ 20	2347.9	0.0	11.4	0.0	-52.2	0.0	52.2	0.0	52.2
	Max Fy	STR 3/ 1	1732.2	2.9	9.4	-23.7	-35.5	40.7	42.7	47.1	54.0
	Max Fz	STR 3/ 45	2023.4	1.0	11.9	-11.5	-73.8	17.6	74.6	21.0	75.8
	Max Mx	STR 1/ 7	1888.3	0.4	9.6	2.3	-35.3	8.2	35.4	8.5	36.3
	Max My	STR 3/ 139	1128.2	1.0	4.6	-11.5	12.7	17.6	17.1	21.0	21.7
Load No.	Max Mz	STR 3/ 10	1640.6	2.4	9.3	-28.0	-34.2	42.6	44.2	50.9	54.6
21	Max Mxy	STR 3/ 45	2023.4	1.0	11.9	-11.5	-73.8	17.6	74.6	21.0	75.8
	Max Mxz	STR 3/ 10	1640.6	2.4	9.3	-28.0	-34.2	42.6	44.2	50.9	54.6
Member	Max Myz	STR 3/ 45	2023.4	1.0	11.9	-11.5	-73.8	17.6	74.6	21.0	75.8
732	Min Fx	STR 3/ 200	1020.5	2.4	5.3	-28.0	-6.9	42.6	28.8	50.9	43.1
	Min Fy	STR 1/ 1	2044.2	0.0	9.6	0.0	-35.3	0.0	35.3	0.0	35.3
Joint	Min Fz	STR 3/ 139	1128.2	1.0	4.6	-11.5	12.7	17.6	17.1	21.0	21.7
721	Min Mx	STR 3/ 10	1640.6	2.4	9.3	-28.0	-34.2	42.6	44.2	50.9	54.6
	Min My	STR 3/ 45	2023.4	1.0	11.9	-11.5	-73.8	17.6	74.6	21.0	75.8
	Min Mz	STR 1/ 9	1713.3	0.0	9.4	0.0	-35.7	-1.8	35.7	1.8	35.7
	Min Mxy	STR 5/ 806	1278.9	0.5	5.2	-0.5	-0.5	11.7	0.7	11.7	11.7
	Min Mxz	STR 1/ 1	2044.2	0.0	9.6	0.0	-35.3	0.0	35.3	0.0	35.3
	Min Myz	STR 5/ 809	1129.3	0.2	5.1	-2.3	-0.9	2.7	2.4	3.5	2.8
	Max Fx	STR 3/ 200	-1015.1	1.4	3.8	28.0	-9.2	-30.4	29.5	41.3	31.7
	Max Fy	STR 3/ 10	-1633.0	1.4	3.4	28.0	-33.0	-30.4	43.3	41.3	44.8
	Max Fz	STR 3/ 139	-1124.9	0.1	5.7	11.5	0.4	-7.8	11.5	13.9	7.9
	Max Mx	STR 3/ 10	-1633.0	1.4	3.4	28.0	-33.0	-30.4	43.3	41.3	44.8
	Max My	STR 3/ 199	-1083.5	0.1	5.7	11.5	1.3	-7.8	11.6	13.9	7.9
Load No.	Max Mz	STR 1/ 9	-1705.7	0.0	3.2	0.0	-34.8	1.1	34.8	1.1	34.8
22	Max Mxy	STR 3/ 45	-2013.6	0.1	-0.5	11.5	-68.1	-7.8	69.0	13.9	68.5
	Max Mxz	STR 3/ 10	-1633.0	1.4	3.4	28.0	-33.0	-30.4	43.3	41.3	44.8
Member	Max Myz	STR 3/ 45	-2013.6	0.1	-0.5	11.5	-68.1	-7.8	69.0	13.9	68.5
732	Min Fx	STR 1/ 20	-2340.3	0.0	1.2	0.0	-62.6	0.0	62.6	0.0	62.6
	Min Fy	STR 1/ 7	-1880.7	-0.4	3.1	-2.3	-38.3	0.4	38.4	2.3	38.3
Joint	Min Fz	STR 3/ 45	-2013.6	0.1	-0.5	11.5	-68.1	-7.8	69.0	13.9	68.5
722	Min Mx	STR 1/ 7	-1880.7	-0.4	3.1	-2.3	-38.3	0.4	38.4	2.3	38.3
	Min My	STR 3/ 45	-2013.6	0.1	-0.5	11.5	-68.1	-7.8	69.0	13.9	68.5
	Min Mz	STR 3/ 10	-1633.0	1.4	3.4	28.0	-33.0	-30.4	43.3	41.3	44.8
	Min Mxy	STR 5/ 1780	-1068.3	0.0	4.3	2.3	-6.4	-1.5	6.8	2.7	6.6
	Min Mxz	STR 1/ 1	-2036.6	0.0	3.1	0.0	-41.5	0.0	41.5	0.0	41.5
	Min Myz	STR 5/ 1780	-1068.3	0.0	4.3	2.3	-6.4	-1.5	6.8	2.7	6.6

Limit State: STRENGTH I

FR Friction
LF: 1
FR1: CR+SH+PT_EOC
FR2: CR+SH+PT_D10K

TU Uniform Temperature
LF: 0.5
TU1: TU-
TU2: TU+
TU3: TU+Temp. Diff.

DW DL Wearing Surfaces & Utilities
LF1: 1.5
LF2: 0.65
DW1: DW

LL Vehicular Live Load
LF: 1.75
LL1: LL1_Deck
LL2: LL2_Deck
LL3: LL3_Deck
LL4: LL1_Roof
LL5: LL2_Roof
LL6: LL3_Roof
LL7: LL1_Deck Offset
LL8: LL2_Deck Offset
LL9: LL3_Deck Offset

DC DL Structural Components & Attachments
LF1: 1.25
LF2: 0.9
DC1: DC

Load (Row) Number	User's Load ID	Member ID	Joint ID	Fx (kips)	Fy (kips)	Fz (kips)	Mx (ft*kip)	My (ft*kip)	Mz (ft*kip)
1	CR+SH+PT_D10K	702	701	7.4	0	-48.2	0	387.9	0
2	CR+SH+PT_D10K	702	702	-7.4	0	48.3	0	244.2	0
3	CR+SH+PT_D10K	705	703	-0.4	0	3	0	-49.5	0
4	CR+SH+PT_D10K	705	704	0.4	0	-2.9	0	-36.2	0
5	CR+SH+PT_D10K	708	705	112.5	0	14.8	0	-96.6	0
6	CR+SH+PT_D10K	708	706	-112.5	0	-14.8	0	-65.3	0
7	CR+SH+PT_D10K	711	707	-210.6	0	-0.3	0	22.2	0
8	CR+SH+PT_D10K	711	708	210.6	0	0.3	0	-14.3	0
9	CR+SH+PT_D10K	714	709	144.5	0	24.9	0	-154.3	-0.1
10	CR+SH+PT_D10K	714	710	-144.5	0	-24.9	0	-139.8	0
11	CR+SH+PT_D10K	717	711	-301.3	0	-0.8	0	13.6	0
12	CR+SH+PT_D10K	717	712	301.3	0	0.8	0	4.2	0
13	CR+SH+PT_D10K	720	713	160.3	0	-16.5	0	112.5	0.1
14	CR+SH+PT_D10K	720	714	-160.3	0	16.5	0	107.5	0
15	CR+SH+PT_D10K	723	715	-236.8	0	-1.5	0	13.6	0
16	CR+SH+PT_D10K	723	716	236.8	0	1.4	0	15.5	0
17	CR+SH+PT_D10K	726	717	118.3	0	-5.7	0	40.5	0
18	CR+SH+PT_D10K	726	718	-118.3	0	5.7	0	54.8	0
19	CR+SH+PT_D10K	729	719	-121.5	0	-7.1	0	51.2	0
20	CR+SH+PT_D10K	729	720	121.6	0	7	0	60.6	0
21	CR+SH+PT_D10K	732	721	-57.3	0	-3.2	0	45.7	0
22	CR+SH+PT_D10K	732	722	57.3	0	3.2	0	27.4	0
1	CR+SH+PT_EOC	702	701	-5.3	0	0	0	0	0
2	CR+SH+PT_EOC	702	702	5.3	0	0	0	0	0
3	CR+SH+PT_EOC	705	703	-184.7	0	2.7	0	-26.9	0
4	CR+SH+PT_EOC	705	704	184.7	0	-2.7	0	-51.6	0
5	CR+SH+PT_EOC	708	705	109.4	0	22.8	0	-136.4	-0.1
6	CR+SH+PT_EOC	708	706	-109.4	0	-22.8	0	-113.6	0
7	CR+SH+PT_EOC	711	707	-248.8	0	-0.1	0	13.4	0
8	CR+SH+PT_EOC	711	708	248.8	0	0.1	0	-11.3	0
9	CR+SH+PT_EOC	714	709	122.1	0	23.7	0	-147.7	-0.1
10	CR+SH+PT_EOC	714	710	-122.1	0	-23.7	0	-132.6	0
11	CR+SH+PT_EOC	717	711	-250.1	0	-0.8	0	13.2	0
12	CR+SH+PT_EOC	717	712	250.1	0	0.7	0	4.5	0
13	CR+SH+PT_EOC	720	713	127	0	-15.7	0	106.3	0
14	CR+SH+PT_EOC	720	714	-127	0	15.7	0	102.9	0
15	CR+SH+PT_EOC	723	715	-187.2	0	-1.8	0	17.2	0
16	CR+SH+PT_EOC	723	716	187.2	0	1.8	0	18.4	0
17	CR+SH+PT_EOC	726	717	108.9	0	-5.7	0	42.7	0
18	CR+SH+PT_EOC	726	718	-108.9	0	5.7	0	52.7	0
19	CR+SH+PT_EOC	729	719	-108.6	0	-6.7	0	49.2	0
20	CR+SH+PT_EOC	729	720	108.6	0	6.7	0	57.7	0
21	CR+SH+PT_EOC	732	721	36.1	0	-2.9	0	42.2	0
22	CR+SH+PT_EOC	732	722	-36.1	0	2.9	0	22.9	0
1	DC	702	701	63	0	0	0.1	0	0
2	DC	702	702	-52.7	0	0	-0.1	0	0
3	DC	705	703	1854.3	0	0.4	-0.1	299	0.1
4	DC	705	704	-1844.8	0	20.5	0.1	-5.5	0
5	DC	708	705	-609	0	-25.9	0	190.2	0.1
6	DC	708	706	614.5	0	27.7	0	103.7	0
7	DC	711	707	731.2	0	3.7	0	36.8	0
8	DC	711	708	-724.9	0	8.8	0	31.9	0
9	DC	714	709	-242.4	0	-16	0	83.7	0
10	DC	714	710	248.6	0	16.1	0	106.6	0
11	DC	717	711	26.5	0	3.5	0	31.2	0
12	DC	717	712	-20.1	0	7.3	0	14	0
13	DC	720	713	86.7	0	-6.5	0	59.9	0
14	DC	720	714	-80.1	0	9	0	43.4	0
15	DC	723	715	-587.5	0	1.2	0	29.4	0
16	DC	723	716	593.9	0	7.2	0	31.4	0
17	DC	726	717	601	0	-6.6	0	110.5	0.1
18	DC	726	718	-594.6	0	12.6	0	48.6	0
19	DC	729	719	-870.6	0	12.6	0	-102.1	0
20	DC	729	720	877.2	0	-7.5	0	-57.4	-0.1
21	DC	732	721	1386.5	0	10.4	0	-68	0
22	DC	732	722	-1380.4	0	-0.3	0	-52.6	0

Load (Row) Number	User's Load ID	Member ID	Joint ID	Fx (kips)	Fy (kips)	Fz (kips)	Mx (ft*kip)	My (ft*kip)	Mz (ft*kip)
1	DW	702	701	1	0	-5	0	51.7	0
2	DW	702	702	-1	0	5	0	13.9	0
3	DW	705	703	75.3	0	-0.3	0	10.8	0
4	DW	705	704	-75.3	0	0.3	0	-1.9	0
5	DW	708	705	-32.2	0	-1.2	0	8.2	0
6	DW	708	706	32.2	0	1.2	0	5.4	0
7	DW	711	707	18.4	0	-0.1	0	2.4	0
8	DW	711	708	-18.4	0	0.1	0	-0.5	0
9	DW	714	709	-13.8	0	0.1	0	-0.9	0
10	DW	714	710	13.8	0	-0.1	0	-0.8	0
11	DW	717	711	-19.8	0	-0.1	0	1.8	0
12	DW	717	712	19.8	0	0.1	0	-0.2	0
13	DW	720	713	2	0	-0.9	0	6	0
14	DW	720	714	-2	0	0.9	0	5.6	0
15	DW	723	715	-46.3	0	-0.1	0	1.5	0
16	DW	723	716	46.3	0	0.1	0	0.8	0
17	DW	726	717	22.2	0	-0.6	0	5.7	0
18	DW	726	718	-22.2	0	0.6	0	3.9	0
19	DW	729	719	-55.1	0	0.2	0	-2.6	0
20	DW	729	720	55.1	0	-0.2	0	-1.3	0
21	DW	732	721	48.7	0	0	0	0	0
22	DW	732	722	-48.7	0	0	0	-1	0
1	LL1_Deck	702	701	3.8	0	-18.3	0	189	0
2	LL1_Deck	702	702	-3.8	0	18.3	0	50.9	0
3	LL1_Deck	705	703	275.4	0	-1.1	0	39.3	0
4	LL1_Deck	705	704	-275.4	0	1.1	0	-6.8	0
5	LL1_Deck	708	705	-117.8	0	-4.5	0	30.1	0
6	LL1_Deck	708	706	117.8	0	4.5	0	19.6	0
7	LL1_Deck	711	707	67.3	0	-0.3	0	8.9	0
8	LL1_Deck	711	708	-67.3	0	0.3	0	-2	0
9	LL1_Deck	714	709	-50.5	0	0.5	0	-3.4	0
10	LL1_Deck	714	710	50.5	0	-0.5	0	-3	0
11	LL1_Deck	717	711	-72.5	0	-0.2	0	6.4	0
12	LL1_Deck	717	712	72.5	0	0.2	0	-0.7	0
13	LL1_Deck	720	713	7.2	0	-3.2	0	22.1	0
14	LL1_Deck	720	714	-7.2	0	3.2	0	20.3	0
15	LL1_Deck	723	715	-169.4	0	-0.4	0	5.7	0
16	LL1_Deck	723	716	169.4	0	0.4	0	2.8	0
17	LL1_Deck	726	717	81.3	0	-2.1	0	20.8	0
18	LL1_Deck	726	718	-81.3	0	2.1	0	14.3	0
19	LL1_Deck	729	719	-201.5	0	0.9	0	-9.5	0
20	LL1_Deck	729	720	201.5	0	-0.9	0	-4.7	0
21	LL1_Deck	732	721	178.3	0	0.1	0	0.1	0
22	LL1_Deck	732	722	-178.3	0	-0.1	0	-3.5	0
1	LL1_Deck Offset	702	701	1.9	-9.8	-9.2	-3.1	94.5	-122
2	LL1_Deck Offset	702	702	-1.9	9.8	9.2	3.1	25.5	-6.1
3	LL1_Deck Offset	705	703	137.7	-1.4	-0.6	13.1	19.7	-25.9
4	LL1_Deck Offset	705	704	-137.7	1.4	0.6	-13.1	-3.4	-15.4
5	LL1_Deck Offset	708	705	-58.9	3.3	-2.3	-7.2	15	42.6
6	LL1_Deck Offset	708	706	58.9	-3.3	2.3	7.2	9.8	-6.8
7	LL1_Deck Offset	711	707	33.7	0	-0.1	-10.9	4.5	7.3
8	LL1_Deck Offset	711	708	-33.7	0	0.1	10.9	-1	-7.1
9	LL1_Deck Offset	714	709	-25.3	8.9	0.3	-0.3	-1.7	111
10	LL1_Deck Offset	714	710	25.3	-8.9	-0.3	0.3	-1.5	-5.4
11	LL1_Deck Offset	717	711	-36.2	1	-0.1	-20.5	3.2	28.6
12	LL1_Deck Offset	717	712	36.2	-1	0.1	20.5	-0.4	-4.4
13	LL1_Deck Offset	720	713	3.6	-9.6	-1.6	19.1	11.1	-118.2
14	LL1_Deck Offset	720	714	-3.6	9.6	1.6	-19.1	10.2	-10
15	LL1_Deck Offset	723	715	-84.7	2.9	-0.2	-23.7	2.8	54.8
16	LL1_Deck Offset	723	716	84.7	-2.9	0.2	23.7	1.4	4.5
17	LL1_Deck Offset	726	717	40.6	-4.5	-1.1	21.1	10.4	-58.6
18	LL1_Deck Offset	726	718	-40.6	4.5	1.1	-21.1	7.1	-16.6
19	LL1_Deck Offset	729	719	-100.7	6.2	0.4	-17.6	-4.8	81.7
20	LL1_Deck Offset	729	720	100.7	-6.2	-0.4	17.6	-2.3	16.1
21	LL1_Deck Offset	732	721	89.2	0.2	0.1	1.3	0.1	4.7
22	LL1_Deck Offset	732	722	-89.2	-0.2	-0.1	-1.3	-1.7	0.2

Load (Row) Number	User's Load ID	Member ID	Joint ID	Fx (kips)	Fy (kips)	Fz (kips)	Mx (ft*kip)	My (ft*kip)	Mz (ft*kip)
1	LL1_Roof	702	701	5.9	0	-3.7	0	19.1	0
2	LL1_Roof	702	702	-5.9	0	3.7	0	30	0
3	LL1_Roof	705	703	30.4	0	0.3	0	-1.9	0
4	LL1_Roof	705	704	-30.4	0	-0.3	0	-7.3	0
5	LL1_Roof	708	705	-2.3	0	-0.2	0	2.5	0
6	LL1_Roof	708	706	2.3	0	0.2	0	-0.7	0
7	LL1_Roof	711	707	7.4	0	0	0	1.1	0
8	LL1_Roof	711	708	-7.4	0	0	0	0.1	0
9	LL1_Roof	714	709	3	0	0	0	-0.6	0
10	LL1_Roof	714	710	-3	0	0	0	0.1	0
11	LL1_Roof	717	711	-6.2	0	0	0	0.3	0
12	LL1_Roof	717	712	6.2	0	0	0	-0.3	0
13	LL1_Roof	720	713	9.1	0	-0.3	0	2.2	0
14	LL1_Roof	720	714	-9.1	0	0.3	0	1.8	0
15	LL1_Roof	723	715	-14.5	0	0	0	0.1	0
16	LL1_Roof	723	716	14.5	0	0	0	0	0
17	LL1_Roof	726	717	16.8	0	-0.2	0	2.1	0
18	LL1_Roof	726	718	-16.8	0	0.2	0	1	0
19	LL1_Roof	729	719	-15.2	0	0.2	0	-2.2	0
20	LL1_Roof	729	720	15.2	0	-0.2	0	-1.5	0
21	LL1_Roof	732	721	23.7	0	0.1	0	-1	0
22	LL1_Roof	732	722	-23.7	0	-0.1	0	-0.9	0
1	LL2_Deck	702	701	4.2	0	-20.4	0	208.6	0.1
2	LL2_Deck	702	702	-4.2	0	20.4	0	58.1	0
3	LL2_Deck	705	703	324.2	0	-1.1	0	40.8	0
4	LL2_Deck	705	704	-324.2	0	1.1	0	-7.9	0
5	LL2_Deck	708	705	-132.3	0	-5.8	0	38.2	0
6	LL2_Deck	708	706	132.3	0	5.8	0	25.4	0
7	LL2_Deck	711	707	100.4	0	-0.3	0	10.2	0
8	LL2_Deck	711	708	-100.4	0	0.3	0	-2.3	0
9	LL2_Deck	714	709	-59.7	0	-0.3	0	1.9	0
10	LL2_Deck	714	710	59.7	0	0.3	0	1.6	0
11	LL2_Deck	717	711	-53.5	0	-0.3	0	7.5	0
12	LL2_Deck	717	712	53.5	0	0.3	0	-1.2	0
13	LL2_Deck	720	713	4.5	0	-3	0	21.1	0
14	LL2_Deck	720	714	-4.5	0	3	0	19.1	0
15	LL2_Deck	723	715	-165.3	0	-0.5	0	6.4	0
16	LL2_Deck	723	716	165.3	0	0.5	0	2.7	0
17	LL2_Deck	726	717	89.9	0	-2.1	0	21.8	0
18	LL2_Deck	726	718	-89.9	0	2.1	0	14	0
19	LL2_Deck	729	719	-209.5	0	1.1	0	-10.7	0
20	LL2_Deck	729	720	209.5	0	-1.1	0	-6.2	0
21	LL2_Deck	732	721	199.9	0	0.2	0	0.4	0
22	LL2_Deck	732	722	-199.9	0	-0.2	0	-4.2	0
1	LL2_Deck Offset	702	701	2.1	-10.2	-10.2	-3.4	104.3	-127.4
2	LL2_Deck Offset	702	702	-2.1	10.2	10.2	3.4	29	-5.7
3	LL2_Deck Offset	705	703	162.1	-1.5	-0.6	14.2	20.4	-27.1
4	LL2_Deck Offset	705	704	-162.1	1.5	0.6	-14.2	-4	-15.5
5	LL2_Deck Offset	708	705	-66.2	3	-2.9	-7	19.1	40
6	LL2_Deck Offset	708	706	66.2	-3	2.9	7	12.7	-7
7	LL2_Deck Offset	711	707	50.2	0	-0.1	-10.4	5.1	6.6
8	LL2_Deck Offset	711	708	-50.2	0	0.1	10.4	-1.2	-7.3
9	LL2_Deck Offset	714	709	-29.9	8.6	-0.2	-0.3	1	108
10	LL2_Deck Offset	714	710	29.9	-8.6	0.2	0.3	0.8	-6.1
11	LL2_Deck Offset	717	711	-26.7	1	-0.1	-20.2	3.8	27.8
12	LL2_Deck Offset	717	712	26.7	-1	0.1	20.2	-0.6	-5
13	LL2_Deck Offset	720	713	2.3	-9.3	-1.5	18.9	10.5	-114.9
14	LL2_Deck Offset	720	714	-2.3	9.3	1.5	-18.9	9.6	-8.7
15	LL2_Deck Offset	723	715	-82.7	2.8	-0.2	-23.5	3.2	53.6
16	LL2_Deck Offset	723	716	82.7	-2.8	0.2	23.5	1.4	2.8
17	LL2_Deck Offset	726	717	45	-4.3	-1.1	20.9	10.9	-56.1
18	LL2_Deck Offset	726	718	-45	4.3	1.1	-20.9	7	-15.6
19	LL2_Deck Offset	729	719	-104.7	5.9	0.5	-17.3	-5.3	80.5
20	LL2_Deck Offset	729	720	104.7	-5.9	-0.5	17.3	-3.1	12.7
21	LL2_Deck Offset	732	721	100	0.2	0.1	1.3	0.2	5.7
22	LL2_Deck Offset	732	722	-100	-0.2	-0.1	-1.3	-2.1	-0.4

Load (Row) Number	User's Load ID	Member ID	Joint ID	Fx (kips)	Fy (kips)	Fz (kips)	Mx (ft*kip)	My (ft*kip)	Mz (ft*kip)
1	LL2_Roof	702	701	6	0	-4	0	21.2	0
2	LL2_Roof	702	702	-6	0	4	0	30.8	0
3	LL2_Roof	705	703	35.5	0	0.3	0	-1.7	0
4	LL2_Roof	705	704	-35.5	0	-0.3	0	-7.4	0
5	LL2_Roof	708	705	-3.8	0	-0.3	0	3.3	0
6	LL2_Roof	708	706	3.8	0	0.3	0	-0.1	0
7	LL2_Roof	711	707	10.8	0	0	0	1.3	0
8	LL2_Roof	711	708	-10.8	0	0	0	0	0
9	LL2_Roof	714	709	2.1	0	0	0	-0.1	0
10	LL2_Roof	714	710	-2.1	0	0	0	0.6	0
11	LL2_Roof	717	711	-4.3	0	0	0	0.4	0
12	LL2_Roof	717	712	4.3	0	0	0	-0.4	0
13	LL2_Roof	720	713	9	0	-0.3	0	2.1	0
14	LL2_Roof	720	714	-9	0	0.3	0	1.7	0
15	LL2_Roof	723	715	-14.4	0	0	0	0.2	0
16	LL2_Roof	723	716	14.4	0	0	0	0	0
17	LL2_Roof	726	717	18.2	0	-0.2	0	2.3	0
18	LL2_Roof	726	718	-18.2	0	0.2	0	1	0
19	LL2_Roof	729	719	-16.3	0	0.3	0	-2.5	0
20	LL2_Roof	729	720	16.3	0	-0.3	0	-1.7	0
21	LL2_Roof	732	721	26.9	0	0.1	0	-1.2	0
22	LL2_Roof	732	722	-26.9	0	-0.1	0	-1.1	0
1	LL3_Deck	702	701	-0.5	0	2	0	-19.7	-0.1
2	LL3_Deck	702	702	0.5	0	-2	0	-7.2	0
3	LL3_Deck	705	703	-48.8	0	0	0	-1.4	0
4	LL3_Deck	705	704	48.8	0	0	0	1.1	0
5	LL3_Deck	708	705	14.5	0	1.3	0	-8.1	0
6	LL3_Deck	708	706	-14.5	0	-1.3	0	-5.8	0
7	LL3_Deck	711	707	-33.1	0	0	0	-1.3	0
8	LL3_Deck	711	708	33.1	0	0	0	0.3	0
9	LL3_Deck	714	709	9.2	0	0.8	0	-5.3	0
10	LL3_Deck	714	710	-9.2	0	-0.8	0	-4.6	0
11	LL3_Deck	717	711	-19	0	0	0	-1.1	0
12	LL3_Deck	717	712	19	0	0	0	0.5	0
13	LL3_Deck	720	713	2.7	0	-0.2	0	1	0
14	LL3_Deck	720	714	-2.7	0	0.2	0	1.2	0
15	LL3_Deck	723	715	-4.1	0	0	0	-0.8	0
16	LL3_Deck	723	716	4.1	0	0	0	0.1	0
17	LL3_Deck	726	717	-8.6	0	0	0	-1	0
18	LL3_Deck	726	718	8.6	0	0	0	0.3	0
19	LL3_Deck	729	719	8	0	-0.2	0	1.2	0
20	LL3_Deck	729	720	-8	0	0.2	0	1.5	0
21	LL3_Deck	732	721	-21.6	0	0	0	-0.3	0
22	LL3_Deck	732	722	21.6	0	0	0	0.7	0
1	LL3_Deck Offset	702	701	-0.2	0.4	1	0.3	-9.8	5.3
2	LL3_Deck Offset	702	702	0.2	-0.4	-1	-0.3	-3.6	-0.4
3	LL3_Deck Offset	705	703	-24.4	0	0	-1.1	-0.7	1.2
4	LL3_Deck Offset	705	704	24.4	0	0	1.1	0.5	0.1
5	LL3_Deck Offset	708	705	7.2	0.3	0.6	-0.1	-4	2.6
6	LL3_Deck Offset	708	706	-7.2	-0.3	-0.6	0.1	-2.9	0.2
7	LL3_Deck Offset	711	707	-16.5	0	0	-0.4	-0.6	0.7
8	LL3_Deck Offset	711	708	16.5	0	0	0.4	0.2	0.2
9	LL3_Deck Offset	714	709	4.6	0.3	0.4	0	-2.7	2.9
10	LL3_Deck Offset	714	710	-4.6	-0.3	-0.4	0	-2.3	0.7
11	LL3_Deck Offset	717	711	-9.5	0.1	0	-0.3	-0.5	0.8
12	LL3_Deck Offset	717	712	9.5	-0.1	0	0.3	0.2	0.6
13	LL3_Deck Offset	720	713	1.4	-0.3	-0.1	0.2	0.5	-3.3
14	LL3_Deck Offset	720	714	-1.4	0.3	0.1	-0.2	0.6	-1.3
15	LL3_Deck Offset	723	715	-2	0.1	0	-0.2	-0.4	1.1
16	LL3_Deck Offset	723	716	2	-0.1	0	0.2	0.1	1.7
17	LL3_Deck Offset	726	717	-4.3	-0.2	0	0.1	-0.5	-2.5
18	LL3_Deck Offset	726	718	4.3	0.2	0	-0.1	0.2	-1
19	LL3_Deck Offset	729	719	4	0.3	-0.1	-0.3	0.6	1.2
20	LL3_Deck Offset	729	720	-4	-0.3	0.1	0.3	0.7	3.4
21	LL3_Deck Offset	732	721	-10.8	0	0	0	-0.1	-1
22	LL3_Deck Offset	732	722	10.8	0	0	0	0.3	0.6

Load (Row) Number	User's Load ID	Member ID	Joint ID	Fx (kips)	Fy (kips)	Fz (kips)	Mx (ft*kip)	My (ft*kip)	Mz (ft*kip)
1	LL3_Roof	702	701	0	0	0.2	0	-2.1	0
2	LL3_Roof	702	702	0	0	-0.2	0	-0.8	0
3	LL3_Roof	705	703	-5.1	0	0	0	-0.2	0
4	LL3_Roof	705	704	5.1	0	0	0	0.1	0
5	LL3_Roof	708	705	1.5	0	0.1	0	-0.8	0
6	LL3_Roof	708	706	-1.5	0	-0.1	0	-0.6	0
7	LL3_Roof	711	707	-3.4	0	0	0	-0.1	0
8	LL3_Roof	711	708	3.4	0	0	0	0	0
9	LL3_Roof	714	709	0.9	0	0.1	0	-0.5	0
10	LL3_Roof	714	710	-0.9	0	-0.1	0	-0.5	0
11	LL3_Roof	717	711	-1.8	0	0	0	-0.1	0
12	LL3_Roof	717	712	1.8	0	0	0	0	0
13	LL3_Roof	720	713	0.1	0	0	0	0.1	0
14	LL3_Roof	720	714	-0.1	0	0	0	0.1	0
15	LL3_Roof	723	715	-0.1	0	0	0	-0.1	0
16	LL3_Roof	723	716	0.1	0	0	0	0	0
17	LL3_Roof	726	717	-1.4	0	0	0	-0.2	0
18	LL3_Roof	726	718	1.4	0	0	0	0	0
19	LL3_Roof	729	719	1.2	0	0	0	0.3	0
20	LL3_Roof	729	720	-1.2	0	0	0	0.2	0
21	LL3_Roof	732	721	-3.2	0	0	0	0.2	0
22	LL3_Roof	732	722	3.2	0	0	0	0.2	0
1	TU-	702	701	-1.4	0	5.4	0	-48.2	0
2	TU-	702	702	1.4	0	-5.4	0	-22.3	0
3	TU-	705	703	-159.5	0	-0.3	0	1.9	0
4	TU-	705	704	159.5	0	0.3	0	6.3	0
5	TU-	708	705	30.4	0	3.8	0	-23.9	0
6	TU-	708	706	-30.4	0	-3.8	0	-17.7	0
7	TU-	711	707	-77.2	0	0.2	0	-5	0
8	TU-	711	708	77.2	0	-0.2	0	0.4	0
9	TU-	714	709	8.1	0	1.4	0	-7.9	0
10	TU-	714	710	-8.1	0	-1.4	0	-8.3	0
11	TU-	717	711	-17.4	0	0.1	0	-2.2	0
12	TU-	717	712	17.4	0	-0.1	0	0.8	0
13	TU-	720	713	-14.9	0	0	0	-0.6	0
14	TU-	720	714	14.9	0	0	0	0.3	0
15	TU-	723	715	27.7	0	0.2	0	-2.4	0
16	TU-	723	716	-27.7	0	-0.2	0	-1.2	0
17	TU-	726	717	-60	0	0.9	0	-11.7	0
18	TU-	726	718	60	0	-0.9	0	-2.7	0
19	TU-	729	719	47.4	0	-1.3	0	14.7	0
20	TU-	729	720	-47.4	0	1.3	0	6	0
21	TU-	732	721	-220.2	0	-1.4	0	14.6	0
22	TU-	732	722	220.2	0	1.4	0	18	0
1	TU+	702	701	1.4	0	-5.4	0	48.2	0
2	TU+	702	702	-1.4	0	5.4	0	22.3	0
3	TU+	705	703	159.5	0	0.3	0	-1.9	0
4	TU+	705	704	-159.5	0	-0.3	0	-6.3	0
5	TU+	708	705	-30.4	0	-3.8	0	23.9	0
6	TU+	708	706	30.4	0	3.8	0	17.7	0
7	TU+	711	707	77.2	0	-0.2	0	5	0
8	TU+	711	708	-77.2	0	0.2	0	-0.4	0
9	TU+	714	709	-8.1	0	-1.4	0	7.9	0
10	TU+	714	710	8.1	0	1.4	0	8.3	0
11	TU+	717	711	17.4	0	-0.1	0	2.2	0
12	TU+	717	712	-17.4	0	0.1	0	-0.8	0
13	TU+	720	713	14.9	0	0	0	0.6	0
14	TU+	720	714	-14.9	0	0	0	-0.3	0
15	TU+	723	715	-27.7	0	-0.2	0	2.4	0
16	TU+	723	716	27.7	0	0.2	0	1.2	0
17	TU+	726	717	60	0	-0.9	0	11.7	0
18	TU+	726	718	-60	0	0.9	0	2.7	0
19	TU+	729	719	-47.4	0	1.3	0	-14.7	0
20	TU+	729	720	47.4	0	-1.3	0	-6	0
21	TU+	732	721	220.2	0	1.4	0	-14.6	0
22	TU+	732	722	-220.2	0	-1.4	0	-18	0

Load (Row) Number	User's Load ID	Member ID	Joint ID	Fx (kips)	Fy (kips)	Fz (kips)	Mx (ft*kip)	My (ft*kip)	Mz (ft*kip)
1	TU+Temp. Diff.	702	701	3	0	-12.6	0	118.4	0
2	TU+Temp. Diff.	702	702	-3	0	12.6	0	46.9	0
3	TU+Temp. Diff.	705	703	321.4	0	0.2	0	4.5	0
4	TU+Temp. Diff.	705	704	-321.4	0	-0.2	0	-10.5	0
5	TU+Temp. Diff.	708	705	-54.7	0	-7.2	0	45.2	0
6	TU+Temp. Diff.	708	706	54.7	0	7.2	0	34	0
7	TU+Temp. Diff.	711	707	138.3	0	-0.3	0	9.3	0
8	TU+Temp. Diff.	711	708	-138.3	0	0.3	0	-0.8	0
9	TU+Temp. Diff.	714	709	-4.1	0	-2.3	0	12.5	0
10	TU+Temp. Diff.	714	710	4.1	0	2.3	0	14.2	0
11	TU+Temp. Diff.	717	711	10.3	0	-0.1	0	3.9	0
12	TU+Temp. Diff.	717	712	-10.3	0	0.1	0	-1.3	0
13	TU+Temp. Diff.	720	713	44.4	0	-0.5	0	4.8	0
14	TU+Temp. Diff.	720	714	-44.4	0	0.5	0	1.9	0
15	TU+Temp. Diff.	723	715	-75.6	0	-0.2	0	2.1	0
16	TU+Temp. Diff.	723	716	75.6	0	0.2	0	1.5	0
17	TU+Temp. Diff.	726	717	121.1	0	-1.3	0	17.4	0
18	TU+Temp. Diff.	726	718	-121.1	0	1.3	0	3.6	0
19	TU+Temp. Diff.	729	719	-102.3	0	2.6	0	-26	0
20	TU+Temp. Diff.	729	720	102.3	0	-2.6	0	-15.1	0
21	TU+Temp. Diff.	732	721	311.6	0	1.9	0	-20.2	0
22	TU+Temp. Diff.	732	722	-311.6	0	-1.9	0	-21.7	0

Limit State: STRENGTH III

TU Uniform Temperature
LF: 0.5
TU1: TU-
TU2: TU+
TU3: TU+Temp. Diff.

DC DL Structural Components & Attachments
LF1: 1.25
LF2: 0.9
DC1: DC

FR Friction
LF: 1
FR1: CR+SH+PT_EOC
FR2: CR+SH+PT_D10K

WS Wind Load on Structure
LF: 1.4
WS1: WS_0 DEG
WS2: WS_15 DEG
WS3: WS_30 DEG
WS4: WS_45 DEG
WS5: WS_60 DEG
WS6: WS_-15 DEG
WS7: WS_-30 DEG
WS8: WS_-45 DEG
WS9: WS_-60 DEG
WS10: WS+WUP

DW DL Wearing Surfaces & Utilities
LF1: 1.5
LF2: 0.65
DW1: DW

Load (Row) Number	User's Load ID	Member ID	Joint ID	Fx (kips)	Fy (kips)	Fz (kips)	Mx (ft*kip)	My (ft*kip)	Mz (ft*kip)
1	CR+SH+PT_D10K	702	701	7.4	0	-48.2	0	387.9	0
2	CR+SH+PT_D10K	702	702	-7.4	0	48.3	0	244.2	0
3	CR+SH+PT_D10K	705	703	-0.4	0	3	0	-49.5	0
4	CR+SH+PT_D10K	705	704	0.4	0	-2.9	0	-36.2	0
5	CR+SH+PT_D10K	708	705	112.5	0	14.8	0	-96.6	0
6	CR+SH+PT_D10K	708	706	-112.5	0	-14.8	0	-65.3	0
7	CR+SH+PT_D10K	711	707	-210.6	0	-0.3	0	22.2	0
8	CR+SH+PT_D10K	711	708	210.6	0	0.3	0	-14.3	0
9	CR+SH+PT_D10K	714	709	144.5	0	24.9	0	-154.3	-0.1
10	CR+SH+PT_D10K	714	710	-144.5	0	-24.9	0	-139.8	0
11	CR+SH+PT_D10K	717	711	-301.3	0	-0.8	0	13.6	0
12	CR+SH+PT_D10K	717	712	301.3	0	0.8	0	4.2	0
13	CR+SH+PT_D10K	720	713	160.3	0	-16.5	0	112.5	0.1
14	CR+SH+PT_D10K	720	714	-160.3	0	16.5	0	107.5	0
15	CR+SH+PT_D10K	723	715	-236.8	0	-1.5	0	13.6	0
16	CR+SH+PT_D10K	723	716	236.8	0	1.4	0	15.5	0
17	CR+SH+PT_D10K	726	717	118.3	0	-5.7	0	40.5	0
18	CR+SH+PT_D10K	726	718	-118.3	0	5.7	0	54.8	0
19	CR+SH+PT_D10K	729	719	-121.5	0	-7.1	0	51.2	0
20	CR+SH+PT_D10K	729	720	121.6	0	7	0	60.6	0
21	CR+SH+PT_D10K	732	721	-57.3	0	-3.2	0	45.7	0
22	CR+SH+PT_D10K	732	722	57.3	0	3.2	0	27.4	0
1	CR+SH+PT_EOC	702	701	-5.3	0	0	0	0	0
2	CR+SH+PT_EOC	702	702	5.3	0	0	0	0	0
3	CR+SH+PT_EOC	705	703	-184.7	0	2.7	0	-26.9	0
4	CR+SH+PT_EOC	705	704	184.7	0	-2.7	0	-51.6	0
5	CR+SH+PT_EOC	708	705	109.4	0	22.8	0	-136.4	-0.1
6	CR+SH+PT_EOC	708	706	-109.4	0	-22.8	0	-113.6	0
7	CR+SH+PT_EOC	711	707	-248.8	0	-0.1	0	13.4	0
8	CR+SH+PT_EOC	711	708	248.8	0	0.1	0	-11.3	0
9	CR+SH+PT_EOC	714	709	122.1	0	23.7	0	-147.7	-0.1
10	CR+SH+PT_EOC	714	710	-122.1	0	-23.7	0	-132.6	0
11	CR+SH+PT_EOC	717	711	-250.1	0	-0.8	0	13.2	0
12	CR+SH+PT_EOC	717	712	250.1	0	0.7	0	4.5	0
13	CR+SH+PT_EOC	720	713	127	0	-15.7	0	106.3	0
14	CR+SH+PT_EOC	720	714	-127	0	15.7	0	102.9	0
15	CR+SH+PT_EOC	723	715	-187.2	0	-1.8	0	17.2	0
16	CR+SH+PT_EOC	723	716	187.2	0	1.8	0	18.4	0
17	CR+SH+PT_EOC	726	717	108.9	0	-5.7	0	42.7	0
18	CR+SH+PT_EOC	726	718	-108.9	0	5.7	0	52.7	0
19	CR+SH+PT_EOC	729	719	-108.6	0	-6.7	0	49.2	0
20	CR+SH+PT_EOC	729	720	108.6	0	6.7	0	57.7	0
21	CR+SH+PT_EOC	732	721	36.1	0	-2.9	0	42.2	0
22	CR+SH+PT_EOC	732	722	-36.1	0	2.9	0	22.9	0
1	DC	702	701	63	0	0	0.1	0	0
2	DC	702	702	-52.7	0	0	-0.1	0	0
3	DC	705	703	1854.3	0	0.4	-0.1	299	0.1
4	DC	705	704	-1844.8	0	20.5	0.1	-5.5	0
5	DC	708	705	-609	0	-25.9	0	190.2	0.1
6	DC	708	706	614.5	0	27.7	0	103.7	0
7	DC	711	707	731.2	0	3.7	0	36.8	0
8	DC	711	708	-724.9	0	8.8	0	31.9	0
9	DC	714	709	-242.4	0	-16	0	83.7	0
10	DC	714	710	248.6	0	16.1	0	106.6	0
11	DC	717	711	26.5	0	3.5	0	31.2	0
12	DC	717	712	-20.1	0	7.3	0	14	0
13	DC	720	713	86.7	0	-6.5	0	59.9	0
14	DC	720	714	-80.1	0	9	0	43.4	0
15	DC	723	715	-587.5	0	1.2	0	29.4	0
16	DC	723	716	593.9	0	7.2	0	31.4	0
17	DC	726	717	601	0	-6.6	0	110.5	0.1
18	DC	726	718	-594.6	0	12.6	0	48.6	0
19	DC	729	719	-870.6	0	12.6	0	-102.1	0
20	DC	729	720	877.2	0	-7.5	0	-57.4	-0.1
21	DC	732	721	1386.5	0	10.4	0	-68	0
22	DC	732	722	-1380.4	0	-0.3	0	-52.6	0

Load (Row) Number	User's Load ID	Member ID	Joint ID	Fx (kips)	Fy (kips)	Fz (kips)	Mx (ft*kip)	My (ft*kip)	Mz (ft*kip)
1	DW	702	701	1	0	-5	0	51.7	0
2	DW	702	702	-1	0	5	0	13.9	0
3	DW	705	703	75.3	0	-0.3	0	10.8	0
4	DW	705	704	-75.3	0	0.3	0	-1.9	0
5	DW	708	705	-32.2	0	-1.2	0	8.2	0
6	DW	708	706	32.2	0	1.2	0	5.4	0
7	DW	711	707	18.4	0	-0.1	0	2.4	0
8	DW	711	708	-18.4	0	0.1	0	-0.5	0
9	DW	714	709	-13.8	0	0.1	0	-0.9	0
10	DW	714	710	13.8	0	-0.1	0	-0.8	0
11	DW	717	711	-19.8	0	-0.1	0	1.8	0
12	DW	717	712	19.8	0	0.1	0	-0.2	0
13	DW	720	713	2	0	-0.9	0	6	0
14	DW	720	714	-2	0	0.9	0	5.6	0
15	DW	723	715	-46.3	0	-0.1	0	1.5	0
16	DW	723	716	46.3	0	0.1	0	0.8	0
17	DW	726	717	22.2	0	-0.6	0	5.7	0
18	DW	726	718	-22.2	0	0.6	0	3.9	0
19	DW	729	719	-55.1	0	0.2	0	-2.6	0
20	DW	729	720	55.1	0	-0.2	0	-1.3	0
21	DW	732	721	48.7	0	0	0	0	0
22	DW	732	722	-48.7	0	0	0	-1	0
1	TU-	702	701	-1.4	0	5.4	0	-48.2	0
2	TU-	702	702	1.4	0	-5.4	0	-22.3	0
3	TU-	705	703	-159.5	0	-0.3	0	1.9	0
4	TU-	705	704	159.5	0	0.3	0	6.3	0
5	TU-	708	705	30.4	0	3.8	0	-23.9	0
6	TU-	708	706	-30.4	0	-3.8	0	-17.7	0
7	TU-	711	707	-77.2	0	0.2	0	-5	0
8	TU-	711	708	77.2	0	-0.2	0	0.4	0
9	TU-	714	709	8.1	0	1.4	0	-7.9	0
10	TU-	714	710	-8.1	0	-1.4	0	-8.3	0
11	TU-	717	711	-17.4	0	0.1	0	-2.2	0
12	TU-	717	712	17.4	0	-0.1	0	0.8	0
13	TU-	720	713	-14.9	0	0	0	-0.6	0
14	TU-	720	714	14.9	0	0	0	0.3	0
15	TU-	723	715	27.7	0	0.2	0	-2.4	0
16	TU-	723	716	-27.7	0	-0.2	0	-1.2	0
17	TU-	726	717	-60	0	0.9	0	-11.7	0
18	TU-	726	718	60	0	-0.9	0	-2.7	0
19	TU-	729	719	47.4	0	-1.3	0	14.7	0
20	TU-	729	720	-47.4	0	1.3	0	6	0
21	TU-	732	721	-220.2	0	-1.4	0	14.6	0
22	TU-	732	722	220.2	0	1.4	0	18	0
1	TU+	702	701	1.4	0	-5.4	0	48.2	0
2	TU+	702	702	-1.4	0	5.4	0	22.3	0
3	TU+	705	703	159.5	0	0.3	0	-1.9	0
4	TU+	705	704	-159.5	0	-0.3	0	-6.3	0
5	TU+	708	705	-30.4	0	-3.8	0	23.9	0
6	TU+	708	706	30.4	0	3.8	0	17.7	0
7	TU+	711	707	77.2	0	-0.2	0	5	0
8	TU+	711	708	-77.2	0	0.2	0	-0.4	0
9	TU+	714	709	-8.1	0	-1.4	0	7.9	0
10	TU+	714	710	8.1	0	1.4	0	8.3	0
11	TU+	717	711	17.4	0	-0.1	0	2.2	0
12	TU+	717	712	-17.4	0	0.1	0	-0.8	0
13	TU+	720	713	14.9	0	0	0	0.6	0
14	TU+	720	714	-14.9	0	0	0	-0.3	0
15	TU+	723	715	-27.7	0	-0.2	0	2.4	0
16	TU+	723	716	27.7	0	0.2	0	1.2	0
17	TU+	726	717	60	0	-0.9	0	11.7	0
18	TU+	726	718	-60	0	0.9	0	2.7	0
19	TU+	729	719	-47.4	0	1.3	0	-14.7	0
20	TU+	729	720	47.4	0	-1.3	0	-6	0
21	TU+	732	721	220.2	0	1.4	0	-14.6	0
22	TU+	732	722	-220.2	0	-1.4	0	-18	0

Load (Row) Number	User's Load ID	Member ID	Joint ID	Fx (kips)	Fy (kips)	Fz (kips)	Mx (ft*kip)	My (ft*kip)	Mz (ft*kip)
1	TU+Temp. Diff.	702	701	3	0	-12.6	0	118.4	0
2	TU+Temp. Diff.	702	702	-3	0	12.6	0	46.9	0
3	TU+Temp. Diff.	705	703	321.4	0	0.2	0	4.5	0
4	TU+Temp. Diff.	705	704	-321.4	0	-0.2	0	-10.5	0
5	TU+Temp. Diff.	708	705	-54.7	0	-7.2	0	45.2	0
6	TU+Temp. Diff.	708	706	54.7	0	7.2	0	34	0
7	TU+Temp. Diff.	711	707	138.3	0	-0.3	0	9.3	0
8	TU+Temp. Diff.	711	708	-138.3	0	0.3	0	-0.8	0
9	TU+Temp. Diff.	714	709	-4.1	0	-2.3	0	12.5	0
10	TU+Temp. Diff.	714	710	4.1	0	2.3	0	14.2	0
11	TU+Temp. Diff.	717	711	10.3	0	-0.1	0	3.9	0
12	TU+Temp. Diff.	717	712	-10.3	0	0.1	0	-1.3	0
13	TU+Temp. Diff.	720	713	44.4	0	-0.5	0	4.8	0
14	TU+Temp. Diff.	720	714	-44.4	0	0.5	0	1.9	0
15	TU+Temp. Diff.	723	715	-75.6	0	-0.2	0	2.1	0
16	TU+Temp. Diff.	723	716	75.6	0	0.2	0	1.5	0
17	TU+Temp. Diff.	726	717	121.1	0	-1.3	0	17.4	0
18	TU+Temp. Diff.	726	718	-121.1	0	1.3	0	3.6	0
19	TU+Temp. Diff.	729	719	-102.3	0	2.6	0	-26	0
20	TU+Temp. Diff.	729	720	102.3	0	-2.6	0	-15.1	0
21	TU+Temp. Diff.	732	721	311.6	0	1.9	0	-20.2	0
22	TU+Temp. Diff.	732	722	-311.6	0	-1.9	0	-21.7	0
1	WS_0 DEG	702	701	0	-17.5	0	-8.3	0	-240.5
2	WS_0 DEG	702	702	0	15.9	0	8.3	0	21.4
3	WS_0 DEG	705	703	0	-3.1	0	53	0	-49.6
4	WS_0 DEG	705	704	0	-0.4	0	-53	0	9.4
5	WS_0 DEG	708	705	0	-4.9	0	9.9	0	-77.7
6	WS_0 DEG	708	706	0	3.6	0	-9.9	0	31.3
7	WS_0 DEG	711	707	0	-2.2	0	18.3	0	-24
8	WS_0 DEG	711	708	0	-1	0	-18.3	0	8.7
9	WS_0 DEG	714	709	0	-2.9	0	-0.6	0	-55.9
10	WS_0 DEG	714	710	0	1.5	0	0.6	0	29.7
11	WS_0 DEG	717	711	0	-1.9	0	13.1	0	-18.1
12	WS_0 DEG	717	712	0	-0.9	0	-13.1	0	5.9
13	WS_0 DEG	720	713	0	2.4	0	-7.4	0	41.7
14	WS_0 DEG	720	714	0	-0.8	0	7.4	0	-20.9
15	WS_0 DEG	723	715	0	-1.7	0	11.1	0	-15.3
16	WS_0 DEG	723	716	0	-0.7	0	-11.1	0	4.5
17	WS_0 DEG	726	717	0	2	0	-11.7	0	31.5
18	WS_0 DEG	726	718	0	0	0	11.7	0	-15.3
19	WS_0 DEG	729	719	0	-1.5	0	13.6	0	-20.9
20	WS_0 DEG	729	720	0	-0.4	0	-13.6	0	12.5
21	WS_0 DEG	732	721	0	2.1	0	-16.9	0	29.1
22	WS_0 DEG	732	722	0	0.6	0	16.9	0	-13
1	WS_15 DEG	702	701	-0.2	-16.1	0.8	-7.9	-5.2	-221.8
2	WS_15 DEG	702	702	0.2	14.6	-0.5	7.9	-3.1	20.6
3	WS_15 DEG	705	703	-13.9	-2.9	-0.1	49.5	1.1	-45.8
4	WS_15 DEG	705	704	13.3	-0.4	0.3	-49.5	4.9	9.5
5	WS_15 DEG	708	705	4.8	-4.3	0.2	9.2	-1.9	-71.5
6	WS_15 DEG	708	706	-4.9	3.1	0	-9.2	0.7	30.6
7	WS_15 DEG	711	707	-11	-2	0.1	17.2	-0.3	-22.3
8	WS_15 DEG	711	708	10.6	-1	0.2	-17.2	1.3	8.7
9	WS_15 DEG	714	709	4.2	-2.6	0.2	-0.7	-1.6	-51.4
10	WS_15 DEG	714	710	-4.2	1.2	0	0.7	0.1	29.1
11	WS_15 DEG	717	711	-8.5	-1.8	0.1	12.5	-0.4	-16.9
12	WS_15 DEG	717	712	8.1	-0.9	0.1	-12.5	1.1	6.1
13	WS_15 DEG	720	713	3.5	2.1	-0.1	-7.1	0.4	38.7
14	WS_15 DEG	720	714	-3.4	-0.6	-0.1	7.1	-0.6	-20.5
15	WS_15 DEG	723	715	-6.1	-1.6	0.1	10.7	-0.1	-14.4
16	WS_15 DEG	723	716	5.8	-0.7	0.2	-10.7	1	4.9
17	WS_15 DEG	726	717	3.9	1.8	-0.2	-11.3	1.3	29.6
18	WS_15 DEG	726	718	-3.7	0	0	11.3	-0.1	-14.7
19	WS_15 DEG	729	719	-1.7	-1.4	0.2	13	-1.9	-20.1
20	WS_15 DEG	729	720	1.6	-0.4	0	-13	0.1	12.4
21	WS_15 DEG	732	721	4.4	2	0.2	-16.1	-4	27.5
22	WS_15 DEG	732	722	-4	0.6	-0.4	16.1	-2.4	-12.3

Load (Row) Number	User's Load ID	Member ID	Joint ID	Fx (kips)	Fy (kips)	Fz (kips)	Mx (ft*kip)	My (ft*kip)	Mz (ft*kip)
1	WS_-15 DEG	702	701	0.2	-16.1	-0.8	-7.9	5.1	-221.8
2	WS_-15 DEG	702	702	-0.2	14.6	0.5	7.9	3.1	20.6
3	WS_-15 DEG	705	703	13.8	-2.9	0.1	49.5	-1.1	-45.8
4	WS_-15 DEG	705	704	-13.3	-0.4	-0.3	-49.5	-4.9	9.5
5	WS_-15 DEG	708	705	-4.8	-4.3	-0.2	9.2	1.8	-71.5
6	WS_-15 DEG	708	706	4.9	3.1	0	-9.2	-0.7	30.6
7	WS_-15 DEG	711	707	11	-2	-0.1	17.2	0.3	-22.3
8	WS_-15 DEG	711	708	-10.6	-1	-0.2	-17.2	-1.3	8.7
9	WS_-15 DEG	714	709	-4.2	-2.6	-0.2	-0.7	1.6	-51.4
10	WS_-15 DEG	714	710	4.2	1.2	0	0.7	-0.1	29.1
11	WS_-15 DEG	717	711	8.5	-1.8	-0.1	12.5	0.4	-16.9
12	WS_-15 DEG	717	712	-8.1	-0.9	-0.1	-12.5	-1.1	6.1
13	WS_-15 DEG	720	713	-3.5	2.1	0.1	-7.1	-0.4	38.7
14	WS_-15 DEG	720	714	3.4	-0.6	0.1	7.1	0.6	-20.5
15	WS_-15 DEG	723	715	6.1	-1.6	-0.1	10.7	0.1	-14.4
16	WS_-15 DEG	723	716	-5.8	-0.7	-0.2	-10.7	-1	4.9
17	WS_-15 DEG	726	717	-4	1.8	0.2	-11.3	-1.3	29.6
18	WS_-15 DEG	726	718	3.7	0	0	11.3	0.1	-14.7
19	WS_-15 DEG	729	719	1.7	-1.4	-0.2	13	1.9	-20.1
20	WS_-15 DEG	729	720	-1.6	-0.4	0	-13	-0.1	12.4
21	WS_-15 DEG	732	721	-4.4	2	-0.2	-16.1	4	27.5
22	WS_-15 DEG	732	722	4	0.6	0.4	16.1	2.4	-12.3
1	WS_30 DEG	702	701	-0.5	-14.7	1.5	-7.1	-10.1	-201.5
2	WS_30 DEG	702	702	0.5	13.3	-1	7.1	-6.1	18.4
3	WS_30 DEG	705	703	-27.9	-2.7	-0.1	44.7	2.1	-41.7
4	WS_30 DEG	705	704	26.7	-0.4	0.7	-44.7	9.4	8.4
5	WS_30 DEG	708	705	9.6	-4	0.5	8.3	-3.9	-64.7
6	WS_30 DEG	708	706	-9.8	2.8	0	-8.3	1.1	27.2
7	WS_30 DEG	711	707	-22.3	-1.9	0.2	15.4	-0.8	-20.2
8	WS_30 DEG	711	708	21.3	-0.9	0.3	-15.4	2.6	7.8
9	WS_30 DEG	714	709	8.5	-2.3	0.5	-0.6	-3.4	-46.2
10	WS_30 DEG	714	710	-8.5	1.1	0	0.6	0	25.9
11	WS_30 DEG	717	711	-17.3	-1.6	0.2	11.1	-0.9	-15.2
12	WS_30 DEG	717	712	16.4	-0.8	0.3	-11.1	2.3	5.5
13	WS_30 DEG	720	713	7.2	1.9	-0.3	-6.3	0.9	34.6
14	WS_30 DEG	720	714	-7	-0.5	-0.3	6.3	-1.1	-18.2
15	WS_30 DEG	723	715	-12.7	-1.5	0.2	9.5	-0.2	-12.9
16	WS_30 DEG	723	716	12	-0.6	0.4	-9.5	2.1	4.3
17	WS_30 DEG	726	717	8.5	1.7	-0.4	-10	2.8	26.5
18	WS_30 DEG	726	718	-8	0.1	-0.1	10	-0.1	-13.2
19	WS_30 DEG	729	719	-3.8	-1.3	0.5	11.6	-4	-17.8
20	WS_30 DEG	729	720	3.4	-0.4	0	-11.6	0	11.1
21	WS_30 DEG	732	721	10.1	1.8	0.3	-14.5	-8.4	24.8
22	WS_30 DEG	732	722	-9.2	0.6	-0.9	14.5	-5.2	-11.1
1	WS_-30 DEG	702	701	0.5	-14.7	-1.5	-7.1	10.1	-201.5
2	WS_-30 DEG	702	702	-0.5	13.3	0.9	7.1	6.1	18.4
3	WS_-30 DEG	705	703	27.8	-2.7	0.1	44.7	-2.1	-41.7
4	WS_-30 DEG	705	704	-26.6	-0.4	-0.7	-44.7	-9.4	8.5
5	WS_-30 DEG	708	705	-9.6	-4	-0.5	8.3	3.8	-64.7
6	WS_-30 DEG	708	706	9.8	2.8	0	-8.3	-1.1	27.2
7	WS_-30 DEG	711	707	22.3	-1.9	-0.2	15.4	0.8	-20.2
8	WS_-30 DEG	711	708	-21.2	-0.9	-0.3	-15.4	-2.6	7.8
9	WS_-30 DEG	714	709	-8.5	-2.3	-0.5	-0.6	3.4	-46.2
10	WS_-30 DEG	714	710	8.5	1.1	0	0.6	0	25.9
11	WS_-30 DEG	717	711	17.2	-1.6	-0.2	11.1	0.9	-15.2
12	WS_-30 DEG	717	712	-16.3	-0.8	-0.3	-11.1	-2.3	5.5
13	WS_-30 DEG	720	713	-7.2	1.9	0.3	-6.3	-0.9	34.6
14	WS_-30 DEG	720	714	7	-0.5	0.3	6.3	1.1	-18.2
15	WS_-30 DEG	723	715	12.7	-1.5	-0.2	9.5	0.2	-12.9
16	WS_-30 DEG	723	716	-12	-0.6	-0.4	-9.5	-2.1	4.3
17	WS_-30 DEG	726	717	-8.5	1.7	0.4	-10	-2.8	26.5
18	WS_-30 DEG	726	718	8	0.1	0.1	10	0.1	-13.2
19	WS_-30 DEG	729	719	3.8	-1.3	-0.5	11.6	4	-17.8
20	WS_-30 DEG	729	720	-3.4	-0.4	0	-11.6	0	11.1
21	WS_-30 DEG	732	721	-10	1.8	-0.3	-14.5	8.4	24.8
22	WS_-30 DEG	732	722	9.2	0.6	0.9	14.5	5.2	-11.1

Load (Row) Number	User's Load ID	Member ID	Joint ID	Fx (kips)	Fy (kips)	Fz (kips)	Mx (ft*kip)	My (ft*kip)	Mz (ft*kip)
1	WS_45 DEG	702	701	-0.7	-11.3	2.2	-5.8	-14.5	-156.3
2	WS_45 DEG	702	702	0.7	10.3	-1.3	5.8	-8.8	15.2
3	WS_45 DEG	705	703	-40.4	-2	-0.2	35.4	3	-32.2
4	WS_45 DEG	705	704	38.7	-0.2	1	-35.4	13.6	7.1
5	WS_45 DEG	708	705	14	-3	0.7	6.6	-5.6	-50.9
6	WS_45 DEG	708	706	-14.2	2.1	0	-6.6	1.5	22.8
7	WS_45 DEG	711	707	-32.4	-1.4	0.3	12.4	-1.2	-15.8
8	WS_45 DEG	711	708	30.9	-0.7	0.5	-12.4	3.8	6.3
9	WS_45 DEG	714	709	12.4	-1.7	0.8	-0.5	-5	-37.1
10	WS_45 DEG	714	710	-12.4	0.8	0	0.5	-0.1	21.8
11	WS_45 DEG	717	711	-25.1	-1.2	0.3	9.2	-1.3	-12.1
12	WS_45 DEG	717	712	23.8	-0.6	0.5	-9.2	3.3	4.5
13	WS_45 DEG	720	713	10.6	1.5	-0.4	-5.4	1.3	28.2
14	WS_45 DEG	720	714	-10.2	-0.5	-0.4	5.4	-1.5	-15.4
15	WS_45 DEG	723	715	-18.6	-1.1	0.3	8	-0.4	-10.6
16	WS_45 DEG	723	716	17.6	-0.4	0.5	-8	3.1	3.7
17	WS_45 DEG	726	717	12.6	1.3	-0.6	-8.4	4.2	21.5
18	WS_45 DEG	726	718	-11.8	0	-0.2	8.4	-0.1	-10.8
19	WS_45 DEG	729	719	-5.6	-1	0.8	9.6	-5.9	-14.9
20	WS_45 DEG	729	720	5	-0.2	0	-9.6	0	9.3
21	WS_45 DEG	732	721	15	1.3	0.5	-11.8	-12.4	19.7
22	WS_45 DEG	732	722	-13.7	0.4	-1.3	11.8	-7.6	-8.8
1	WS_-45 DEG	702	701	0.7	-11.3	-2.2	-5.8	14.5	-156.3
2	WS_-45 DEG	702	702	-0.7	10.3	1.3	5.8	8.8	15.2
3	WS_-45 DEG	705	703	40.4	-2	0.2	35.4	-3	-32.2
4	WS_-45 DEG	705	704	-38.6	-0.2	-1	-35.4	-13.6	7.1
5	WS_-45 DEG	708	705	-14	-3	-0.7	6.6	5.6	-50.8
6	WS_-45 DEG	708	706	14.2	2.1	0	-6.6	-1.5	22.8
7	WS_-45 DEG	711	707	32.4	-1.4	-0.3	12.4	1.2	-15.8
8	WS_-45 DEG	711	708	-30.8	-0.7	-0.5	-12.4	-3.8	6.3
9	WS_-45 DEG	714	709	-12.4	-1.7	-0.8	-0.5	5	-37.1
10	WS_-45 DEG	714	710	12.4	0.8	0	0.5	0.1	21.8
11	WS_-45 DEG	717	711	25.1	-1.2	-0.3	9.2	1.3	-12.1
12	WS_-45 DEG	717	712	-23.8	-0.6	-0.5	-9.2	-3.3	4.5
13	WS_-45 DEG	720	713	-10.5	1.5	0.4	-5.4	-1.3	28.2
14	WS_-45 DEG	720	714	10.2	-0.5	0.4	5.4	1.5	-15.4
15	WS_-45 DEG	723	715	18.6	-1.1	-0.3	8	0.4	-10.6
16	WS_-45 DEG	723	716	-17.5	-0.4	-0.5	-8	-3.1	3.7
17	WS_-45 DEG	726	717	-12.5	1.3	0.6	-8.4	-4.2	21.5
18	WS_-45 DEG	726	718	11.8	0	0.2	8.4	0.1	-10.8
19	WS_-45 DEG	729	719	5.6	-1	-0.8	9.6	5.9	-14.9
20	WS_-45 DEG	729	720	-5	-0.2	0	-9.6	0	9.3
21	WS_-45 DEG	732	721	-15	1.3	-0.5	-11.8	12.3	19.7
22	WS_-45 DEG	732	722	13.7	0.4	1.3	11.8	7.6	-8.8
1	WS_60 DEG	702	701	-0.8	-6.7	2.7	-4	-17.7	-95.7
2	WS_60 DEG	702	702	0.8	6.2	-1.6	4	-10.7	10.7
3	WS_60 DEG	705	703	-49	-1.1	-0.2	22.7	3.6	-19.6
4	WS_60 DEG	705	704	46.9	-0.1	1.2	-22.7	16.5	5.1
5	WS_60 DEG	708	705	17	-1.6	0.9	4.3	-6.8	-32
6	WS_60 DEG	708	706	-17.2	1.2	0	-4.3	1.9	16.6
7	WS_60 DEG	711	707	-39.3	-0.7	0.4	8.3	-1.4	-9.8
8	WS_60 DEG	711	708	37.4	-0.3	0.6	-8.3	4.7	4.2
9	WS_60 DEG	714	709	15	-0.9	1	-0.4	-6.1	-24.3
10	WS_60 DEG	714	710	-15	0.5	0	0.4	-0.1	16
11	WS_60 DEG	717	711	-30.5	-0.6	0.4	6.4	-1.6	-7.8
12	WS_60 DEG	717	712	28.9	-0.3	0.6	-6.4	4	3.2
13	WS_60 DEG	720	713	12.8	0.8	-0.5	-4	1.6	19.1
14	WS_60 DEG	720	714	-12.4	-0.3	-0.5	4	-1.8	-11.3
15	WS_60 DEG	723	715	-22.6	-0.6	0.3	5.8	-0.4	-7.3
16	WS_60 DEG	723	716	21.3	-0.2	0.7	-5.8	3.8	2.9
17	WS_60 DEG	726	717	15.2	0.7	-0.8	-6.1	5.1	14.5
18	WS_60 DEG	726	718	-14.3	-0.1	-0.2	6.1	-0.2	-7.5
19	WS_60 DEG	729	719	-6.8	-0.5	0.9	6.9	-7.1	-10.7
20	WS_60 DEG	729	720	6	-0.1	0.1	-6.9	0.1	6.8
21	WS_60 DEG	732	721	18.1	0.7	0.6	-8.2	-14.9	12.6
22	WS_60 DEG	732	722	-16.5	0.1	-1.5	8.2	-9.2	-5.6

Load (Row) Number	User's Load ID	Member ID	Joint ID	Fx (kips)	Fy (kips)	Fz (kips)	Mx (ft*kip)	My (ft*kip)	Mz (ft*kip)
1	WS_-60 DEG	702	701	0.8	-6.7	-2.7	-4	17.7	-95.7
2	WS_-60 DEG	702	702	-0.8	6.2	1.6	4	10.7	10.7
3	WS_-60 DEG	705	703	49.1	-1.1	0.2	22.7	-3.6	-19.6
4	WS_-60 DEG	705	704	-46.9	-0.1	-1.2	-22.7	-16.5	5.1
5	WS_-60 DEG	708	705	-17	-1.6	-0.9	4.3	6.8	-32
6	WS_-60 DEG	708	706	17.2	1.2	0	-4.3	-1.9	16.6
7	WS_-60 DEG	711	707	39.4	-0.7	-0.4	8.3	1.4	-9.8
8	WS_-60 DEG	711	708	-37.4	-0.3	-0.6	-8.3	-4.7	4.2
9	WS_-60 DEG	714	709	-15	-0.9	-1	-0.4	6.1	-24.3
10	WS_-60 DEG	714	710	15	0.5	0	0.4	0.1	16
11	WS_-60 DEG	717	711	30.5	-0.6	-0.4	6.4	1.6	-7.8
12	WS_-60 DEG	717	712	-28.9	-0.3	-0.6	-6.4	-4	3.2
13	WS_-60 DEG	720	713	-12.8	0.8	0.5	-4	-1.6	19.1
14	WS_-60 DEG	720	714	12.4	-0.3	0.5	4	1.8	-11.3
15	WS_-60 DEG	723	715	22.5	-0.6	-0.3	5.8	0.4	-7.3
16	WS_-60 DEG	723	716	-21.3	-0.2	-0.7	-5.8	-3.8	2.9
17	WS_-60 DEG	726	717	-15.2	0.7	0.8	-6.1	-5.1	14.5
18	WS_-60 DEG	726	718	14.2	-0.1	0.2	6.1	0.2	-7.5
19	WS_-60 DEG	729	719	6.8	-0.5	-0.9	6.9	7.1	-10.7
20	WS_-60 DEG	729	720	-6	-0.1	-0.1	-6.9	-0.1	6.8
21	WS_-60 DEG	732	721	-18.1	0.7	-0.6	-8.2	14.9	12.6
22	WS_-60 DEG	732	722	16.5	0.1	1.5	8.2	9.2	-5.6
1	WS+WUP	702	701	-6.8	-23.8	8	-8.7	-63.4	-344
2	WS+WUP	702	702	6.8	22.2	-8	8.7	-42	42.4
3	WS+WUP	705	703	-95	-3.9	-0.1	72.5	-7.3	-68.3
4	WS+WUP	705	704	95	0.4	0.1	-72.5	8.9	5.8
5	WS+WUP	708	705	30	-2.6	1.2	11.2	-9.6	-69.9
6	WS+WUP	708	706	-30	1.3	-1.2	-11.2	-3.9	48.8
7	WS+WUP	711	707	-23.3	-2.1	0.1	18.3	-3.2	-22.9
8	WS+WUP	711	708	23.3	-1.1	-0.1	-18.3	0.4	8.5
9	WS+WUP	714	709	8.9	2.8	-0.2	0.3	1.4	-9.4
10	WS+WUP	714	710	-8.9	-4.2	0.2	-0.3	0.6	50.8
11	WS+WUP	717	711	23.1	-1.3	0.1	8	-1.8	-5.3
12	WS+WUP	717	712	-23.1	-1.6	-0.1	-8	0.5	8.5
13	WS+WUP	720	713	-10.8	-4	1	-0.8	-7.4	-13.6
14	WS+WUP	720	714	10.8	5.6	-1	0.8	-6.6	-49.8
15	WS+WUP	723	715	54.2	0.2	0.1	4.6	-1.4	12.2
16	WS+WUP	723	716	-54.2	-2.6	-0.1	-4.6	-0.6	15.3
17	WS+WUP	726	717	-35.9	-1.4	0.7	-6.2	-7	1.9
18	WS+WUP	726	718	35.9	3.4	-0.7	6.2	-4.4	-41.9
19	WS+WUP	729	719	62.4	2.6	-0.4	9.3	4.4	22
20	WS+WUP	729	720	-62.4	-4.5	0.4	-9.3	2.6	34.8
21	WS+WUP	732	721	-65.4	1.7	-0.1	-20	0.9	30.4
22	WS+WUP	732	722	65.4	1	0.1	20	1.7	-21.7

Limit State: STRENGTH V

FR Friction
LF: 1
FR1: CR+SH+PT_EOC
FR2: CR+SH+PT_D10K

TU Uniform Temperature
LF: 0.5
TU1: TU-
TU2: TU+
TU3: TU+Temp. Diff.

WS Wind Load on Structure
LF: 0.4
WS1: WS_0 DEG_STRV
WS2: WS_15 DEG_STRV
WS3: WS_30 DEG_STRV
WS4: WS_45 DEG_STRV
WS5: WS_60 DEG_STRV
WS6: WS_-15 DEG_STRV
WS7: WS_-30 DEG_STRV
WS8: WS_-45 DEG_STRV
WS9: WS_-60 DEG_STRV

DW DL Wearing Surfaces & Utilities
LF1: 1.5
LF2: 0.65
DW1: DW

LL Vehicular Live Load
LF: 1.35
LL1: LL1_Deck
LL2: LL1_Deck Offset
LL3: LL1_Roof
LL4: LL2_Deck
LL5: LL2_Deck Offset
LL6: LL2_Roof
LL7: LL3_Deck
LL8: LL3_Deck Offset
LL9: LL3_Roof

DC DL Structural Components & Attachments
LF1: 1.25
LF2: 0.9
DC1: DC

Load (Row) Number	User's Load ID	Member ID	Joint ID	Fx (kips)	Fy (kips)	Fz (kips)	Mx (ft*kip)	My (ft*kip)	Mz (ft*kip)
1	CR+SH+PT_D10K	702	701	7.4	0	-48.2	0	387.9	0
2	CR+SH+PT_D10K	702	702	-7.4	0	48.3	0	244.2	0
3	CR+SH+PT_D10K	705	703	-0.4	0	3	0	-49.5	0
4	CR+SH+PT_D10K	705	704	0.4	0	-2.9	0	-36.2	0
5	CR+SH+PT_D10K	708	705	112.5	0	14.8	0	-96.6	0
6	CR+SH+PT_D10K	708	706	-112.5	0	-14.8	0	-65.3	0
7	CR+SH+PT_D10K	711	707	-210.6	0	-0.3	0	22.2	0
8	CR+SH+PT_D10K	711	708	210.6	0	0.3	0	-14.3	0
9	CR+SH+PT_D10K	714	709	144.5	0	24.9	0	-154.3	-0.1
10	CR+SH+PT_D10K	714	710	-144.5	0	-24.9	0	-139.8	0
11	CR+SH+PT_D10K	717	711	-301.3	0	-0.8	0	13.6	0
12	CR+SH+PT_D10K	717	712	301.3	0	0.8	0	4.2	0
13	CR+SH+PT_D10K	720	713	160.3	0	-16.5	0	112.5	0.1
14	CR+SH+PT_D10K	720	714	-160.3	0	16.5	0	107.5	0
15	CR+SH+PT_D10K	723	715	-236.8	0	-1.5	0	13.6	0
16	CR+SH+PT_D10K	723	716	236.8	0	1.4	0	15.5	0
17	CR+SH+PT_D10K	726	717	118.3	0	-5.7	0	40.5	0
18	CR+SH+PT_D10K	726	718	-118.3	0	5.7	0	54.8	0
19	CR+SH+PT_D10K	729	719	-121.5	0	-7.1	0	51.2	0
20	CR+SH+PT_D10K	729	720	121.6	0	7	0	60.6	0
21	CR+SH+PT_D10K	732	721	-57.3	0	-3.2	0	45.7	0
22	CR+SH+PT_D10K	732	722	57.3	0	3.2	0	27.4	0
1	CR+SH+PT_EOC	702	701	-5.3	0	0	0	0	0
2	CR+SH+PT_EOC	702	702	5.3	0	0	0	0	0
3	CR+SH+PT_EOC	705	703	-184.7	0	2.7	0	-26.9	0
4	CR+SH+PT_EOC	705	704	184.7	0	-2.7	0	-51.6	0
5	CR+SH+PT_EOC	708	705	109.4	0	22.8	0	-136.4	-0.1
6	CR+SH+PT_EOC	708	706	-109.4	0	-22.8	0	-113.6	0
7	CR+SH+PT_EOC	711	707	-248.8	0	-0.1	0	13.4	0
8	CR+SH+PT_EOC	711	708	248.8	0	0.1	0	-11.3	0
9	CR+SH+PT_EOC	714	709	122.1	0	23.7	0	-147.7	-0.1
10	CR+SH+PT_EOC	714	710	-122.1	0	-23.7	0	-132.6	0
11	CR+SH+PT_EOC	717	711	-250.1	0	-0.8	0	13.2	0
12	CR+SH+PT_EOC	717	712	250.1	0	0.7	0	4.5	0
13	CR+SH+PT_EOC	720	713	127	0	-15.7	0	106.3	0
14	CR+SH+PT_EOC	720	714	-127	0	15.7	0	102.9	0
15	CR+SH+PT_EOC	723	715	-187.2	0	-1.8	0	17.2	0
16	CR+SH+PT_EOC	723	716	187.2	0	1.8	0	18.4	0
17	CR+SH+PT_EOC	726	717	108.9	0	-5.7	0	42.7	0
18	CR+SH+PT_EOC	726	718	-108.9	0	5.7	0	52.7	0
19	CR+SH+PT_EOC	729	719	-108.6	0	-6.7	0	49.2	0
20	CR+SH+PT_EOC	729	720	108.6	0	6.7	0	57.7	0
21	CR+SH+PT_EOC	732	721	36.1	0	-2.9	0	42.2	0
22	CR+SH+PT_EOC	732	722	-36.1	0	2.9	0	22.9	0
1	DC	702	701	63	0	0	0.1	0	0
2	DC	702	702	-52.7	0	0	-0.1	0	0
3	DC	705	703	1854.3	0	0.4	-0.1	299	0.1
4	DC	705	704	-1844.8	0	20.5	0.1	-5.5	0
5	DC	708	705	-609	0	-25.9	0	190.2	0.1
6	DC	708	706	614.5	0	27.7	0	103.7	0
7	DC	711	707	731.2	0	3.7	0	36.8	0
8	DC	711	708	-724.9	0	8.8	0	31.9	0
9	DC	714	709	-242.4	0	-16	0	83.7	0
10	DC	714	710	248.6	0	16.1	0	106.6	0
11	DC	717	711	26.5	0	3.5	0	31.2	0
12	DC	717	712	-20.1	0	7.3	0	14	0
13	DC	720	713	86.7	0	-6.5	0	59.9	0
14	DC	720	714	-80.1	0	9	0	43.4	0
15	DC	723	715	-587.5	0	1.2	0	29.4	0
16	DC	723	716	593.9	0	7.2	0	31.4	0
17	DC	726	717	601	0	-6.6	0	110.5	0.1
18	DC	726	718	-594.6	0	12.6	0	48.6	0
19	DC	729	719	-870.6	0	12.6	0	-102.1	0
20	DC	729	720	877.2	0	-7.5	0	-57.4	-0.1
21	DC	732	721	1386.5	0	10.4	0	-68	0
22	DC	732	722	-1380.4	0	-0.3	0	-52.6	0

Load (Row) Number	User's Load ID	Member ID	Joint ID	Fx (kips)	Fy (kips)	Fz (kips)	Mx (ft*kip)	My (ft*kip)	Mz (ft*kip)
1	DW	702	701	1	0	-5	0	51.7	0
2	DW	702	702	-1	0	5	0	13.9	0
3	DW	705	703	75.3	0	-0.3	0	10.8	0
4	DW	705	704	-75.3	0	0.3	0	-1.9	0
5	DW	708	705	-32.2	0	-1.2	0	8.2	0
6	DW	708	706	32.2	0	1.2	0	5.4	0
7	DW	711	707	18.4	0	-0.1	0	2.4	0
8	DW	711	708	-18.4	0	0.1	0	-0.5	0
9	DW	714	709	-13.8	0	0.1	0	-0.9	0
10	DW	714	710	13.8	0	-0.1	0	-0.8	0
11	DW	717	711	-19.8	0	-0.1	0	1.8	0
12	DW	717	712	19.8	0	0.1	0	-0.2	0
13	DW	720	713	2	0	-0.9	0	6	0
14	DW	720	714	-2	0	0.9	0	5.6	0
15	DW	723	715	-46.3	0	-0.1	0	1.5	0
16	DW	723	716	46.3	0	0.1	0	0.8	0
17	DW	726	717	22.2	0	-0.6	0	5.7	0
18	DW	726	718	-22.2	0	0.6	0	3.9	0
19	DW	729	719	-55.1	0	0.2	0	-2.6	0
20	DW	729	720	55.1	0	-0.2	0	-1.3	0
21	DW	732	721	48.7	0	0	0	0	0
22	DW	732	722	-48.7	0	0	0	-1	0
1	LL1_Deck	702	701	3.8	0	-18.3	0	189	0
2	LL1_Deck	702	702	-3.8	0	18.3	0	50.9	0
3	LL1_Deck	705	703	275.4	0	-1.1	0	39.3	0
4	LL1_Deck	705	704	-275.4	0	1.1	0	-6.8	0
5	LL1_Deck	708	705	-117.8	0	-4.5	0	30.1	0
6	LL1_Deck	708	706	117.8	0	4.5	0	19.6	0
7	LL1_Deck	711	707	67.3	0	-0.3	0	8.9	0
8	LL1_Deck	711	708	-67.3	0	0.3	0	-2	0
9	LL1_Deck	714	709	-50.5	0	0.5	0	-3.4	0
10	LL1_Deck	714	710	50.5	0	-0.5	0	-3	0
11	LL1_Deck	717	711	-72.5	0	-0.2	0	6.4	0
12	LL1_Deck	717	712	72.5	0	0.2	0	-0.7	0
13	LL1_Deck	720	713	7.2	0	-3.2	0	22.1	0
14	LL1_Deck	720	714	-7.2	0	3.2	0	20.3	0
15	LL1_Deck	723	715	-169.4	0	-0.4	0	5.7	0
16	LL1_Deck	723	716	169.4	0	0.4	0	2.8	0
17	LL1_Deck	726	717	81.3	0	-2.1	0	20.8	0
18	LL1_Deck	726	718	-81.3	0	2.1	0	14.3	0
19	LL1_Deck	729	719	-201.5	0	0.9	0	-9.5	0
20	LL1_Deck	729	720	201.5	0	-0.9	0	-4.7	0
21	LL1_Deck	732	721	178.3	0	0.1	0	0.1	0
22	LL1_Deck	732	722	-178.3	0	-0.1	0	-3.5	0
1	LL1_Deck Offset	702	701	1.9	-9.8	-9.2	-3.1	94.5	-122
2	LL1_Deck Offset	702	702	-1.9	9.8	9.2	3.1	25.5	-6.1
3	LL1_Deck Offset	705	703	137.7	-1.4	-0.6	13.1	19.7	-25.9
4	LL1_Deck Offset	705	704	-137.7	1.4	0.6	-13.1	-3.4	-15.4
5	LL1_Deck Offset	708	705	-58.9	3.3	-2.3	-7.2	15	42.6
6	LL1_Deck Offset	708	706	58.9	-3.3	2.3	7.2	9.8	-6.8
7	LL1_Deck Offset	711	707	33.7	0	-0.1	-10.9	4.5	7.3
8	LL1_Deck Offset	711	708	-33.7	0	0.1	10.9	-1	-7.1
9	LL1_Deck Offset	714	709	-25.3	8.9	0.3	-0.3	-1.7	111
10	LL1_Deck Offset	714	710	25.3	-8.9	-0.3	0.3	-1.5	-5.4
11	LL1_Deck Offset	717	711	-36.2	1	-0.1	-20.5	3.2	28.6
12	LL1_Deck Offset	717	712	36.2	-1	0.1	20.5	-0.4	-4.4
13	LL1_Deck Offset	720	713	3.6	-9.6	-1.6	19.1	11.1	-118.2
14	LL1_Deck Offset	720	714	-3.6	9.6	1.6	-19.1	10.2	-10
15	LL1_Deck Offset	723	715	-84.7	2.9	-0.2	-23.7	2.8	54.8
16	LL1_Deck Offset	723	716	84.7	-2.9	0.2	23.7	1.4	4.5
17	LL1_Deck Offset	726	717	40.6	-4.5	-1.1	21.1	10.4	-58.6
18	LL1_Deck Offset	726	718	-40.6	4.5	1.1	-21.1	7.1	-16.6
19	LL1_Deck Offset	729	719	-100.7	6.2	0.4	-17.6	-4.8	81.7
20	LL1_Deck Offset	729	720	100.7	-6.2	-0.4	17.6	-2.3	16.1
21	LL1_Deck Offset	732	721	89.2	0.2	0.1	1.3	0.1	4.7
22	LL1_Deck Offset	732	722	-89.2	-0.2	-0.1	-1.3	-1.7	0.2

Load (Row) Number	User's Load ID	Member ID	Joint ID	Fx (kips)	Fy (kips)	Fz (kips)	Mx (ft*kip)	My (ft*kip)	Mz (ft*kip)
1	LL1_Roof	702	701	5.9	0	-3.7	0	19.1	0
2	LL1_Roof	702	702	-5.9	0	3.7	0	30	0
3	LL1_Roof	705	703	30.4	0	0.3	0	-1.9	0
4	LL1_Roof	705	704	-30.4	0	-0.3	0	-7.3	0
5	LL1_Roof	708	705	-2.3	0	-0.2	0	2.5	0
6	LL1_Roof	708	706	2.3	0	0.2	0	-0.7	0
7	LL1_Roof	711	707	7.4	0	0	0	1.1	0
8	LL1_Roof	711	708	-7.4	0	0	0	0.1	0
9	LL1_Roof	714	709	3	0	0	0	-0.6	0
10	LL1_Roof	714	710	-3	0	0	0	0.1	0
11	LL1_Roof	717	711	-6.2	0	0	0	0.3	0
12	LL1_Roof	717	712	6.2	0	0	0	-0.3	0
13	LL1_Roof	720	713	9.1	0	-0.3	0	2.2	0
14	LL1_Roof	720	714	-9.1	0	0.3	0	1.8	0
15	LL1_Roof	723	715	-14.5	0	0	0	0.1	0
16	LL1_Roof	723	716	14.5	0	0	0	0	0
17	LL1_Roof	726	717	16.8	0	-0.2	0	2.1	0
18	LL1_Roof	726	718	-16.8	0	0.2	0	1	0
19	LL1_Roof	729	719	-15.2	0	0.2	0	-2.2	0
20	LL1_Roof	729	720	15.2	0	-0.2	0	-1.5	0
21	LL1_Roof	732	721	23.7	0	0.1	0	-1	0
22	LL1_Roof	732	722	-23.7	0	-0.1	0	-0.9	0
1	LL2_Deck	702	701	4.2	0	-20.4	0	208.6	0.1
2	LL2_Deck	702	702	-4.2	0	20.4	0	58.1	0
3	LL2_Deck	705	703	324.2	0	-1.1	0	40.8	0
4	LL2_Deck	705	704	-324.2	0	1.1	0	-7.9	0
5	LL2_Deck	708	705	-132.3	0	-5.8	0	38.2	0
6	LL2_Deck	708	706	132.3	0	5.8	0	25.4	0
7	LL2_Deck	711	707	100.4	0	-0.3	0	10.2	0
8	LL2_Deck	711	708	-100.4	0	0.3	0	-2.3	0
9	LL2_Deck	714	709	-59.7	0	-0.3	0	1.9	0
10	LL2_Deck	714	710	59.7	0	0.3	0	1.6	0
11	LL2_Deck	717	711	-53.5	0	-0.3	0	7.5	0
12	LL2_Deck	717	712	53.5	0	0.3	0	-1.2	0
13	LL2_Deck	720	713	4.5	0	-3	0	21.1	0
14	LL2_Deck	720	714	-4.5	0	3	0	19.1	0
15	LL2_Deck	723	715	-165.3	0	-0.5	0	6.4	0
16	LL2_Deck	723	716	165.3	0	0.5	0	2.7	0
17	LL2_Deck	726	717	89.9	0	-2.1	0	21.8	0
18	LL2_Deck	726	718	-89.9	0	2.1	0	14	0
19	LL2_Deck	729	719	-209.5	0	1.1	0	-10.7	0
20	LL2_Deck	729	720	209.5	0	-1.1	0	-6.2	0
21	LL2_Deck	732	721	199.9	0	0.2	0	0.4	0
22	LL2_Deck	732	722	-199.9	0	-0.2	0	-4.2	0
1	LL2_Deck Offset	702	701	2.1	-10.2	-10.2	-3.4	104.3	-127.4
2	LL2_Deck Offset	702	702	-2.1	10.2	10.2	3.4	29	-5.7
3	LL2_Deck Offset	705	703	162.1	-1.5	-0.6	14.2	20.4	-27.1
4	LL2_Deck Offset	705	704	-162.1	1.5	0.6	-14.2	-4	-15.5
5	LL2_Deck Offset	708	705	-66.2	3	-2.9	-7	19.1	40
6	LL2_Deck Offset	708	706	66.2	-3	2.9	7	12.7	-7
7	LL2_Deck Offset	711	707	50.2	0	-0.1	-10.4	5.1	6.6
8	LL2_Deck Offset	711	708	-50.2	0	0.1	10.4	-1.2	-7.3
9	LL2_Deck Offset	714	709	-29.9	8.6	-0.2	-0.3	1	108
10	LL2_Deck Offset	714	710	29.9	-8.6	0.2	0.3	0.8	-6.1
11	LL2_Deck Offset	717	711	-26.7	1	-0.1	-20.2	3.8	27.8
12	LL2_Deck Offset	717	712	26.7	-1	0.1	20.2	-0.6	-5
13	LL2_Deck Offset	720	713	2.3	-9.3	-1.5	18.9	10.5	-114.9
14	LL2_Deck Offset	720	714	-2.3	9.3	1.5	-18.9	9.6	-8.7
15	LL2_Deck Offset	723	715	-82.7	2.8	-0.2	-23.5	3.2	53.6
16	LL2_Deck Offset	723	716	82.7	-2.8	0.2	23.5	1.4	2.8
17	LL2_Deck Offset	726	717	45	-4.3	-1.1	20.9	10.9	-56.1
18	LL2_Deck Offset	726	718	-45	4.3	1.1	-20.9	7	-15.6
19	LL2_Deck Offset	729	719	-104.7	5.9	0.5	-17.3	-5.3	80.5
20	LL2_Deck Offset	729	720	104.7	-5.9	-0.5	17.3	-3.1	12.7
21	LL2_Deck Offset	732	721	100	0.2	0.1	1.3	0.2	5.7
22	LL2_Deck Offset	732	722	-100	-0.2	-0.1	-1.3	-2.1	-0.4

Load (Row) Number	User's Load ID	Member ID	Joint ID	Fx (kips)	Fy (kips)	Fz (kips)	Mx (ft*kip)	My (ft*kip)	Mz (ft*kip)
1	LL2_Roof	702	701	6	0	-4	0	21.2	0
2	LL2_Roof	702	702	-6	0	4	0	30.8	0
3	LL2_Roof	705	703	35.5	0	0.3	0	-1.7	0
4	LL2_Roof	705	704	-35.5	0	-0.3	0	-7.4	0
5	LL2_Roof	708	705	-3.8	0	-0.3	0	3.3	0
6	LL2_Roof	708	706	3.8	0	0.3	0	-0.1	0
7	LL2_Roof	711	707	10.8	0	0	0	1.3	0
8	LL2_Roof	711	708	-10.8	0	0	0	0	0
9	LL2_Roof	714	709	2.1	0	0	0	-0.1	0
10	LL2_Roof	714	710	-2.1	0	0	0	0.6	0
11	LL2_Roof	717	711	-4.3	0	0	0	0.4	0
12	LL2_Roof	717	712	4.3	0	0	0	-0.4	0
13	LL2_Roof	720	713	9	0	-0.3	0	2.1	0
14	LL2_Roof	720	714	-9	0	0.3	0	1.7	0
15	LL2_Roof	723	715	-14.4	0	0	0	0.2	0
16	LL2_Roof	723	716	14.4	0	0	0	0	0
17	LL2_Roof	726	717	18.2	0	-0.2	0	2.3	0
18	LL2_Roof	726	718	-18.2	0	0.2	0	1	0
19	LL2_Roof	729	719	-16.3	0	0.3	0	-2.5	0
20	LL2_Roof	729	720	16.3	0	-0.3	0	-1.7	0
21	LL2_Roof	732	721	26.9	0	0.1	0	-1.2	0
22	LL2_Roof	732	722	-26.9	0	-0.1	0	-1.1	0
1	LL3_Deck	702	701	-0.5	0	2	0	-19.7	-0.1
2	LL3_Deck	702	702	0.5	0	-2	0	-7.2	0
3	LL3_Deck	705	703	-48.8	0	0	0	-1.4	0
4	LL3_Deck	705	704	48.8	0	0	0	1.1	0
5	LL3_Deck	708	705	14.5	0	1.3	0	-8.1	0
6	LL3_Deck	708	706	-14.5	0	-1.3	0	-5.8	0
7	LL3_Deck	711	707	-33.1	0	0	0	-1.3	0
8	LL3_Deck	711	708	33.1	0	0	0	0.3	0
9	LL3_Deck	714	709	9.2	0	0.8	0	-5.3	0
10	LL3_Deck	714	710	-9.2	0	-0.8	0	-4.6	0
11	LL3_Deck	717	711	-19	0	0	0	-1.1	0
12	LL3_Deck	717	712	19	0	0	0	0.5	0
13	LL3_Deck	720	713	2.7	0	-0.2	0	1	0
14	LL3_Deck	720	714	-2.7	0	0.2	0	1.2	0
15	LL3_Deck	723	715	-4.1	0	0	0	-0.8	0
16	LL3_Deck	723	716	4.1	0	0	0	0.1	0
17	LL3_Deck	726	717	-8.6	0	0	0	-1	0
18	LL3_Deck	726	718	8.6	0	0	0	0.3	0
19	LL3_Deck	729	719	8	0	-0.2	0	1.2	0
20	LL3_Deck	729	720	-8	0	0.2	0	1.5	0
21	LL3_Deck	732	721	-21.6	0	0	0	-0.3	0
22	LL3_Deck	732	722	21.6	0	0	0	0.7	0
1	LL3_Deck Offset	702	701	-0.2	0.4	1	0.3	-9.8	5.3
2	LL3_Deck Offset	702	702	0.2	-0.4	-1	-0.3	-3.6	-0.4
3	LL3_Deck Offset	705	703	-24.4	0	0	-1.1	-0.7	1.2
4	LL3_Deck Offset	705	704	24.4	0	0	1.1	0.5	0.1
5	LL3_Deck Offset	708	705	7.2	0.3	0.6	-0.1	-4	2.6
6	LL3_Deck Offset	708	706	-7.2	-0.3	-0.6	0.1	-2.9	0.2
7	LL3_Deck Offset	711	707	-16.5	0	0	-0.4	-0.6	0.7
8	LL3_Deck Offset	711	708	16.5	0	0	0.4	0.2	0.2
9	LL3_Deck Offset	714	709	4.6	0.3	0.4	0	-2.7	2.9
10	LL3_Deck Offset	714	710	-4.6	-0.3	-0.4	0	-2.3	0.7
11	LL3_Deck Offset	717	711	-9.5	0.1	0	-0.3	-0.5	0.8
12	LL3_Deck Offset	717	712	9.5	-0.1	0	0.3	0.2	0.6
13	LL3_Deck Offset	720	713	1.4	-0.3	-0.1	0.2	0.5	-3.3
14	LL3_Deck Offset	720	714	-1.4	0.3	0.1	-0.2	0.6	-1.3
15	LL3_Deck Offset	723	715	-2	0.1	0	-0.2	-0.4	1.1
16	LL3_Deck Offset	723	716	2	-0.1	0	0.2	0.1	1.7
17	LL3_Deck Offset	726	717	-4.3	-0.2	0	0.1	-0.5	-2.5
18	LL3_Deck Offset	726	718	4.3	0.2	0	-0.1	0.2	-1
19	LL3_Deck Offset	729	719	4	0.3	-0.1	-0.3	0.6	1.2
20	LL3_Deck Offset	729	720	-4	-0.3	0.1	0.3	0.7	3.4
21	LL3_Deck Offset	732	721	-10.8	0	0	0	-0.1	-1
22	LL3_Deck Offset	732	722	10.8	0	0	0	0.3	0.6

Load (Row) Number	User's Load ID	Member ID	Joint ID	Fx (kips)	Fy (kips)	Fz (kips)	Mx (ft*kip)	My (ft*kip)	Mz (ft*kip)
1	LL3_Roof	702	701	0	0	0.2	0	-2.1	0
2	LL3_Roof	702	702	0	0	-0.2	0	-0.8	0
3	LL3_Roof	705	703	-5.1	0	0	0	-0.2	0
4	LL3_Roof	705	704	5.1	0	0	0	0.1	0
5	LL3_Roof	708	705	1.5	0	0.1	0	-0.8	0
6	LL3_Roof	708	706	-1.5	0	-0.1	0	-0.6	0
7	LL3_Roof	711	707	-3.4	0	0	0	-0.1	0
8	LL3_Roof	711	708	3.4	0	0	0	0	0
9	LL3_Roof	714	709	0.9	0	0.1	0	-0.5	0
10	LL3_Roof	714	710	-0.9	0	-0.1	0	-0.5	0
11	LL3_Roof	717	711	-1.8	0	0	0	-0.1	0
12	LL3_Roof	717	712	1.8	0	0	0	0	0
13	LL3_Roof	720	713	0.1	0	0	0	0.1	0
14	LL3_Roof	720	714	-0.1	0	0	0	0.1	0
15	LL3_Roof	723	715	-0.1	0	0	0	-0.1	0
16	LL3_Roof	723	716	0.1	0	0	0	0	0
17	LL3_Roof	726	717	-1.4	0	0	0	-0.2	0
18	LL3_Roof	726	718	1.4	0	0	0	0	0
19	LL3_Roof	729	719	1.2	0	0	0	0.3	0
20	LL3_Roof	729	720	-1.2	0	0	0	0.2	0
21	LL3_Roof	732	721	-3.2	0	0	0	0.2	0
22	LL3_Roof	732	722	3.2	0	0	0	0.2	0
1	TU-	702	701	-1.4	0	5.4	0	-48.2	0
2	TU-	702	702	1.4	0	-5.4	0	-22.3	0
3	TU-	705	703	-159.5	0	-0.3	0	1.9	0
4	TU-	705	704	159.5	0	0.3	0	6.3	0
5	TU-	708	705	30.4	0	3.8	0	-23.9	0
6	TU-	708	706	-30.4	0	-3.8	0	-17.7	0
7	TU-	711	707	-77.2	0	0.2	0	-5	0
8	TU-	711	708	77.2	0	-0.2	0	0.4	0
9	TU-	714	709	8.1	0	1.4	0	-7.9	0
10	TU-	714	710	-8.1	0	-1.4	0	-8.3	0
11	TU-	717	711	-17.4	0	0.1	0	-2.2	0
12	TU-	717	712	17.4	0	-0.1	0	0.8	0
13	TU-	720	713	-14.9	0	0	0	-0.6	0
14	TU-	720	714	14.9	0	0	0	0.3	0
15	TU-	723	715	27.7	0	0.2	0	-2.4	0
16	TU-	723	716	-27.7	0	-0.2	0	-1.2	0
17	TU-	726	717	-60	0	0.9	0	-11.7	0
18	TU-	726	718	60	0	-0.9	0	-2.7	0
19	TU-	729	719	47.4	0	-1.3	0	14.7	0
20	TU-	729	720	-47.4	0	1.3	0	6	0
21	TU-	732	721	-220.2	0	-1.4	0	14.6	0
22	TU-	732	722	220.2	0	1.4	0	18	0
1	TU+	702	701	1.4	0	-5.4	0	48.2	0
2	TU+	702	702	-1.4	0	5.4	0	22.3	0
3	TU+	705	703	159.5	0	0.3	0	-1.9	0
4	TU+	705	704	-159.5	0	-0.3	0	-6.3	0
5	TU+	708	705	-30.4	0	-3.8	0	23.9	0
6	TU+	708	706	30.4	0	3.8	0	17.7	0
7	TU+	711	707	77.2	0	-0.2	0	5	0
8	TU+	711	708	-77.2	0	0.2	0	-0.4	0
9	TU+	714	709	-8.1	0	-1.4	0	7.9	0
10	TU+	714	710	8.1	0	1.4	0	8.3	0
11	TU+	717	711	17.4	0	-0.1	0	2.2	0
12	TU+	717	712	-17.4	0	0.1	0	-0.8	0
13	TU+	720	713	14.9	0	0	0	0.6	0
14	TU+	720	714	-14.9	0	0	0	-0.3	0
15	TU+	723	715	-27.7	0	-0.2	0	2.4	0
16	TU+	723	716	27.7	0	0.2	0	1.2	0
17	TU+	726	717	60	0	-0.9	0	11.7	0
18	TU+	726	718	-60	0	0.9	0	2.7	0
19	TU+	729	719	-47.4	0	1.3	0	-14.7	0
20	TU+	729	720	47.4	0	-1.3	0	-6	0
21	TU+	732	721	220.2	0	1.4	0	-14.6	0
22	TU+	732	722	-220.2	0	-1.4	0	-18	0

Load (Row) Number	User's Load ID	Member ID	Joint ID	Fx (kips)	Fy (kips)	Fz (kips)	Mx (ft*kip)	My (ft*kip)	Mz (ft*kip)
1	TU+Temp. Diff.	702	701	3	0	-12.6	0	118.4	0
2	TU+Temp. Diff.	702	702	-3	0	12.6	0	46.9	0
3	TU+Temp. Diff.	705	703	321.4	0	0.2	0	4.5	0
4	TU+Temp. Diff.	705	704	-321.4	0	-0.2	0	-10.5	0
5	TU+Temp. Diff.	708	705	-54.7	0	-7.2	0	45.2	0
6	TU+Temp. Diff.	708	706	54.7	0	7.2	0	34	0
7	TU+Temp. Diff.	711	707	138.3	0	-0.3	0	9.3	0
8	TU+Temp. Diff.	711	708	-138.3	0	0.3	0	-0.8	0
9	TU+Temp. Diff.	714	709	-4.1	0	-2.3	0	12.5	0
10	TU+Temp. Diff.	714	710	4.1	0	2.3	0	14.2	0
11	TU+Temp. Diff.	717	711	10.3	0	-0.1	0	3.9	0
12	TU+Temp. Diff.	717	712	-10.3	0	0.1	0	-1.3	0
13	TU+Temp. Diff.	720	713	44.4	0	-0.5	0	4.8	0
14	TU+Temp. Diff.	720	714	-44.4	0	0.5	0	1.9	0
15	TU+Temp. Diff.	723	715	-75.6	0	-0.2	0	2.1	0
16	TU+Temp. Diff.	723	716	75.6	0	0.2	0	1.5	0
17	TU+Temp. Diff.	726	717	121.1	0	-1.3	0	17.4	0
18	TU+Temp. Diff.	726	718	-121.1	0	1.3	0	3.6	0
19	TU+Temp. Diff.	729	719	-102.3	0	2.6	0	-26	0
20	TU+Temp. Diff.	729	720	102.3	0	-2.6	0	-15.1	0
21	TU+Temp. Diff.	732	721	311.6	0	1.9	0	-20.2	0
22	TU+Temp. Diff.	732	722	-311.6	0	-1.9	0	-21.7	0
1	WS_0 DEG_STRV	702	701	0	-14.9	0	-7.2	-0.1	-201.5
2	WS_0 DEG_STRV	702	702	0	13.7	0	7.2	0	14.1
3	WS_0 DEG_STRV	705	703	-0.2	-2.8	0	41.2	0	-42.5
4	WS_0 DEG_STRV	705	704	0.2	-0.1	0	-41.2	0	3.8
5	WS_0 DEG_STRV	708	705	0.1	-2.7	0	4.8	0	-44.1
6	WS_0 DEG_STRV	708	706	-0.1	1.6	0	-4.8	0	20.6
7	WS_0 DEG_STRV	711	707	-0.1	-1.7	0	10.4	0	-15.7
8	WS_0 DEG_STRV	711	708	0.1	-0.9	0	-10.4	0	5.7
9	WS_0 DEG_STRV	714	709	0	0.1	0	-1.2	0	-11.2
10	WS_0 DEG_STRV	714	710	0	-1.3	0	1.2	0	19.6
11	WS_0 DEG_STRV	717	711	-0.1	-1.2	0	4.5	0	-6.4
12	WS_0 DEG_STRV	717	712	0.1	-1.1	0	-4.5	0	4.9
13	WS_0 DEG_STRV	720	713	0	-0.6	0	-1.2	0	0.1
14	WS_0 DEG_STRV	720	714	0	1.9	0	1.2	0	-16.2
15	WS_0 DEG_STRV	723	715	0	-0.6	0	2.2	0	1.2
16	WS_0 DEG_STRV	723	716	0	-1.3	0	-2.2	0	5.9
17	WS_0 DEG_STRV	726	717	0	0.6	0	-3.2	0	8.9
18	WS_0 DEG_STRV	726	718	0	1.1	0	3.2	0	-13
19	WS_0 DEG_STRV	729	719	0	0.2	0	5.2	0	2.3
20	WS_0 DEG_STRV	729	720	0	-1.7	0	-5.2	0	12.9
21	WS_0 DEG_STRV	732	721	0	1.8	0	-11.2	0	23.6
22	WS_0 DEG_STRV	732	722	0	0.4	0	11.2	0	-8.6
1	WS_15 DEG_STRV	702	701	-0.2	-13.2	0.5	-6.7	-3.7	-179.4
2	WS_15 DEG_STRV	702	702	0.2	12.1	-0.4	6.7	-2.3	13.5
3	WS_15 DEG_STRV	705	703	-11.4	-2.4	-0.1	37.3	0.9	-37.8
4	WS_15 DEG_STRV	705	704	11.1	0	0.2	-37.3	3.3	3.8
5	WS_15 DEG_STRV	708	705	3.9	-2.1	0.2	4.2	-1.7	-38.1
6	WS_15 DEG_STRV	708	706	-4	1.2	-0.1	-4.2	0.1	20.2
7	WS_15 DEG_STRV	711	707	-9.1	-1.4	0.1	9.5	-0.3	-13.7
8	WS_15 DEG_STRV	711	708	8.8	-0.8	0.1	-9.5	0.9	5.4
9	WS_15 DEG_STRV	714	709	3.5	0.5	0.2	-1.3	-1.5	-8.1
10	WS_15 DEG_STRV	714	710	-3.5	-1.5	-0.1	1.3	-0.3	19.5
11	WS_15 DEG_STRV	717	711	-7	-1	0.1	4.1	-0.4	-5.3
12	WS_15 DEG_STRV	717	712	6.7	-0.9	0.1	-4.1	0.8	4.8
13	WS_15 DEG_STRV	720	713	3	-0.8	-0.1	-1.2	0.3	-1.5
14	WS_15 DEG_STRV	720	714	-3	1.9	-0.1	1.2	-0.2	-16
15	WS_15 DEG_STRV	723	715	-5.5	-0.4	0	2.2	0	1.6
16	WS_15 DEG_STRV	723	716	5.2	-1.2	0.1	-2.2	0.8	6.1
17	WS_15 DEG_STRV	726	717	4.1	0.4	-0.2	-3.2	1.5	7.6
18	WS_15 DEG_STRV	726	718	-3.9	1	0	3.2	0.2	-12.3
19	WS_15 DEG_STRV	729	719	-1.5	0.3	0.2	4.9	-2.1	2.3
20	WS_15 DEG_STRV	729	720	1.4	-1.6	-0.1	-4.9	-0.2	12.7
21	WS_15 DEG_STRV	732	721	5.8	1.5	0.3	-10.5	-4.7	21.6
22	WS_15 DEG_STRV	732	722	-5.6	0.3	-0.4	10.5	-2.6	-7.6

Load (Row) Number	User's Load ID	Member ID	Joint ID	Fx (kips)	Fy (kips)	Fz (kips)	Mx (ft*kip)	My (ft*kip)	Mz (ft*kip)
1	WS_-15 DEG_STRV	702	701	0.2	-13.2	-0.5	-6.7	3.5	-179.4
2	WS_-15 DEG_STRV	702	702	-0.2	12.1	0.4	6.7	2.3	13.5
3	WS_-15 DEG_STRV	705	703	11	-2.4	0.1	37.3	-0.9	-37.8
4	WS_-15 DEG_STRV	705	704	-10.6	0	-0.2	-37.3	-3.3	3.8
5	WS_-15 DEG_STRV	708	705	-3.8	-2.1	-0.2	4.2	1.6	-38.1
6	WS_-15 DEG_STRV	708	706	3.9	1.2	0.1	-4.2	-0.2	20.2
7	WS_-15 DEG_STRV	711	707	8.9	-1.4	-0.1	9.5	0.3	-13.7
8	WS_-15 DEG_STRV	711	708	-8.6	-0.8	-0.1	-9.5	-0.9	5.4
9	WS_-15 DEG_STRV	714	709	-3.4	0.5	-0.2	-1.3	1.4	-8.1
10	WS_-15 DEG_STRV	714	710	3.4	-1.5	0.1	1.3	0.2	19.5
11	WS_-15 DEG_STRV	717	711	6.9	-1	-0.1	4.1	0.3	-5.3
12	WS_-15 DEG_STRV	717	712	-6.6	-0.9	-0.1	-4.1	-0.8	4.8
13	WS_-15 DEG_STRV	720	713	-3	-0.8	0.1	-1.2	-0.3	-1.5
14	WS_-15 DEG_STRV	720	714	2.9	1.9	0.1	1.2	0.3	-16
15	WS_-15 DEG_STRV	723	715	5.4	-0.4	0	2.2	0	1.6
16	WS_-15 DEG_STRV	723	716	-5.2	-1.2	-0.1	-2.2	-0.8	6.1
17	WS_-15 DEG_STRV	726	717	-4.1	0.4	0.2	-3.2	-1.5	7.6
18	WS_-15 DEG_STRV	726	718	3.9	1	0	3.2	-0.2	-12.3
19	WS_-15 DEG_STRV	729	719	1.5	0.3	-0.2	4.9	2.1	2.3
20	WS_-15 DEG_STRV	729	720	-1.4	-1.6	0.1	-4.9	0.2	12.7
21	WS_-15 DEG_STRV	732	721	-5.8	1.5	-0.2	-10.5	4.6	21.6
22	WS_-15 DEG_STRV	732	722	5.5	0.3	0.4	10.5	2.6	-7.6
1	WS_30 DEG_STRV	702	701	-0.4	-12.2	1.2	-6.1	-7.7	-165.1
2	WS_30 DEG_STRV	702	702	0.4	11.2	-0.8	6.1	-5	12
3	WS_30 DEG_STRV	705	703	-24.7	-2.2	-0.1	34.1	2	-34.9
4	WS_30 DEG_STRV	705	704	23.8	-0.1	0.5	-34.1	7.3	3.4
5	WS_30 DEG_STRV	708	705	8.5	-1.9	0.5	3.7	-3.7	-34.6
6	WS_30 DEG_STRV	708	706	-8.6	1.1	-0.1	-3.7	0.3	18
7	WS_30 DEG_STRV	711	707	-19.9	-1.3	0.2	8.5	-0.7	-12.6
8	WS_30 DEG_STRV	711	708	19.1	-0.8	0.2	-8.5	2	4.9
9	WS_30 DEG_STRV	714	709	7.6	0.4	0.5	-1.2	-3.3	-6.6
10	WS_30 DEG_STRV	714	710	-7.6	-1.4	-0.1	1.2	-0.5	17.3
11	WS_30 DEG_STRV	717	711	-15.3	-0.9	0.2	3.5	-0.8	-4.8
12	WS_30 DEG_STRV	717	712	14.7	-0.9	0.2	-3.5	1.7	4.4
13	WS_30 DEG_STRV	720	713	6.6	-0.7	-0.2	-0.9	0.7	-2.2
14	WS_30 DEG_STRV	720	714	-6.5	1.8	-0.2	0.9	-0.5	-14.3
15	WS_30 DEG_STRV	723	715	-12.1	-0.4	0.1	1.7	0	1.7
16	WS_30 DEG_STRV	723	716	11.6	-1.2	0.3	-1.7	1.9	5.6
17	WS_30 DEG_STRV	726	717	9.2	0.4	-0.4	-2.6	3.5	6.5
18	WS_30 DEG_STRV	726	718	-8.9	0.9	0	2.6	0.6	-11.1
19	WS_30 DEG_STRV	729	719	-3.5	0.3	0.5	4.2	-4.7	2.7
20	WS_30 DEG_STRV	729	720	3.1	-1.5	-0.1	-4.2	-0.4	11.4
21	WS_30 DEG_STRV	732	721	13.5	1.5	0.5	-9.4	-10.5	19.8
22	WS_30 DEG_STRV	732	722	-12.9	0.3	-0.9	9.4	-6	-7
1	WS_-30 DEG_STRV	702	701	0.4	-12.2	-1.2	-6.1	7.6	-165.1
2	WS_-30 DEG_STRV	702	702	-0.4	11.2	0.7	6.1	5	12.1
3	WS_-30 DEG_STRV	705	703	24.2	-2.2	0.1	34.1	-2	-34.9
4	WS_-30 DEG_STRV	705	704	-23.4	-0.1	-0.5	-34.1	-7.3	3.4
5	WS_-30 DEG_STRV	708	705	-8.4	-1.9	-0.5	3.7	3.6	-34.6
6	WS_-30 DEG_STRV	708	706	8.5	1.1	0.1	-3.7	-0.3	18
7	WS_-30 DEG_STRV	711	707	19.7	-1.3	-0.2	8.5	0.7	-12.6
8	WS_-30 DEG_STRV	711	708	-18.9	-0.8	-0.3	-8.5	-2	4.9
9	WS_-30 DEG_STRV	714	709	-7.6	0.4	-0.5	-1.2	3.2	-6.6
10	WS_-30 DEG_STRV	714	710	7.6	-1.4	0.1	1.2	0.5	17.3
11	WS_-30 DEG_STRV	717	711	15.2	-0.9	-0.2	3.5	0.8	-4.8
12	WS_-30 DEG_STRV	717	712	-14.6	-0.9	-0.2	-3.5	-1.7	4.4
13	WS_-30 DEG_STRV	720	713	-6.6	-0.7	0.2	-0.9	-0.7	-2.2
14	WS_-30 DEG_STRV	720	714	6.5	1.8	0.2	0.9	0.5	-14.3
15	WS_-30 DEG_STRV	723	715	12	-0.4	-0.1	1.7	0	1.7
16	WS_-30 DEG_STRV	723	716	-11.5	-1.2	-0.3	-1.7	-1.9	5.6
17	WS_-30 DEG_STRV	726	717	-9.2	0.4	0.4	-2.6	-3.5	6.5
18	WS_-30 DEG_STRV	726	718	8.9	0.9	0	2.6	-0.6	-11.1
19	WS_-30 DEG_STRV	729	719	3.5	0.3	-0.5	4.2	4.7	2.7
20	WS_-30 DEG_STRV	729	720	-3.2	-1.5	0.1	-4.2	0.4	11.4
21	WS_-30 DEG_STRV	732	721	-13.5	1.5	-0.5	-9.4	10.5	19.8
22	WS_-30 DEG_STRV	732	722	12.8	0.3	0.9	9.4	6	-7

Load (Row) Number	User's Load ID	Member ID	Joint ID	Fx (kips)	Fy (kips)	Fz (kips)	Mx (ft*kip)	My (ft*kip)	Mz (ft*kip)
1	WS_45 DEG_STRV	702	701	-0.5	-9.3	1.7	-4.9	-10.7	-126.6
2	WS_45 DEG_STRV	702	702	0.5	8.5	-1	4.9	-7	10.2
3	WS_45 DEG_STRV	705	703	-35	-1.6	-0.1	26.8	2.7	-26.6
4	WS_45 DEG_STRV	705	704	33.7	0	0.7	-26.8	10	3.1
5	WS_45 DEG_STRV	708	705	12.1	-1.4	0.7	3.2	-5.3	-28
6	WS_45 DEG_STRV	708	706	-12.2	0.8	-0.2	-3.2	0.1	15.5
7	WS_45 DEG_STRV	711	707	-28.3	-1	0.2	7.1	-1.1	-9.9
8	WS_45 DEG_STRV	711	708	27.2	-0.5	0.4	-7.1	2.9	4
9	WS_45 DEG_STRV	714	709	10.9	0.3	0.8	-0.9	-4.7	-7.6
10	WS_45 DEG_STRV	714	710	-10.9	-1	-0.2	0.9	-1	15
11	WS_45 DEG_STRV	717	711	-21.9	-0.7	0.2	3.4	-1.2	-4.3
12	WS_45 DEG_STRV	717	712	20.9	-0.6	0.4	-3.4	2.4	3.6
13	WS_45 DEG_STRV	720	713	9.6	-0.5	-0.3	-1.3	1.1	1
14	WS_45 DEG_STRV	720	714	-9.4	1.2	-0.3	1.3	-0.6	-12.1
15	WS_45 DEG_STRV	723	715	-17.5	-0.3	0.2	2.1	0	0.3
16	WS_45 DEG_STRV	723	716	16.7	-0.8	0.4	-2.1	2.7	4.5
17	WS_45 DEG_STRV	726	717	13.5	0.3	-0.7	-2.8	5.1	6.5
18	WS_45 DEG_STRV	726	718	-13	0.6	0.1	2.8	0.9	-9
19	WS_45 DEG_STRV	729	719	-5.1	0.2	0.8	4	-6.9	0.4
20	WS_45 DEG_STRV	729	720	4.6	-1	-0.2	-4	-0.6	9.2
21	WS_45 DEG_STRV	732	721	20.1	1.1	0.8	-7.8	-15.4	15.4
22	WS_45 DEG_STRV	732	722	-19.1	0.2	-1.4	7.8	-8.8	-5.6
1	WS_-45 DEG_STRV	702	701	0.5	-9.2	-1.7	-4.9	10.6	-126.6
2	WS_-45 DEG_STRV	702	702	-0.5	8.5	1	4.9	6.9	10.2
3	WS_-45 DEG_STRV	705	703	34.7	-1.6	0.1	26.8	-2.7	-26.6
4	WS_-45 DEG_STRV	705	704	-33.4	0	-0.7	-26.8	-10	3.2
5	WS_-45 DEG_STRV	708	705	-12	-1.4	-0.7	3.2	5.3	-28
6	WS_-45 DEG_STRV	708	706	12.2	0.8	0.2	-3.2	-0.1	15.5
7	WS_-45 DEG_STRV	711	707	28.2	-1	-0.2	7.1	1.1	-9.9
8	WS_-45 DEG_STRV	711	708	-27	-0.5	-0.4	-7.1	-2.8	4
9	WS_-45 DEG_STRV	714	709	-10.9	0.3	-0.8	-0.9	4.7	-7.6
10	WS_-45 DEG_STRV	714	710	10.9	-1	0.2	0.9	0.9	15
11	WS_-45 DEG_STRV	717	711	21.9	-0.7	-0.2	3.4	1.2	-4.3
12	WS_-45 DEG_STRV	717	712	-20.9	-0.6	-0.4	-3.4	-2.4	3.6
13	WS_-45 DEG_STRV	720	713	-9.6	-0.5	0.3	-1.3	-1.1	1
14	WS_-45 DEG_STRV	720	714	9.3	1.2	0.3	1.3	0.6	-12.1
15	WS_-45 DEG_STRV	723	715	17.4	-0.3	-0.2	2.1	0	0.3
16	WS_-45 DEG_STRV	723	716	-16.7	-0.8	-0.4	-2.1	-2.7	4.5
17	WS_-45 DEG_STRV	726	717	-13.5	0.3	0.7	-2.8	-5.1	6.5
18	WS_-45 DEG_STRV	726	718	13	0.6	-0.1	2.8	-0.9	-9
19	WS_-45 DEG_STRV	729	719	5.1	0.2	-0.8	4	6.9	0.4
20	WS_-45 DEG_STRV	729	720	-4.6	-1	0.2	-4	0.6	9.2
21	WS_-45 DEG_STRV	732	721	-20	1.1	-0.8	-7.8	15.4	15.5
22	WS_-45 DEG_STRV	732	722	19.1	0.2	1.4	7.8	8.8	-5.6
1	WS_60 DEG_STRV	702	701	-0.2	-1.7	0.6	-1	-4	-24.1
2	WS_60 DEG_STRV	702	702	0.2	1.6	-0.4	1	-2.6	2.4
3	WS_60 DEG_STRV	705	703	-13	-0.3	-0.1	5.4	1	-5
4	WS_60 DEG_STRV	705	704	12.5	0	0.3	-5.4	3.7	0.9
5	WS_60 DEG_STRV	708	705	4.5	-0.3	0.3	0.7	-2	-6
6	WS_60 DEG_STRV	708	706	-4.5	0.2	-0.1	-0.7	0	3.7
7	WS_60 DEG_STRV	711	707	-10.5	-0.2	0.1	1.6	-0.4	-2
8	WS_60 DEG_STRV	711	708	10.1	-0.1	0.1	-1.6	1.1	0.9
9	WS_60 DEG_STRV	714	709	4	0	0.3	-0.2	-1.8	-2.6
10	WS_60 DEG_STRV	714	710	-4	-0.1	-0.1	0.2	-0.4	3.6
11	WS_60 DEG_STRV	717	711	-8.1	-0.1	0.1	1	-0.4	-1.1
12	WS_60 DEG_STRV	717	712	7.8	-0.1	0.1	-1	0.9	0.8
13	WS_60 DEG_STRV	720	713	3.6	-0.1	-0.1	-0.5	0.4	1.3
14	WS_60 DEG_STRV	720	714	-3.5	0.2	-0.1	0.5	-0.2	-2.8
15	WS_60 DEG_STRV	723	715	-6.5	-0.1	0.1	0.8	0	-0.4
16	WS_60 DEG_STRV	723	716	6.2	-0.1	0.2	-0.8	1	0.9
17	WS_60 DEG_STRV	726	717	5	0.1	-0.2	-0.9	1.9	1.9
18	WS_60 DEG_STRV	726	718	-4.8	0.1	0	0.9	0.3	-1.9
19	WS_60 DEG_STRV	729	719	-1.9	0	0.3	1.1	-2.6	-0.7
20	WS_60 DEG_STRV	729	720	1.7	-0.2	-0.1	-1.1	-0.2	2
21	WS_60 DEG_STRV	732	721	7.4	0.2	0.3	-1.8	-5.7	3.1
22	WS_60 DEG_STRV	732	722	-7.1	0	-0.5	1.8	-3.3	-1.2

Load (Row) Number	User's Load ID	Member ID	Joint ID	Fx (kips)	Fy (kips)	Fz (kips)	Mx (ft*kip)	My (ft*kip)	Mz (ft*kip)
1	WS_-60 DEG_STRV	702	701	0.6	-5.6	-2	-3.3	12.9	-78.2
2	WS_-60 DEG_STRV	702	702	-0.6	5.2	1.2	3.3	8.4	7.6
3	WS_-60 DEG_STRV	705	703	42	-0.9	0.2	17.6	-3.3	-16.3
4	WS_-60 DEG_STRV	705	704	-40.5	0	-0.9	-17.6	-12	2.9
5	WS_-60 DEG_STRV	708	705	-14.5	-0.8	-0.9	2.4	6.4	-19.3
6	WS_-60 DEG_STRV	708	706	14.7	0.5	0.3	-2.4	-0.1	12
7	WS_-60 DEG_STRV	711	707	34.1	-0.5	-0.3	5.3	1.3	-6.5
8	WS_-60 DEG_STRV	711	708	-32.7	-0.3	-0.4	-5.3	-3.4	2.9
9	WS_-60 DEG_STRV	714	709	-13.1	0.1	-0.9	-0.6	5.7	-8.3
10	WS_-60 DEG_STRV	714	710	13.1	-0.5	0.2	0.6	1.1	11.7
11	WS_-60 DEG_STRV	717	711	26.4	-0.4	-0.3	3.2	1.4	-3.5
12	WS_-60 DEG_STRV	717	712	-25.2	-0.3	-0.4	-3.2	-2.9	2.6
13	WS_-60 DEG_STRV	720	713	-11.5	-0.2	0.4	-1.6	-1.3	4.3
14	WS_-60 DEG_STRV	720	714	11.3	0.6	0.3	1.6	0.8	-9
15	WS_-60 DEG_STRV	723	715	21	-0.2	-0.2	2.4	0	-1.4
16	WS_-60 DEG_STRV	723	716	-20.1	-0.4	-0.5	-2.4	-3.2	3.1
17	WS_-60 DEG_STRV	726	717	-16.3	0.2	0.8	-2.9	-6.2	6.1
18	WS_-60 DEG_STRV	726	718	15.6	0.3	-0.1	2.9	-1.1	-6.3
19	WS_-60 DEG_STRV	729	719	6.1	0	-0.9	3.6	8.3	-2.2
20	WS_-60 DEG_STRV	729	720	-5.5	-0.5	0.2	-3.6	0.8	6.4
21	WS_-60 DEG_STRV	732	721	-24.1	0.6	-1	-5.7	18.6	10
22	WS_-60 DEG_STRV	732	722	22.9	0.1	1.6	5.7	10.6	-3.8

PT Column: AASHTO LRFD Column Analysis
Figg Bridge Engineers, Inc.
Short Column Analysis - Individual Load Cases
File Name: M2 Diagonal_STR.ptc

Short Column Analysis - Individual Load Case Results

Load No.	Cross Section ID	Pu (kips)	Mux (ft*kip)	Muy (ft*kip)	Mu (ft*kip)	ϕMn (ft*kip)	ϕMn/Mu
1	M2 Diagonal6	3158.5	0.1	-414.1	414.1	1227.4	2.964
2	M2 Diagonal6	2648.3	0.1	-432.8	432.8	1571.8	3.632
3	M2 Diagonal6	2499.4	0.1	-327.0	327.0	1641.7	5.021
4	M2 Diagonal6	1384.4	-95.5	-249.1	266.8	1357.6	5.089
5	M2 Diagonal6	2974.2	0.1	-436.7	436.7	1376.6	3.152
6	M2 Diagonal6	2123.7	2.2	-362.8	362.8	1770.0	4.879
7	M2 Diagonal6	2974.2	0.1	-436.7	436.7	1376.6	3.152
8	M2 Diagonal6	1384.4	-95.5	-249.1	266.8	1357.6	5.089
9	M2 Diagonal6	2974.2	0.1	-436.7	436.7	1376.6	3.152
10	M2 Diagonal6	1320.4	-95.5	-240.0	258.3	1334.7	5.167
11	M2 Diagonal6	2033.4	-95.5	-353.8	366.5	1459.4	3.982
12	M2 Diagonal6	1999.3	0.1	-328.1	328.1	1794.9	5.471
13	M2 Diagonal6	2123.7	2.2	-362.8	362.8	1770.0	4.879
14	M2 Diagonal6	1664.2	-95.5	-215.5	235.7	1311.0	5.562
15	M2 Diagonal6	1384.4	-95.5	-249.1	266.8	1357.6	5.089
16	M2 Diagonal6	1855.0	-6.4	-221.8	221.9	1801.6	8.119
17	M2 Diagonal6	1999.3	0.1	-328.1	328.1	1794.9	5.471
18	M2 Diagonal6	1855.0	-6.4	-221.8	221.9	1801.6	8.119
19	M2 Diagonal6	1311.8	-8.1	-42.2	43.0	1597.7	37.181
20	M2 Diagonal6	2438.2	27.1	-65.2	70.6	1239.9	17.560
21	M2 Diagonal6	2636.5	0.0	-70.1	70.1	1577.7	22.506
22	M2 Diagonal6	2111.8	-0.2	-57.3	57.3	1773.9	30.957
23	M2 Diagonal6	1563.5	-7.1	-16.1	17.6	1312.1	74.570
24	M2 Diagonal6	2135.9	-13.3	-51.3	53.0	1447.3	27.309
25	M2 Diagonal6	2262.0	-8.1	-54.1	54.7	1567.3	28.651
26	M2 Diagonal6	1375.8	-8.1	-43.8	44.5	1590.0	35.696
27	M2 Diagonal6	2460.6	-7.1	-89.7	90.0	1600.5	17.787
28	M2 Diagonal6	3146.6	0.0	-65.0	65.0	1237.8	19.043
29	M2 Diagonal6	2154.5	-13.2	-58.2	59.7	1487.2	24.921
30	M2 Diagonal6	1854.3	-7.1	-68.6	69.0	1696.8	24.603
31	M2 Diagonal6	1375.8	-8.1	-43.8	44.5	1590.0	35.696
32	M2 Diagonal6	2460.6	-7.1	-89.7	90.0	1600.5	17.787
33	M2 Diagonal6	2438.2	27.1	-65.2	70.6	1239.9	17.560
34	M2 Diagonal6	1549.8	-1.2	-33.8	33.8	1848.9	54.668
35	M2 Diagonal6	1990.8	0.0	-68.2	68.2	1796.6	26.344
36	M2 Diagonal6	1563.5	-7.1	-16.1	17.6	1312.1	74.570

MIN C/D = 2.96

Section ID: M2 Diagonal6

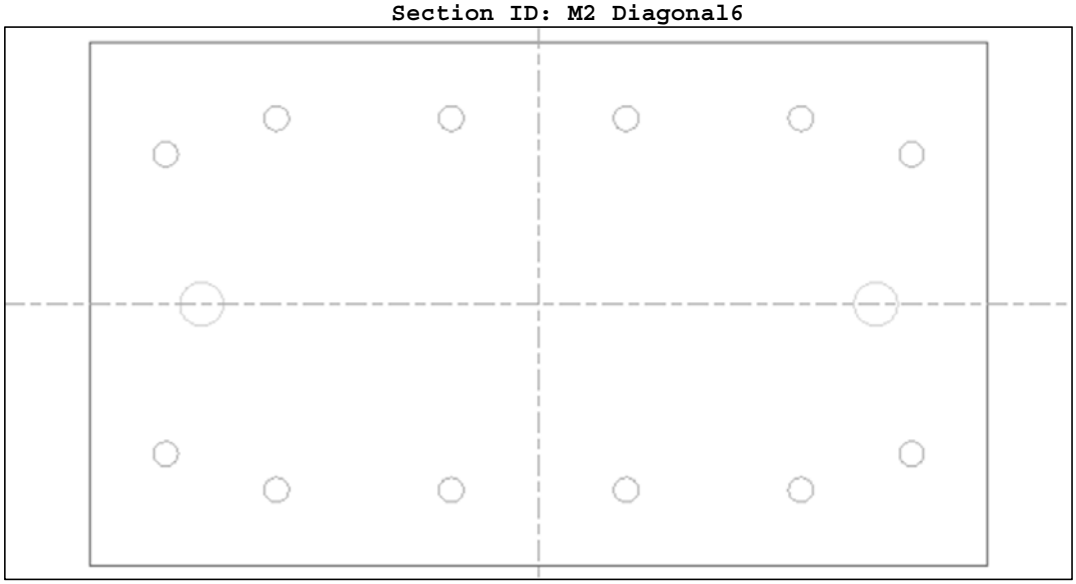

Material Properties

f'c (ksi)	= 8.5	Strain @ Ult.	= 0.003
f''c (ksi)	= 7.12	Strain @ Max.	= 0.0024
fy (ksi)	= 60	E Conc. (ksi)	= 4781
fr (ksi)	= 0.7	E Rebar (ksi)	= 29000
Tendon fpu (ksi)	= 270	E Tendon (ksi)	= 28500
PT Bar fpu (ksi)	= 150	E PT Bar (ksi)	= 29000
Gamma	= 0.15		

Section Properties

Ix (in^4)	= 27783	Iy (in^4)	= 81648
Y top (in)	= 10.5	X lft (in)	= 18
Y bot (in)	= 10.5	X rgt (in)	= 18
Area (in^2)	= 756	Ixy (in^4)	= 0

Cross Section Coordinates

** Exterior Boundary Coordinates **

Point No.	X (in)	Y (in)	Point No.	X (in)	Y (in)
1	-18	10.5	2	18	10.5
3	18	-10.5	4	-18	-10.5

Rebar Information

Bar No.	X (in)	Y (in)	Dia. (in)	Area (in^2)
1	-10.5	7.44	1	0.79
2	-3.5	7.44	1	0.79
3	3.5	7.44	1	0.79
4	10.5	7.44	1	0.79
5	-14.94	6	1	0.79
6	-10.5	-7.44	1	0.79
7	-3.5	-7.44	1	0.79
8	3.5	-7.44	1	0.79
9	10.5	-7.44	1	0.79
10	-14.94	-6	1	0.79
11	14.94	6	1	0.79
12	14.94	-6	1	0.79

PT Bar Information

PT Bar No.	X (in)	Y (in)	Dia. (in)	Area (in^2)	Fsi (ksi)
*1	-13.5	0	1.746	2.66	0
*2	13.5	0	1.746	2.66	0

*PT Bars destressed after main span has been placed in its final position.
Bars will remain in place.

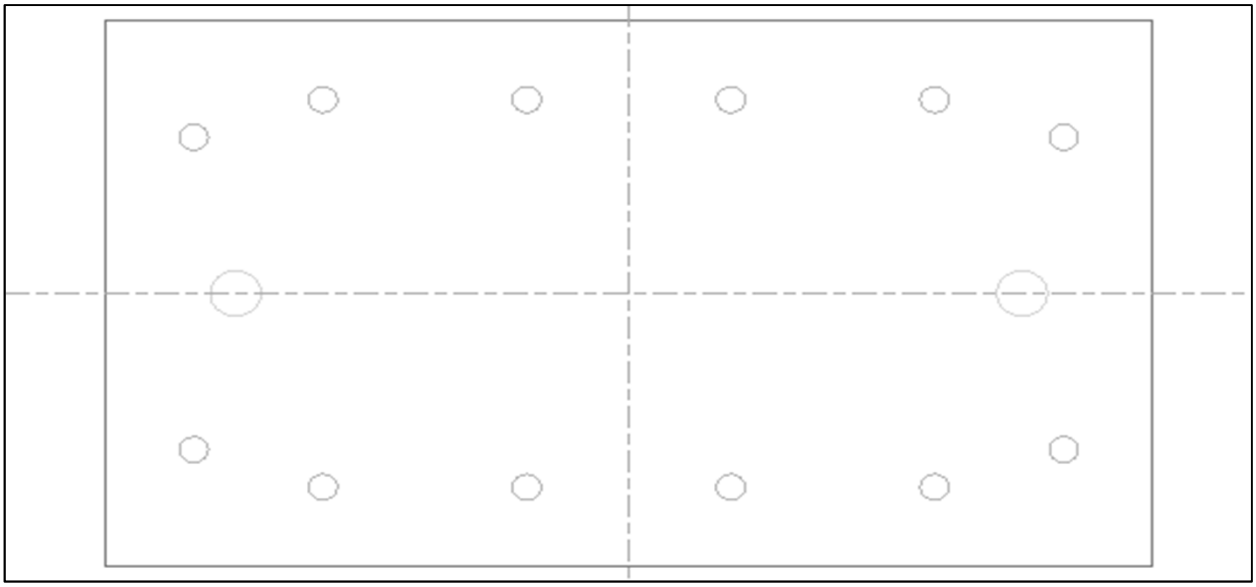

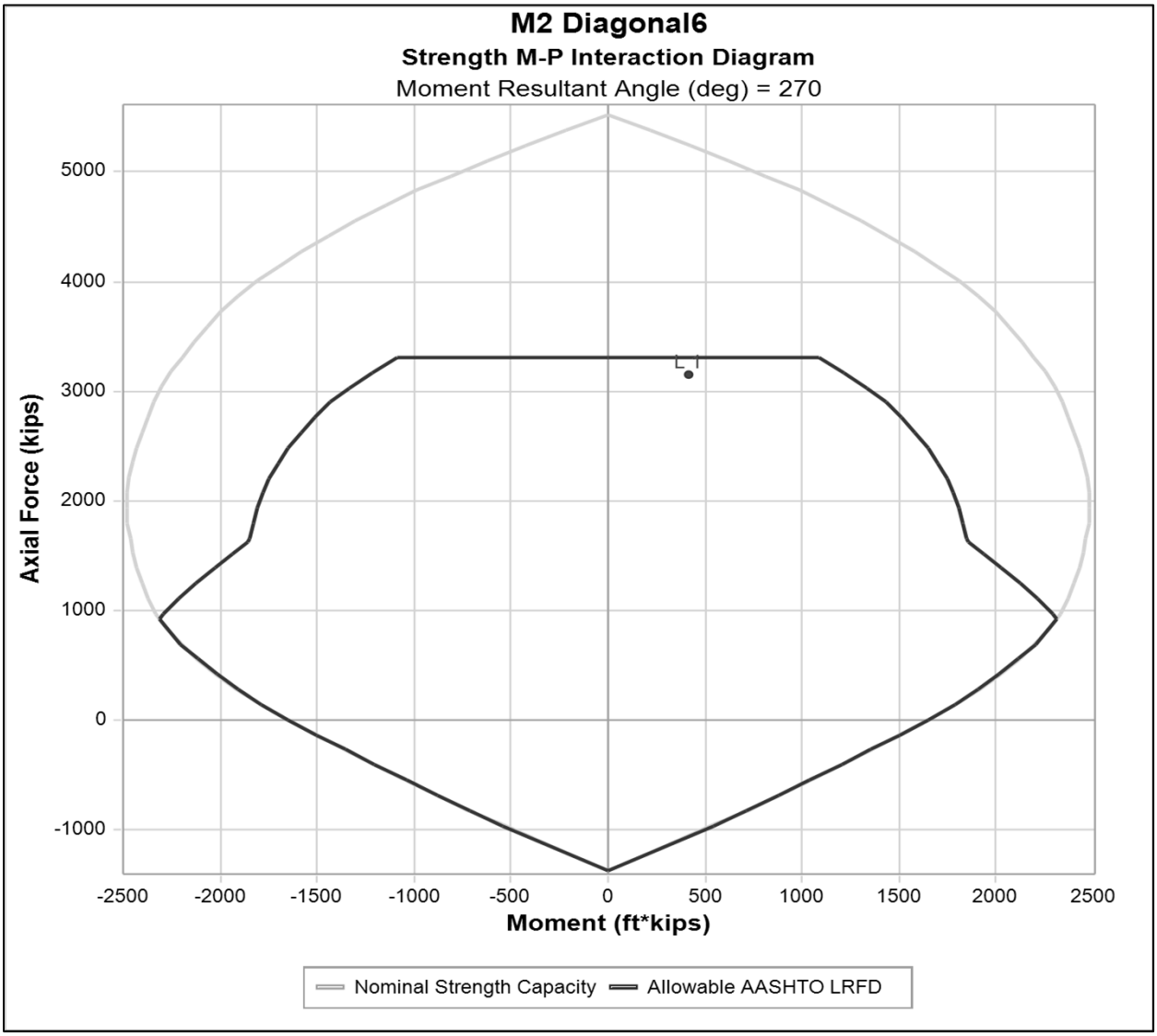
M2 Diagonal6
Strength M-P Interaction Diagram
Moment Resultant Angle (deg) = 270
Axial Force (kips)
5000
4000
3000
2000
1000
0
-1000
-2500
-2000
-1500
-1000
-500
0
500
1000
1500
2000
2500
Moment (ft*kips)
Nominal Strength Capacity
Allowable AASHTO LRFD

Material Properties

f'c (ksi)	= 8.5	Strain @ Ult.	= 0.003
f''c (ksi)	= 7.12	Strain @ Max.	= 0.0024
fy (ksi)	= 60	E Conc. (ksi)	= 4781
fr (ksi)	= 0.7	E Rebar (ksi)	= 29000
Tendon fpu (ksi)	= 270	E Tendon (ksi)	= 28500
PT Bar fpu (ksi)	= 150	E PT Bar (ksi)	= 29000
Gamma	= 0.15		

Section Properties

Ix (in^4)	= 27783	Iy (in^4)	= 81648
Y top (in)	= 10.5	X lft (in)	= 18
Y bot (in)	= 10.5	X rgt (in)	= 18
Area (in^2)	= 756	Ixy (in^4)	= 0

Cross Section Coordinates

** Exterior Boundary Coordinates **

Point No.	X (in)	Y (in)	Point No.	X (in)	Y (in)
1	-18	10.5	2	18	10.5
3	18	-10.5	4	-18	-10.5

Rebar Information

Bar No.	X (in)	Y (in)	Dia. (in)	Area (in^2)
1	-10.5	7.44	1	0.79
2	-3.5	7.44	1	0.79
3	3.5	7.44	1	0.79
4	10.5	7.44	1	0.79
5	-14.94	6	1	0.79
6	-10.5	-7.44	1	0.79
7	-3.5	-7.44	1	0.79
8	3.5	-7.44	1	0.79
9	10.5	-7.44	1	0.79
10	-14.94	-6	1	0.79
11	14.94	6	1	0.79
12	14.94	-6	1	0.79

PT Bar Information

PT Bar No.	X (in)	Y (in)	Dia. (in)	Area (in^2)	Fsi (ksi)
1	-13.5	0	1.746	2.66	0
2	13.5	0	1.746	2.66	0

Diagram Load Points

Load	Pu(kips)	Mux(ft*kip)	Muy(ft*kip)	Mu(ft*kip)	ϕMn(ft*kip)	ϕMn/ M
L 1	3158.5	0.1	-414.1	414.1	1227.4	2.964

PT Column: AASHTO LRFD Column Analysis
Figg Bridge Engineers, Inc.
Short Column Analysis - Individual Load Cases
File Name: M3 Diagonal_STR.ptc

Short Column Analysis - Individual Load Case Results

Load No.	Combo ID	Cross Section ID	Pu (kips)	Mux (ft*kip)	Muy (ft*kip)	Mu (ft*kip)	ϕMn (ft*kip)	ϕMn/Mu
1	STR 3/ 200	M3 Diagonal	-399.3	-97.8	-54.5	112.0	622.7	5.561
2	STR 1/ 7	M3 Diagonal	-788.0	74.6	-128.0	148.2	592.4	3.998
3	STR 1/ 165	M3 Diagonal	-419.1	0.0	-14.0	14.0	972.8	69.483
4	STR 3/ 10	M3 Diagonal	-643.0	-97.8	-88.3	131.8	580.8	4.408
5	STR 1/ 47	M3 Diagonal	-955.9	0.1	-242.9	242.9	701.3	2.887
6	STR 1/ 34	M3 Diagonal	-784.9	74.7	-167.8	183.7	624.9	3.402
7	STR 1/ 47	M3 Diagonal	-955.9	0.1	-242.9	242.9	701.3	2.887
8	STR 3/ 121	M3 Diagonal	-471.8	-108.8	-35.1	114.3	660.0	5.773
9	STR 1/ 47	M3 Diagonal	-955.9	0.1	-242.9	242.9	701.3	2.887
10	STR 1/ 20	M3 Diagonal	-959.0	0.0	-203.1	203.1	699.4	3.444
11	STR 3/ 1	M3 Diagonal	-685.0	-108.8	-101.7	148.9	573.4	3.850
12	STR 1/ 47	M3 Diagonal	-955.9	0.1	-242.9	242.9	701.3	2.887
13	STR 1/ 7	M3 Diagonal	-788.0	74.6	-128.0	148.2	592.4	3.998
14	STR 1/ 165	M3 Diagonal	-419.1	0.0	-14.0	14.0	972.8	69.483
15	STR 3/ 121	M3 Diagonal	-471.8	-108.8	-35.1	114.3	660.0	5.773
16	STR 1/ 165	M3 Diagonal	-419.1	0.0	-14.0	14.0	972.8	69.483
17	STR 1/ 55	M3 Diagonal	-678.0	0.0	-87.8	87.8	856.3	9.753
18	STR 1/ 165	M3 Diagonal	-419.1	0.0	-14.0	14.0	972.8	69.483
19	STR 1/ 20	M3 Diagonal	-965.9	0.0	85.6	85.6	695.2	8.122
20	STR 3/ 1	M3 Diagonal	-691.8	-43.8	15.3	46.4	631.4	13.610
21	STR 1/ 47	M3 Diagonal	-962.8	0.0	133.9	133.9	697.1	5.206
22	STR 1/ 7	M3 Diagonal	-794.9	11.9	32.4	34.5	647.5	18.759
23	STR 1/ 47	M3 Diagonal	-962.8	0.0	133.9	133.9	697.1	5.206
24	STR 3/ 10	M3 Diagonal	-649.8	-68.3	9.8	69.0	712.7	10.329
25	STR 1/ 47	M3 Diagonal	-962.8	0.0	133.9	133.9	697.1	5.206
26	STR 3/ 10	M3 Diagonal	-649.8	-68.3	9.8	69.0	712.7	10.329
27	STR 1/ 47	M3 Diagonal	-962.8	0.0	133.9	133.9	697.1	5.206
28	STR 3/ 200	M3 Diagonal	-404.3	-68.3	17.2	70.4	684.1	9.713
29	STR 1/ 7	M3 Diagonal	-794.9	11.9	32.4	34.5	647.5	18.759
30	STR 1/ 165	M3 Diagonal	-424.0	0.0	-35.8	35.8	973.1	27.181
31	STR 3/ 10	M3 Diagonal	-649.8	-68.3	9.8	69.0	712.7	10.329
32	STR 1/ 165	M3 Diagonal	-424.0	0.0	-35.8	35.8	973.1	27.181
33	STR 1/ 8	M3 Diagonal	-807.7	12.3	37.5	39.5	674.5	17.091
35	STR 1/ 1	M3 Diagonal	-898.0	0.0	49.6	49.6	735.7	14.832

MIN C/D = 2.89

Section ID: M3 Diagonal

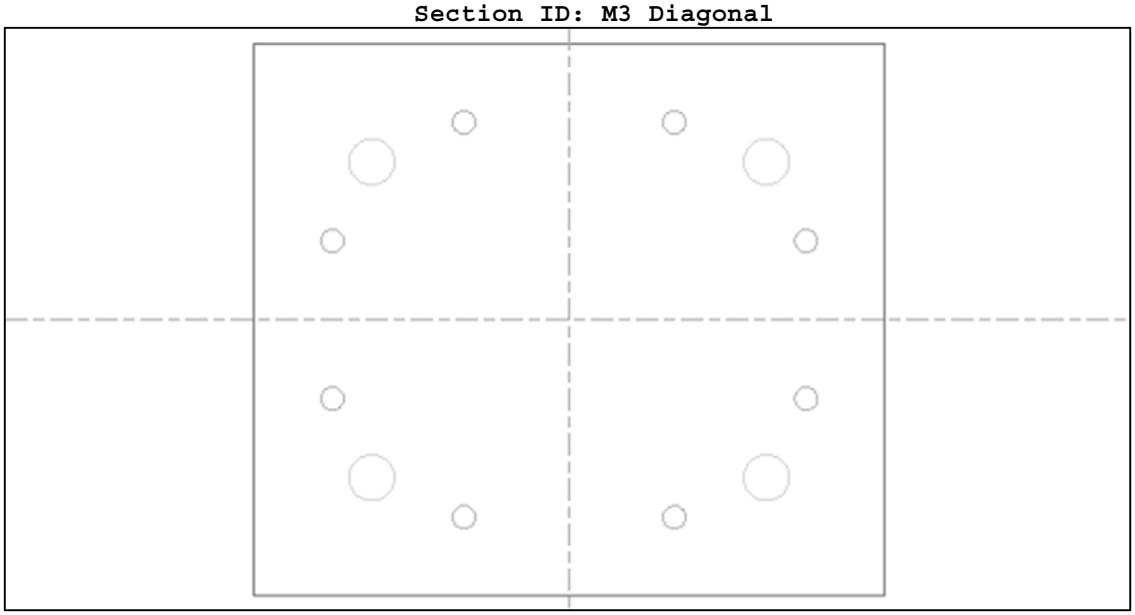

Material Properties

f'c (ksi)	8.5	Strain @ Ult.	0.003
f''c (ksi)	7.12	Strain @ Max.	0.0024
fy (ksi)	60	E Conc. (ksi)	4781
fr (ksi)	0.7	E Rebar (ksi)	29000
Tendon fpu (ksi)	270	E Tendon (ksi)	28500
PT Bar fpu (ksi)	150	E PT Bar (ksi)	29000
Gamma	0.15		

Section Properties

Ix (in^4)	18522	Iy (in^4)	24192
Y top (in)	10.5	X lft (in)	12
Y bot (in)	10.5	X rgt (in)	12
Area (in^2)	504	Ixy (in^4)	0

Cross Section Coordinates

** Exterior Boundary Coordinates **

Point No.	X (in)	Y (in)	Point No.	X (in)	Y (in)
1	-12	10.5	2	12	10.5
3	12	-10.5	4	-12	-10.5

Rebar Information

Bar No.	X (in)	Y (in)	Dia. (in)	Area (in^2)
1	-4	7.5	0.875	0.6
2	4	7.5	0.875	0.6
3	-9	3	0.875	0.6
4	-9	-3	0.875	0.6
5	-4	-7.5	0.875	0.6
6	4	-7.5	0.875	0.6
7	9	-3	0.875	0.6
8	9	3	0.875	0.6

PT Bar Information

PT Bar No.	X (in)	Y (in)	Dia. (in)	Area (in^2)	Fsi (ksi)
1	-7.5	6	1.746	2.66	105
2	7.5	6	1.746	2.66	105
3	7.5	-6	1.746	2.66	105
4	-7.5	-6	1.746	2.66	105

PT Column: AASHTO LRFD Column Analysis
Figg Bridge Engineers, Inc.
Short Column Analysis - Individual Load Cases
File Name: M5 Diagonal_STR.ptc

Short Column Analysis - Individual Load Case Results

Load No.	Combo ID	Cross Section ID	Pu (kips)	Mux (ft*kip)	Muy (ft*kip)	Mu (ft*kip)	ϕMn (ft*kip)	ϕMn/Mu
1	STR 3/ 195	M5 Diagonal	-57.6	-34.1	92.0	98.1	529.7	5.399
2	STR 1/ 7	M5 Diagonal	-241.8	194.2	51.4	200.9	370.9	1.846
3	STR 5/ 763	M5 Diagonal	-73.5	-3.1	93.3	93.4	548.5	5.876
4	STR 3/ 10	M5 Diagonal	-185.1	-13.3	46.4	48.3	460.7	9.544
5	STR 3/ 109	M5 Diagonal	-212.9	-34.1	28.9	44.7	401.3	8.978
6	STR 1/ 7	M5 Diagonal	-241.8	194.2	51.4	200.9	370.9	1.846
7	STR 1/ 84	M5 Diagonal	-74.2	-0.1	93.5	93.5	548.3	5.864
8	STR 1/ 7	M5 Diagonal	-241.8	194.2	51.4	200.9	370.9	1.846
9	STR 1/ 88	M5 Diagonal	-134.6	194.2	87.2	212.9	428.5	2.013
10	STR 1/ 11	M5 Diagonal	-310.1	-0.1	37.2	37.2	386.3	10.385
11	STR 3/ 1	M5 Diagonal	-197.6	-78.4	48.4	92.1	403.4	4.378
12	STR 3/ 109	M5 Diagonal	-212.9	-34.1	28.9	44.7	401.3	8.978
13	STR 3/ 2	M5 Diagonal	-191.7	-72.1	50.6	88.1	409.1	4.645
14	STR 1/ 84	M5 Diagonal	-74.2	-0.1	93.5	93.5	548.3	5.864
15	STR 3/ 1	M5 Diagonal	-197.6	-78.4	48.4	92.1	403.4	4.378
16	STR 3/ 109	M5 Diagonal	-212.9	-34.1	28.9	44.7	401.3	8.978
17	STR 1/ 1	M5 Diagonal	-285.9	-0.1	54.3	54.3	404.3	7.446
18	STR 5/ 1210	M5 Diagonal	-277.8	-3.4	32.6	32.8	405.8	12.381
19	STR 1/ 11	M5 Diagonal	-317.9	0.0	6.4	6.4	380.5	59.450
20	STR 3/ 1	M5 Diagonal	-205.3	-41.6	-4.7	41.9	396.5	9.470
21	STR 1/ 128	M5 Diagonal	-304.1	0.0	10.0	10.0	390.8	39.082
22	STR 3/ 2	M5 Diagonal	-199.4	-40.7	-4.6	41.0	399.8	9.760
23	STR 1/ 128	M5 Diagonal	-304.1	0.0	10.0	10.0	390.8	39.082
24	STR 3/ 10	M5 Diagonal	-192.8	-71.1	-3.9	71.2	406.5	5.709
25	STR 1/ 84	M5 Diagonal	-79.8	0.0	-57.3	57.3	544.8	9.508
26	STR 3/ 10	M5 Diagonal	-192.8	-71.1	-3.9	71.2	406.5	5.709
27	STR 3/ 140	M5 Diagonal	-83.4	-71.1	-48.4	86.0	447.9	5.208
28	STR 3/ 195	M5 Diagonal	-63.2	-22.4	-48.7	53.6	505.8	9.435
29	STR 1/ 7	M5 Diagonal	-249.6	9.5	-7.3	12.0	378.0	31.552
30	STR 1/ 84	M5 Diagonal	-79.8	0.0	-57.3	57.3	544.8	9.508
31	STR 3/ 10	M5 Diagonal	-192.8	-71.1	-3.9	71.2	406.5	5.709
32	STR 1/ 84	M5 Diagonal	-79.8	0.0	-57.3	57.3	544.8	9.508
33	STR 1/ 8	M5 Diagonal	-257.6	10.7	-3.3	11.2	361.3	32.269
34	STR 5/ 447	M5 Diagonal	-184.6	-1.4	0.0	1.4	413.3	295.197
35	STR 1/ 1	M5 Diagonal	-293.7	0.0	-9.9	9.9	398.6	40.258
36	STR 1/ 146	M5 Diagonal	-283.7	0.0	-0.1	0.1	-	**Infnty**

MIN C/D = 1.85

Section ID: M5 Diagonal

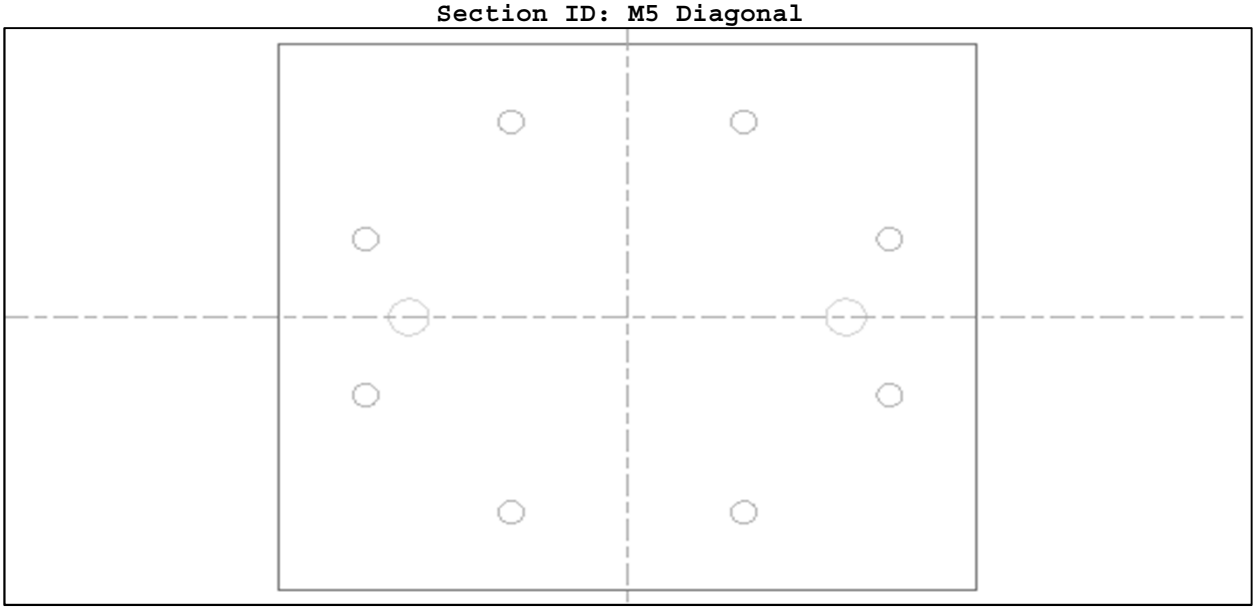

Material Properties

f'c (ksi)	8.5	Strain @ Ult.	0.003
f''c (ksi)	7.12	Strain @ Max.	0.0024
fy (ksi)	60	E Conc. (ksi)	4781
fr (ksi)	0.7	E Rebar (ksi)	29000
Tendon fpu (ksi)	270	E Tendon (ksi)	28500
PT Bar fpu (ksi)	150	E PT Bar (ksi)	29000
Gamma	0.15		

Section Properties

Ix (in^4)	18522	Iy (in^4)	24192
Y top (in)	10.5	X lft (in)	12
Y bot (in)	10.5	X rgt (in)	12
Area (in^2)	504	Ixy (in^4)	0

Cross Section Coordinates

** Exterior Boundary Coordinates **

Point No.	X (in)	Y (in)	Point No.	X (in)	Y (in)
1	-12	10.5	2	12	10.5
3	12	-10.5	4	-12	-10.5

Rebar Information

Bar No.	X (in)	Y (in)	Dia. (in)	Area (in^2)
1	-4	7.5	0.875	0.6
2	4	7.5	0.875	0.6
3	-4	-7.5	0.875	0.6
4	4	-7.5	0.875	0.6
5	-9	3	0.875	0.6
6	-9	-3	0.875	0.6
7	9	-3	0.875	0.6
8	9	3	0.875	0.6

PT Bar Information

PT Bar No.	X (in)	Y (in)	Dia. (in)	Area (in^2)	Fsi (ksi)
1	7.5	0	1.375	1.58	105
2	-7.5	0	1.375	1.58	105

PT Column: AASHTO LRFD Column Analysis
Figg Bridge Engineers, Inc.
Short Column Analysis - Individual Load Cases
File Name: M7 Diagonal_STR.ptc

Short Column Analysis - Individual Load Case Results

Load No.	Combo ID	Cross Section ID	Pu (kips)	Mux (ft*kip)	Muy (ft*kip)	Mu (ft*kip)	ϕMn (ft*kip)	ϕMn/Mu
1	STR 3/ 55	M7 Diagonal	311.8	26.8	-201.0	202.8	649.4	3.202
2	STR 3/ 1	M7 Diagonal	230.9	58.4	-189.9	198.7	565.1	2.845
3	STR 3/ 190	M7 Diagonal	183.8	-19.0	-153.5	154.7	626.3	4.049
4	STR 1/ 7	M7 Diagonal	237.2	-206.9	-209.3	294.3	475.4	1.615
5	STR 1/ 46	M7 Diagonal	306.5	0.1	-237.5	237.5	698.7	2.942
6	STR 3/ 11	M7 Diagonal	264.2	58.5	-196.1	204.6	572.5	2.798
7	STR 1/ 46	M7 Diagonal	306.5	0.1	-237.5	237.5	698.7	2.942
8	STR 1/ 7	M7 Diagonal	237.2	-206.9	-209.3	294.3	475.4	1.615
9	STR 1/ 52	M7 Diagonal	300.2	-206.8	-218.2	300.6	483.5	1.608
10	STR 3/ 189	M7 Diagonal	181.0	26.7	-161.6	163.8	618.3	3.775
11	STR 1/ 7	M7 Diagonal	237.2	-206.9	-209.3	294.3	475.4	1.615
12	STR 1/ 46	M7 Diagonal	306.5	0.1	-237.5	237.5	698.7	2.942
13	STR 3/ 1	M7 Diagonal	230.9	58.4	-189.9	198.7	565.1	2.845
14	STR 3/ 190	M7 Diagonal	183.8	-19.0	-153.5	154.7	626.3	4.049
15	STR 1/ 7	M7 Diagonal	237.2	-206.9	-209.3	294.3	475.4	1.615
16	STR 3/ 190	M7 Diagonal	183.8	-19.0	-153.5	154.7	626.3	4.049
17	STR 1/ 1	M7 Diagonal	243.5	0.0	-228.6	228.6	669.4	2.928
18	STR 3/ 190	M7 Diagonal	183.8	-19.0	-153.5	154.7	626.3	4.049
19	STR 3/ 189	M7 Diagonal	175.6	15.8	148.3	149.1	624.7	4.189
20	STR 1/ 7	M7 Diagonal	229.0	17.5	183.6	184.4	652.6	3.538
21	STR 1/ 46	M7 Diagonal	298.2	0.0	206.6	206.6	694.9	3.364
22	STR 3/ 1	M7 Diagonal	222.7	29.3	165.7	168.3	619.7	3.683
23	STR 1/ 46	M7 Diagonal	298.2	0.0	206.6	206.6	694.9	3.364
24	STR 1/ 1	M7 Diagonal	235.3	0.0	201.2	201.2	665.5	3.308
25	STR 1/ 46	M7 Diagonal	298.2	0.0	206.6	206.6	694.9	3.364
26	STR 3/ 10	M7 Diagonal	207.6	69.7	156.5	171.3	525.5	3.067
27	STR 1/ 46	M7 Diagonal	298.2	0.0	206.6	206.6	694.9	3.364
28	STR 3/ 55	M7 Diagonal	303.0	15.8	168.6	169.3	674.2	3.982
29	STR 3/ 1	M7 Diagonal	222.7	29.3	165.7	168.3	619.7	3.683
30	STR 3/ 190	M7 Diagonal	177.8	69.7	136.5	153.3	507.0	3.308
31	STR 1/ 7	M7 Diagonal	229.0	17.5	183.6	184.4	652.6	3.538
32	STR 3/ 210	M7 Diagonal	192.7	69.7	136.2	153.0	509.4	3.330
33	STR 3/ 10	M7 Diagonal	207.6	69.7	156.5	171.3	525.5	3.067
34	STR 3/ 210	M7 Diagonal	192.7	69.7	136.2	153.0	509.4	3.330
35	STR 1/ 1	M7 Diagonal	235.3	0.0	201.2	201.2	665.5	3.308
36	STR 3/ 205	M7 Diagonal	225.2	15.8	142.9	143.8	648.6	4.511

MIN C/D = 1.61

Section ID: M7 Diagonal

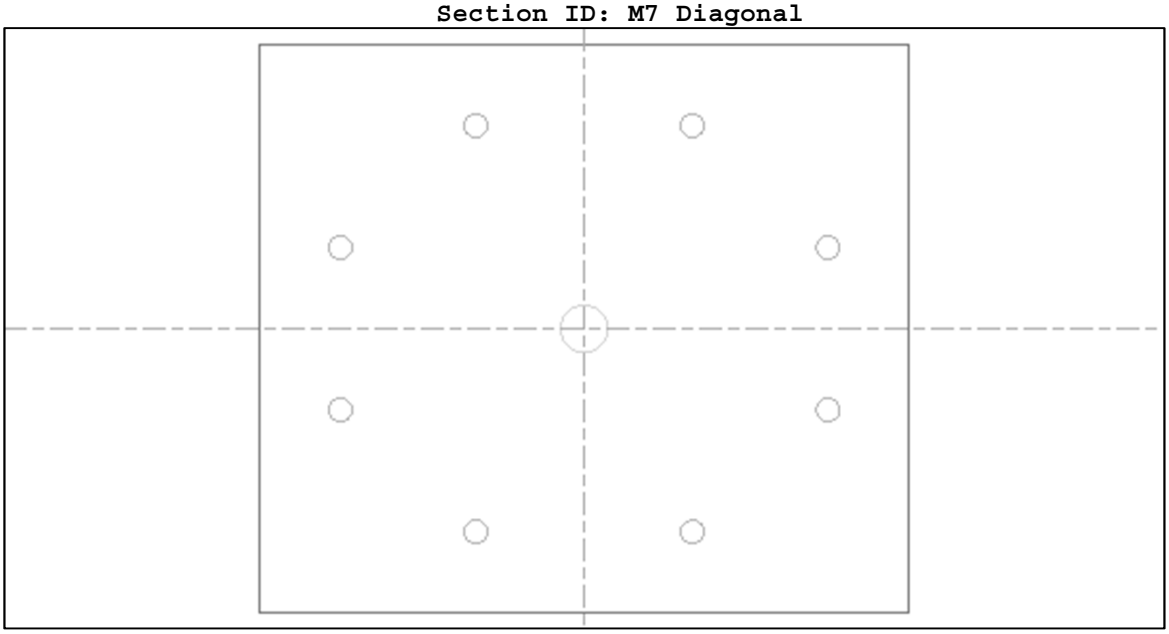

Material Properties

f'c (ksi)	8.5	Strain @ Ult.	0.003
f''c (ksi)	7.12	Strain @ Max.	0.0024
fy (ksi)	60	E Conc. (ksi)	4781
fr (ksi)	0.7	E Rebar (ksi)	29000
Tendon fpu (ksi)	270	E Tendon (ksi)	28500
PT Bar fpu (ksi)	150	E PT Bar (ksi)	29000
Gamma	0.15		

Section Properties

Ix (in^4)	18522	Iy (in^4)	24192
Y top (in)	10.5	X lft (in)	12
Y bot (in)	10.5	X rgt (in)	12
Area (in^2)	504	Ixy (in^4)	0

Cross Section Coordinates

** Exterior Boundary Coordinates **

Point No.	X (in)	Y (in)	Point No.	X (in)	Y (in)
1	-12	10.5	2	12	10.5
3	12	-10.5	4	-12	-10.5

Rebar Information

Bar No.	X (in)	Y (in)	Dia. (in)	Area (in^2)
1	-4	7.5	0.875	0.6
2	4	7.5	0.875	0.6
3	-9	3	0.875	0.6
4	-9	-3	0.875	0.6
5	-4	-7.5	0.875	0.6
6	4	-7.5	0.875	0.6
7	9	-3	0.875	0.6
8	9	3	0.875	0.6

PT Bar Information

PT Bar No.	X (in)	Y (in)	Dia. (in)	Area (in^2)	Fsi (ksi)
1	0	0	1.746	2.66	105

VI. TRANSVERSE DESIGN

- DECK & CANOPY

Deck Transverse Design

Selfweight		**Curb & Fence**		
A_{deck} (ft^2)	21.25	DC (kip/ft)	0.125	(See Fence Calculations)
L to centroid (ft)	6.41	L to centroid (ft)	14.54	
γ_c (k/ft^3)	0.15	M_{DC} (kip*ft/ft)	**1.82**	
SW (kip/ft)	3.19			
M_{SW} (kip*ft/ft)	**20.42**			
Overlay		**Live Load**		
DW (ksf)	0.00625	LL (ksf)	0.090	
L (ft)	14.125	L (ft)	14.125	
M_{DW} (kip*ft/ft)	**0.62**	M_{LL}(kip*ft/ft)	**8.98**	
Design Moment				
M_{SRV} (kip*ft/ft)	**31.84**			
Properties of Critical Section				
depth (ft)	2.03			
A (ft^2/ft))	2.03			
I (ft^4)	0.698			
c (ft)	1.02			
Transverse PT				
No. strands	4			
Area of strand (in^2)	0.217			
f_u (ksi)	270			
Loss Ratio	0.67	(From LARSA Model @ EOC)		
Space b/t tendons	2.833			
P_{PT} (kip/ft)	55.42			
Dist. to PT centroid from top (ft)	0.34			
e (ft)	0.689	(Accounting for 0.2" between C.O.G. of tendong group and C.O.G. of duct)		

Calculating Stresses

f'c (psi)	8500	
Allow. tension (ksf)	**39.8**	(3*sqrt(f'c))
Allow. compression (ksf)	**-734.4**	(0.6*f'c)

(-) compression

SECTION	σ_{PT_AXIAL} (ksf)	$\sigma_{PT\_BENDING}$ (ksf)	σ_{DC+DW} (ksf)	σ_{LL} (ksf)	σ_{TOTAL} (ksf)	Tension Check	Compression Check
TOP	-27.28	-55.49	33.24	13.06	**-36.47**	OK	OK
BOTTOM	-27.28	55.49	-33.24	-13.06	**-18.09**	OK	OK

Check stresses between nodal zones where deck is not attached to a truss member

SECTION	σ_{PT_AXIAL} (ksf)	$\sigma_{PT\_BENDING}$ (ksf)	*σ_{DC+LL} (ksf)	σ_{TOTAL} (ksf)	Tension Check	Compression Check
TOP	-27.28	-55.49	72.00	**-10.77**	OK	OK
BOTTOM	-27.28	55.49	-16.50	**11.71**	OK	OK

*Maximum tension stress on top of deck due to dead load and live load from finite element model results.
Minimum compression stress on the bottom of the deck due to dead and live load from finite element model results.

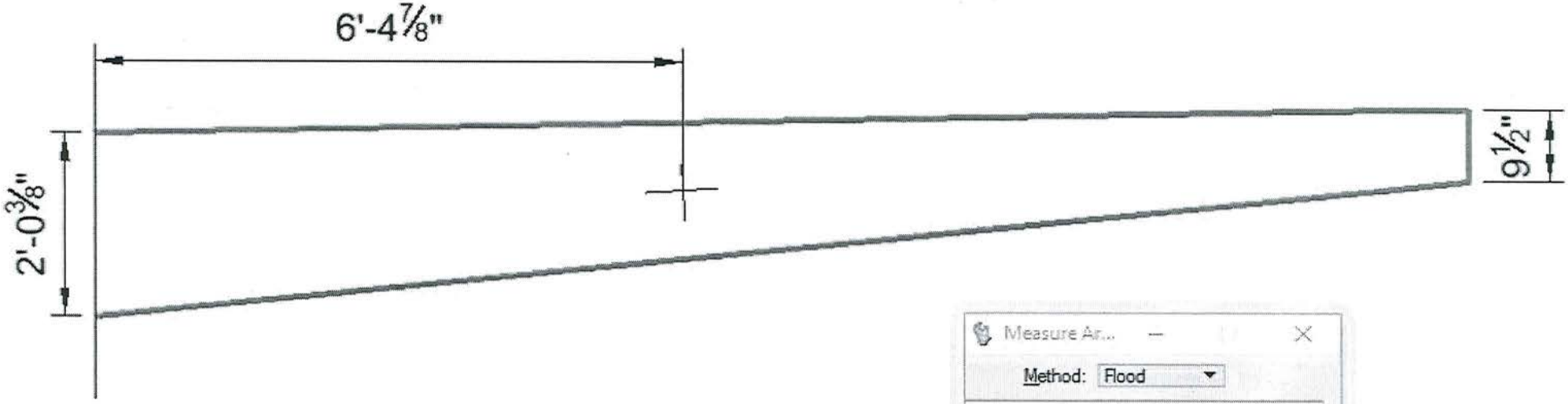
6'-4 7/8"
2'-0 3/8"
9 1/2"

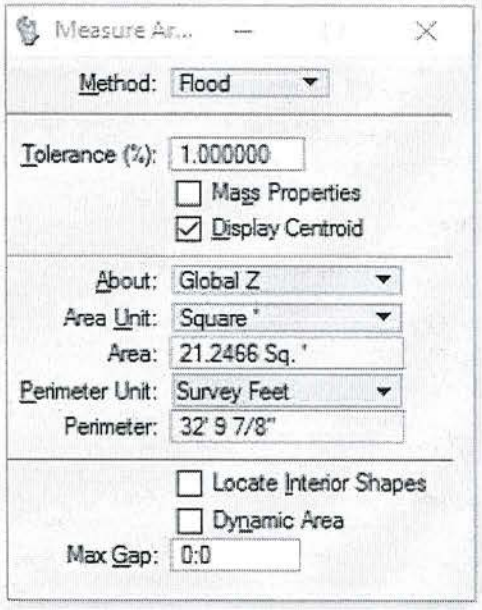
Measure Ar...
Method: Flood
Tolerance (%): 1.000000
Mass Properties
Display Centroid
About: Global Z
Area Unit: Square '
Area: 21.2466 Sq. '
Perimeter Unit: Survey Feet
Perimeter: 32' 9 7/8"
Locate Interior Shapes
Dynamic Area
Max Gap: 0:0

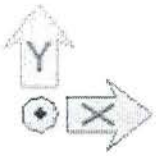
Y
X

VSL Bonded Slab Post-Tensioning is used for all types of slabs in buildings, bridge decks and similar applications.

VSL Bonded Slab Post-Tensioning Tendons consist of up to five strands of 0.5" (12.7 mm) or four strands of 0.6" (15.2 mm) diameter, placed in flat ducts, with corresponding anchorages. The strands are stressed and locked-off individually. Placing and grouting procedures are similar to those for the VSL Multistrand System. Corrugated or smooth steel ducts as well as corrugated PT-PLUS™ plastic ducts are available.

Post-tensioning enables slab deflections and cracks under service conditions to be kept under control. This permits larger spans and thinner slabs to be used. The reduced materials and labor result in lower costs and faster construction. Additionally, there can be indirect savings on foundations, columns, walls and vertical services.

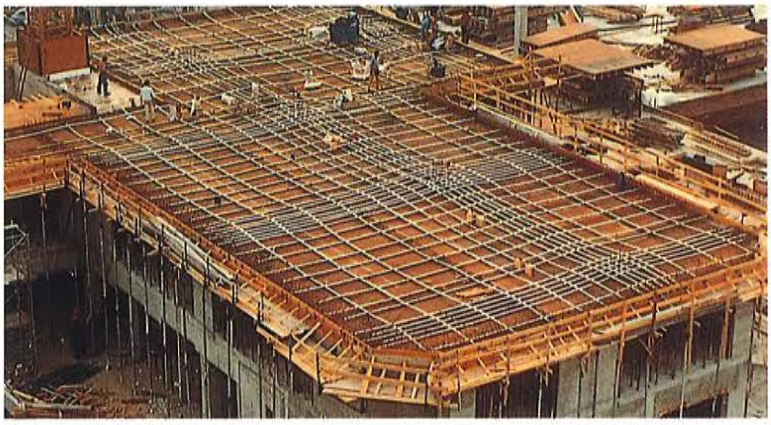

Dimension of Ducts

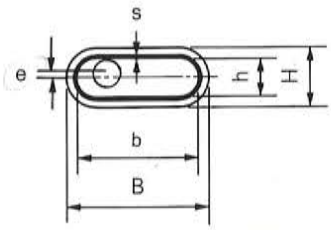

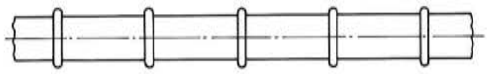

Duct type	h	H	b	B	s	e[1]	
Steel duct	0.75	0.83	2.75	2.83	0.018	0.10	Inches
Plastic duct (PT-PLUS™)	0.83	1.38	2.83	3.39	0.079	0.16	
Steel duct	19	21	70	72	0.46	3	Millimeters
Plastic duct (PT-PLUS™)	21	35	72	86	2	4	

Additional sizes available on request

Subject to modification

1) For 0.5" (12.7 mm) strand.

1258

Deck Transverse Design

NOTE: This analysis considers that compression would not be developed at the full depth of deck due to the opening for the drain pipe. The depth of the critical section considered in this analysis is taken at the center line of the deck.

Selfweight		**Curb & Fence**		
A_{deck} (ft^2)	22.84	DC (kip/ft)	0.125	(See Fence Calculations)
L to centroid (ft)	6.80	L to centroid (ft)	15.42	
γ_c (k/ft^3)	0.15	M_{DC} (kip*ft/ft)	**1.93**	
SW (kip/ft)	3.43			
M_{SW} (kip*ft/ft)	**23.30**			
Overlay		**Live Load**		
DW (ksf)	0.00625	LL (ksf)	0.090	
L (ft)	15	L (ft)	15	
M_{DW} (kip*ft/ft)	**0.70**	M_{LL}(kip*ft/ft)	**10.13**	

Design Moment	
M_{SRV} (kip*ft/ft)	**36.06**

Properties of Critical Section	
depth (ft)	1.54
A (ft^2/ft))	1.54
I (ft^4)	0.305
c (ft)	0.771

Transverse PT		
No. strands	4	
Area of strand (in^2)	0.217	
f_u (ksi)	270	
Loss Ratio	0.67	(From LARSA Model @ EOC)
Space b/t tendons	2.833	
P_{PT} (kip/ft)	55.42	
Dist. to PT centroid from top (ft)	0.36	
e (ft)	0.423	(Accounting for 0.2" between C.O.G. of tendong group and C.O.G. of duct)

Calculating Stresses

f'c (psi)	8500	
Allow. tension (ksf)	**39.83**	(3*sqrt(f'c))
Allow. compression (ksf)	**-734.4**	(0.6*f'c)

(-) compression

SECTION	σ_{PT_AXIAL} (ksf)	$\sigma_{PT\_BENDING}$ (ksf)	σ_{DC+DW} (ksf)	σ_{LL} (ksf)	σ_{TOTAL} (ksf)	Tension Check	Compression Check
TOP	-35.95	-59.17	65.47	25.56	**-4.09**	OK	OK
BOTTOM	-35.95	59.17	-65.47	-25.56	**-67.81**	OK	OK

Check stresses between nodal zones where deck is not attached to a truss member

SECTION	σ_{PT_AXIAL} (ksf)	$\sigma_{PT\_BENDING}$ (ksf)	*σ_{DC+LL} (ksf)	σ_{TOTAL} (ksf)	Tension Check	Compression Check
TOP	-35.95	-59.17	72.00	**-23.12**	OK	OK
BOTTOM	-35.95	59.17	-16.50	**6.72**	OK	OK

*Maximum tension stress on top of deck due to dead load and live load from finite element model results.
Maximum compression stress on the bottom of the deck due to dead and live load from finite element model results.

Combination 1_DL+2_LL
Entity: Stress - Solids
Component: SX (Units: kip/ft²)

-205.7
-164.5
-123.4
-82.3
-41.1
0.0
41.1
82.3
123.4

Maximum 149.8 at node 1325
Minimum -220.4 at node 4992

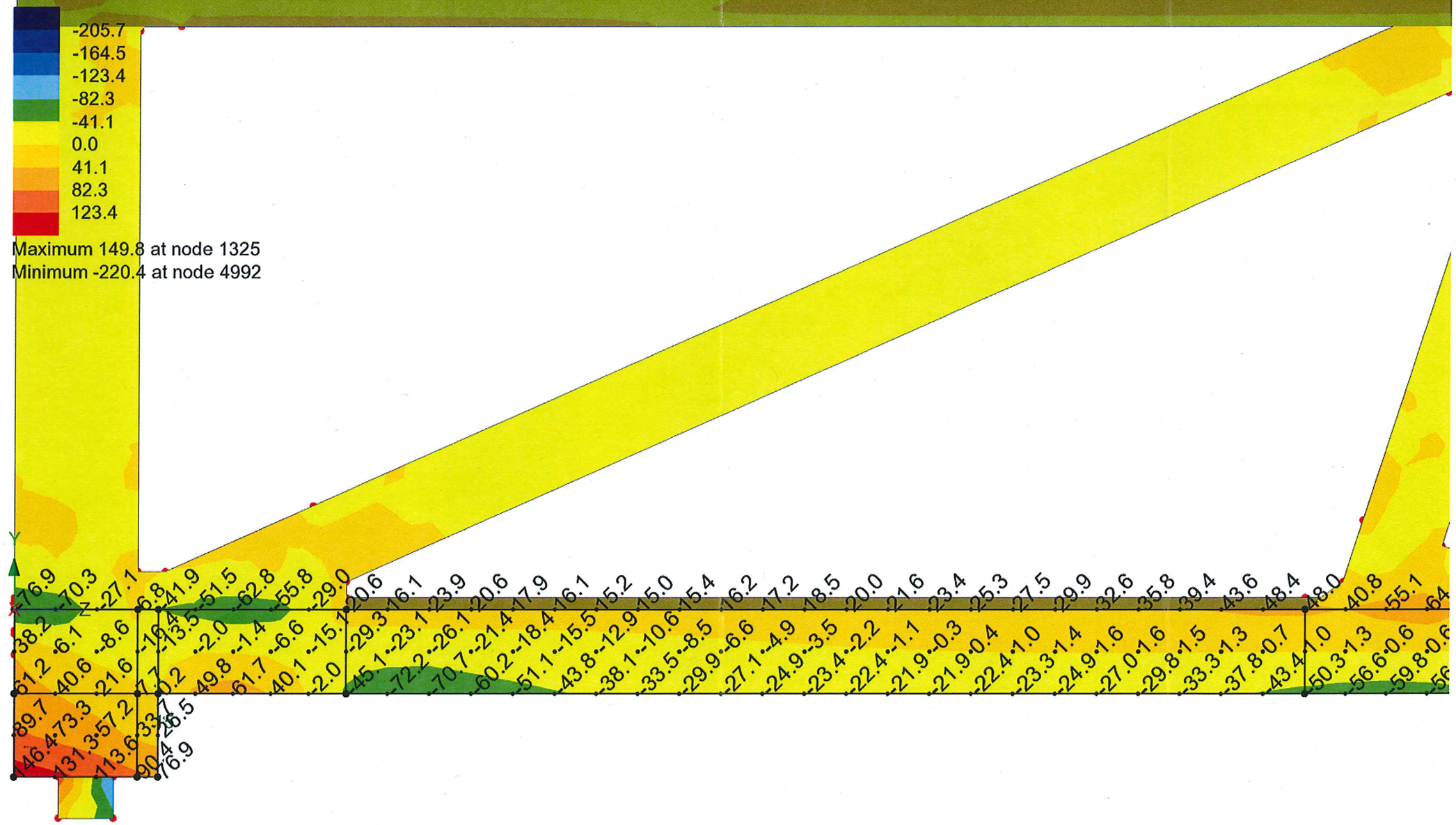

E.J.

Panel 1

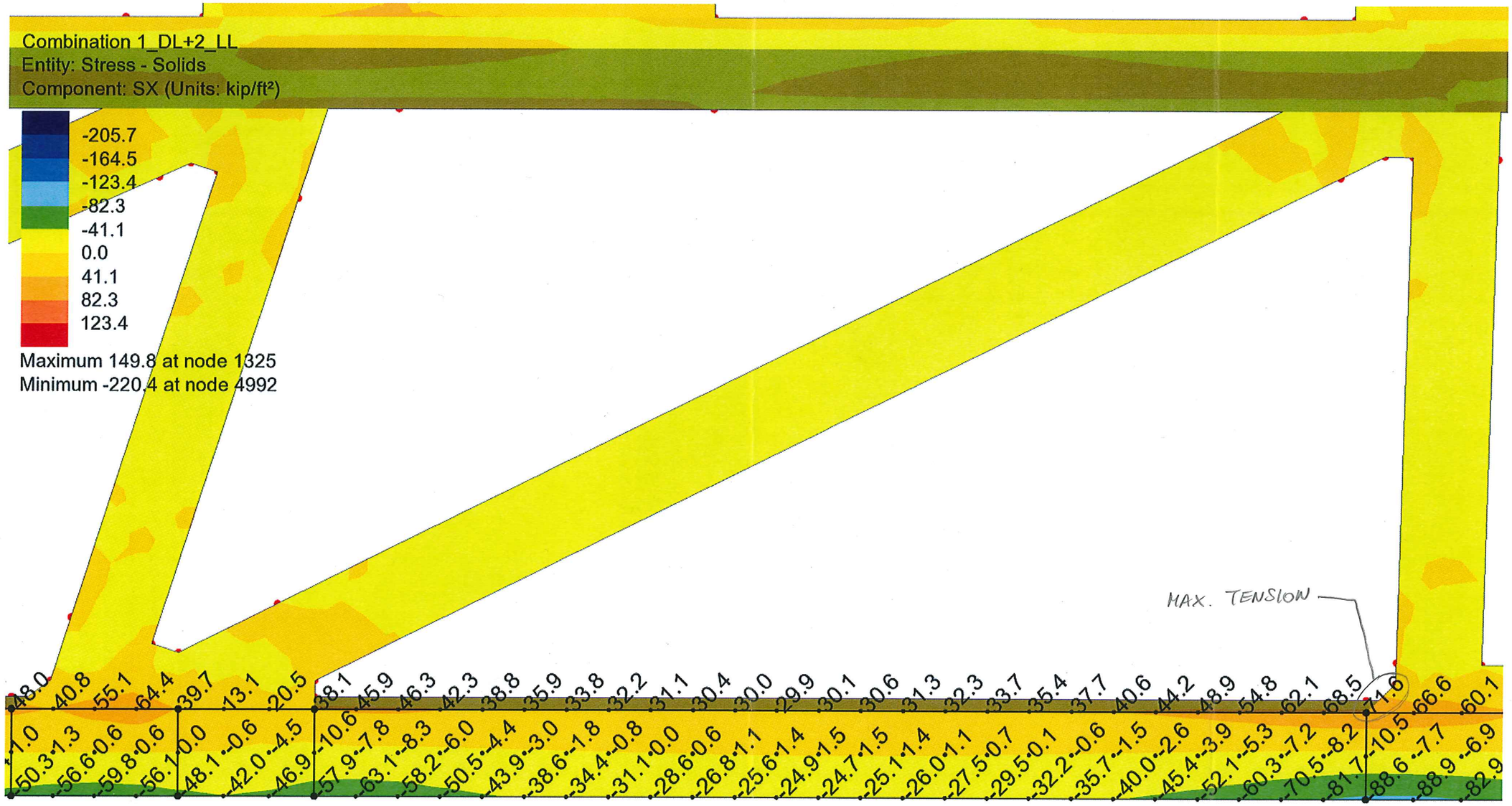
Combination 1_DL+2_LL
Entity: Stress - Solids
Component: SX (Units: kip/ft²)
-205.7
-164.5
-123.4
-82.3
-41.1
0.0
41.1
82.3
123.4
Maximum 149.8 at node 1325
Minimum -220.4 at node 4992
MAX. TENSION
48.0 40.8 55.1 64.4 39.7 13.1 20.5 38.1 45.9 46.3 42.3 38.8 35.9 33.8 32.2 31.1 30.4 30.0 29.9 30.1 30.6 31.3 32.3 33.7 35.4 37.7 40.6 44.2 48.9 54.8 62.1 68.5 71.6 66.6 60.1
1.0 -50.3 -56.6 -59.8 -56.1 0.0 48.1 42.0 46.9 10.6 57.9 63.1 58.2 50.5 43.9 38.6 34.4 31.1 28.6 26.8 25.6 24.9 24.7 25.1 26.0 27.5 29.5 32.2 35.7 40.0 45.4 52.1 60.3 70.5 81.7 10.5 88.6 88.9 82.9

Panel 2

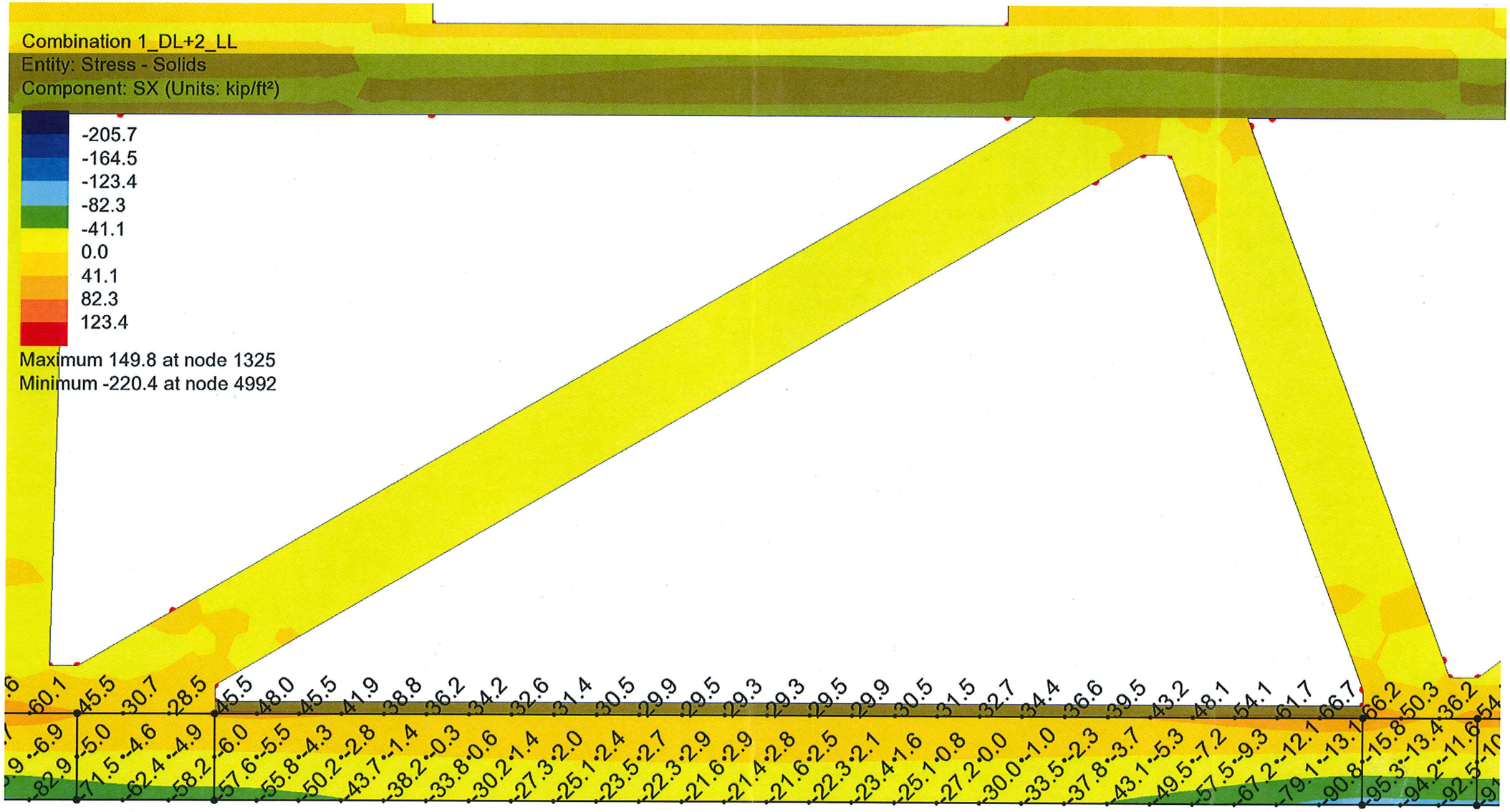
Combination 1_DL+2_LL
Entity: Stress - Solids
Component: SX (Units: kip/ft²)
-205.7
-164.5
-123.4
-82.3
-41.1
0.0
41.1
82.3
123.4
Maximum 149.8 at node 1325
Minimum -220.4 at node 4992
.6 -60.1 45.5 -30.7 28.5 45.5 -48.0 45.5 -41.9 38.8 -36.2 34.2 -32.6 31.4 -30.5 29.9 -29.5 29.3 -29.3 29.5 -29.9 30.5 -31.5 32.7 -34.4 36.6 -39.5 43.2 -48.1 54.1 -61.7 66.7 -66.2 50.3 -36.2 54
.9 -6.9 -82.9 -5.0 -4.6 -71.5 -4.9 -62.4 -6.0 -58.2 -57.6 -5.5 -55.8 -4.3 -50.2 -2.8 -43.7 -1.4 -38.2 -0.3 -33.8 0.6 -30.2 1.4 -27.3 2.0 -25.1 2.4 -23.5 2.7 -22.3 2.9 -21.6 2.9 -21.4 2.8 -21.6 2.5 -22.3 2.1 -23.4 1.6 -25.1 0.8 -27.2 0.0 -30.0 -1.0 -33.5 -2.3 -37.8 -3.7 -43.1 -5.3 -49.5 -7.2 -57.5 -9.3 -67.2 -12.1 -79.1 -13.1 -90.8 -15.8 -95.3 -13.4 -94.2 -11.6 -92.5 -10

Panel 3

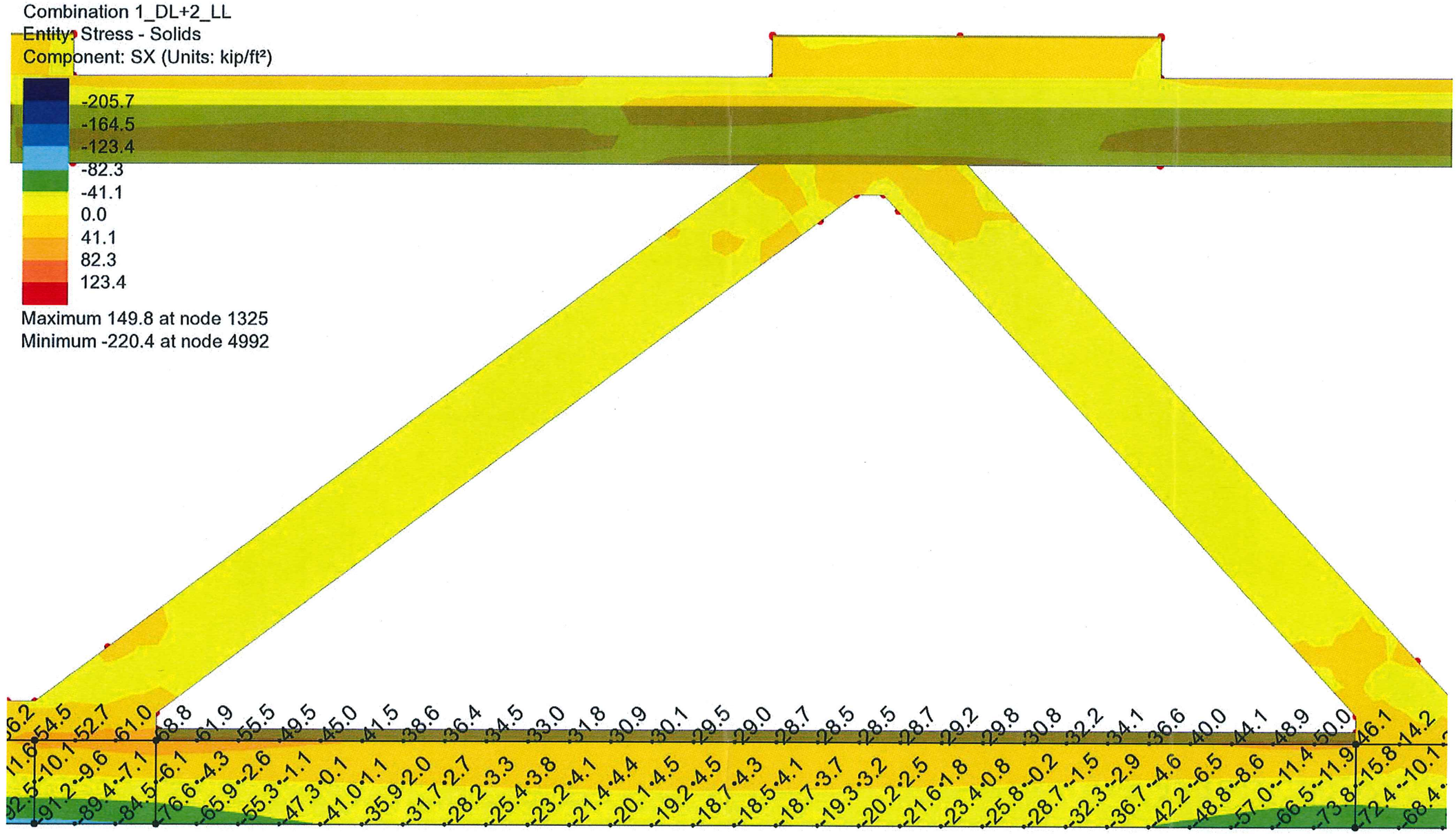
Combination 1_DL+2_LL
Entity: Stress - Solids
Component: SX (Units: kip/ft²)
-205.7
-164.5
-123.4
-82.3
-41.1
0.0
41.1
82.3
123.4
Maximum 149.8 at node 1325
Minimum -220.4 at node 4992

Panel 4

Combination 1_DL+2_LL
Entity: Stress - Solids
Component: SX (Units: kip/ft²)

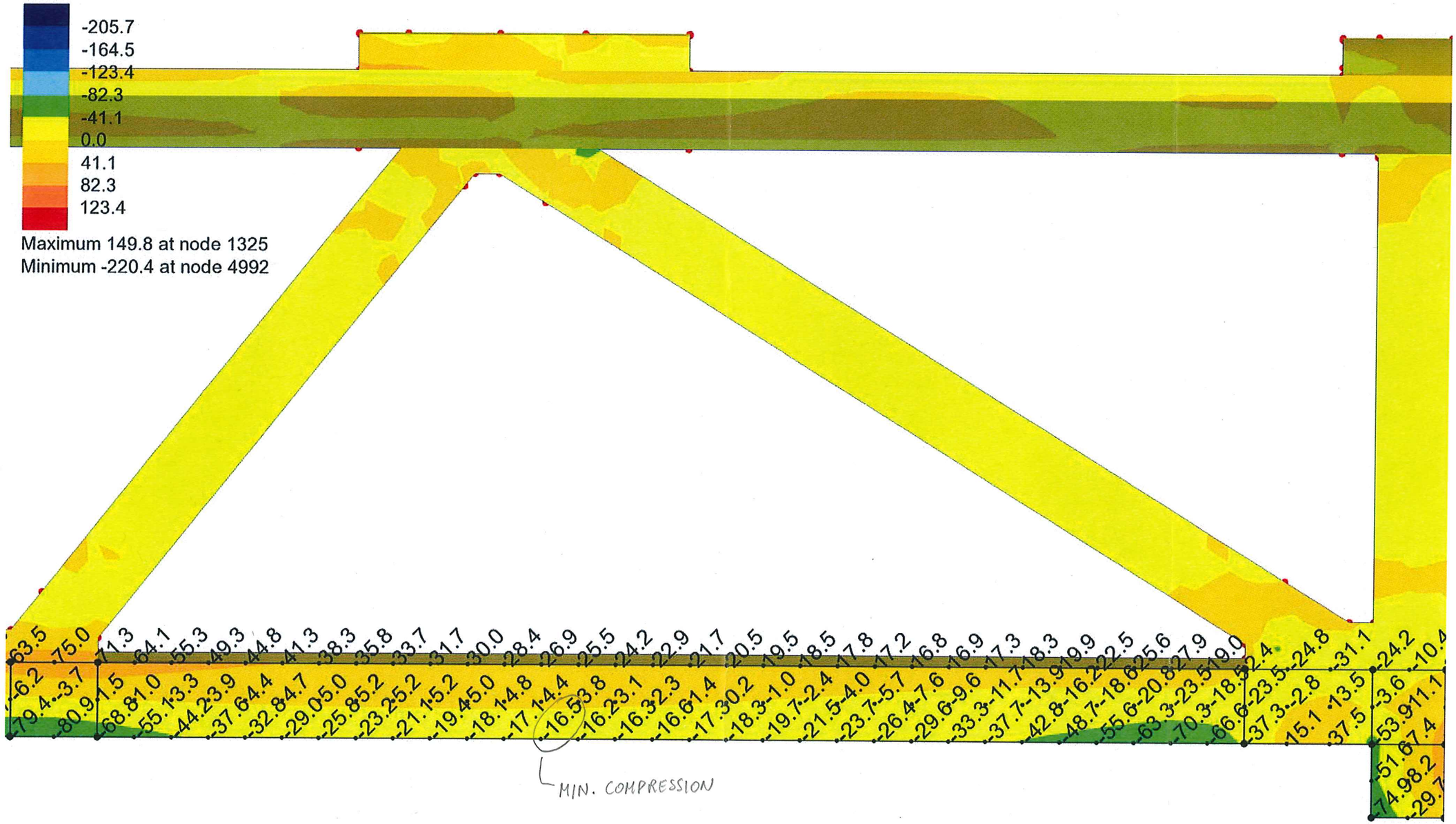

Panel S

FIGG	Project: FIU	Date: 8-13-16	Page: 1 Of
	Project Number: 2262.03	Designed: EDL	
	Description: CANOPY TRANSVERSE DESIGN	Checked: MF	

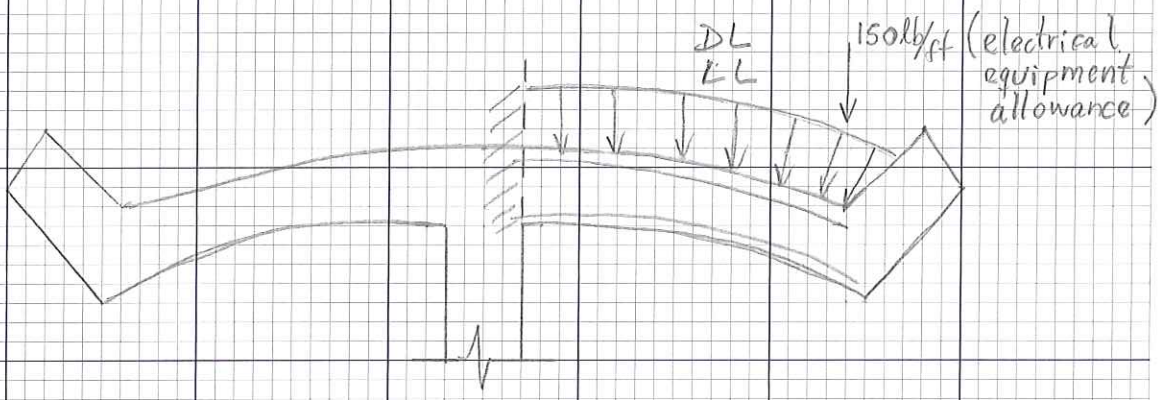

$A_{CANOPY} = 7.34\ ft^2$

$DL = 0.15\ K/ft^3 \times 7.34\ ft^2 \times 1\ ft = 1.10\ K/ft$

$M_{DL} = 1.10\ K/ft \times (3.583\ ft) = \underline{3.95\ K\cdot ft/ft}$

$LL = 20\ psf$

$w_{LL} = 0.02\ K/ft^2 \times 1\ ft = 0.02\ K/ft$

$M_{LL} = \frac{wL^2}{2} = \frac{0.02\ K/ft\ (7.125\ ft)^2}{2} = \underline{0.51\ K\cdot ft/ft}$

$DW = 0.150\ K/ft \times 1\ ft = 0.15\ K/ft$

$M_{DW} = 0.15\ K/ft \times (5.375\ ft) = \underline{0.81\ K\cdot ft/ft}$

$M_u = 1.25\,DL + 1.5\,DW + 1.75\,LL = 1.25(3.95) + 1.5(0.81) + 1.75(0.51) = \boxed{7.05\ K\cdot ft/ft}$

$M_s = 1.0\,M_{DL} + 1.0\,M_{DW} + 1.0\,M_{LL}$

$= 1.0(3.95) + 1.0(0.81) + 1.0(0.51) = \boxed{5.27\ K\cdot ft/ft}$

$E_c = 33{,}000\,K_1\,w_c^{1.5}\sqrt{f'_c} = 33{,}000\,(0.9)\,(0.145\ kcf)^{1.5}\sqrt{8.5\ ksi} = \underline{4781\ ksi}$

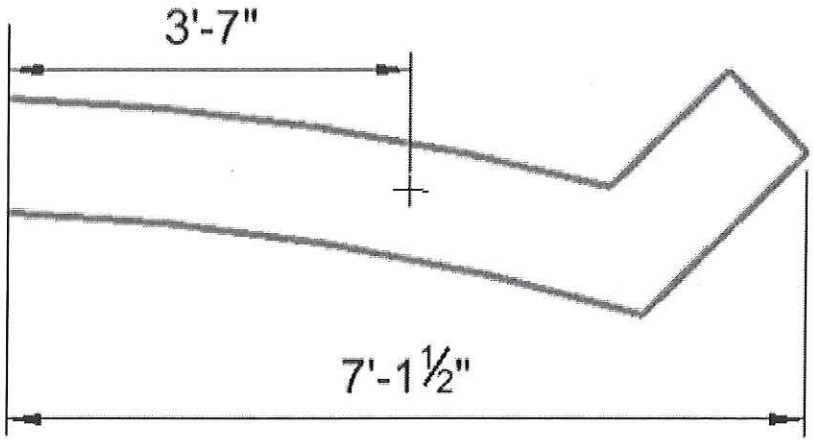
3'-7"
7'-1½"

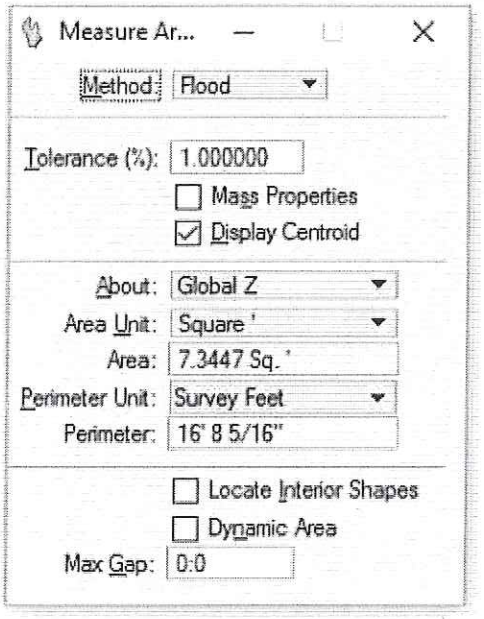
Measure Ar...
Method: Flood
Tolerance (%): 1.000000
Mass Properties
Display Centroid
About: Global Z
Area Unit: Square '
Area: 7.3447 Sq. '
Perimeter Unit: Survey Feet
Perimeter: 16' 8 5/16"
Locate Interior Shapes
Dynamic Area
Max Gap: 0:0

FIGG	Project FIU	Date 8-15-16	Page Of
	Project Number 2262.03	Designed EDL	
	Description CANOPY TRANSVERSE DESIGN	Checked MF	

CONSIDER DRAIN GETS CLOGGED AND WATER RESTS ON TOP OF CANOPY

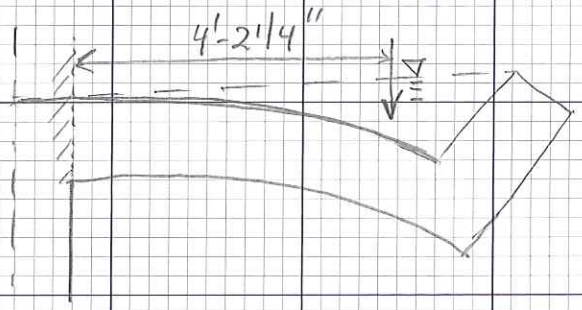

AREA OF WATER = 2.62 ft² (FROM CADD)

$\gamma_w = 62.4\ lb/ft^3$

$W_{water} = 62.4\ lb/ft^3 \times 2.62\ ft^2 \times 1\ ft = 0.163\ K/ft$

$M_{water} = 0.163\ K/ft \times (4.1875\ ft) = 0.68\ K\cdot ft/ft$

NOTE:

THIS LOAD CASE GENERATES A MOMENT LESS THAN THE ALLOWANCE OF 150 lb/ft PROVIDED ON THE PREVIOUS PAGE. THUS, THIS LOAD CASE DOES NOT CONTROL//

FIGG	Project: FIU	Date: 8-13-16	Page / Of
	Project Number: 2262.03	Designed: EDL	
	Description: CANOPY TRANSVERSE DESIGN	Checked: MF	

SHRINKAGE AND TEMPERATURE REINFORCEMENT (AASHTO LRFD 5.10.8)

$$A_s \geq \frac{1.30\,bh}{2(b+h)f_y}, \quad 0.11 \leq A_s \leq 0.60$$

$h = 1\,ft = 12\,in$

$b = 16\,ft = 192\,in$

$$A_s = \frac{1.30(192\,in \times 12\,in)}{2(192\,in + 12\,in)\,60\,ksi} = 0.12\,in^2/ft$$

USE #4 @ 12" FOR MIN. REINFORCEMENT IN CANOPY

FIU Canopy Transverse Design: Tension at Top

Input

$M_u := 7.05 \frac{kip \cdot ft}{ft}$

$M_s := 5.27 \frac{kip \cdot ft}{ft}$

$b := 12in$

$h := 1.0ft$

$cover := 2.25in$

$f_c := 8.5ksi$

$f_y := 60ksi$

$E_s := 29000ksi$

$E_c := 4781ksi$

$\phi_f := 0.9$

$$\beta_1 := \begin{cases} 0.85 & \text{if } f_c \le 4ksi \\ \max\left[0.85 - 0.05 \cdot \left(\frac{f_c}{1000psi} - 4\right), 0.65\right] & \text{if } f_c > 4ksi \end{cases}$$

AASHTO 5.7.2.2

$\beta_1 = 0.65$

Strength Design

$BarSize_{top} := 5$ $d_{bar\_top} := 0.625in$ $A_{bar\_top} := 0.31in^2$ Trial bar size

$spacing_{top} := 12in$ Spacing of vertical reinforcement

$d := h - cover - 0.5 \cdot d_{bar\_top} = 9.44 \cdot in$ Effective depth of section

$a := \frac{A_{bar\_top} \cdot f_y}{0.85 \cdot f_c \cdot b}$ Depth of equivalent compression block

$a = 0.21 \cdot in$

$\phi M_n := \phi_f \cdot \frac{A_{bar\_top}}{spacing_{top}} \cdot f_y \cdot \left(d - \frac{a}{2}\right)$ Factored moment capacity of section

$\phi M_n = 13.02 \cdot \frac{kip \cdot ft}{ft}$

$Check1 := if(\phi M_n \ge M_u, "OK", "NG")$

$Check1 = "OK"$

Minimum Reinforcement Check (ASSHTO 5.7.3.3.2)

$f_r := 0.24 \cdot \sqrt{f_c \cdot ksi} = 0.70 \cdot ksi$ AASHTO 5.4.2.6

$I := \frac{h^3}{12} = 144 \cdot in^3$ Moment of Inertia at section checked (moment calculated per foot-width disregarded)

$c := \frac{h}{2} = 6 \cdot in$

$\gamma_1 := 1.6 \qquad \gamma_3 := 0.67$

$M_{cr} := \frac{\gamma_3 \cdot \gamma_1 \cdot f_r \cdot I}{c} = 18.0 \cdot \frac{kip \cdot ft}{ft}$

$Check2 := if\left(\phi M_n \geq \min\left(M_{cr}, 1.33 \cdot M_u\right), "OK", "NG"\right)$

Check2 = "OK"

Crack Control Check (AASHTO 5.7.3.4)

$n := \frac{E_s}{E_c} = 6.066$ Modular ratio

$M_{SRV} := M_s = 5.27 \cdot \frac{kip \cdot ft}{ft}$ Controlling service moment

$A_s := \frac{A_{bar\_top}}{spacing_{top}} = 0.31 \cdot \frac{in^2}{ft}$ Area of steel provided

$\rho := \frac{A_s}{d} = 0.003$ Reinforcement ratio

$k := \sqrt{(\rho \cdot n)^2 + 2 \cdot \rho \cdot n} - \rho \cdot n = 0.166$

$j := 1 - \frac{k}{3} = 0.945$

$f_{ss} := \frac{M_{SRV}}{A_s \cdot j \cdot d} = 22.89 \cdot ksi$ Tensile stress in rebar under service loads

$d_c := 2in + \frac{d_{bar\_top}}{2} = 2.31 \cdot in$ Thickness of concrete cover measured from extreme tension fiber to center of closest layer of flexural reinforcement

$\beta_s := 1 + \frac{d_c}{0.7 \cdot (h - d_c)} = 1.341$

Exposure_Class := 1

$$\gamma_e := \begin{cases} 1.00 & \text{if Exposure\_Class} = 1 \\ 0.75 & \text{otherwise} \end{cases}$$

Exposure factor

$\gamma_e = 1.00$

$$s_{max} := \frac{700 \cdot \gamma_e}{\beta_s \cdot f_{ss} \cdot \frac{in}{kip}} - 2 \cdot d_c = 18.18 \cdot in$$

Maximum spacing of reinforcement for crack control (AASHTO 5.7.3.4-1)

$\text{Check3} := \text{if}(\text{spacing}_{top} \le s_{max}, \text{"OK"}, \text{"NG"})$

Check3 = "OK"

FIU Canopy Transverse Design: Tension at Top (considering recess slot for lighting)

Input

$M_u := 7.05 \frac{kip \cdot ft}{ft}$

$M_s := 5.27 \frac{kip \cdot ft}{ft}$

$b := 12in$

$h := 8in$

$cover := 2.25in$

$f_c := 8.5ksi$

$f_y := 60ksi$

$E_s := 29000ksi$

$E_c := 4781ksi$

$\phi_f := 0.9$

$$\beta_1 := \begin{cases} 0.85 & \text{if } f_c \le 4ksi \\ \max\left[0.85 - 0.05 \cdot \left(\frac{f_c}{1000psi} - 4\right), 0.65\right] & \text{if } f_c > 4ksi \end{cases}$$

AASHTO 5.7.2.2

$\beta_1 = 0.65$

Strength Design

$BarSize_{top} := 5$ $\quad d_{bar\_top} := 0.625in$ $\quad A_{bar\_top} := 0.31in^2$ Trial bar size

$spacing_{top} := 6in$ Spacing of vertical reinforcement

$d := h - cover - 0.5 \cdot d_{bar\_top} = 5.44 \cdot in$ Effective depth of section

$$a := \frac{A_{bar\_top} \cdot f_y}{0.85 \cdot f_c \cdot b}$$ Depth of equivalent compression block

$a = 0.21 \cdot in$

$$\phi M_n := \phi_f \cdot \frac{A_{bar\_top}}{spacing_{top}} \cdot f_y \cdot \left(d - \frac{a}{2}\right)$$ Factored moment capacity of section

$\phi M_n = 14.87 \cdot \frac{kip \cdot ft}{ft}$

$Check1 := if(\phi M_n \ge M_u, "OK", "NG")$

$Check1 = "OK"$

Minimum Reinforcement Check (ASSHTO 5.7.3.3.2)

$f_r := 0.24 \cdot \sqrt{f_c \cdot ksi} = 0.70 \cdot ksi$ AASHTO 5.4.2.6

$I := \frac{h^3}{12} = 42.667 \cdot in^3$ Moment of Inertia at section checked (moment calculated per foot-width disregarded)

$c := \frac{h}{2} = 4 \cdot in$

$\gamma_1 := 1.6 \qquad \gamma_3 := 0.67$

$M_{cr} := \frac{\gamma_3 \cdot \gamma_1 \cdot f_r \cdot I}{c} = 8.0 \cdot \frac{kip \cdot ft}{ft}$

$Check2 := if\left(\phi M_n \geq \min\left(M_{cr}, 1.33 \cdot M_u\right), "OK", "NG"\right)$

Check2 = "OK"

Crack Control Check (AASHTO 5.7.3.4)

$n := \frac{E_s}{E_c} = 6.066$ Modular ratio

$M_{SRV} := M_s = 5.27 \cdot \frac{kip \cdot ft}{ft}$ Controlling service moment

$A_s := \frac{A_{bar\_top}}{spacing_{top}} = 0.62 \cdot \frac{in^2}{ft}$ Area of steel provided

$\rho := \frac{A_s}{d} = 0.01$ Reinforcement ratio

$k := \sqrt{(\rho \cdot n)^2 + 2 \cdot \rho \cdot n} - \rho \cdot n = 0.287$

$j := 1 - \frac{k}{3} = 0.904$

$f_{ss} := \frac{M_{SRV}}{A_s \cdot j \cdot d} = 20.74 \cdot ksi$ Tensile stress in rebar under service loads

$d_c := 2in + \frac{d_{bar\_top}}{2} = 2.31 \cdot in$ Thickness of concrete cover measured from extreme tension fiber to center of closest layer of flexural reinforcement

$\beta_s := 1 + \frac{d_c}{0.7 \cdot (h - d_c)} = 1.581$

Exposure_Class := 1

$$\gamma_e := \begin{cases} 1.00 & \text{if Exposure\_Class} = 1 \\ 0.75 & \text{otherwise} \end{cases}$$

Exposure factor

$\gamma_e = 1.00$

$$s_{max} := \frac{700 \cdot \gamma_e}{\beta_s \cdot f_{ss} \cdot \frac{in}{kip}} - 2 \cdot d_c = 16.72 \cdot in$$

Maximum spacing of reinforcement for crack control (AASHTO 5.7.3.4-1)

$\text{Check3} := \text{if}(\text{spacing}_{top} \le s_{max}, \text{"OK"}, \text{"NG"})$

Check3 = "OK"

FIGG	Project: FIU	Date: 10-27-16	Page: 1 Of
	Project Number: 2262.03	Designed: EDL	
	Description: CANOPY TRANSVERSE DESIGN	Checked:	

MOMENT DEMAND CAUSED BY DEVIATION OF TENDONS

- ALL CANOPY TENDONS: 12K6

$$P = 12(0.217\ in^2)(270\ ksi)\,0.75 = 527.3\ K$$

↑ STRESSED TO 75%

- AT SOUTH END, RADIUS OF TENDON DEVIATIONS ARE AS FOLLOWS:

TENDON	RADIUS
C1	30'
C2	30'
C3	30'
C4	50'

- RADIAL FORCES:

$$P_{C1} = \frac{527.3\ K}{30\ ft} = 17.6\ K/ft \Rightarrow \text{SAME FOR } P_{C2} \text{ \& } P_{C3}$$

$$P_{C4} = \frac{527.3\ K}{50\ ft} = 10.5\ K/ft$$

- CONSERVATELY, IGNORE P_{C1} SINCE IT WILL COUNTERACT THE EFFECTS OF OTHER TENDONS (SEE SKETCH ATTACHED):

$$M_{PT} = 17.6\ K/ft\,(0.25\ in/12) + 17.6\ K/ft\,(2.125\ in/12) + 10.5\ K/ft\,(4.75\ in/12)$$

$$M_{PT} = 7.65\ K\cdot ft/ft$$

- ADDING THIS ADDITIONAL MOMENT TO THE MOMENT DEMAND CALCULATED PREVIOUSLY:

$$M_u = 7.05\ K\cdot ft/ft + 1.0(7.65\ K\cdot ft/ft) = \boxed{14.7\ K\cdot ft/ft}$$

$$M_s = 5.27\ K\cdot ft/ft + 1.0(7.65\ K\cdot ft/ft) = \boxed{12.9\ K\cdot ft/ft}$$

2/

SOUTH END - CANOPY

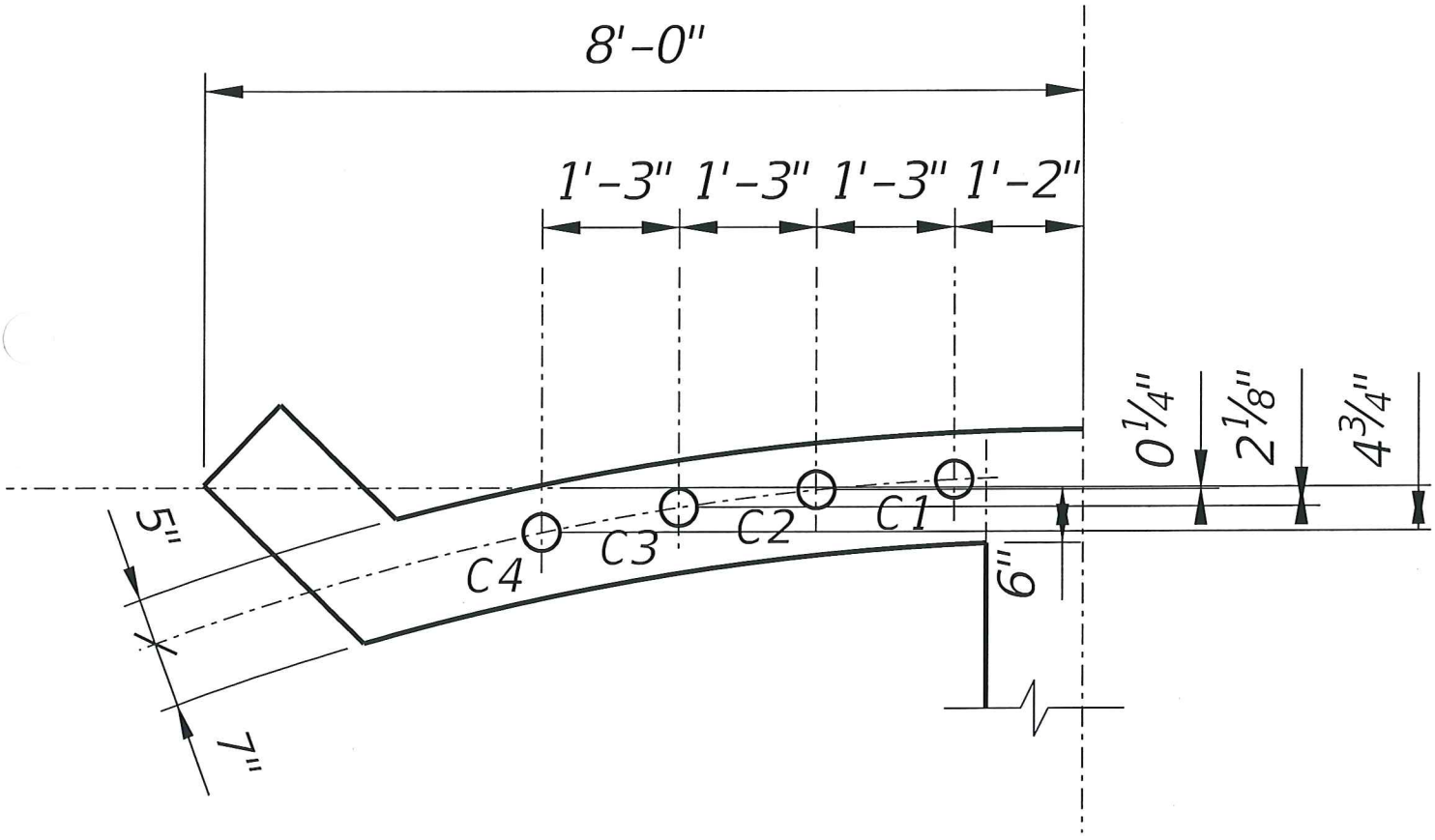

FIU Canopy Transverse Design: Tension at Top - Transverse Deviation Zones

Input

$M_u := 14.7 \frac{kip \cdot ft}{ft}$

$M_s := 12.9 \frac{kip \cdot ft}{ft}$

$b := 12in$

$h := 1.0ft$

$cover := 2.25in$

$f_c := 8.5ksi$

$f_y := 60ksi$

$E_s := 29000ksi$

$E_c := 4781ksi$

$\phi_f := 0.9$

$$\beta_1 := \begin{cases} 0.85 & \text{if } f_c \le 4ksi \\ \max\left[0.85 - 0.05 \cdot \left(\frac{f_c}{1000psi} - 4\right), 0.65\right] & \text{if } f_c > 4ksi \end{cases}$$

AASHTO 5.7.2.2

$\beta_1 = 0.65$

Strength Design

$BarSize_{top} := 5$ $d_{bar\_top} := 0.625in$ $A_{bar\_top} := 0.31in^2$ Trial bar size

$spacing_{top} := 6in$ Spacing of vertical reinforcement

$d := h - cover - 0.5 \cdot d_{bar\_top} = 9.44 \cdot in$ Effective depth of section

$$a := \frac{A_{bar\_top} \cdot f_y}{0.85 \cdot f_c \cdot b}$$ Depth of equivalent compression block

$a = 0.21 \cdot in$

$$\phi M_n := \phi_f \cdot \frac{A_{bar\_top}}{spacing_{top}} \cdot f_y \cdot \left(d - \frac{a}{2}\right)$$ Factored moment capacity of section

$\phi M_n = 26.03 \cdot \frac{kip \cdot ft}{ft}$

$Check1 := if(\phi M_n \ge M_u, "OK", "NG")$

$Check1 = "OK"$

1278

Minimum Reinforcement Check (ASSHTO 5.7.3.3.2)

$f_r := 0.24 \cdot \sqrt{f_c \cdot ksi} = 0.70 \cdot ksi$ AASHTO 5.4.2.6

$I := \frac{h^3}{12} = 144 \cdot in^3$ Moment of Inertia at section checked (moment calculated per foot-width disregarded)

$c := \frac{h}{2} = 6 \cdot in$

$\gamma_1 := 1.6 \qquad \gamma_3 := 0.67$

$M_{cr} := \frac{\gamma_3 \cdot \gamma_1 \cdot f_r \cdot I}{c} = 18.0 \cdot \frac{kip \cdot ft}{ft}$

$Check2 := if\left(\phi M_n \geq \min\left(M_{cr}, 1.33 \cdot M_u\right), "OK", "NG"\right)$

Check2 = "OK"

Crack Control Check (AASHTO 5.7.3.4)

$n := \frac{E_s}{E_c} = 6.066$ Modular ratio

$M_{SRV} := M_s = 12.9 \cdot \frac{kip \cdot ft}{ft}$ Controlling service moment

$A_s := \frac{A_{bar\_top}}{spacing_{top}} = 0.62 \cdot \frac{in^2}{ft}$ Area of steel provided

$\rho := \frac{A_s}{d} = 0.005$ Reinforcement ratio

$k := \sqrt{(\rho \cdot n)^2 + 2 \cdot \rho \cdot n} - \rho \cdot n = 0.227$

$j := 1 - \frac{k}{3} = 0.924$

$f_{ss} := \frac{M_{SRV}}{A_s \cdot j \cdot d} = 28.62 \cdot ksi$ Tensile stress in rebar under service loads

$d_c := 2in + \frac{d_{bar\_top}}{2} = 2.31 \cdot in$ Thickness of concrete cover measured from extreme tension fiber to center of closest layer of flexural reinforcement

$\beta_s := 1 + \frac{d_c}{0.7 \cdot (h - d_c)} = 1.341$

1279

Exposure_Class := 1

$$\gamma_e := \begin{cases} 1.00 & \text{if Exposure\_Class} = 1 \\ 0.75 & \text{otherwise} \end{cases}$$

Exposure factor

$\gamma_e = 1.00$

$$s_{max} := \frac{700 \cdot \gamma_e}{\beta_s \cdot f_{ss} \cdot \frac{in}{kip}} - 2 \cdot d_c = 13.62 \cdot in$$

Maximum spacing of reinforcement for crack control (AASHTO 5.7.3.4-1)

$\text{Check3} := \text{if}(\text{spacing}_{top} \le s_{max}, \text{"OK"}, \text{"NG"})$

Check3 = "OK"

MOMENT DEMAND CAUSED BY DEVIATION OF TENDONS CONTINUED...

• AT NORTH END:

TENDON	RADIUS
C1	30'
C4	50'
C5	30'

• AS IN THE SOUTH END, CONSERVATELY IGNORE P_{C1}:

$$M_{PT} = 17.6\ K/ft\ (0.25\ in/12) + 10.5\ K/ft\ (4.75\ in/12)$$

$$M_{PT} = 4.52\ K\cdot ft/ft$$

• ADDING THIS ADDITIONAL MOMENT TO THE MOMENT DEMAND DUE TO DEAD LOAD AND LIVE LOAD:

$$M_u = 7.05\ K\cdot ft/ft + 1.0(4.52\ K\cdot ft/ft) = \boxed{11.6\ K\cdot ft/ft}$$

$$M_s = 5.27\ K\cdot ft/ft + 1.0(4.52\ K\cdot ft/ft) = \boxed{9.8\ K\cdot ft/ft}$$

• THUS, USE #5 @ 6" AT DEVIATION ZONES.

VII. NODAL ZONES DESIGN

VII. NODAL ZONES DESIGN

Deck Nodal Zones - Interface Shear

For normal-weight concrete placed against a clean concrete surface, free of laitance, with surface intentionally roughened to an anplitude of 0.25 in.

c	0.0	ksi	(Conservatively)
μ	1.0		
K_1	0.25		
K_2	1.5	ksi	
ϕ	0.90		
fy	60	ksi	
f'c	8.5	ksi	

Load Factors			
DC	LL	PT	TU
1.25	1.75	1	0.5

Truss Members	b_{vi} (in)	L_{vi} (in)	A_{cv} (in^2)	P_c (kips)	V_{DC} (kips)	V_{LL} (kips)	V_{PT} (kips)	V_{TU+TD} (kips)	V_{ui} (kips)	A_{vf} (in^2)	A_{vf_prov}
1 & 2	21.0	57.6	1210	1275	670	153	107	310	1368	4.09	4-2 legs of #7
3 & 4	21.0	85.6	1798	579	283	66	564	102	1084	10.43	9-2 legs of #7
5 & 6	21.0	79.3	1664	230	85	20	346	9	491	5.27	6-2 legs of #7
7 & 8	21.0	68.0	1428	449	291	65	-146	76	370	-0.62	6-2 legs of #7
9 & 10	21.0	67.0	1407	703	400	93	-772	-146	181	-8.36	6-2 legs of #7
11& 12	21.0	42.0	882	1233	589	131	-7	55	987	-2.28	4-2 legs of #7

Notes:

1. V_{DC}, V_{LL} and V_{PT} loads from LUSAS F.E. Model (See Finite Element Analysis Calculations)
2. P_c = vertical component of net compression force in diagonals (STRI)

Per AASHTO LRFD 5.8.4.1, the nomimal shear resistance, V_{ni}, used in design shall not be greater than the lesser of:

$V_{ni} \le K_1 f'c A_{cv}$ or $V_{ni} \le K_2 A_{cv}$

Truss Members	V_{ui} (kips)	V_{ni} (kips)	A_{cv} (in^2)	$K_1 f'c A_{cv}$	$K_2 A_{cv}$	Check
1 & 2	1368	1520	1210	2572	1815	OK
3 & 4	1084	1205	1798	3821	2697	OK
5 & 6	491	546	1664	3537	2496	OK
7 & 8	370	412	1428	3035	2142	OK
9 & 10	181	201	1407	2990	2111	OK
11& 12	987	1096	882	1874	1323	OK

Canopy Nodal Zones - Interface Shear

For normal-weight concrete placed against a clean concrete surface, free of laitance, with surface intentionally roughened to an anplitude of 0.25 in.

c	0.0	ksi	(Conservative)
μ	1.0		
K_1	0.25		
K_2	1.5	ksi	
ϕ	0.90		
fy	60	ksi	
f'c	8.5	ksi	

Load Factors			
DC	LL	PT	TU
1.25	1.75	1	0.5

Truss Members	b_{vi} (in)	L_{vi} (in)	A_{cv} (in^2)	P_c (kips)	V_{DC} (kips)	V_{LL} (kips)	V_{PT} (kips)	V_{TU+TD} (kips)	V_{ui} (kips)	A_{vf} (in^2)	A_{vf_prov}
2 & 3	21.0	58.0	1218	1298	457	101	564	326	1474	5.66	7-2 legs of #6
10 & 11	21.0	58.0	1218	1210	552	130	-863	157	133	-17.69	3-2 legs of #6

Notes:

1. V_{DC}, V_{LL} and V_{PT} loads from LUSAS F.E. model (See Attached Results).
2. P_c = vertical component of net compression force in diagonals (STRI).
3. Controlling locations by inspection in F.E. model.

Per AASHTO LRFD 5.8.4.1, the nomimal shear resistance, V_{ni}, used in design shall not be greater than the lesser of:

$V_{ni} \le K_1 f'c A_{cv}$ or $V_{ni} \le K_2 A_{cv}$

Truss Members	V_{ui} (kips)	V_{ni} (kips)	A_{cv} (in^2)	$K_1 f'c A_{cv}$	$K_2 A_{cv}$	Check
2 & 3	1474	1638	1218	2588	1827	OK
10 & 11	133	148	1218	2588	1827	OK

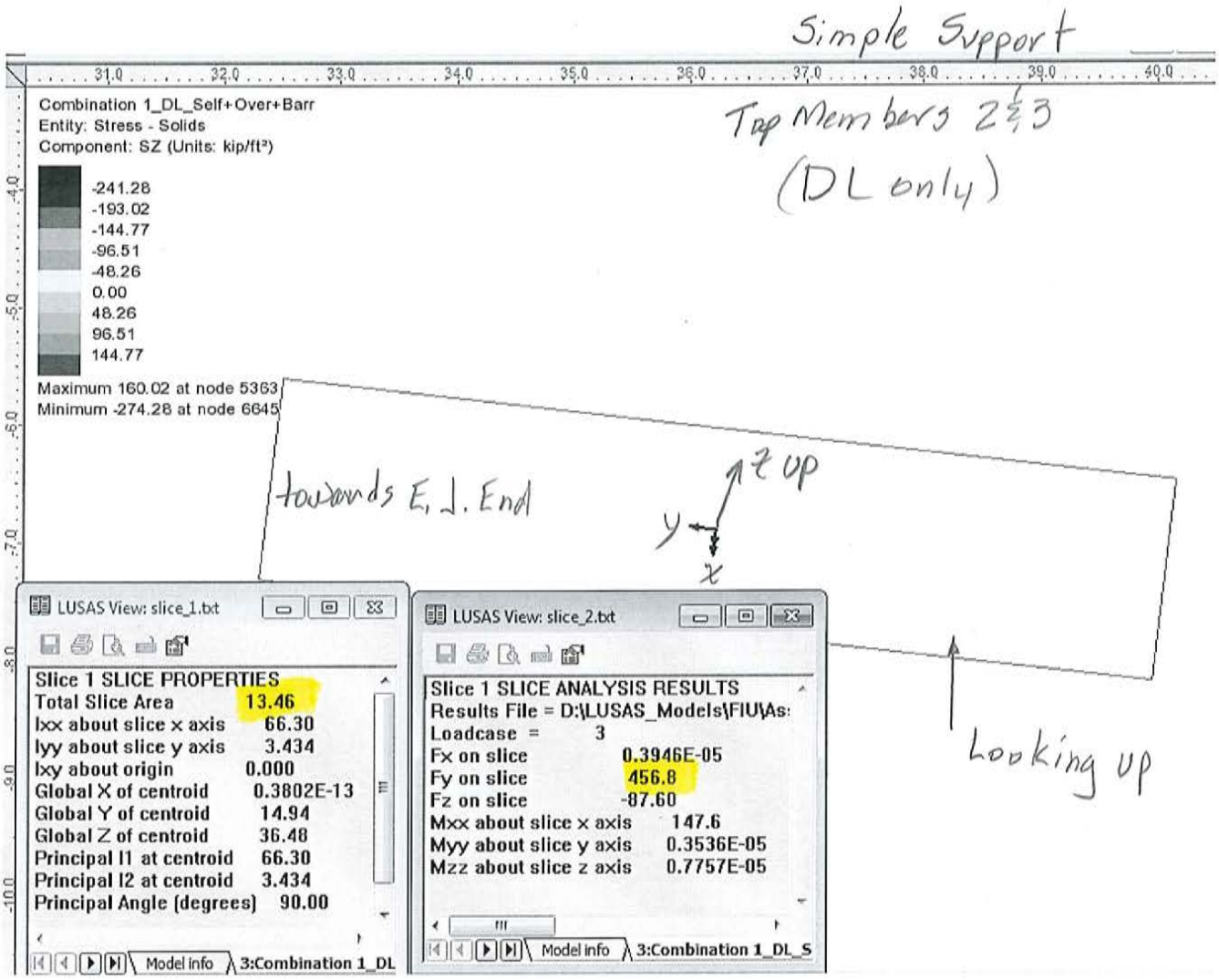
Simple Support
Top Members 2 & 3
(DL only)
Combination 1_DL_Self+Over+Barr
Entity: Stress - Solids
Component: SZ (Units: kip/ft²)
-241.28
-193.02
-144.77
-96.51
-48.26
0.00
48.26
96.51
144.77
Maximum 160.02 at node 5363
Minimum -274.28 at node 6645
towards E. J. End
z up
y
x
Looking up
LUSAS View: slice_1.txt
Slice 1 SLICE PROPERTIES
Total Slice Area 13.46
Ixx about slice x axis 66.30
Iyy about slice y axis 3.434
Ixy about origin 0.000
Global X of centroid 0.3802E-13
Global Y of centroid 14.94
Global Z of centroid 36.48
Principal I1 at centroid 66.30
Principal I2 at centroid 3.434
Principal Angle (degrees) 90.00
Model info
3:Combination 1_DL
LUSAS View: slice_2.txt
Slice 1 SLICE ANALYSIS RESULTS
Results File = D:\LUSAS_Models\FIU\As
Loadcase = 3
Fx on slice 0.3946E-05
Fy on slice 456.8
Fz on slice -87.60
Mxx about slice x axis 147.6
Myy about slice y axis 0.3536E-05
Mzz about slice z axis 0.7757E-05
Model info
3:Combination 1_DL_S

Simple Support

Top Members 2 & 3 (LL only)

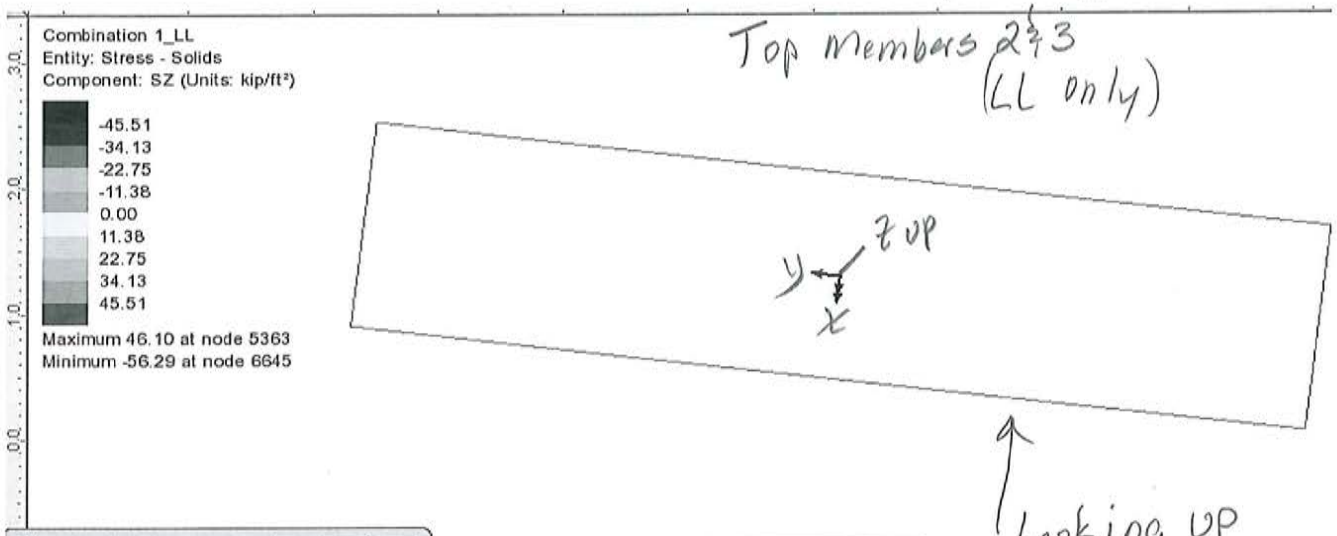

Looking up

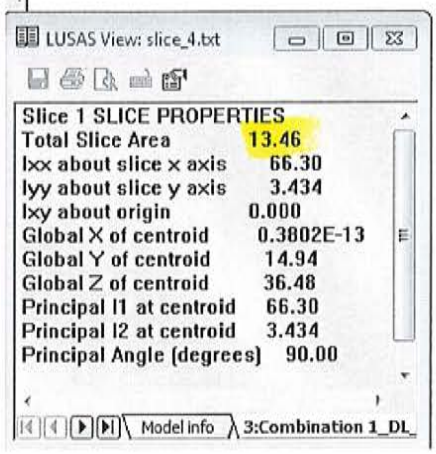

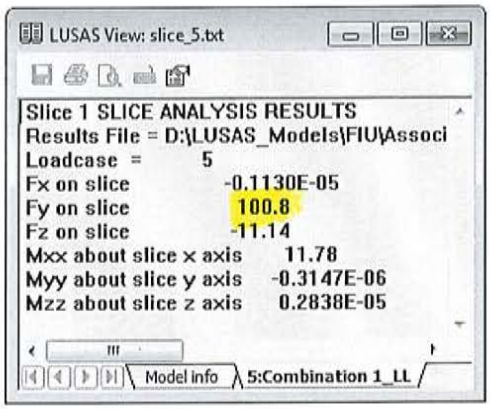

Simple Support

Top Members 2 & 3
(PT only)

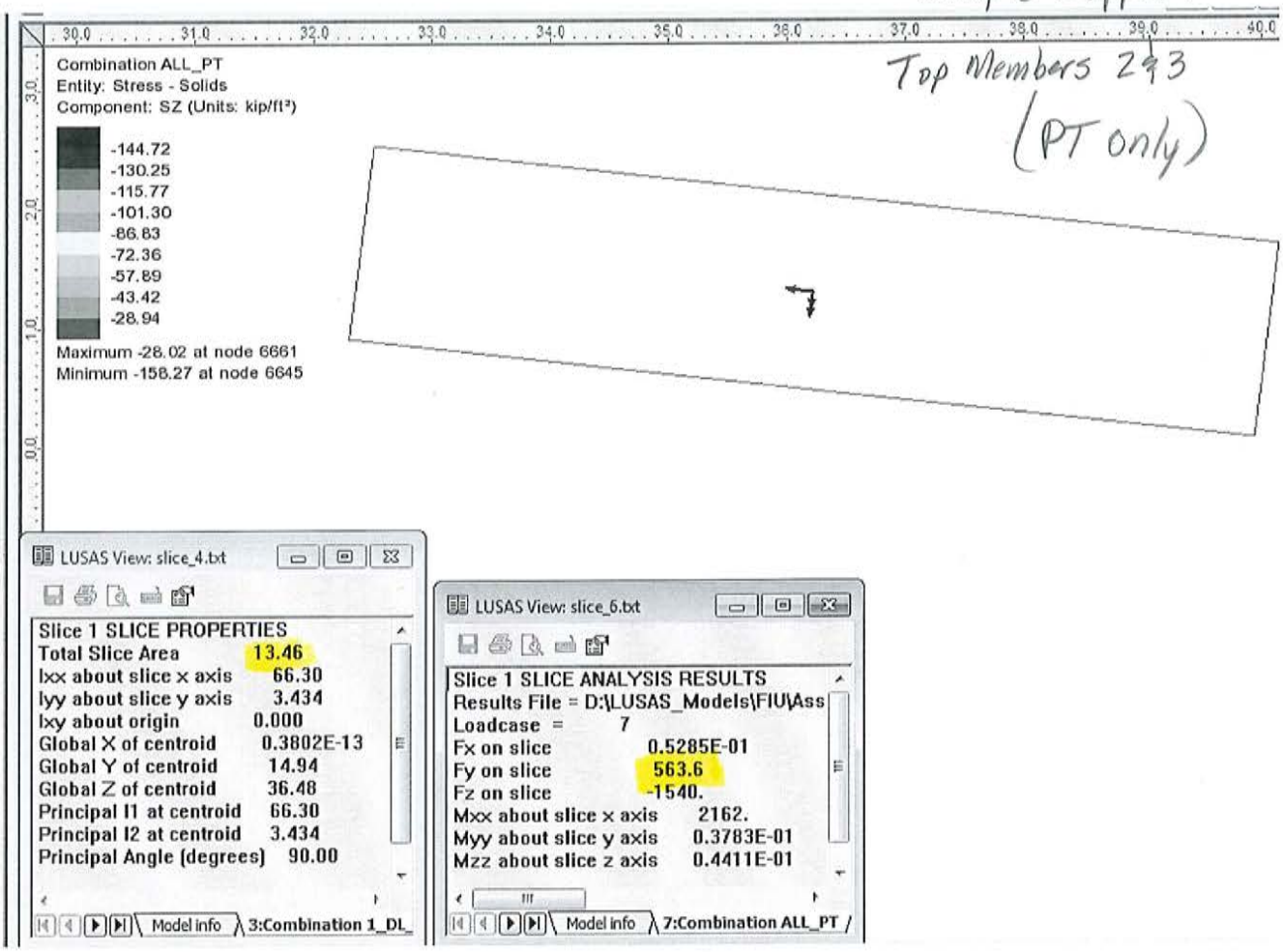

Simple Support

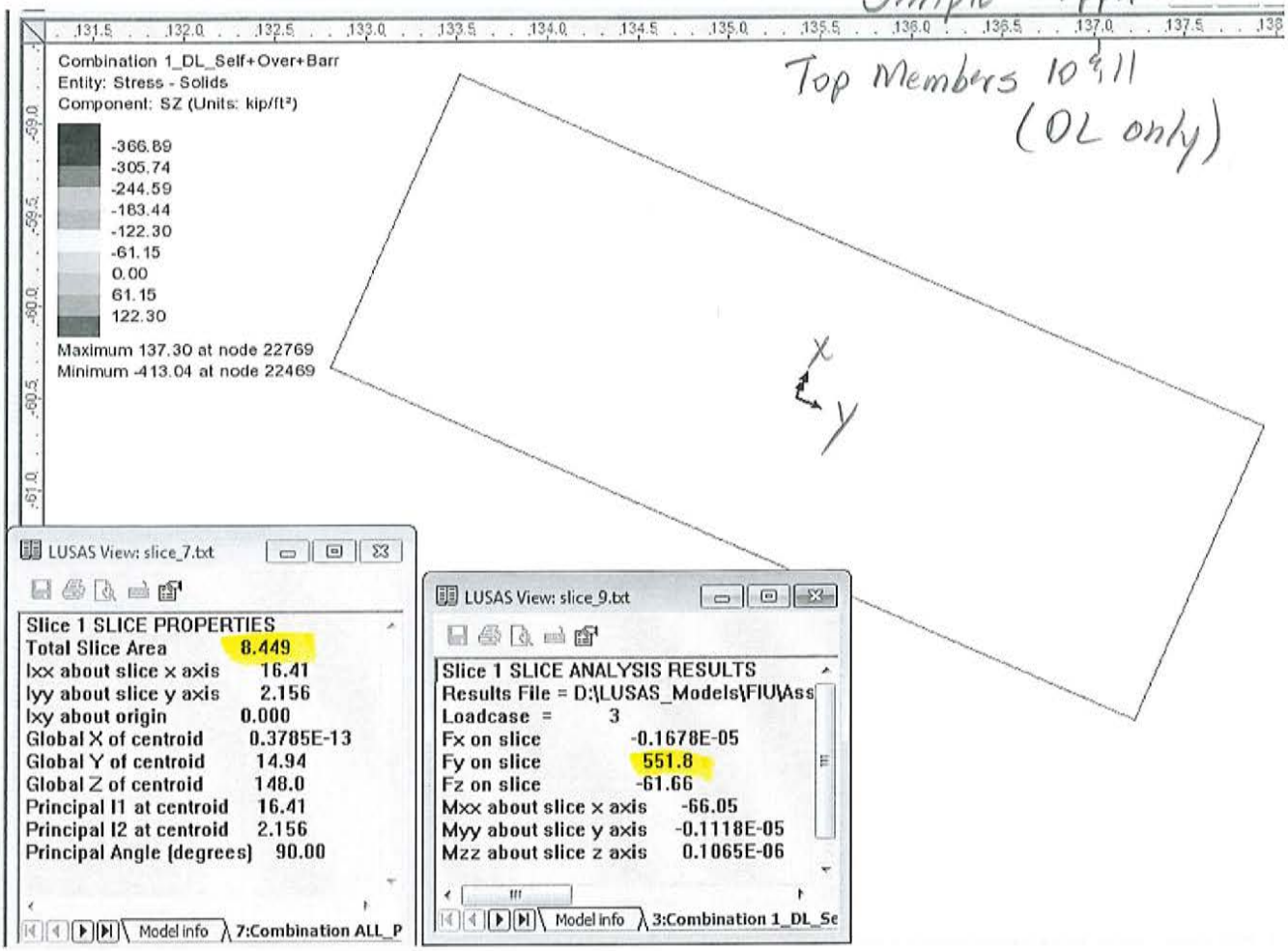

LUSAS View: slice_7.txt

Slice 1 SLICE PROPERTIES

Total Slice Area	8.449
Ixx about slice x axis	16.41
Iyy about slice y axis	2.156
Ixy about origin	0.000
Global X of centroid	0.3785E-13
Global Y of centroid	14.94
Global Z of centroid	148.0
Principal I1 at centroid	16.41
Principal I2 at centroid	2.156
Principal Angle (degrees)	90.00

Model info | 7:Combination ALL_P

LUSAS View: slice_9.txt

Slice 1 SLICE ANALYSIS RESULTS

Results File = D:\LUSAS_Models\FIU\Ass

Loadcase =	3
Fx on slice	-0.1678E-05
Fy on slice	551.8
Fz on slice	-61.66
Mxx about slice x axis	-66.05
Myy about slice y axis	-0.1118E-05
Mzz about slice z axis	0.1065E-06

Model info | 3:Combination 1_DL_Se

Simple Support

Top Members 10 & 11

(LL only)

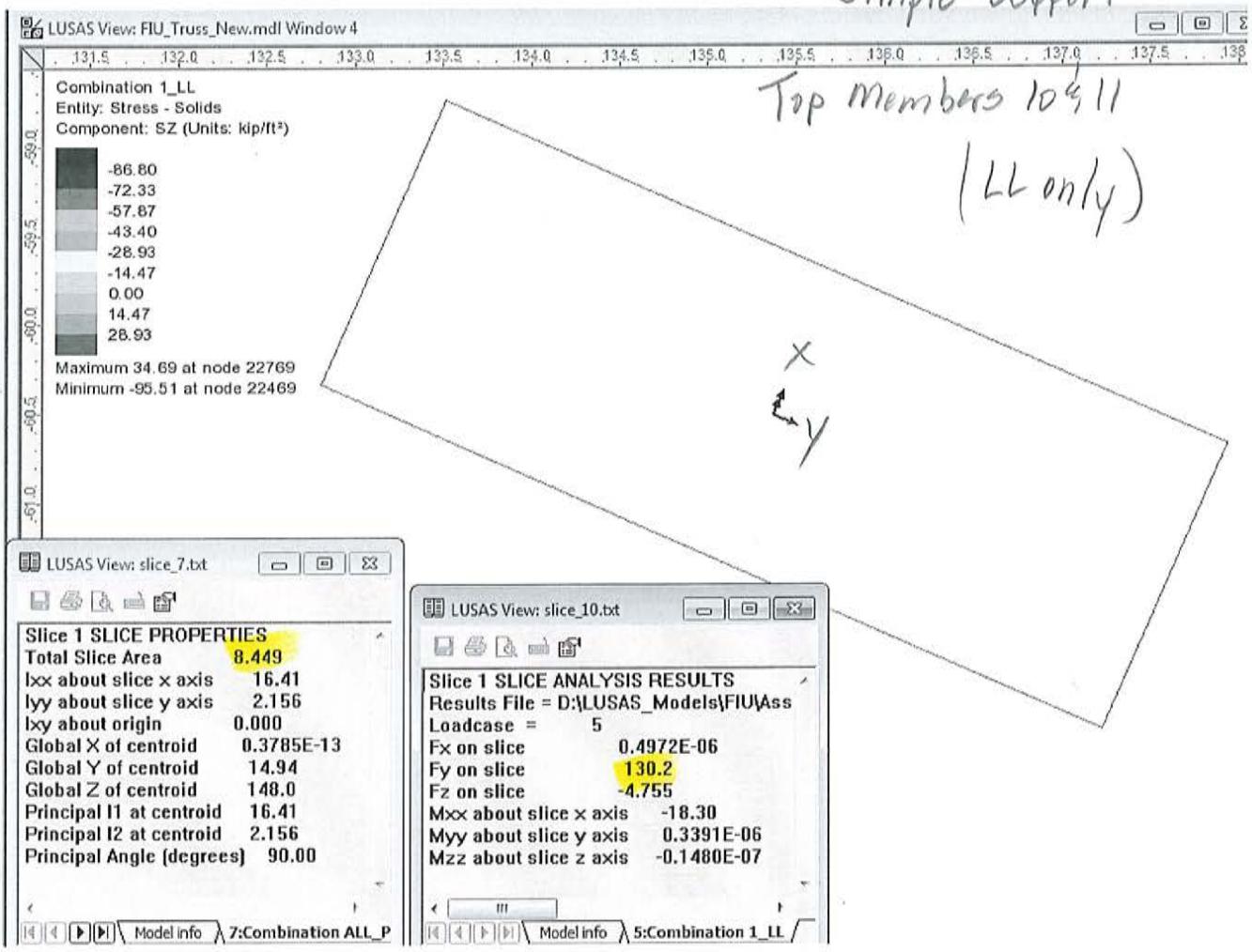

Simple Support

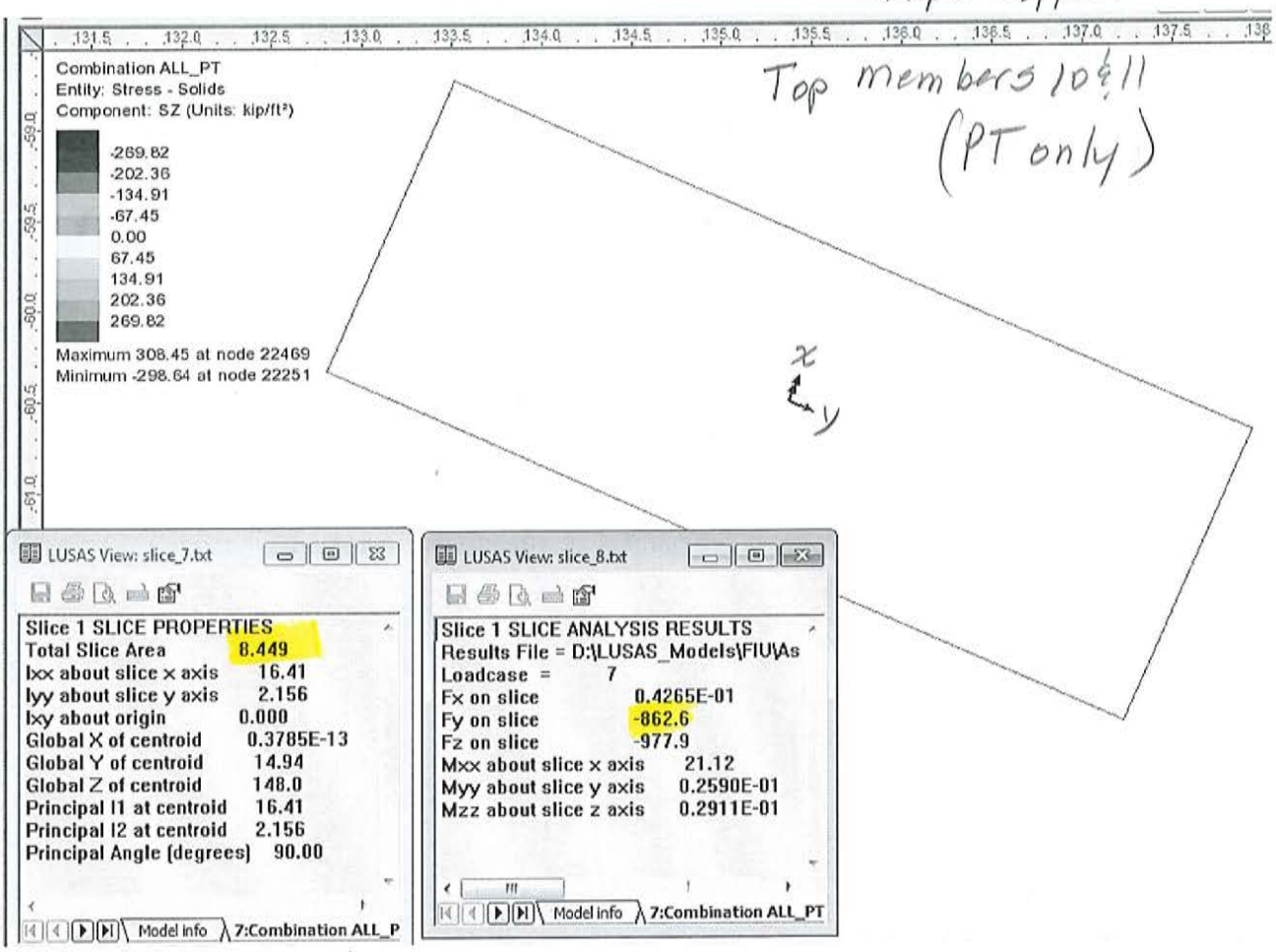

LUSAS View: slice_7.txt

Slice 1 SLICE PROPERTIES

Total Slice Area	8.449
Ixx about slice x axis	16.41
Iyy about slice y axis	2.156
Ixy about origin	0.000
Global X of centroid	0.3785E-13
Global Y of centroid	14.94
Global Z of centroid	148.0
Principal I1 at centroid	16.41
Principal I2 at centroid	2.156
Principal Angle (degrees)	90.00

Model Info | 7:Combination ALL_P

LUSAS View: slice_8.txt

Slice 1 SLICE ANALYSIS RESULTS

Results File = D:\LUSAS_Models\FIU\As

Loadcase = 7

Fx on slice	0.4265E-01
Fy on slice	-862.6
Fz on slice	-977.9
Mxx about slice x axis	21.12
Myy about slice y axis	0.2590E-01
Mzz about slice z axis	0.2911E-01

Model Info | 7:Combination ALL_PT

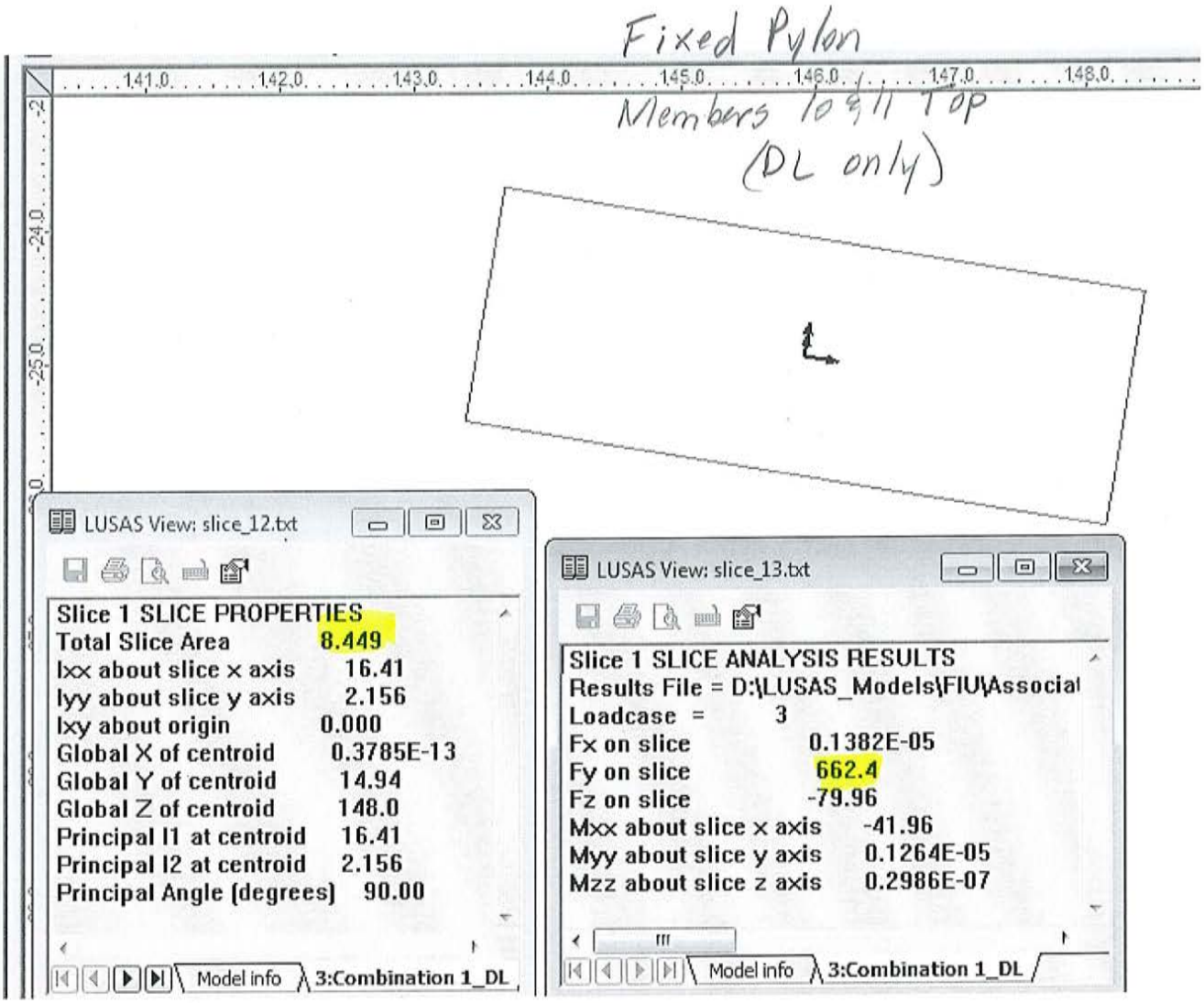
Fixed Pylon
Members to fill Top
(DL only)
141.0
142.0
143.0
144.0
145.0
146.0
147.0
148.0
-24.0
-25.0
LUSAS View: slice_12.txt
Slice 1 SLICE PROPERTIES
Total Slice Area 8.449
Ixx about slice x axis 16.41
Iyy about slice y axis 2.156
Ixy about origin 0.000
Global X of centroid 0.3785E-13
Global Y of centroid 14.94
Global Z of centroid 148.0
Principal I1 at centroid 16.41
Principal I2 at centroid 2.156
Principal Angle (degrees) 90.00
Model info
3:Combination 1_DL
LUSAS View: slice_13.txt
Slice 1 SLICE ANALYSIS RESULTS
Results File = D:\LUSAS_Models\FIU\Associat
Loadcase = 3
Fx on slice 0.1382E-05
Fy on slice 662.4
Fz on slice -79.96
Mxx about slice x axis -41.96
Myy about slice y axis 0.1264E-05
Mzz about slice z axis 0.2986E-07
Model info
3:Combination 1_DL

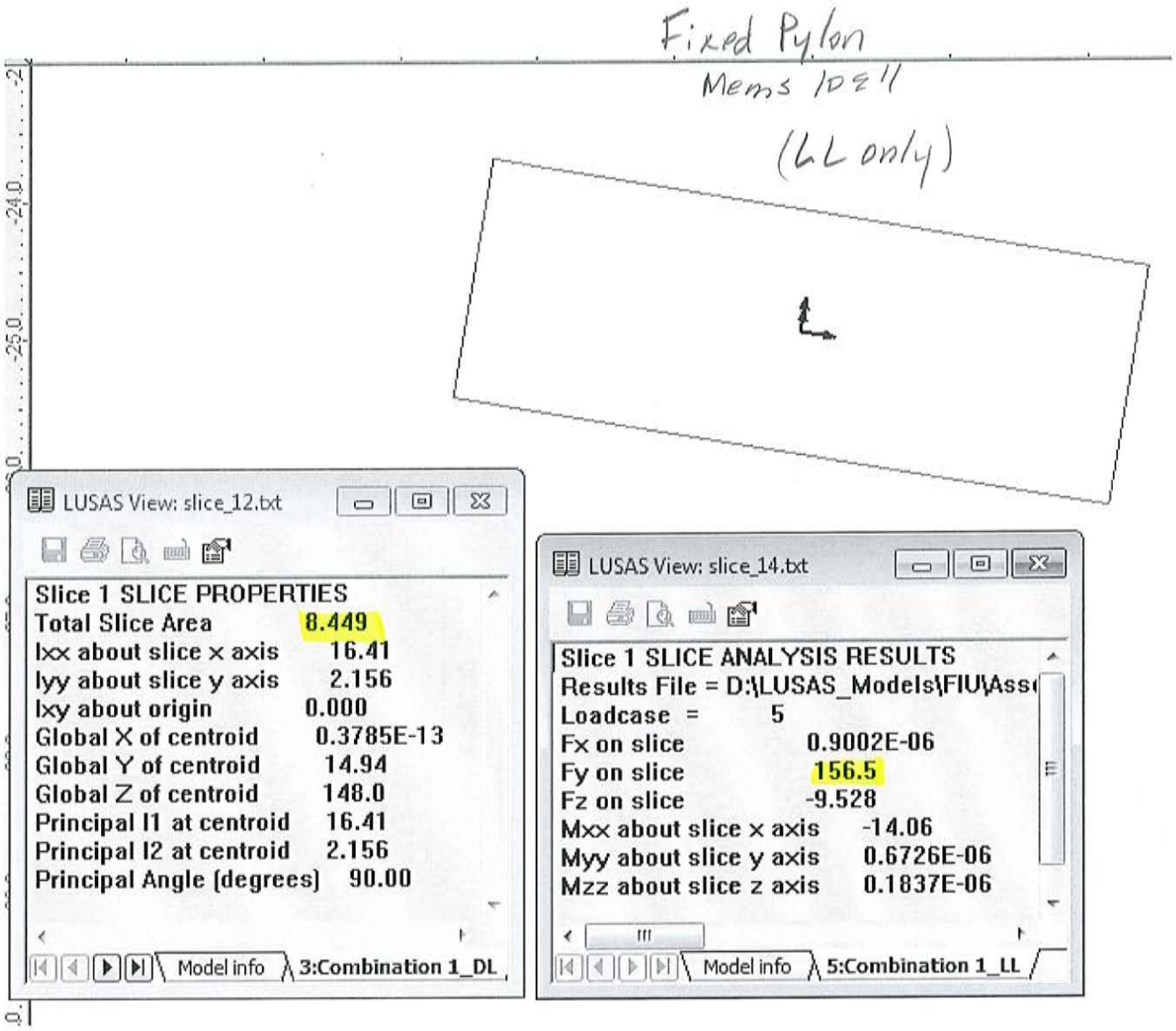
Fixed Pylon
Mems 10 & 11
(LL only)
-24.0
-25.0
LUSAS View: slice_12.txt
Slice 1 SLICE PROPERTIES
Total Slice Area 8.449
Ixx about slice x axis 16.41
Iyy about slice y axis 2.156
Ixy about origin 0.000
Global X of centroid 0.3785E-13
Global Y of centroid 14.94
Global Z of centroid 148.0
Principal I1 at centroid 16.41
Principal I2 at centroid 2.156
Principal Angle (degrees) 90.00
Model info
3:Combination 1_DL
LUSAS View: slice_14.txt
Slice 1 SLICE ANALYSIS RESULTS
Results File = D:\LUSAS_Models\FIU\Ass
Loadcase = 5
Fx on slice 0.9002E-06
Fy on slice 156.5
Fz on slice -9.528
Mxx about slice x axis -14.06
Myy about slice y axis 0.6726E-06
Mzz about slice z axis 0.1837E-06
Model info
5:Combination 1_LL

Fixed Pylon

Mems 10 & 11

(PT only)

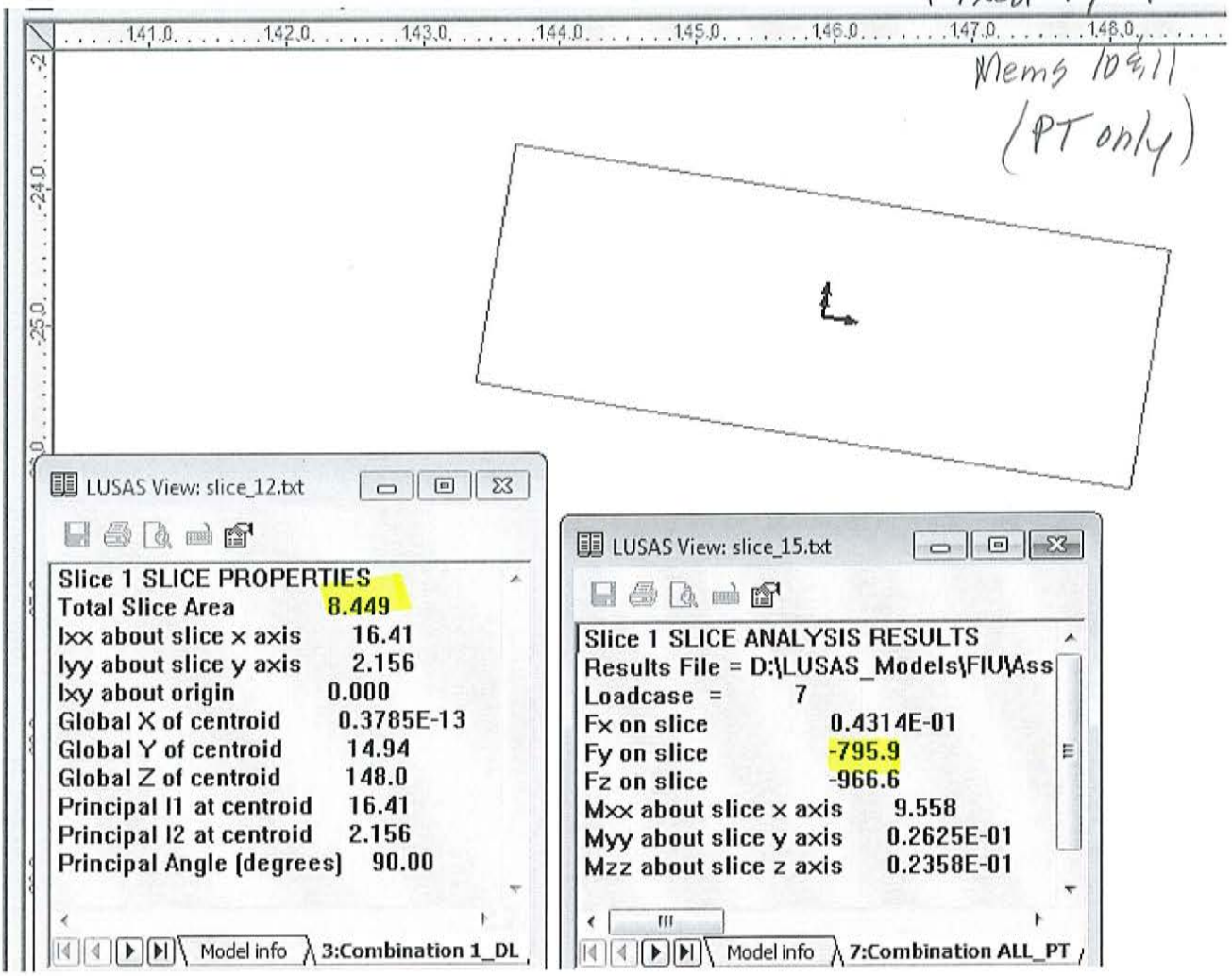

LUSAS View: slice_12.txt

Slice 1 SLICE PROPERTIES	
Total Slice Area	8.449
Ixx about slice x axis	16.41
Iyy about slice y axis	2.156
Ixy about origin	0.000
Global X of centroid	0.3785E-13
Global Y of centroid	14.94
Global Z of centroid	148.0
Principal I1 at centroid	16.41
Principal I2 at centroid	2.156
Principal Angle (degrees)	90.00

Model info | 3:Combination 1_DL

LUSAS View: slice_15.txt

Slice 1 SLICE ANALYSIS RESULTS	
Results File = D:\LUSAS_Models\FIU\Ass	
Loadcase =	7
Fx on slice	0.4314E-01
Fy on slice	-795.9
Fz on slice	-966.6
Mxx about slice x axis	9.558
Myy about slice y axis	0.2625E-01
Mzz about slice z axis	0.2358E-01

Model info | 7:Combination ALL_PT

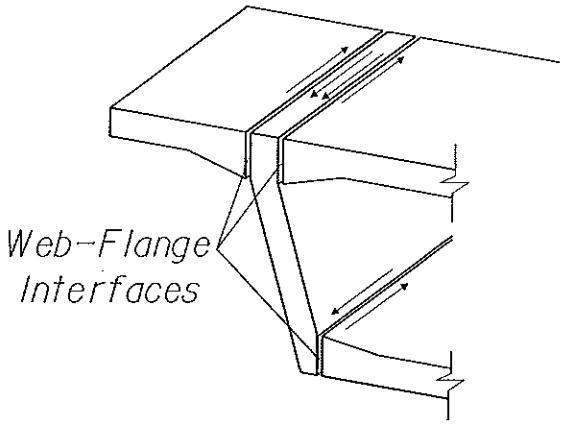

Figure C5.8.4.1-1—Longitudinal Shear Transfer between Flanges and Webs of Box Girder Bridges

Reinforcement for interface shear may consist of single bars, multiple leg stirrups, or welded wire fabric.

All reinforcement present where interface shear transfer is to be considered shall be fully developed on both sides of the interface by embedment, hooks, mechanical methods such as headed studs or welding to develop the design yield stress.

Any reinforcement crossing the interface is subject to the same strain as the designed interface reinforcement. Insufficient anchorage of any reinforcement crossing the interface could result in localized fracture of the surrounding concrete.

When the required interface shear reinforcement in girder/slab design exceeds the area required to satisfy vertical (transverse) shear requirements, additional reinforcement must be provided to satisfy the interface shear requirements. The additional interface shear reinforcement need only extend into the girder a sufficient depth to develop the design yield stress of the reinforcement rather than extending the full depth of the girder as is required for vertical shear reinforcement.

The minimum area of interface shear reinforcement specified in Article 5.8.4.4 shall be satisfied.

The factored interface shear resistance, V_{ri}, shall be taken as:

$$V_{ri} = \phi V_{ni} \qquad (5.8.4.1\text{-}1)$$

and the design shall satisfy:

$$V_{ri} \geq V_{ui} \qquad (5.8.4.1\text{-}2)$$

where:

V_{ni} = nominal interface shear resistance (kip)
V_{ui} = factored interface shear force due to total load based on the applicable strength and extreme event load combinations in Table 3.4.1-1 (kip)
ϕ = resistance factor for shear specified in Article 5.5.4.2.1. In cases where different weight concretes exist on the two sides of an interface, the lower of the two values of ϕ shall be used.

Total load shall include all noncomposite and composite loads.

For the extreme limit state event ϕ may be taken as 1.0.

© 2014 by the American Association of State Highway and Transportation Officials.
All rights reserved. Duplication is a violation of applicable law.

The nominal shear resistance of the interface plane shall be taken as:

$$V_{ni} = cA_{cv} + \mu\,(A_{vf} f_y + P_c) \qquad (5.8.4.1\text{-}3)$$

The nominal shear resistance, V_{ni}, used in the design shall not be greater than the lesser of:

$$V_{ni} \le K_1 f'_c A_{cv}, \text{ or} \qquad (5.8.4.1\text{-}4)$$

$$V_{ni} \le K_2 A_{cv} \qquad (5.8.4.1\text{-}5)$$

in which:

$$A_{cv} = b_{vi} L_{vi} \qquad (5.8.4.1\text{-}6)$$

where:

A_{cv} = area of concrete considered to be engaged in interface shear transfer (in.^{2})

A_{vf} = area of interface shear reinforcement crossing the shear plane within the area A_{cv} (in.^{2})

b_{vi} = interface width considered to be engaged in shear transfer (in.)

L_{vi} = interface length considered to be engaged in shear transfer (in.)

c = cohesion factor specified in Article 5.8.4.3 (ksi)

μ = friction factor specified in Article 5.8.4.3 (dim.)

f_y = yield stress of reinforcement but design value not to exceed 60 (ksi)

P_c = permanent net compressive force normal to the shear plane; if force is tensile, $P_c = 0.0$ (kip)

A pure shear friction model assumes interface shear resistance is directly proportional to the net normal clamping force ($A_{vf}f_y + P_c$), through a friction coefficient (μ). Eq. 5.8.4.1-3 is a modified shear-friction model accounting for a contribution, evident in the experimental data, from cohesion and/or aggregate interlock depending on the nature of the interface under consideration given by the first term. For simplicity, the term "cohesion factor" is used throughout the body of this Article to capture the effects of cohesion and/or aggregate interlock such that Eq. 5.8.4.1-3 is analogous to the vertical shear resistance expression of $V_c + V_s$.

Eq. 5.8.4.1-4 limits V_{ni} to prevent crushing or shearing of aggregate along the shear plane.

Eqs. 5.8.4.1-3 and 5.8.4.1-4 are sufficient, with an appropriate value for K_1, to establish a lower bound for the available experimental data; however, Eq. 5.8.4.1-5 is necessitated by the sparseness of available experimental data beyond the limiting K_2 values provided in Article 5.8.4.3.

The interface shear strength Eqs. 5.8.4.1-3, 5.8.4.1-4, and 5.8.4.1-5 are based on experimental data for normal weight, nonmonolithic concrete strengths ranging from 2.5 ksi to 16.5 ksi; normal weight, monolithic concrete strengths from 3.5 ksi to 18.0 ksi; sand-lightweight concrete strengths from 2.0 ksi to 6.0 ksi; and all-lightweight concrete strengths from 4.0 ksi to 5.2 ksi.

A_{vf} used in Eq. 5.8.4.1-3 is the interface shear reinforcement within the interface area A_{cv}. For a girder/slab interface, the area of the interface shear reinforcement per foot of girder length is calculated by replacing A_{cv} in Eq. 5.8.4.1-3 with $12b_{vi}$ and P_c corresponding to the same one foot of girder length.

In consideration of the use of stay-in-place deck panels, or any other interface details, the Designer shall determine the width of interface, b_{vi}, effectively acting to resist interface shear.

The interface reinforcement is assumed to be stressed to its design yield stress, f_y. However, f_y used in determining the interface shear resistance is limited to 60 ksi because interface shear resistance computed using higher values have overestimated the interface shear resistance experimentally determined in a limited number of tests of pre-cracked specimens.

It is conservative to neglect P_c if it is compressive, however, if included, the value of P_c shall be computed as the force acting over the area, A_{cv}. If P_c is tensile, additional reinforcement is required to resist the net tensile force as specified in Article 5.8.4.2.

© 2014 by the American Association of State Highway and Transportation Officials.
All rights reserved. Duplication is a violation of applicable law.

Recent research (Markowski et al., 2005; Tadros and Girgis, 2006; Badie and Tadros, 2008; Sullivan et al., 2011) has demonstrated that increasing interface shear connector spacing from 24.0 to 48.0 in. has resulted in no deficiency in composite action for the same resistance of shear connectors per foot, and girder and deck configurations. These research projects have independently demonstrated no vertical separation between the girder top and the deck under cyclic or ultimate loads. However, the research did not investigate relatively shallow members; hence, the additional limitation related to the member depth is provided.

As the spacing of connector groups increases, the capacities of the concrete and grout in their vicinity become more critical and need to be carefully verified. This applies to all connected elements at the interface. Eqs. 5.8.4.1-2 and 5.8.4.1-3 are intended to ensure that the capacity of the concrete component of the interface is adequate. Methods to enhance that capacity, if needed, include use of high-strength materials and of localized confinement reinforcement.

5.8.4.3—Cohesion and Friction Factors

The following values shall be taken for cohesion, c, and friction factor, μ:

- For a cast-in-place concrete slab on clean concrete girder surfaces, free of laitance with surface roughened to an amplitude of 0.25 in.

  c = 0.28 ksi
  μ = 1.0
  K_1 = 0.3
  K_2 = 1.8 ksi for normal-weight concrete
  = 1.3 ksi for lightweight concrete

- For normal-weight concrete placed monolithically:

  c = 0.40 ksi
  μ = 1.4
  K_1 = 0.25
  K_2 = 1.5 ksi

- For lightweight concrete placed monolithically, or nonmonolithically, against a clean concrete surface, free of laitance with surface intentionally roughened to an amplitude of 0.25 in.:

  c = 0.24 ksi
  μ = 1.0
  K_1 = 0.25
  K_2 = 1.0 ksi

C5.8.4.3

The values presented provide a lower bound of the substantial body of experimental data available in the literature (Loov and Patnaik, 1994; Patnaik, 1999; Mattock, 2001; Slapkus and Kahn, 2004). Furthermore, the inherent redundancy of girder/slab bridges distinguishes this system from other structural interfaces.

The values presented apply strictly to monolithic concrete. These values are not applicable for situations where a crack may be anticipated to occur at a Service Limit State.

The factors presented provide a lower bound of the experimental data available in the literature (Hofbeck, Ibrahim, and Mattock, 1969; Mattock, Li, and Wang, 1976; Mitchell and Kahn, 2001).

Available experimental data demonstrates that only one modification factor is necessary, when coupled with the resistance factors of Article 5.5.4.2, to accommodate both all-lightweight and sand-lightweight concrete. Note this deviates from earlier specifications that distinguished between all-lightweight and sand-lightweight concrete.

Due to the absence of existing data, the prescribed cohesion and friction factors for nonmonolithic lightweight concrete are accepted as conservative for application to monolithic lightweight concrete.

© 2014 by the American Association of State Highway and Transportation Officials.
All rights reserved. Duplication is a violation of applicable law.

- For normal-weight concrete placed against a clean concrete surface, free of laitance, with surface intentionally roughened to an amplitude of 0.25 in.:

  c = 0.24 ksi
  μ = 1.0
  K_1 = 0.25
  K_2 = 1.5 ksi

- For concrete placed against a clean concrete surface, free of laitance, but not intentionally roughened:

  c = 0.075 ksi
  μ = 0.6
  K_1 = 0.2
  K_2 = 0.8 ksi

- For concrete anchored to as-rolled structural steel by headed studs or by reinforcing bars where all steel in contact with concrete is clean and free of paint:

  c = 0.025 ksi
  μ = 0.7
  K_1 = 0.2
  K_2 = 0.8 ksi

Tighter constraints have been adopted for roughened interfaces, other than cast-in-place slabs on roughened girders, even though available test data does not indicate more severe restrictions are necessary. This is to account for variability in the geometry, loading and lack of redundancy at other interfaces.

For brackets, corbels, and ledges, the cohesion factor, c, shall be taken as 0.0.

Since the effectiveness of cohesion and aggregate interlock along a vertical crack interface is unreliable the cohesion component in Eq. 5.8.4.1-3 is set to 0.0 for brackets, corbels, and ledges.

5.8.4.4—Minimum Area of Interface Shear Reinforcement

C5.8.4.4

Except as provided herein, the cross-sectional area of the interface shear reinforcement, A_{vf}, crossing the interface area, A_{cv}, shall satisfy:

$$A_{vf} \geq \frac{0.05A_{cv}}{f_y} \qquad (5.8.4.4\text{-}1)$$

For a girder/slab interface, the minimum area of interface shear reinforcement per foot of girder length is calculated by replacing A_{cv} in Eq. 5.8.4.4-1 with $12b_{vi}$.

For a cast-in-place concrete slab on clean concrete girder surfaces free of laitance, the following provisions shall apply:

- The minimum interface shear reinforcement, A_{vf}, need not exceed the lesser of the amount determined using Eq. 5.8.4.4-1 and the amount needed to resist $1.33V_{ui}/\phi$ as determined using Eq. 5.8.4.1-3.

Previous editions of these specifications and of the AASHTO Standard Specifications have required a minimum area of reinforcement based on the full interface area; similar to Eq. 5.8.4.4-1, irrespective of the need to mobilize the strength of the full interface area to resist the applied factored interface shear. In 2006, the additional minimum area provisions, applicable only to girder/slab interfaces, were introduced. The intent of these provisions was to eliminate the need for additional interface shear reinforcement due simply to a beam with a wider top flange being utilized in place of a narrower flanged beam.

The additional provision establishes a rational upper bound for the area of interface shear reinforcement required based on the interface shear demand rather than the interface area as stipulated by Eq. 5.8.4.4-1. This

© 2014 by the American Association of State Highway and Transportation Officials.
All rights reserved. Duplication is a violation of applicable law.

FIGG	Project: FIU	Date: 9/15/16	Page: 1 Of
	Project Number:	Designed: WDP	
	Description: HAND CALCULATION EVALUATION	Checked: MF	

OF NODAL ZONES

PRECAST END NODE

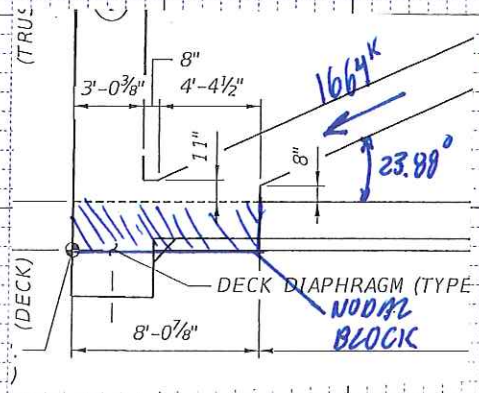

SIMPLE SPAN DL + PT

FORCES FROM EDDY 9/15/16

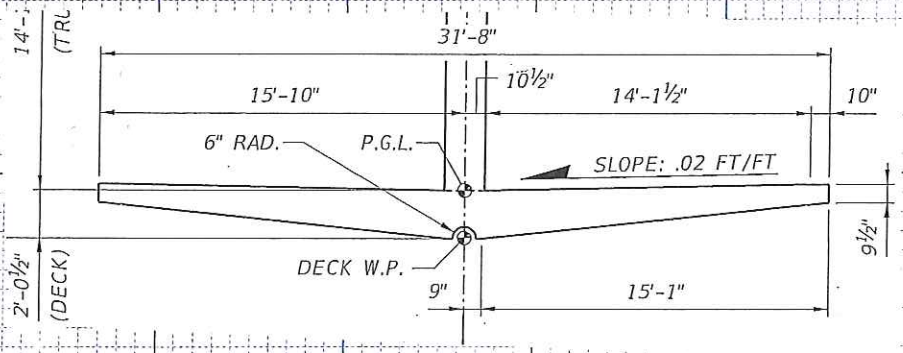

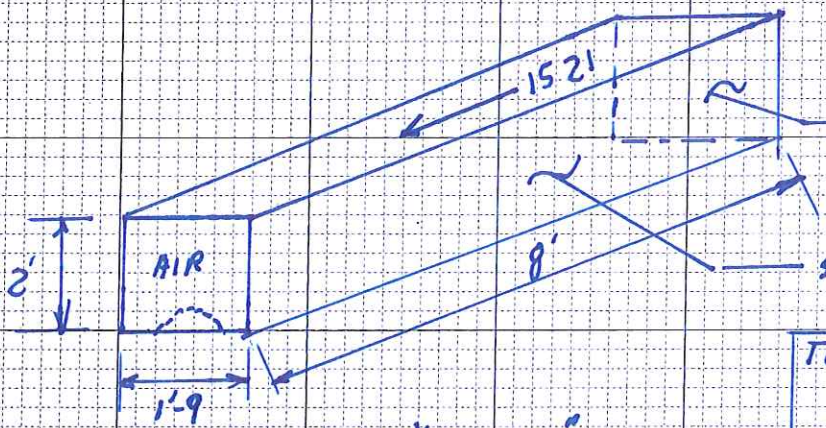

END AREA = 3.5 FT²

SIDE AREA = 16 FT²

TOTAL CONTACT AREA
= (2)(16) + 3.5 = 35.5 FT²

NODAL "BLOCK"

EACH SIDE = 45%
END = 10%
100%

CREATING BRIDGES AS ART®

FIGG	Project: FIU	Date: 9/15/16	Page: 2 Of
	Project Number	Designed: W.D.P	
	Description	Checked: MF	

CONSERVATIVELY NEGLECT PT AS BEING "OUTSIDE" THE NODE

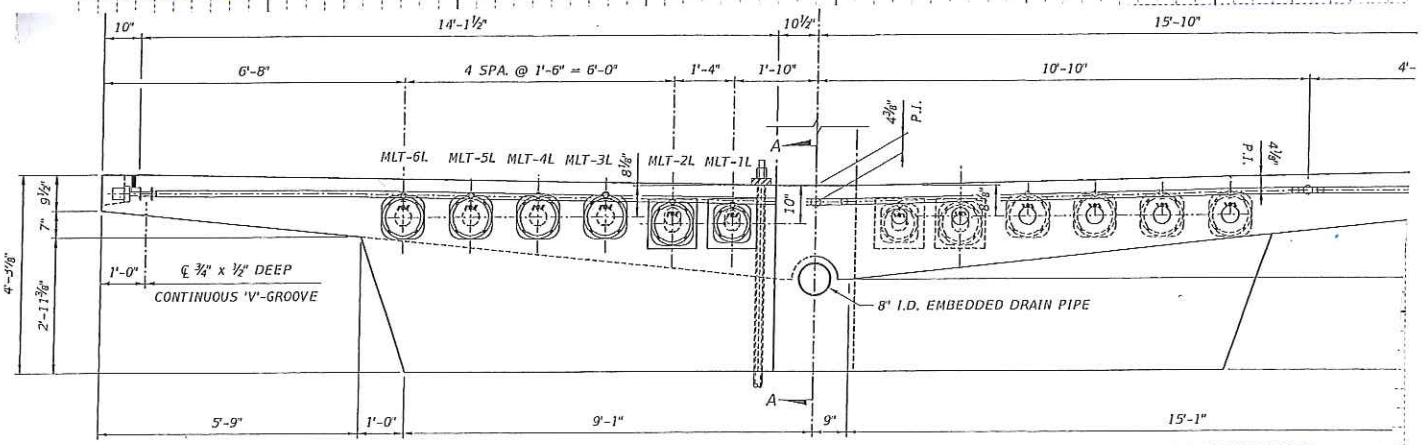

NEGLECTING PT, ALONG THE NODAL BOUNDRIES, WE APPROXIMATE:

SHEAR STRESS = τ = 42.8 KSF = $(0.45)(1521^{K})/(16\ FT^2)$

Δ COMPRESSION = $\Delta\sigma$ = 43.45 KSF = $(0.10)(1521^{K})/3.5\ FT^2$

CREATING BRIDGES AS ART®

LONGITUDINAL STRESS @ END OF NODAL AREA

FROM SHEET B-65

D1 = 12 STR
D2 = 19
D3 = 19
D4 = 19
D5 = 19
D6 = 19
107 STR/HALF

$P_{1/2} \simeq (.63)(270^{k}/_{in^2})(.217\,in^2)(107\,STR) = 3950\ KIPS$

$\frac{1}{2}$ AREA $\simeq$ 9" × 15'-10" × 2' $\Rightarrow A_{1/2} = 21.77\ FT^2$

$\therefore P/A_{PT} \simeq \frac{3950K}{21.77\,FT^2} = 181\ KSF$ (AVG. @ END)

$\therefore (P/A - \Delta\sigma) = (1.86\ KSF - 43.45) =$ **1.38 KSF NET AVG COMPRESSION ✓ OK**

FIGG	Project: FIU	Date: 9/15/16	Page: 4 Of
	Project Number	Designed: WDP	
	Description	Checked: MF	

TRANSVERSE STRESSES @ EDGE OF END NODE

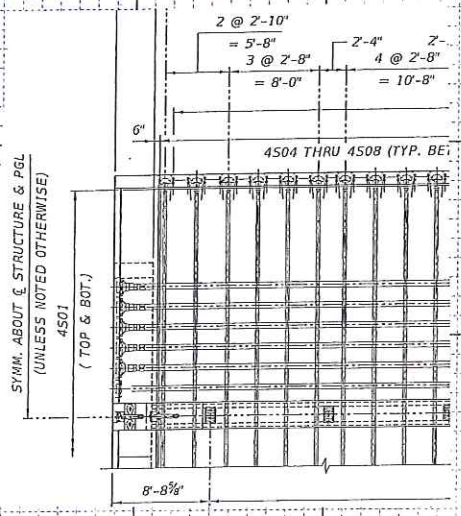

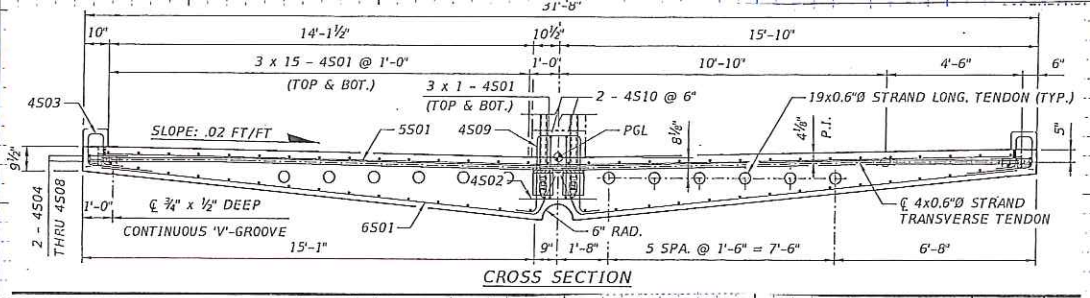

CROSS SECTION

ASSUME 4 STRANDS / 2.833' = 1.41 STR/FT

$$F_{PT} = (1.41)(.217)(270)(.63) = 52^{KIP}/_{FT}$$

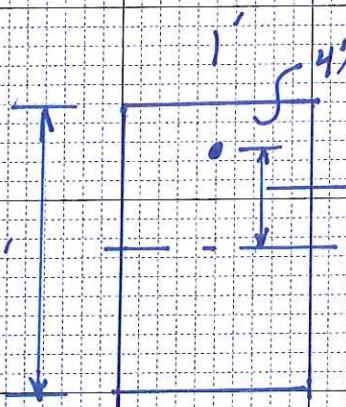

$A = 2 Ft^2$

$S = BH^2/6 = .666 Ft^3$

$M_{PT} = (52^K)(.656) = 34.67^{K-FT}$

$$\sigma_{TOP/PT} = \frac{-52^K}{2FT^2} - \frac{34.67^{K-FT}}{.667} = -78^K/_{FT^2}\ TOP$$

$$\sigma_{BOT/PT} = \frac{-52}{2} + \frac{34.67}{.667} = +26^K/_{FT^2}\ BOT$$

CREATING BRIDGES AS ART®

FIGG	Project	Date 9/15/16	Page 5 of
	Project Number	Designed WDP	
	Description	Checked MF	

TRANSVERSE DL BENDING

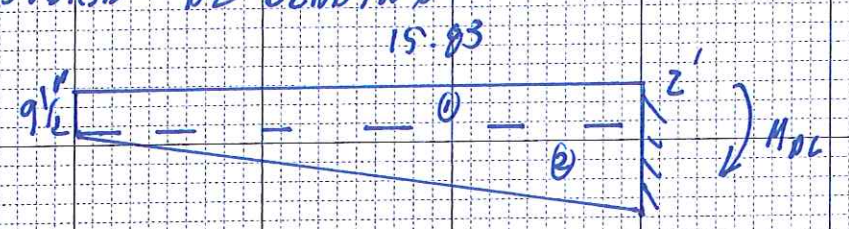

① $(.791 FT)(1')(15.83')\left(\frac{15.83'}{2}\right)(.15^{K}/_{FT^3}) = 14.88^{K\text{-}FT}/_{FT}$

② $\left(\frac{1.209'}{2}\right)(1')(15.83')\left(\frac{15.83'}{3}\right)(.15^{K}/_{FT^3}) = \frac{7.58^{K\text{-}FT}/_{FT}}{22.5^{K\text{-}FT}/_{FT}}$

$\sigma_{TOP/DL} \approx \frac{22.5^{K\text{-}FT}/_{FT}}{.666\,FT^3} = +33.7\ KSF$

$\sigma_{BOT/DL} \approx \frac{-22.5}{.666} = -33.7\ K/FT^2$

SO DL + PT ≈

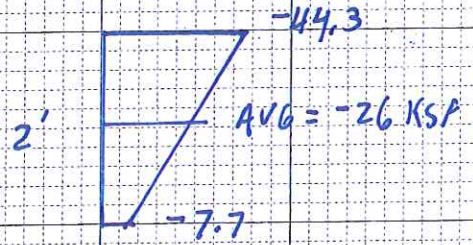

CREATING BRIDGES AS ART®

FIGG	Project	FIU	Date	9/15/16	Page
	Project Number		Designed	WDP	6 of
	Description		Checked	MF	

PRINCIPLE STRESS, ON SIDE @ TOP (HORIZONTAL PLANE) (≈ VERTICAL PLANE)

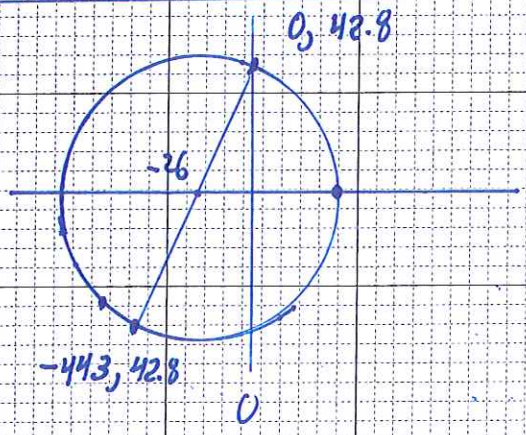

R = 48.2

C = -26

σ_p = +22 KSI

2500 PSI => 12.24 KSI

$1\sqrt{f'_c} \approx 12\text{PSI} = 13.28\ \text{KSI}$

$\therefore \sigma_p \approx 1.7\sqrt{f'_c}$ ✓ OK

PRINCIPLE STRESS ON SIDE @ BOTTOM

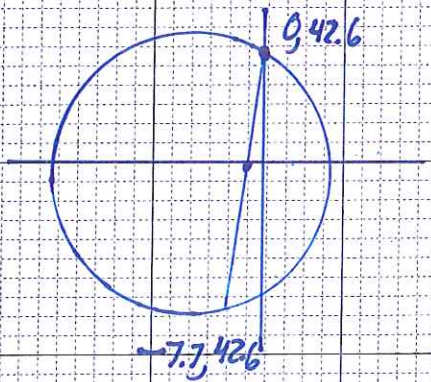

R = 42.77

C = -3.85

$\sigma_{P_{BOT}} \approx +38.92$

$\frac{38.92\ \text{KSI}}{13.28\ \text{KSI}} \approx 2.9\sqrt{f'_c}$ ✓ OK

CREATING BRIDGES AS ART®

FIGG	Project	Date 9/15/16	Page 7 Of
	Project Number	Designed WDP	
	Description	Checked MF	

FIRST INTERIOR NODE

607.8

FORCES FROM EDDY 9/15/16
DL + LONGITUDINAL PT

876.5

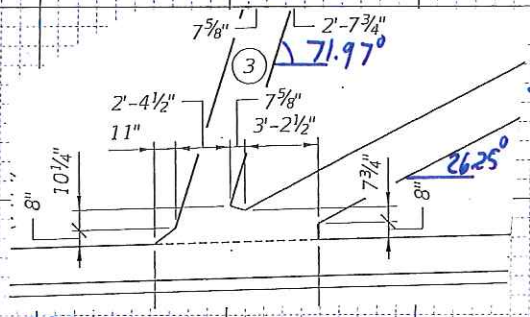

291

188K

397K ?

786K

NET H = 598K

598

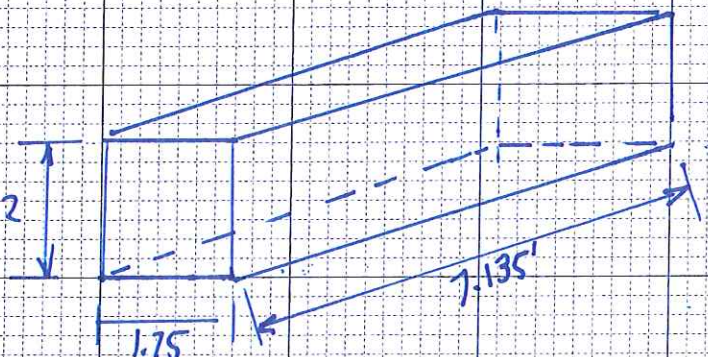

END AREA = 3.5 EACH
SIDE AREA: 14.27 FT² EACH
35.5 FT² TOTAL

EACH END = 10%
EACH SIDE = 40%
100%

SIDE SHEAR STRESS $\approx 16.76\ K/Ft^2 = (.4)(598^K)/14.27 Ft^2$

$\Delta \sigma_{ENDS} \approx +17.1\ KSF$ ONE SIDE
$-17.1\ KSF$ OTHER SIDE
$= (0.1)(598^K)/3.5\ Ft^2$

FROM LARSA MODEL

$\sigma_{TOP} = -159.0\ KSF$ $\sigma_{TOP} = -159.9\ KSF$

NODE

$\sigma_{BOT} = -143.4\ KSF$ $\sigma_{BOT} = -99.1\ KSF$

$-99 + 17 = -82\ KSF$ ✓ dx

FIGG	Project	Date 9/15/16	Page 9 Of
	Project Number	Designed W.D.P	
	Description	Checked MF	

OUTER MOST CANOPY NODE

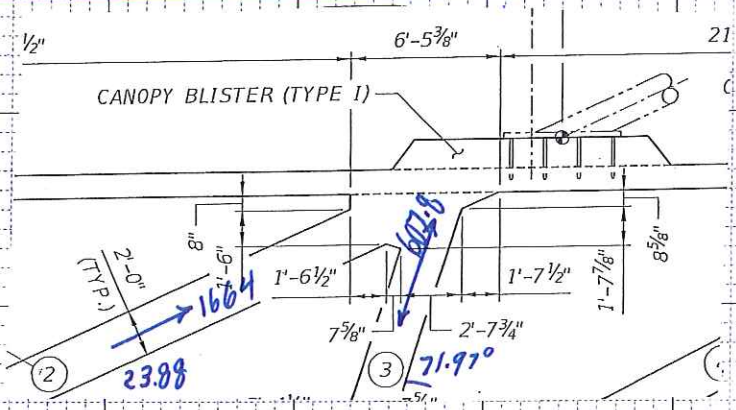

1521

188

NET

1333

THE NODE LENGTH, EXCLUSIVE OF THE CANOPY BLISTER IS 6.45' LONG

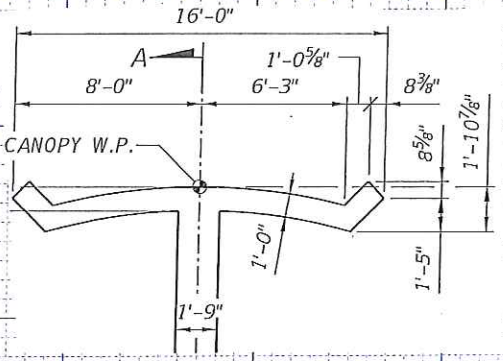

SIDE AREAS = (1')(6.45') = 6.45 FT² = 39% EACH SIDE

END AREAS = (1')(1.75) = 1.75 FT² = 11% EACH END

16.4 FT² TOTAL

≈ SLOT SHEAR STRESS = T = 80.6 KSF = (1333^K)(0.39)/6.45 FT^2

= ≈ END $\Delta\sigma$ STRESS = ±83.8 KSF = (.11)(1333^K)/1.75 FT^2

CANOPY PT

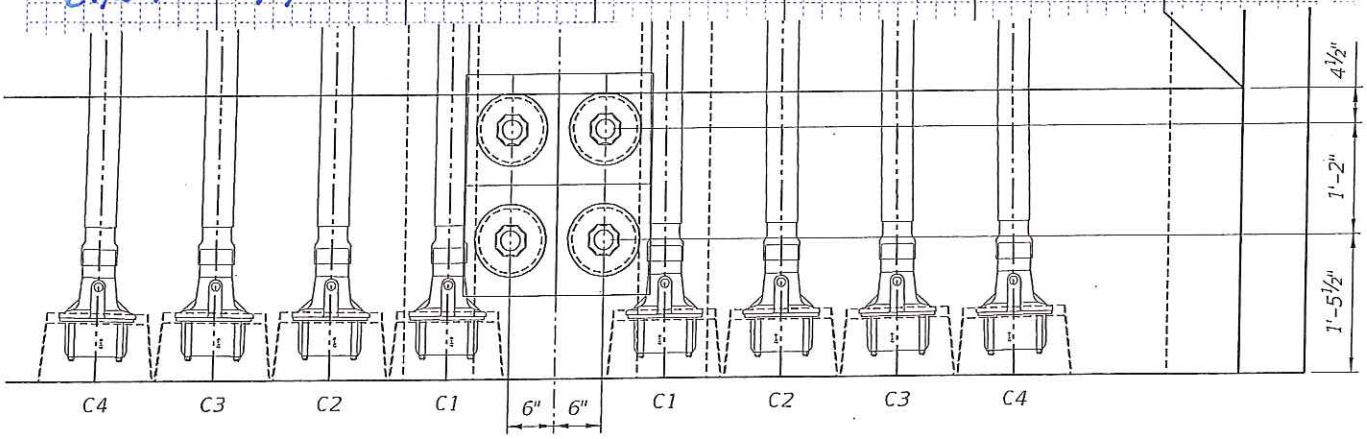

PLAN

C1 → C4 = 12×0.6 (PAGE 18-65)

(4)(12)(.217 in^2)(270)(.63) = 1770^K +/-

½ CANOPY AREA ≈ (1')(8')(1.1 SHAPE FACTOR)

= 8.8 FT^2 +/-

∴ CANOPY AXIAL STRESS FROM PT ≈ 1770^K/8.8

$\sigma_{CANOPY\ PT}$ ≈ 201 K/FT^2 (MAX)

±83.8 ✓ OK @ LOCAL NODE

(*) NEED TO ALSO CHECK (WITH FINAL PT & DAY 10,000 SERVICE LOAD GROUPS

FIGG	Project 9/15/16	Date 9/15/16	Page 11 of
	Project Number	Designed WDP	
	Description	Checked MF	

PRINCIPAL STRESS

w/ σ_x = 201

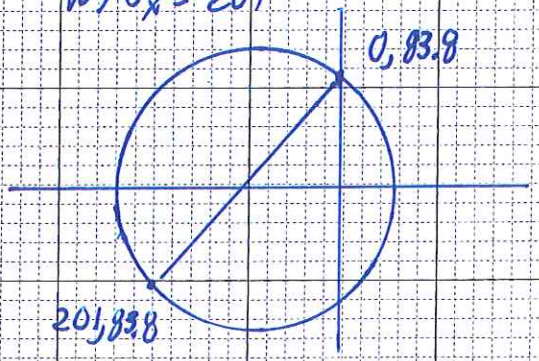

R = 131

C = -100.5

$\sigma_p \simeq 30.5$ KSF $(\simeq 2.25\sqrt{f'_c})$

IF σ_x BECOMES ½ (i.e. 100)

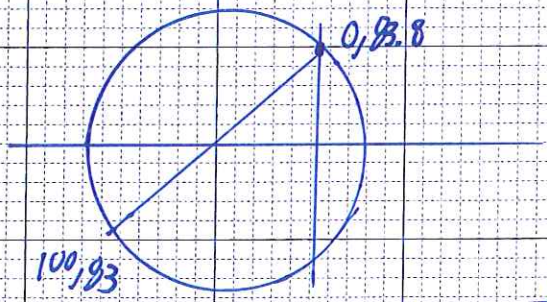

R = 91.58

C = 50

$\sigma_p \simeq 141.6$ KSF $(\simeq 3.5\sqrt{f'_c})$

IF ONLY ½ TOP PT @ END *

VIII. NORTH LANDING OVERLOOK DESIGN

VIII. NORTH LANDING OVERLOOK DESIGN

FIGG	Project FIU	Date 9-1-16	Page 1 Of
	Project Number 2262.03	Designed EDL	
	Description NORTH LANDING	Checked MF	

NORTH LANDING BEAM

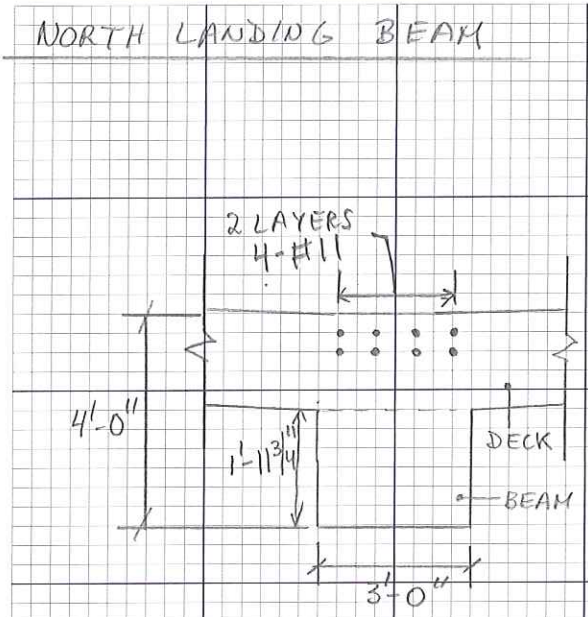

SECTION A-A

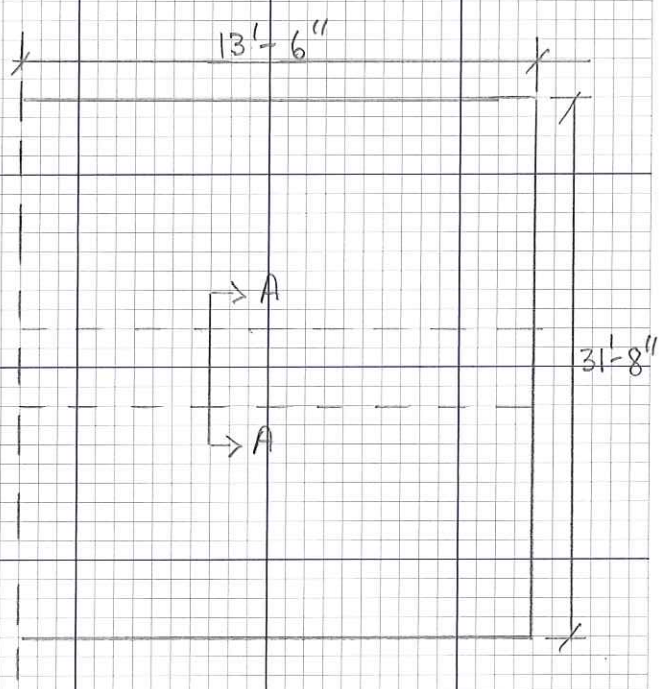

PLAN VIEW

SELF WEIGHT

$A_{DECK} = 45.67\ ft^2$

$W_{DECK} = 45.67\ ft^2 \times 0.15\ k/ft^3 = 6.85\ k/ft$

$A_{BEAM} = 1.98\ ft \times 3\ ft = 5.94\ ft^2$

$W_{BEAM} = 5.94\ ft^2 \times 0.15\ k/ft^3 = 0.891\ k/ft$

PEDESTRIAN RAILING AND FENCE

200 plf (PER SIDE) (CONSERVATIVE)

$W_{FENCE} = 0.2\ k/ft \times 2 = 0.4\ k/ft$ (ASSUMING NO OPENING FOR E.J. - CONSERVATIVE)

(CURB + FENCE - SEE FENCE CALCS)

FENCE @ END OF LANDING = $W_{FENCE} \times L = 125\ lb/ft \times 31\ ft = 3.875\ k$

$W_{DC\_TOTAL} = 6.85 + 0.891 + 0.4 = 8.14\ k/ft$

$P_{DC} = 3.875\ k$

$M_{DC} = \frac{WL^2}{2} + PL = \frac{8.14\ k/ft\,(13.5\ ft)^2}{2} + 3.875\ k\,(13.5\ ft) = 794.16\ k\text{-}ft$

FIGG	Project: FIU	Date: 9-1-16	Page: 2 Of
	Project Number: 2262.03	Designed: EDL	
	Description: NORTH LANDING	Checked: MF	

OVERLAY

6.25 psf (GENERAL NOTES)

$w_{DW} = 0.00625\ K/ft^2 \times 30\ ft = 0.1875\ K/ft$ (30 ft ↑ BRIDGE DECK)

$M_{DW} = \frac{wL^2}{2} = \frac{0.1875\ (13.5\ ft)^2}{2} = 17.09\ K\cdot ft$

LIVE LOAD

90 psf

$w_{LL} = 0.090\ K/ft^2 \times 30\ ft = 2.7\ K/ft$

$M_{LL} = \frac{wL^2}{2} = \frac{2.7\ K/ft\ (13.5\ ft)^2}{2} = 246.04\ K\cdot ft$

$M_u = 1.25 M_{DC} + 1.5 M_{DW} + 1.75 M_{LL}$

$= 1.25(794.16\ K\cdot ft) + 1.5(17.09\ K\cdot ft) + 1.75(246.04\ K\cdot ft)$

$\boxed{M_u = 1{,}448.91\ K\cdot ft}$

$M_s = 1.0 M_{DC} + 1.0 M_{DW} + 1.0 M_{LL}$

$= 1.0(794.16\ K\cdot ft) + 1.0(17.09\ K\cdot ft) + 1.0(246.04\ K\cdot ft)$

$\boxed{M_s = 1{,}057.29\ K\cdot ft}$

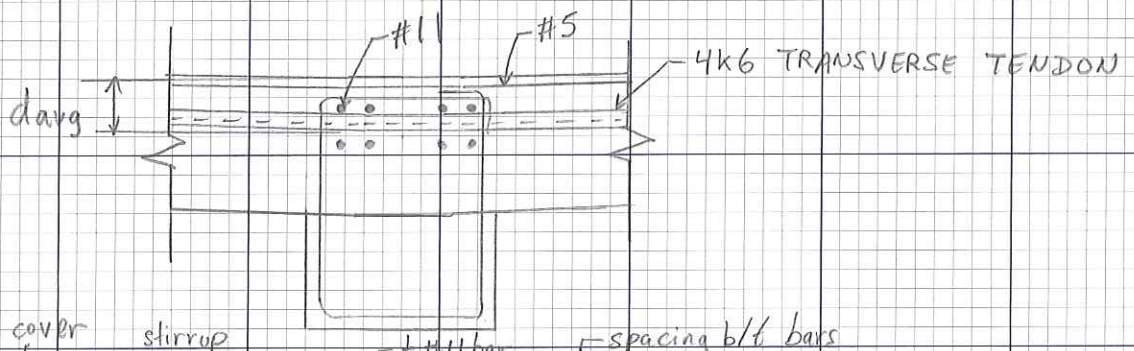

$d_{avg} = 2.25\ in + 0.625\ in + 0.5 \times 1.41\ in + 4\ in/2$

$d_{avg} = 5.58\ in$

CHECK WHERE WE CAN DROP SECOND LAYER OF TOP REINFORCEMENT

SAY 3 FT. FROM DIAPHRAGM END:

$$M_{DC_x} = \frac{wx^2}{2} + \frac{Px}{2} = \frac{8.14\,k/ft\,(10.5\,ft)^2}{2} + 3.875\,k\,(10.5\,ft)$$

$$M_{DC_x} = 489.41\ k\cdot ft$$

$$M_{DW_x} = \frac{wx^2}{2} = \frac{0.1875\,k/ft\,(10.5\,ft)^2}{2}$$

$$M_{DW_x} = 10.34\ k\cdot ft$$

$$M_{LL_x} = \frac{wx^2}{2} = \frac{2.7\,k/ft\,(10.5\,ft)^2}{2}$$

$$M_{LL_x} = 148.84\ k\cdot ft$$

$$M_u = 1.25\,M_{DC_x} + 1.5\,M_{DW_x} + 1.75\,M_{LL_x}$$

$$= 1.25\,(489.41\,k\cdot ft) + 1.5\,(10.34\,k\cdot ft) + 1.75\,(148.84\,k\cdot ft)$$

$$M_u = 887.73\ k\cdot ft$$

$$M_S = 1.0\,(489.41\,k\cdot ft) + 1.0\,(10.34\,k\cdot ft) + 1.0\,(148.84\,k\cdot ft)$$

$$M_S = 648.58\ k\cdot ft$$

FIU Bridge: North Landing Beam Flexure Design

Longitudinal Direction - Top Reinforcement

Input

$M_u := 1449kip \cdot ft$

$M_s := 1058kip \cdot ft$

$h := 4.0ft$

$W_{beam} := 3ft$

$cover_{top} := 2.25in$

$cover_{side} := 2.0in$

$f_c := 8.5ksi$

$f_y := 60ksi$

$E_s := 29000ksi$

$E_c := 4781ksi$

$\phi_f := 0.9$

$$\beta_1 := \begin{cases} 0.85 & \text{if } f_c \le 4ksi \\ \max\left[0.85 - 0.05 \cdot \left(\frac{f_c}{1000psi} - 4\right), 0.65\right] & \text{if } f_c > 4ksi \end{cases}$$

AASHTO 5.7.2.2

$\beta_1 = 0.65$

Strength Design

$BarSize_{top} := 11$ $d_{bar\_top} := 1.41in$ $A_{bar\_top} := 1.56in^2$ Trial bar size

$spacing_{top} := 9in$ Spacing of longitudinal reinforcement

$d_{avg} := 5.58in$ Distance from top of deck to centroid of top reinforcement in beam

$d := h - d_{avg} = 3.54 \cdot ft$ Effective depth of section

$$N_{bar\_top} := trunc\left[\frac{(W_{beam} - d_{bar\_top})}{spacing_{top}} + 1\right] \cdot 2$$

Number of bars on top mat - 2 rows

$N_{bar\_top} = 8$

$A_{s\_prov} := N_{bar\_top} \cdot A_{bar\_top} = 12.48 \cdot in^2$ Area of steel provided

$$a := \frac{A_{s\_prov} \cdot f_y}{0.85 \cdot f_c \cdot W_{beam}}$$

Depth of equivalent compression block

$a = 2.88 \cdot in$

$$\phi M_n := \phi_f \cdot A_{s\_prov} \cdot f_y \cdot \left(d - \frac{a}{2}\right)$$

Factored moment capacity of section

$\phi M_n = 2301.5 \cdot kip \cdot ft$

$Check1 := if(\phi M_n \ge M_u, "OK", "NG")$

$Check1 = "OK"$

Minimum Reinforcement Check (ASSHTO 5.7.3.3.2)

$f_r := 0.24 \cdot \sqrt{f_c \cdot ksi} = 0.7 \cdot ksi$ AASHTO 5.4.2.6

$I := \frac{W_{beam} h^3}{12} = 16.0 \cdot ft^4$ Moment of inertia at section checked

$c := \frac{h}{2} = 2 \cdot ft$

$\gamma_1 := 1.6$ Flexural cracking variability factor for concrete structures other than precast segmental

$\gamma_3 := 0.67$ For A615, Grade 60 Reinforcement

$M_{cr} := \frac{\gamma_3 \cdot \gamma_1 \cdot f_r \cdot I}{c} = 864 \cdot kip \cdot ft$

$Check2 := if\left(\phi M_n \geq \min\left(M_{cr}, 1.33 \cdot M_u\right), "OK", "Add reinforcement"\right)$

Check2 = "OK"

Crack Control Check (AASHTO 5.7.3.4)

$n := \frac{E_s}{E_c} = 6.07$ Modular ratio

$A_s := N_{bar\_top} \cdot A_{bar\_top} = 12.48 \cdot in^2$ Area of steel provided

$\rho := \frac{A_s}{W_{beam} \cdot d} = 0.008$ Reinforcement ratio

$k := \sqrt{(\rho \cdot n)^2 + 2 \cdot \rho \cdot n} - \rho \cdot n = 0.269$

$j := 1 - \frac{k}{3} = 0.91$

$f_{ss} := \frac{M_s}{A_s \cdot j \cdot d} = 26.35 \cdot ksi$ Tensile stress in rebar under service loads

$$d_c := 2in + \frac{d_{bar\_top}}{2} = 2.70 \cdot in$$

Thickness of concrete cover measured from extreme tension fiber to center of closest layer of flexural reinforcement

$$\beta_s := 1 + \frac{d_c}{0.7 \cdot (h - d_c)} = 1.09$$

Exposure_Class := 1

$$\gamma_e := \begin{cases} 1.00 & \text{if Exposure\_Class} = 1 \\ 0.75 & \text{otherwise} \end{cases}$$

Exposure factor

$$\gamma_e = 1.00$$

$$s_{max} := \frac{700 \cdot \gamma_e}{\beta_s \cdot f_{ss} \cdot \frac{in}{kip}} - 2 \cdot d_c = 19.07 \cdot in$$

Maximum spacing of reinforcement for crack control (AASHTO 5.7.3.4-1)

$$Check3 := if(spacing_{top} \le s_{max}, "OK", "NG")$$

Check3 = "OK"

FIU Bridge: North Landing Beam Flexure Design

Longitudinal Direction: Top Reinforcement - One Layer @ 3 ft. from Root of Cantilever

Input

$M_u := 888kip \cdot ft$

$M_s := 649kip \cdot ft$

$h := 3ft + 7in$

$W_{beam} := 3ft$

$cover_{top} := 2.25in$

$cover_{side} := 2.0in$

$f_c := 8.5ksi$

$f_y := 60ksi$

$E_s := 29000ksi$

$E_c := 4781ksi$

$\phi_f := 0.9$

$$\beta_1 := \begin{cases} 0.85 & \text{if } f_c \le 4ksi \\ \max\left[0.85 - 0.05 \cdot \left(\frac{f_c}{1000psi} - 4\right), 0.65\right] & \text{if } f_c > 4ksi \end{cases}$$

AASHTO 5.7.2.2

$\beta_1 = 0.65$

Strength Design

$BarSize_{top} := 11$ $d_{bar\_top} := 1.41in$ $A_{bar\_top} := 1.56in^2$ Trial bar size

$spacing_{top} := 9in$ Spacing of longitudinal reinforcement

$d_{avg} := 3.58in$ Distance from top of deck to centroid of top reinforcement in beam

$d := h - d_{avg} = 3.29 \cdot ft$ Effective depth of section

$$N_{bar\_top} := \text{trunc}\left[\frac{(W_{beam} - d_{bar\_top})}{spacing_{top}} + 1\right]$$ Number of bars on top mat

$N_{bar\_top} = 4$

$A_{s\_prov} := N_{bar\_top} \cdot A_{bar\_top} = 6.24 \cdot in^2$ Area of steel provided

$$a := \frac{A_{s\_prov} \cdot f_y}{0.85 \cdot f_c \cdot W_{beam}}$$ Depth of equivalent compression block

$a = 1.44 \cdot in$

$$\phi M_n := \phi_f \cdot A_{s\_prov} \cdot f_y \cdot \left(d - \frac{a}{2}\right)$$ Factored moment capacity of section

$\phi M_n = 1086.7 \cdot kip \cdot ft$

$Check1 := \text{if}(\phi M_n \ge M_u, \text{"OK"}, \text{"NG"})$

$Check1 = \text{"OK"}$

Minimum Reinforcement Check (ASSHTO 5.7.3.3.2)

$f_r := 0.24 \cdot \sqrt{f_c \cdot ksi} = 0.7 \cdot ksi$ AASHTO 5.4.2.6

$I := \frac{W_{beam} h^3}{12} = 11.5 \cdot ft^4$ Moment of inertia at section checked

$c := \frac{h}{2} = 1.792 \cdot ft$

$\gamma_1 := 1.6$ Flexural cracking variability factor for concrete structures other than precast segmental

$\gamma_3 := 0.67$ For A615, Grade 60 Reinforcement

$M_{cr} := \frac{\gamma_3 \cdot \gamma_1 \cdot f_r \cdot I}{c} = 693 \cdot kip \cdot ft$

$Check2 := if\left(\phi M_n \geq \min\left(M_{cr}, 1.33 \cdot M_u\right), "OK" , "Add reinforcement"\right)$

Check2 = "OK"

Crack Control Check (AASHTO 5.7.3.4)

$n := \frac{E_s}{E_c} = 6.07$ Modular ratio

$A_s := N_{bar\_top} \cdot A_{bar\_top} = 6.24 \cdot in^2$ Area of steel provided

$\rho := \frac{A_s}{W_{beam} \cdot d} = 0.004$ Reinforcement ratio

$k := \sqrt{(\rho \cdot n)^2 + 2 \cdot \rho \cdot n} - \rho \cdot n = 0.206$

$j := 1 - \frac{k}{3} = 0.931$

$f_{ss} := \frac{M_s}{A_s \cdot j \cdot d} = 33.99 \cdot ksi$ Tensile stress in rebar under service loads

$$d_c := 2in + \frac{d_{bar\_top}}{2} = 2.70 \cdot in$$

Thickness of concrete cover measured from extreme tension fiber to center of closest layer of flexural reinforcement

$$\beta_s := 1 + \frac{d_c}{0.7 \cdot (h - d_c)} = 1.1$$

Exposure_Class := 1

$$\gamma_e := \begin{cases} 1.00 & \text{if Exposure\_Class} = 1 \\ 0.75 & \text{otherwise} \end{cases}$$

Exposure factor

$$\gamma_e = 1.00$$

$$s_{max} := \frac{700 \cdot \gamma_e}{\beta_s \cdot f_{ss} \cdot \frac{in}{kip}} - 2 \cdot d_c = 13.38 \cdot in$$

Maximum spacing of reinforcement for crack control (AASHTO 5.7.3.4-1)

$$Check3 := \text{if}(spacing_{top} \le s_{max}, \text{"OK"}, \text{"NG"})$$

Check3 = "OK"

Note: Add development length plus one foot to the second layer of the longitudinal #11 bars passing the 3 ft. distance from the root of the cantilever.

FIGG	Project: FIU	Date:	Page: 1 Of
	Project Number: 2262.03	Designed: EDL	
	Description: NORTH LANDING BEAM	Checked: MF	

SHEAR DESIGN

DC

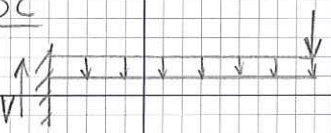

W_{DC} (SW + BARRIERS) = 8.14 K/ft (FROM FLEXURE DESIGN CALCS)

P_{DC} = 3.875K (FENCE @ NORTH END OF LANDING)

$V_{DC} = WL + P_{DC} = 8.14\ K/ft \times 13.5\ ft + 3.875K = \underline{113.77K}$

OVERLAY

W_{DW} = 0.1875 K/ft (FROM FLEXURE DESIGN CALCS)

$V_{DW} = 0.1875\ K/ft \times 13.5\ ft = \underline{2.53K}$

LIVE LOAD

CASE ①: LL ON FULL WIDTH

W_{LL1} = 2.7 K/ft

$V_{LL1} = 2.7\ K/ft \times 13.5\ ft = \underline{36.45\ K}$

CASE ②: LL ON ONLY ONE SIDE OF DECK

$W_{LL2} = 0.090\ K/ft \times \left(\frac{30\ ft}{2}\right) = 1.35\ K/ft$ $\quad V_{LL2} = 1.35\ K/ft \times 13.5\ ft = \underline{18.23K}$

$M_{LL2} = 1.35\ K/ft \times \left(\frac{30\ ft}{4}\right) = \underline{10.125\ K\cdot ft/ft}$ (TORSION)

TORSIONAL EFFECTS SHOULD BE INVESTIGATED WHEN $T_u > 0.25\phi T_{cr}$ PER AASHTO LRFD 5.8.2.1-3.

$$T_{cr} = 0.125\sqrt{f'_c}\,\frac{A_{cp}^2}{P_c}\sqrt{1+\frac{f_{pc}}{0.125\sqrt{f'_c}}} \quad \text{(AASHTO LRFD 5.8.2.1-4)}$$

$A_{cp} = 4' \times 3' = 12\ ft^2 = 1728\ in^2$ $\quad \phi = 0.90$ (AASHTO LRFD 5.5.4.2.1)

$P_c = 2(4') + 2(3') = 14\ ft = 168\ in$

$T_{cr} = 0.125\sqrt{8.5\ ksi}\,\frac{(1728\ in^2)^2}{168\ in} = 6477.35\ k\cdot in = 539.78\ k\cdot ft$

$T_u = 1.75 \times 0.125\ K\cdot ft/ft \times 13.5\ ft = \underline{239.20\ k\cdot ft} > 0.25(0.9)(539.78\ k\cdot ft) = 121.45\ k\cdot ft$

$\therefore$ CONSIDER TORSIONAL EFFECTS

FIGG	Project FIU	Date 9-9-16	Page 2 Of
	Project Number 2262.03	Designed EDL	
	Description NORTH LANDING BEAM SHEAR	Checked MF	

V_u FOR LL CASE 1:

$V_u = 1.25\ V_{DC} + 1.5\ V_{DW} + 1.75\ V_{LL}$

$= 1.25\ (113.77K) + 1.5\ (2.53K) + 1.75\ (36.45K)$

$V_u = 209.8K$ @ ROOT OF CANTILEVER

where:

T_n = nominal torsional resistance specified in Article 5.8.3.6 (kip-in.)
ϕ = resistance factor specified in Article 5.5.4.2

The factored shear resistance, V_r, shall be taken as:

$$V_r = \phi V_n \qquad (5.8.2.1\text{-}2)$$

V_n = nominal shear resistance specified in Article 5.8.3.3 (kip)
ϕ = resistance factor as specified in Article 5.5.4.2

For normal weight concrete, torsional effects shall be investigated where:

$$T_u > 0.25\phi T_{cr} \qquad (5.8.2.1\text{-}3)$$

in which:

$$T_{cr} = 0.125\sqrt{f_c'}\frac{A_{cp}^{\ 2}}{p_c}\sqrt{1+\frac{f_{pc}}{0.125\sqrt{f_c'}}} \qquad (5.8.2.1\text{-}4)$$

where:

T_u = factored torsional moment (kip-in.)

T_{cr} = torsional cracking moment (kip-in.)

A_{cp} = total area enclosed by outside perimeter of concrete cross-section (in.^{2})

p_c = the length of the outside perimeter of the concrete section (in.)

f_{pc} = compressive stress in concrete after prestress losses have occurred either at the centroid of the cross-section resisting transient loads or at the junction of the web and flange where the centroid lies in the flange (ksi)

ϕ = resistance factor specified in Article 5.5.4.2

For cellular structures:

$$\frac{A_{cp}^{\ 2}}{p_c} \le 2A_o b_v \qquad (5.8.2.1\text{-}5)$$

where:

A_o = area enclosed by the shear flow path, including any area of holes therein (in.^{2})

The equivalent factored shear force, V_u, shall be taken equal to:

If the factored torsional moment is less than one-quarter of the factored pure torsional cracking moment, it will cause only a very small reduction in shear capacity or flexural capacity and, hence, can be neglected.

Sections that are designed for live loads using approximate methods of analysis in Article 4.6.2.2 need not be investigated for torsion.

The limit to Eq. 5.8.2.1-4 was added to avoid over-estimating T_{cr} in the case of cellular structures. Eq. 5.8.2.1-4 was derived from a solid section assuming an equivalent thin wall tube. When the actual b_v and $A_{cp}^{\ 2}$ is considered, torsional resistance can be much less. The resulting expression matches that in the current edition of AASHTO's *Guide Specifications for Design and Construction of Segmental Bridges*.

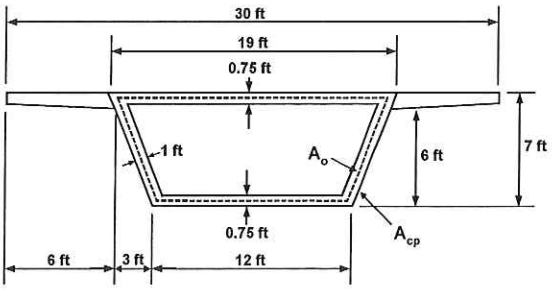

Figure C5.8.2.1-1—Sketch Showing Data Used in Sample Calculation for A_o Shown Below

© 2014 by the American Association of State Highway and Transportation Officials.
All rights reserved. Duplication is a violation of applicable law.

Table 5.5.3.4-1—Constant-Amplitude Fatigue Threshold of Splices

Type of Splice	$(\Delta F)_{TH}$ for greater than 1,000,000 cycles
Grout-filled sleeve, with or without epoxy coated bar	18 ksi
Cold-swaged coupling sleeves without threaded ends and with or without epoxy-coated bar; Integrally-forged coupler with upset NC threads; Steel sleeve with a wedge; One-piece taper-threaded coupler; and Single V-groove direct butt weld	12 ksi
All other types of splices	4 ksi

It was found in NCHRP Project 10-35 that there is substantial variation in the fatigue performance of different types of welds and connectors. However, all types of splices appeared to exhibit a constant amplitude fatigue limit for repetitive loading exceeding about one million cycles. The stress ranges for over one million cycles of loading given in Table 5.5.3.4-1 are based on statistical tolerance limits to constant amplitude staircase test data, such that there is a 95 percent level of confidence that 95 percent of the data would exceed the given values for five million cycles of loading. These values may, therefore, be regarded as a fatigue limit below which fatigue damage is unlikely to occur during the design lifetime of the structure. This is the same basis used to establish the fatigue design provisions for unspliced reinforcing bars in Article 5.5.3.2, which is based on fatigue tests reported in NCHRP Report 164, *Fatigue Strength of High-Yield Reinforcing Bars*.

5.5.4—Strength Limit State

5.5.4.1—General

The strength limit state issues to be considered shall be those of strength and stability.

Factored resistance shall be the product of nominal resistance as determined in accordance with the applicable provisions of Articles 5.6, 5.7, 5.8, 5.9, 5.10, 5.13, and 5.14, unless another limit state is specifically identified, and the resistance factor is as specified in Article 5.5.4.2.

C5.5.4.1

Additional resistance factors are specified in Article 12.5.5 for buried pipes and box structures made of concrete.

5.5.4.2—Resistance Factors

5.5.4.2.1—Conventional Construction

The provisions of Article 5.5.4.2.1 are applicable to nonprestressed reinforcing steels with specified minimum yield strengths up to 100 ksi for elements and connections specified in Article 5.4.3.3.

Resistance factor ϕ shall be taken as:

- For tension-controlled reinforced concrete sections as specified in Article 5.7.2.1 ..... 0.90
- For tension-controlled prestressed concrete sections as specified in Article 5.7.2.1 ..... 1.00
- For shear and torsion:
  - normal weight concrete 0.90
  - lightweight concrete 0.80
- For compression-controlled sections with spirals or ties, as specified in Article 5.7.2.1, except as specified in Articles 5.10.11.3 and 5.10.11.4.1b for Seismic Zones 2, 3, and 4 at the extreme event limit state 0.75
- For bearing on concrete 0.70

C5.5.4.2.1

In applying the resistance factors for tension-controlled and compression-controlled sections, the axial tensions and compressions to be considered are those caused by external forces. Effects of primary prestressing forces are not included.

In editions of and interims to the LRFD Specifications prior to 2005, the provisions specified the magnitude of the resistance factor for cases of axial load or flexure, or both, it terms of the type of loading. For these cases, the ϕ-factor is now determined by the strain conditions at a cross-section, at nominal strength. The background and basis for these provisions are given in Mast (1992) and ACI 318-02.

A lower ϕ-factor is used for compression-controlled sections than is used for tension-controlled sections because compression-controlled sections have less ductility, are more sensitive to variations in concrete strength, and generally occur in members that support larger loaded areas than members with tension-controlled sections.

© 2014 by the American Association of State Highway and Transportation Officials.
All rights reserved. Duplication is a violation of applicable law.

Calculation of Shear Capacity of North Landing Beam:

Considering live load case 1: live load on full deck width

Given:

28 Day Concrete Strength:	$f'_c := 8.5 \cdot ksi$	Beam Concrete Strength
Width of Section:	$b_v := 3 \cdot ft$	
Depth of Section:	$h_{beam} := 4 \cdot ft$	
Depth of Reinforcing Steel:	$d_{e1} := h_{beam} - 2.25 \cdot in - 0.625in - 0.5 \cdot 1.41in - \frac{4.0}{2}in$ $d_{e1} = 42.42 \cdot in$	For #11's
β Factor:	$\beta := 2.0$	AASHTO LRFD 7th Ed., 2015 Interm, Sec. 5.8.3.4.1
θ Angle:	$\theta := 45 \cdot deg$	
Shear Resistance Factor:	$\phi_s := 0.9$	AASHTO LRFD 7th Ed., 2015 Interm, Sec. 5.5.4.2
Design Shear Force (Strength I):	$V_{u1} := 210 \cdot kip$	

Required:

1. Check the shear capacity of the section in the transverse direction.
2. Determine the required shear beam reinforcement.

Solution:

1. Check the shear capacity of the section in the transverse direction.

a. Calculate the nominal shear capacity of the section:

Calculate the effective shear depth:

$$d_{v1} := \max(0.72 \cdot h_{beam}, 0.9 \cdot d_{e1}) \quad d_{v1} = 38.18 \cdot in$$

AASHTO LRFD 7th Ed., 2015 Interm, Sec. 5.8.2.9

Calculate the nominal concrete shear capacity:

$$V_{c1} := \min\left(0.25 \cdot f'_c \cdot b_v \cdot d_{v1}, 0.0316 \cdot \beta \cdot \sqrt{\frac{f'_c}{ksi}} \cdot ksi \cdot b_v \cdot d_{v1}\right)$$

AASHTO LRFD 7th Ed., 2015 Interm, Sec. 5.8.3.3

$$V_{c1} = 253.2 \cdot kip$$

Calculate the nominal concrete shear capacity of the section:

$V_{cr1} := \phi_s \cdot V_{c1}$ $V_{cr1} = 227.9 \cdot kip$

b. Check to determine if reinforcement is required to resist the applied shear force:

$\frac{V_{cr1}}{2} = 113.96 \cdot kip < V_{u1} = 210 \cdot kip$ **Therefore, shear reinforcement must be designed for the section.**

2. Determine the required reinforcement.

$A_{sv} := 0.31 in^2$ (#5 Bar) Initial trial for size of bar

$f_y := 60 ksi$

$V_s := \max\left(\frac{V_{u1}}{\phi_s} - V_{c1}, 0 \cdot kip\right)$ $V_s = 0 \cdot kip$ Required demand for shear reinforcement - AASHTO LRFD 7th Ed., 2015 Interm, Eq. 5.8.3.3-1

$A_{v\_min} := 0.0316 \cdot \sqrt{\frac{f'_c}{ksi}} \cdot ksi \cdot \frac{b_v}{f_y}$ Minimum shear reinforcement - AASHTO LRFD 7th Ed., 2015 Interm, Eq. 5.8.2.5-1

$A_{v\_min} = 0.055 \cdot \frac{in^2}{in}$ Area of shear reinforcement per inch

Considering 2 legs:

$\frac{A_{v\_min}}{2} = 0.028 \cdot \frac{in^2}{in}$

$s_w := \frac{A_{sv}}{\frac{A_{v\_min}}{2}} = 11.22 \cdot in$ Maximum spacing that can be used for trial reinforcement used

Therefore, provide #5@9" stirrups => As = 0.41 in²/ft

V_u FOR LL CASE 2:

$V_u = 1.25\,V_{DC} + 1.5\,V_{DW} + 1.75\,V_{LL}$

$= 1.25(113.77\text{K}) + 1.5(2.53\text{K}) + 1.75(18.23\text{K})$

$V_u = 177.9\text{ K}$

DETERMINE REQ. AREA OF STIRRUPS FOR SHEAR

$$V_s = \frac{V_u}{\phi} - V_c$$

$V_c = \min\left(0.25 f'_c b_v d_v,\ 0.0316\beta\sqrt{f'_c}\, b_v d_v\right)$ (AASHTO LRFD 5.8.3.3)

$V_c = 0.25(8.5\text{ ksi})(36\text{ in})(38.18\text{ in}) = 2920.8\text{ K}$

$V_c = 0.0316(2)\sqrt{8.5\text{ ksi}}\,(36\text{ in})(38.18\text{ in}) = \underline{253.3\text{ K}}$ ← controls

$V_s = \frac{177.9\text{ K}}{0.9} - 253.3\text{ K} = 197.7\text{K} - 253.6\text{K} = -55.6\text{ K} \Rightarrow V_s = 0\text{ K}$

$A_{sv\_min} = 0.0316\sqrt{f'_c}\,\frac{b_v s}{f_y}$ (AASHTO LRFD 5.8.2.5-1)

$\frac{A_{sv}}{s} = 0.0316\sqrt{f'_c}\,\frac{b_v}{f_y} = 0.0316\sqrt{8.5\text{ksi}}\,\frac{(36\text{ in})}{60\text{ksi}} = \underline{0.055\text{ in}^2/\text{in}}$

North Landing Beam
Shear & Torsion
Considering Live Load Case 2: LL on only one side of deck

Input

b (in)	36	
h (in)	48	
$cover_{top}$ (in)	2.25	
$cover_{other}$ (in)	2.0	
$d_{stirrup}$ (in)	0.625	(#5 rebar)
$A_{stirrup}$ (in^2)	0.31	
ϕ	0.90	
V_u (kips)	177.90	
T_u (k*ft)	239.20	
f'c (ksi)	8.5	
f_y (ksi)	60	
d_v (in)	38.18	(From MathCad sheet)

Determine required area of stirrups for torsion

X_o (in)	31.375	
y_o (in)	43.13	
A_{oh} (in^2)	1353.05	
p_h (in)	149.00	
A_o (in^2)	1150.09	(0.85*A_{oh} per ACI 22.7.6.1.1)
θ (°)	45	(For nonprestressed member per ACI 22.7.6.1.2)

$$\emptyset T_n = T_u \qquad T_n = \frac{2A_oA_tf_{yt}}{s}\cot\theta$$ (AAASHTO LRFD 5.8.3.6.2-1)

$$\frac{A_t}{s} = \frac{T_u}{2\emptyset A_o f_{yt}\cot\theta}$$

A_t/s = 0.023 in^2/in/leg

Required area of stirrups for shear

A_v/s = 0.055 in^2/in (From hand calculations-minimum shear reinforcement)

Combined shear and torsioin stirrup requirements

$A_t/s + A_v/2s$ = 0.0506 in^2/in/leg

s = 6.13 in

PROVIDE #5 BARS @ 6 IN FOR SHEAR REINFORCEMENT ← CONTROLS OVER LL CASE 1.

Check maximum stirrup spacing

$$v_u = \frac{V_u}{\emptyset b_v d_v}$$

(Shear concrete stress - AASHTO LRFD 5.8.2.9-1)

v_u = 0.144 ksi

0.125*f'c = 1.063 ksi

$s_{max} = 0.8 d_v \le 24$ in if $v_u \le 0.125 * f'c$ (AASHTO LRFD 5.8.2.7-1)

s_{max} = 24 in

Check for crushing of the concrete compression struts

For solid sections:

$$\sqrt{\left(\frac{V_u}{b_w d}\right)^2 + \left(\frac{T_u p_h}{1.7 A_{oh}^2}\right)^2} \le \emptyset \left(\frac{V_c}{b_w d} + 8\sqrt{f'_c}\right)$$

(ACI EQ. 22.7.7.1a)

d (in) 42.42 (From MathCad sheet)

ϕ 0.75

V_c (kips) 281.59

$$\sqrt{\left(\frac{V_u}{b_w d}\right)^2 + \left(\frac{T_u p_h}{1.7 A_{oh}^2}\right)^2} = \quad 180 \text{ psi}$$

$$\emptyset \left(\frac{V_c}{b_w d} + 8\sqrt{f'_c}\right) = \quad 691 \text{ psi}$$

Check = OK

Linear interpolation may be employed when partial sand replacement is used.

5.8.2.3—Transfer and Development Lengths

The provisions of Article 5.11.4 shall be considered.

C5.8.2.3

The reduced prestress in the transfer length reduces V_p, f_{pc}, and f_{pe}. The transfer length influences the tensile force that can be resisted by the tendons at the inside edge of the bearing area, as described in Article 5.8.3.5.

5.8.2.4—Regions Requiring Transverse Reinforcement

Except for slabs, footings, and culverts, transverse reinforcement shall be provided where:

- $V_u > 0.5\phi\left(V_c + V_p\right)$ (5.8.2.4-1)

  or

- Where consideration of torsion is required by Eq. 5.8.2.1-3 or Eq. 5.8.6.3-1

where:

V_u = factored shear force (kip)

V_c = nominal shear resistance of the concrete (kip)

V_p = component of prestressing force in direction of the shear force; V_p = 0 when the simplified method of 5.8.3.4.3 is used (kip)

ϕ = resistance factor specified in Article 5.5.4.2

For members subjected to flexural shear without torsion, reinforcing steel with specified minimum yield strengths up to 100 ksi may be used for transverse reinforcement for elements and connections as specified in Article 5.4.3.3.

C5.8.2.4

Transverse reinforcement, which usually consists of stirrups, is required in all regions where there is a significant chance of diagonal cracking.

Testing by Shahrooz et al. (2011) has verified the use of transverse reinforcement with specified minimum yield strengths up to 100 ksi for both prestressed and nonprestressed members subjected to flexural shear without torsion for nonseismic applications. No torsional or combined torsion/flexure tests of members using transverse reinforcement with specified minimum yield strengths between 75.0 and 100 ksi have been conducted.

5.8.2.5—Minimum Transverse Reinforcement

Where transverse reinforcement is required, as specified in Article 5.8.2.4, the area of steel shall satisfy:

$$A_v \geq 0.0316\sqrt{f'_c}\,\frac{b_v s}{f_y} \qquad (5.8.2.5\text{-}1)$$

where:

A_v = area of transverse reinforcement within distance s (in.^{2})

b_v = width of web adjusted for the presence of ducts as specified in Article 5.8.2.9 (in.)

s = spacing of transverse reinforcement (in.)

f_y = yield strength of transverse reinforcement (ksi) $\leq$ 100 ksi

C5.8.2.5

A minimum amount of transverse reinforcement is required to restrain the growth of diagonal cracking and to increase the ductility of the section. A larger amount of transverse reinforcement is required to control cracking as the concrete strength is increased.

Additional transverse reinforcement may be required for transverse web bending.

Testing by Shahrooz, et al. (2011) has verified these minimum values of transverse reinforcement for reinforcing steel with specified minimum yield strengths up to 100 ksi for both prestressed and nonprestressed members subjected to flexural shear without torsion for nonseismic applications.

Previous editions of these Specifications had a minimum transverse reinforcement requirement for segmentally-constructed, post-tensioned concrete box

© 2014 by the American Association of State Highway and Transportation Officials.
All rights reserved. Duplication is a violation of applicable law.

- A closed cage of welded wire reinforcement with transverse wires perpendicular to the longitudinal axis of the member, or
- Spirals or hoops.

5.8.2.7—Maximum Spacing of Transverse Reinforcement

The spacing of the transverse reinforcement shall not exceed the maximum permitted spacing, s_{max}, determined as:

- If $v_u < 0.125 f'_c$, then:

$$s_{max} = 0.8 d_v \le 24.0 \text{ in.} \quad (5.8.2.7\text{-}1)$$

- If $v_u \ge 0.125 f'_c$, then:

$$s_{max} = 0.4 d_v \le 12.0 \text{ in.} \quad (5.8.2.7\text{-}2)$$

where:

v_u = the shear stress calculated in accordance with Article 5.8.2.9 (ksi)
d_v = effective shear depth as defined in Article 5.8.2.9 (in.)

For segmental post-tensioned concrete box girder bridges, spacing of closed stirrups or closed ties required to resist shear effects due to torsional moments shall not exceed one-half of the shortest dimension of the cross-section, nor 12.0 in.

5.8.2.8—Design and Detailing Requirements

Transverse reinforcement shall be anchored at both ends in accordance with the provisions of Article 5.11.2.6. For composite flexural members, extension of beam shear reinforcement into the deck slab may be considered when determining if the development and anchorage provisions of Article 5.11.2.6 are satisfied.

For elements and connections specified in Article 5.4.3.3 subjected to flexural shear without torsion, the design yield strength of nonprestressed transverse reinforcement shall be taken as the specified minimum yield strength, but not to exceed 100 ksi. In all other cases, the design yield strength of nonprestressed transverse reinforcement shall be taken equal to the specified yield strength where the latter does not exceed 60.0 ksi. For nonprestressed transverse reinforcement with yield strength in excess of 60.0 ksi, the design yield strength shall be taken as the stress corresponding to a strain of 0.0035, but not to exceed 75.0 ksi. The design yield strength of prestressed transverse reinforcement shall be taken as the effective stress, after allowance for all prestress losses, plus 60.0 ksi, but not greater than f_{py}.

C5.8.2.7

Sections that are highly stressed in shear require more closely spaced reinforcement to provide crack control. Some research (NCHRP Report 579) indicates that in prestressed girders the angle of diagonal cracking can be sufficiently steep that a transverse bar reinforcement spacing of $0.8d_v$ could result in no stirrups intersecting and impeding the opening of a diagonal crack. A limit of $0.6d_v$ may be appropriate in some situations. Reducing the transverse bar reinforcement diameter is another approach taken by some.

These spacing requirements were verified by Shahrooz et al. (2011) for transverse reinforcement with specified minimum yield strengths up to 100 ksi for prestressed and nonprestressed members subjected to flexural shear without torsion for nonseismic applications.

C5.8.2.8

To be effective, the transverse reinforcement should be anchored at each end in a manner that minimizes slip. Fatigue of welded wire reinforcement is not a concern in prestressed members as long as the specially fabricated reinforcement is detailed to have welded joints only in the flanges where shear stress is low.

Some of the provisions of Article 5.8.3 are based on the assumption that the strain in the transverse reinforcement has to attain a value of 0.002 to develop its yield strength. For prestressed tendons, it is the additional strain required to increase the stress above the effective stress caused by the prestress that is of concern. Previous versions limited the design yield strength of nonprestressed transverse reinforcement to 75.0 ksi or a stress corresponding to a strain of 0.0035 to provide control of crack widths at service limit state. Shahrooz et al. (2011) compared the performance of transverse reinforcement with specified yield strengths of 60.0 and 100 ksi in prestressed and nonprestressed members subjected to flexural shear only, under nonseismic conditions. The results do not show any discernable difference between the performance of the

© 2014 by the American Association of State Highway and Transportation Officials.
All rights reserved. Duplication is a violation of applicable law.

Eqs. 5.8.3.5-1 and 5.8.3.5-2 shall be taken to apply to sections not subjected to torsion. Any lack of full development shall be accounted for.

Longitudinal or transverse reinforcing steel, or a combination thereof, with specified minimum yield strengths up to 100 ksi, may be used in elements and connections specified in Article 5.4.3.3.

over the transfer and development length of Article 5.11.4.2 may be assumed.

This provision allows the use of longitudinal and transverse reinforcing steel with specified minimum yield strengths up to 100 ksi for elements and connections specified in Article 5.4.3.3; however, the use of higher strength longitudinal reinforcing steel may not be practical due to longer required development lengths.

5.8.3.6—Sections Subjected to Combined Shear and Torsion

5.8.3.6.1—Transverse Reinforcement

C5.8.3.6.1

The transverse reinforcement shall not be less than the sum of that required for shear, as specified in Article 5.8.3.3, and for the concurrent torsion, as specified in Articles 5.8.2.1 and 5.8.3.6.2.

The shear stresses due to torsion and shear will add on one side of the section and offset on the other side. The transverse reinforcement is designed for the side where the effects are additive.

Usually the loading that causes the highest torsion differs from the loading that causes the highest shear. Although it is sometimes convenient to design for the highest torsion combined with the highest shear, it is only necessary to design for the highest shear and its concurrent torsion, and the highest torsion and its concurrent shear.

5.8.3.6.2—Torsional Resistance

The nominal torsional resistance shall be taken as:

$$T_n = \frac{2A_o A_t f_y \cot\theta}{s} \qquad (5.8.3.6.2\text{-}1)$$

where:

A_o = area enclosed by the shear flow path, including any area of holes therein (in.^{2})
A_t = area of one leg of closed transverse torsion reinforcement in solid members, or total area of transverse torsion reinforcement in the exterior web of cellular members (in.^{2})
θ = angle of crack as determined in accordance with the provisions of Article 5.8.3.4 with the modifications to the expressions for v and V_u herein (degrees)

5.8.3.6.3—Longitudinal Reinforcement

C5.8.3.6.3

The provisions of Article 5.8.3.5 shall apply as amended, herein, to include torsion.

The longitudinal reinforcement in solid sections shall be proportioned to satisfy Eq. 5.8.3.6.3-1:

To account for the fact that on one side of the section the torsional and shear stresses oppose each other, the equivalent tension used in the design equation is taken as the square root of the sum of the squares of the individually calculated tensions in the web.

Torsion addressed in this Article, St. Venant's Torsion, causes an axial tensile force. In a nonprestressed beam, this force is resisted by

© 2014 by the American Association of State Highway and Transportation Officials.
All rights reserved. Duplication is a violation of applicable law.

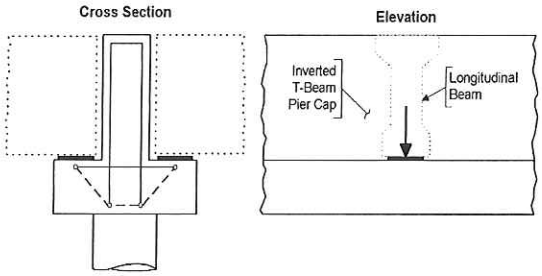

Figure C5.8.3.2-3—Inverted T-Beam Pier Cap

The T-beam pier cap shown in Figure C5.8.3.2-3 acts as a beam ledge and should be designed for the localized effects caused by the concentrated load applied to the T-beam flange. Provisions for beam ledge design are given in Article 5.13.2.5.

Where a beam is loaded on top and its end is not built integrally into the support, all the shear funnels down into the end bearing. Where the beam has a thin web so that the shear stress in the beam exceeds $0.18 f'_c$, there is the possibility of a local diagonal compression or horizontal shear failure along the interface between the web and the lower flange of the beam. Usually the inclusion of additional transverse reinforcement cannot prevent this type of failure and either the section size must be increased or the end of the beam designed using a strut-and-tie model.

If the shear stress at the design section calculated in accordance with Article 5.8.2.9 exceeds $0.18f'_c$ and the beam-type element is not built integrally with the support, its end region shall be designed using the strut-and-tie model specified in Article 5.6.3.

5.8.3.3—Nominal Shear Resistance

The nominal shear resistance, V_n, shall be determined as the lesser of:

$$V_n = V_c + V_s + V_p \quad (5.8.3.3\text{-}1)$$

$$V_n = 0.25 f'_c b_v d_v + V_p \quad (5.8.3.3\text{-}2)$$

in which:

$V_c = 0.0316 \beta \sqrt{f'_c}\, b_v d_v$, if the procedures of Articles 5.8.3.4.1 or 5.8.3.4.2 are used (5.8.3.3-3)

V_c = the lesser of V_{ci} and V_{cw}, if the procedures of Article 5.8.3.4.3 are used

$$V_s = \frac{A_v f_y d_v (\cot\theta + \cot\alpha)\sin\alpha}{s} \quad (5.8.3.3\text{-}4)$$

Where transverse reinforcement consists of a single longitudinal bar or a single group of parallel longitudinal bars bent up at the same distance from the support, the shear resistance V_s provided by these bars shall be determined as:

$$V_s = A_v f_y \sin\alpha \le 0.095 \sqrt{f'_c} b_v d_v \quad (5.8.3.3\text{-}5)$$

C5.8.3.3

The shear resistance of a concrete member may be separated into a component, V_c, that relies on tensile and shear stresses in the concrete, a component, V_s, that relies on tensile stresses in the transverse reinforcement, and a component, V_p, that is the vertical component of the prestressing force.

The expressions for V_c and V_s apply to both prestressed and nonprestressed sections, with the terms β and θ depending on the applied loading and the properties of the section.

The upper limit of V_n, given by Eq. 5.8.3.3-2, is intended to ensure that the concrete in the web of the beam will not crush prior to yield of the transverse reinforcement.

where $\alpha = 90$ degrees, Eq. 5.8.3.3-4 reduces to:

$$V_s = \frac{A_v f_y d_v \cot\theta}{s} \quad (C5.8.3.3\text{-}1)$$

As noted in Article 5.8.2.4 for members subjected to flexural shear without torsion, transverse reinforcement with specified minimum yield strengths up to 100 ksi is permitted for elements and connections specified in Article 5.4.3.3.

© 2014 by the American Association of State Highway and Transportation Officials.
All rights reserved. Duplication is a violation of applicable law.

CODE

COMMENTARY

of N_i can be assumed to be resisted by each of the top and bottom chords as shown. Longitudinal reinforcement with a strength $A_t f_y$ is required to resist the sum of the N_i forces, $\sum N_i$, acting in all of the walls of the tube.

In the derivation of Eq. (22.7.6.1b), axial tension forces are summed along the sides of the area A_o. These sides form a perimeter length p_o approximately equal to the length of the line joining the centers of the bars in the corners of the tube. For ease in calculation, this has been replaced with the perimeter of the closed stirrups, p_h.

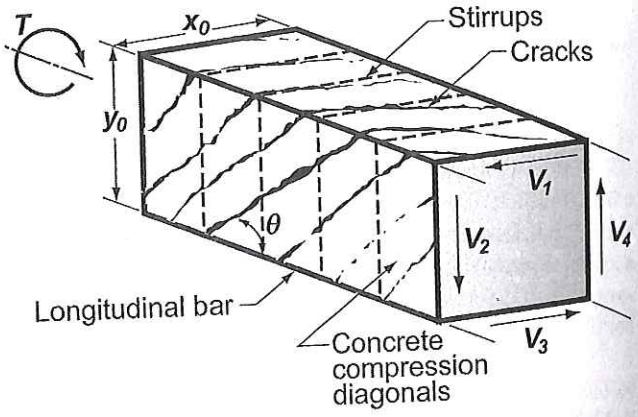

Fig. R22.7.6.1a—Space truss analogy.

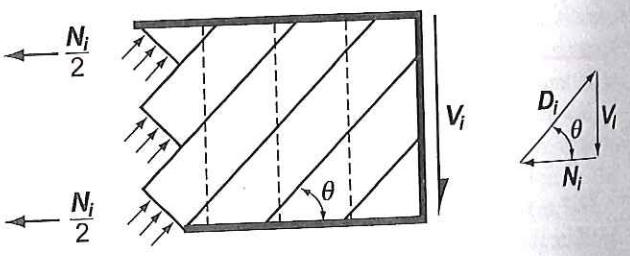

Fig. R22.7.6.1b—Resolution of shear force V_i into diagonal compression force D_i and axial tension force N_i in one wall of tube.

22.7.6.1.1 In Eq. (22.7.6.1a) and (22.7.6.1b), it shall be permitted to take A_o equal to $0.85A_{oh}$.

R22.7.6.1.1 The area A_{oh} is shown in Fig. R22.7.6.1.1 for various cross sections. In an I-, T-, or L-shaped section, A_{oh} is taken as that area enclosed by the outermost legs of interlocking stirrups.

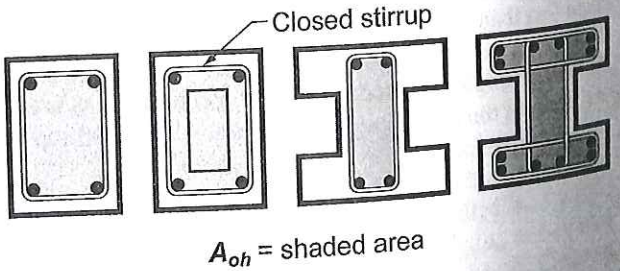

Fig. R22.7.6.1.1—Definition of A_{oh}.

22.7.6.1.2 In Eq. (22.7.6.1a) and (22.7.6.1b), it shall be permitted to take θ equal to (a) or (b):

R22.7.6.1.2 The angle θ can be obtained by analysis (Hsu 1990) or may be taken equal to the values given in

Copyrighted © Material – www.concrete.org

CODE

(a) 45 degrees for nonprestressed members or members with $A_{ps}f_{se} < 0.4(A_{ps}f_{pu} + A_sf_y)$

(b) 37.5 degrees for prestressed members with $A_{ps}f_{se} \geq 0.4(A_{ps}f_{pu} + A_sf_y)$

22.7.7 Cross-sectional limits

22.7.7.1 Cross-sectional dimensions shall be selected such that (a) or (b) is satisfied:

(a) For solid sections

$$\sqrt{\left(\frac{V_u}{b_w d}\right)^2 + \left(\frac{T_u p_h}{1.7A_{oh}^2}\right)^2} \leq \phi\left(\frac{V_c}{b_w d} + 8\sqrt{f_c'}\right) \qquad (22.7.7.1a)$$

(b) For hollow sections

$$\left(\frac{V_u}{b_w d}\right) + \left(\frac{T_u p_h}{1.7A_{oh}^2}\right) \leq \phi\left(\frac{V_c}{b_w d} + 8\sqrt{f_c'}\right) \qquad (22.7.7.1b)$$

22.7.7.1.1 For prestressed members, the value of d used in 22.7.7.1 need not be taken less than $0.8h$.

COMMENTARY

22.7.6.1.2(a) or (b). The same value of θ is required to be used in both Eq. (22.7.6.1a) and (22.7.6.1b). With smaller values of θ, the amount of stirrups required by Eq. (22.7.6.1a) decreases. At the same time, the amount of longitudinal reinforcement required by Eq. (22.7.6.1b) increases.

R22.7.7 Cross-sectional limits

R22.7.7.1 The size of a cross section is limited for two reasons: first, to reduce excessive cracking, and second, to minimize the potential for crushing of the surface concrete due to inclined compressive stresses due to shear and torsion. In Eq. (22.7.7.1a) and (22.7.7.1b), the two terms on the left-hand side are the shear stresses due to shear and torsion. The sum of these stresses may not exceed the stress causing shear cracking plus $8\sqrt{f_c'}$, similar to the limiting strength given in 22.5.1.2 for shear without torsion. The limit is expressed in terms of V_c to allow its use for nonprestressed or prestressed concrete. It was originally derived on the basis of crack control. It is not necessary to check against crushing of the web because crushing occurs at higher shear stresses.

In a hollow section, the shear stresses due to shear and torsion both occur in the walls of the box as shown in Fig. R22.7.7.1(a) and hence are directly additive at Point A as given in Eq. (22.7.7.1b). In a solid section, the shear stresses due to torsion act in the tubular outside section while the shear stresses due to V_u are spread across the width of the section, as shown in Fig. R22.7.7.1(b). For this reason, stresses are combined in Eq. (22.7.7.1a) using the square root of the sum of the squares rather than by direct addition.

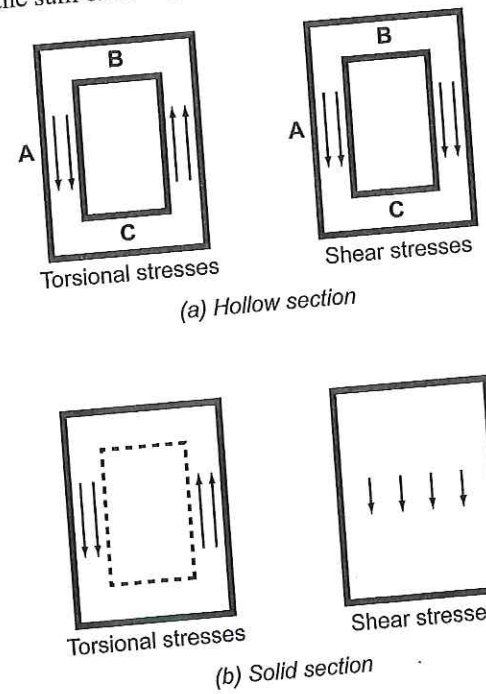

Fig. R22.7.7.1—Addition of torsional and shear stresses.

R22.7.7.1.1 Although the value of d may vary along the span of a prestressed beam, studies (MacGregor and Hanson

American Concrete Institute – Copyrighted © Material – www.concrete.org

IX. FREQUENCY ANALYSIS

IX. FREQUENCY ANALYSIS

FIGG

FREQUENCY MODEL

Friday, February 10, 2017

eleon
FIGG

424 North Calhoun Street
Tallahassee, Florida 32301
Tel: 850.224.7400

TABLE OF CONTENTS

INPUTS	Page#
- INPUT : Material Properties	Page 4
- INPUT : Sections	Page 4
- INPUT : Section Dimensions	Page 5
- INPUT : Joints	Page 6
- INPUT : Members	Page 13
- INPUT : Springs	Page 21
- INPUT : Slave/Masters	Page 21
- INPUT : Tendons	Page 22
- INPUT : More Material Properties	Page 23
- Load Cases	Page 23

Results	Page#
- RESULT : Mode Shapes - Frequencies	Page 32

Graphics View 1

Zoom 1.563X

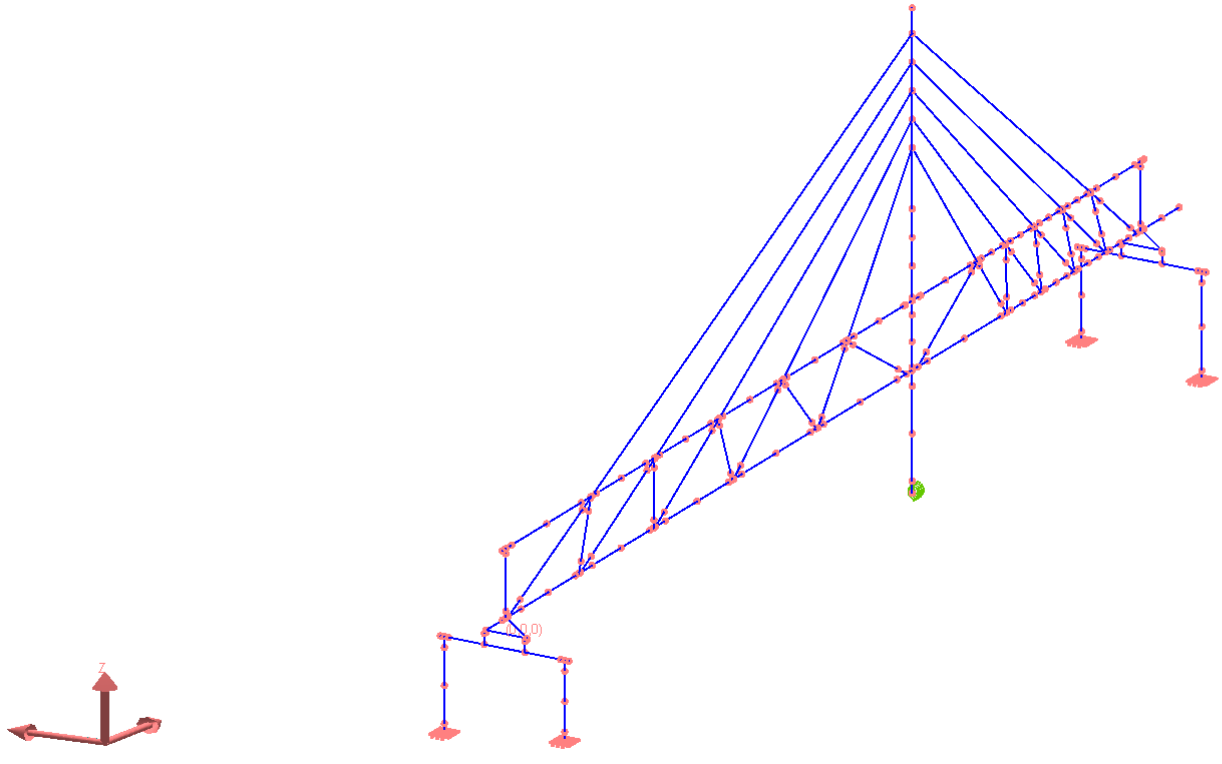

eleon
FIGG
J:\92262_FIU_Pedestrian Bridge\5_Bridge_Design\Calculations\LARSA Models\Frequency\Frequency Model_10.28.2016_Dynamic Loads_No Restraints.lar
Last Analysis Run : 10/28/2016 3:20:49 PM

INPUT : Material Properties

Name	Modulus of Elasticity (kips/ft²)	Poisson Ratio	Shear Modulus (kips/ft²)	Unit Weight (kips/ft³)	Thermal Expansion (1/ °F *10^-6)	Assigned
Rigid	688,462.70	0.2000	286,859.46	0.0000	0.000000	Yes
Steel Pipe	4,176,000.00	0.3000	1,606,153.85	0.4900	6.500000	Yes
Steel PT	4,104,000.00	0.3000	1,578,461.54	0.4900	0.000000	Yes
f'c_5.5	553,799.20	0.2000	230,749.67	0.1500	6.000000	Yes
f'c_8.5ksi	688,462.70	0.2000	286,859.46	0.1500	6.000000	Yes
f'c_8.5ksi_Deck	688,462.70	0.2000	286,859.46	0.1820	6.000000	No
f'c_8.5ksi_Canopy	688,462.70	0.2000	286,859.46	0.1700	6.000000	No

INPUT : Sections

Name	Section Area (ft²)	Shear Area in yy (ft²)	Shear Area in zz (ft²)	Torsion Constant (ft^4)	Inertia Izz (ft^4)	Inertia Iyy (ft^4)	Plastic Modulus Zyy (ft³)	Plastic Modulus Zzz (ft³)	Perimeter (ft)	Material Time-Effect	Ductility	Residual Strength (%)	Assigned
Rigid Link	3,000.0000	3,000.0000	3,000.0000	20,000.0000	70,000.0000	70,000.0000	0.0000	0.0000	0.0000	(NONE)	50.	0.	Yes
Rigid Link 2	3.0000e5	3.0000e5	3.0000e5	2.0000e6	7.0000e6	7.0000e6	0.0000	0.0000	0.0000	(NONE)	50.	0.	No
Stay Pipe	0.4568	0.4117	0.4117	0.1698	0.0849	0.0849	0.0000	0.0000	4.1888	(NONE)	50.	0.	Yes
Concrete Truss_diagonal	3.5000	2.9167	2.9167	1.6798	0.8932	1.1667	0.0000	0.0000	7.5000	(NONE)	50.	0.	Yes
End Diagonal	5.2500	4.3750	4.3750	3.3994	1.3398	3.9375	0.0000	0.0000	9.5000	(NONE)	50.	0.	Yes
Pier 2 Base	60.0000	50.0000	50.0000	449.2800	500.0000	180.0000	0.0000	0.0000	32.0000	(NONE)	50.	0.	Yes
Pier 2 Base Middle	84.5000	70.4167	70.4167	738.8680	1,396.6461	253.5000	0.0000	0.0000	40.1667	(NONE)	50.	0.	Yes
Pier 2 Top	109.0000	90.8333	90.8333	1,033.9740	2,997.7523	327.0000	0.0000	0.0000	48.3333	(NONE)	50.	0.	Yes
End Piers Cap	25.0000	20.8333	20.8333	88.1250	52.0833	52.0833	0.0000	0.0000	20.0000	(NONE)	50.	0.	Yes
End Piers Colum	10.0000	8.3333	8.3333	9.9600	3.3333	20.8333	0.0000	0.0000	14.0000	(NONE)	50.	0.	Yes
Truss Top Chord-16ft wide	16.4607	16.4607	16.4607	0.0000	352.4200	2.6925	0.0000	0.0000	34.8773	(NONE)	0.	0.	Yes
Truss Bottom Chord-31ft 8in_wide	45.6753	45.6753	45.6753	0.0000	2,995.0267	12.4210	0.0000	0.0000	65.7188	(NONE)	0.	0.	Yes
Truss Top Chord - Anchor	20.9746	20.9746	20.9746	13.4192	357.7462	10.0557	0.0000	0.0000	37.0629	(NONE)	0.	0.	No
Pylon Base	28.0000	28.0000	28.0000	117.0724	53.0000	75.6667	0.0000	0.0000	19.6569	(NONE)	0.	0.	Yes
Pylon 1	26.6980	26.6980	26.6980	107.3589	50.2875	65.8047	0.0000	0.0000	19.1361	(NONE)	0.	0.	Yes
Pylon 2	25.4480	25.4480	25.4480	98.2089	47.6833	57.1889	0.0000	0.0000	18.6361	(NONE)	0.	0.	Yes
Pylon 3	24.1980	24.1980	24.1980	89.2593	45.0791	49.3684	0.0000	0.0000	18.1361	(NONE)	0.	0.	Yes
Pylon 4	21.4900	21.4900	21.4900	70.6922	39.4374	34.9674	0.0000	0.0000	17.0528	(NONE)	0.	0.	Yes
Pylon 5	20.2400	20.2400	20.2400	62.5759	36.8332	29.4072	0.0000	0.0000	16.5528	(NONE)	0.	0.	Yes
Pylon 6	18.9900	18.9900	18.9900	54.7958	34.2291	24.4796	0.0000	0.0000	16.0528	(NONE)	0.	0.	Yes

INPUT : Sections

Name	Section Area (ft²)	Shear Area in yy (ft²)	Shear Area in zz (ft²)	Torsion Constant (ft^4)	Inertia Izz (ft^4)	Inertia Iyy (ft^4)	Plastic Modulus Zyy (ft³)	Plastic Modulus Zzz (ft³)	Perimeter (ft)	Material Time-Effect	Ductility	Residual Strength (%)	Assigned
Pylon 7	17.7400	17.7400	17.7400	47.3970	31.6249	20.1454	0.0000	0.0000	15.5528	(NONE)	0.	0.	Yes
Pylon 8	16.4900	16.4900	16.4900	40.4198	29.0207	16.3656	0.0000	0.0000	15.0528	(NONE)	0.	0.	Yes
Pylon Top	15.5000	15.5000	15.5000	35.2216	26.9583	13.7396	0.0000	0.0000	14.6569	(NONE)	0.	0.	Yes

INPUT : Section Dimensions

Name	Shape	Dimension D1	Dimension D2	Dimension D3	Dimension D4	Dimension D5	Dimension D6
Rigid Link	Unspecified						
Rigid Link 2	Unspecified						
Stay Pipe	Hollow Circle	1.3333	0.1198				
Concrete Truss_diagonal	Rectangle	1.7500	2.0000				
End Diagonal	Rectangle	1.7500	3.0000				
Pier 2 Base	Rectangle	10.0000	6.0000				
Pier 2 Base Middle	Rectangle	14.0833	6.0000				
Pier 2 Top	Rectangle	18.1667	6.0000				
End Piers Cap	Rectangle	5.0000	5.0000				
End Piers Colum	Rectangle	2.0000	5.0000				
Truss Top Chord-16ft wide	Parametric						
Truss Bottom Chord-31ft 8in_wide	Parametric						
Truss Top Chord - Anchor	Parametric						
Pylon Base	Parametric						
Pylon 1	Parametric						
Pylon 2	Parametric						
Pylon 3	Parametric						
Pylon 4	Parametric						
Pylon 5	Parametric						
Pylon 6	Parametric						
Pylon 7	Parametric						
Pylon 8	Parametric						
Pylon Top	Parametric						

INPUT : Joints

ID	X (ft)	Y (ft)	Z (ft)	Translation DOF	Rotation DOF	Displacement UCS	Assignment
1	0.0000	0.0000	-1.7350	all free	all free	Global	Yes
2	0.2500	0.0000	-1.7325	all free	all free	Global	Yes
3	1.1250	0.0000	-1.7239	all free	all free	Global	Yes
4	6.5400	0.0000	-1.6696	all free	all free	Global	Yes
5	18.1400	0.0000	-1.5536	all free	all free	Global	Yes
6	29.7300	0.0000	-1.4377	all free	all free	Global	Yes
7	31.2800	0.0000	-1.4222	all free	all free	Global	Yes
8	31.9600	0.0000	-1.4154	all free	all free	Global	Yes
9	36.8800	0.0000	-1.3663	all free	all free	Global	Yes
10	49.2000	0.0000	-1.2430	all free	all free	Global	Yes
11	61.5300	0.0000	-1.1197	all free	all free	Global	Yes
12	63.1900	0.0000	-1.1031	all free	all free	Global	Yes
13	63.8600	0.0000	-1.0964	all free	all free	Global	Yes
14	68.1400	0.0000	-1.0536	all free	all free	Global	Yes
15	81.6300	0.0000	-0.9188	all free	all free	Global	Yes
16	95.1100	0.0000	-0.7839	all free	all free	Global	Yes
17	96.6800	0.0000	-0.7682	all free	all free	Global	Yes
18	97.3500	0.0000	-0.7615	all free	all free	Global	Yes
19	100.7800	0.0000	-0.7272	all free	all free	Global	Yes
20	115.4200	0.0000	-0.5808	all free	all free	Global	Yes
21	130.0600	0.0000	-0.4344	all free	all free	Global	Yes
22	132.6400	0.0000	-0.4086	all free	all free	Global	Yes
23	133.3100	0.0000	-0.4019	all free	all free	Global	Yes
24	135.6500	0.0000	-0.3785	all free	all free	Global	Yes
25	151.3200	0.0000	-0.2218	all free	all free	Global	Yes
26	167.0000	0.0000	-0.0650	all free	all free	Global	Yes
27	171.0200	0.0000	-0.0248	all free	all free	Global	Yes
28	173.5000	0.0000	0.0000	all free	all free	Global	Yes
29	175.9800	0.0000	0.0248	all free	all free	Global	Yes
30	180.0300	0.0000	0.0653	all free	all free	Global	Yes
31	195.7100	0.0000	0.2221	all free	all free	Global	Yes
32	211.3900	0.0000	0.3789	all free	all free	Global	Yes

INPUT : Joints

ID	X (ft)	Y (ft)	Z (ft)	Translation DOF	Rotation DOF	Displacement UCS	Assignment
33	213.6900	0.0000	0.4019	all free	all free	Global	Yes
34	213.9900	0.0000	0.4049	all free	all free	Global	Yes
35	215.6400	0.0000	0.4214	all free	all free	Global	Yes
36	220.7400	0.0000	0.4724	all free	all free	Global	Yes
37	225.8500	0.0000	0.5235	all free	all free	Global	Yes
38	228.4900	0.0000	0.5499	all free	all free	Global	Yes
39	228.7900	0.0000	0.5529	all free	all free	Global	Yes
40	230.3500	0.0000	0.5685	all free	all free	Global	Yes
41	234.9900	0.0000	0.6149	all free	all free	Global	Yes
42	239.6400	0.0000	0.6614	all free	all free	Global	Yes
43	242.5200	0.0000	0.6902	all free	all free	Global	Yes
44	242.8200	0.0000	0.6932	all free	all free	Global	Yes
45	244.3600	0.0000	0.7086	all free	all free	Global	Yes
46	248.6800	0.0000	0.7518	all free	all free	Global	Yes
47	252.9900	0.0000	0.7949	all free	all free	Global	Yes
48	256.0600	0.0000	0.8256	all free	all free	Global	Yes
49	256.3600	0.0000	0.8286	all free	all free	Global	Yes
50	257.9000	0.0000	0.8440	all free	all free	Global	Yes
51	261.9700	0.0000	0.8847	all free	all free	Global	Yes
52	266.0400	0.0000	0.9254	all free	all free	Global	Yes
53	269.2700	0.0000	0.9577	all free	all free	Global	Yes
54	271.0000	0.0000	0.9750	all free	all free	Global	Yes
55	271.5000	0.0000	0.9800	all free	all free	Global	Yes
56	272.5000	0.0000	0.9900	all free	all free	Global	Yes
57	280.0000	0.0000	1.0650	all free	all free	Global	Yes
58	287.5000	0.0000	1.1400	all free	all free	Global	Yes
60	-1.5000	0.0000	-1.7500	all free	all free	Global	Yes
101	0.0000	0.0000	14.0879	all free	all free	Global	Yes
102	2.5000	0.0000	14.1129	all free	all free	Global	Yes
103	17.4500	0.0000	14.2624	all free	all free	Global	Yes
104	32.2083	0.0000	14.4119	all free	all free	Global	Yes
105	36.2900	0.0000	14.4508	all free	all free	Global	Yes
106	36.7200	0.0000	14.4551	all free	all free	Global	Yes
107	38.6563	0.0000	14.4764	all free	all free	Global	Yes

INPUT : Joints

ID	X (ft)	Y (ft)	Z (ft)	Translation DOF	Rotation DOF	Displacement UCS	Assignment
108	49.4100	0.0000	14.5820	all free	all free	Global	Yes
109	59.8125	0.0000	14.6877	all free	all free	Global	Yes
110	63.4600	0.0000	14.7225	all free	all free	Global	Yes
111	63.9000	0.0000	14.7269	all free	all free	Global	Yes
112	65.6875	0.0000	14.7465	all free	all free	Global	Yes
113	76.7900	0.0000	14.8558	all free	all free	Global	Yes
114	87.5729	0.0000	14.9651	all free	all free	Global	Yes
115	90.6800	0.0000	14.9947	all free	all free	Global	Yes
116	91.1400	0.0000	14.9993	all free	all free	Global	Yes
117	92.7292	0.0000	15.0167	all free	all free	Global	Yes
118	104.2800	0.0000	15.1307	all free	all free	Global	Yes
119	115.5625	0.0000	15.2447	all free	all free	Global	Yes
120	117.9500	0.0000	15.2674	all free	all free	Global	Yes
121	118.4500	0.0000	15.2724	all free	all free	Global	Yes
122	120.1354	0.0000	15.2885	all free	all free	Global	Yes
123	132.0000	0.0000	15.4079	all free	all free	Global	Yes
124	143.8646	0.0000	15.5273	all free	all free	Global	Yes
125	145.3400	0.0000	15.5414	all free	all free	Global	Yes
126	145.8800	0.0000	15.5467	all free	all free	Global	Yes
127	148.6875	0.0000	15.5735	all free	all free	Global	Yes
128	159.2000	0.0000	15.6799	all free	all free	Global	Yes
129	169.8300	0.0000	15.7863	all free	all free	Global	Yes
130	170.5000	0.0000	15.7929	all free	all free	Global	Yes
131	173.5000	0.0000	15.8229	all free	all free	Global	Yes
132	176.5000	0.0000	15.8529	all free	all free	Global	Yes
133	177.1700	0.0000	15.8596	all free	all free	Global	Yes
134	187.7900	0.0000	15.9658	all free	all free	Global	Yes
135	198.2708	0.0000	16.0721	all free	all free	Global	Yes
136	201.1300	0.0000	16.0992	all free	all free	Global	Yes
137	201.6600	0.0000	16.1045	all free	all free	Global	Yes
138	203.1042	0.0000	16.1182	all free	all free	Global	Yes
139	207.4200	0.0000	16.1621	all free	all free	Global	Yes
140	212.0313	0.0000	16.2059	all free	all free	Global	Yes
141	213.2600	0.0000	16.2205	all free	all free	Global	Yes

INPUT : Joints

ID	X (ft)	Y (ft)	Z (ft)	Translation DOF	Rotation DOF	Displacement UCS	Assignment
142	213.4700	0.0000	16.2226	all free	all free	Global	Yes
143	215.5104	0.0000	16.2421	all free	all free	Global	Yes
144	219.6500	0.0000	16.2844	all free	all free	Global	Yes
145	224.1458	0.0000	16.3268	all free	all free	Global	Yes
146	225.3600	0.0000	16.3416	all free	all free	Global	Yes
147	225.5600	0.0000	16.3435	all free	all free	Global	Yes
148	227.8021	0.0000	16.3650	all free	all free	Global	Yes
149	231.8200	0.0000	16.4061	all free	all free	Global	Yes
150	236.1771	0.0000	16.4472	all free	all free	Global	Yes
151	237.4400	0.0000	16.4623	all free	all free	Global	Yes
152	237.6300	0.0000	16.4642	all free	all free	Global	Yes
153	240.0313	0.0000	16.4872	all free	all free	Global	Yes
154	243.9300	0.0000	16.5272	all free	all free	Global	Yes
155	248.1979	0.0000	16.5673	all free	all free	Global	Yes
156	249.5000	0.0000	16.5829	all free	all free	Global	Yes
157	249.6800	0.0000	16.5847	all free	all free	Global	Yes
158	252.2083	0.0000	16.6089	all free	all free	Global	Yes
159	260.2969	0.0000	16.6909	all free	all free	Global	Yes
160	268.5000	0.0000	16.7729	all free	all free	Global	Yes
161	271.0000	0.0000	16.7979	all free	all free	Global	Yes
162	272.5000	0.0000	16.8129	all free	all free	Global	Yes
163	-1.5000	0.0000	14.0729	all free	all free	Global	Yes
1001	0.2500	5.0000	-5.4654	all free	all free	Global	Yes
1002	0.2500	5.0000	-5.9654	all free	all free	Global	Yes
1003	-0.5000	5.0000	-8.4654	all free	all free	Global	Yes
1004	-0.5000	13.8333	-8.4654	all free	all free	Global	Yes
1005	-0.5000	14.8333	-8.4654	all free	all free	Global	Yes
1006	-0.5000	15.8333	-8.4654	all free	all free	Global	Yes
1007	-0.5000	14.8333	-10.9654	all free	all free	Global	Yes
1008	-0.5000	14.8333	-19.6113	all free	all free	Global	Yes
1009	-0.5000	14.8333	-28.2571	all free	all free	Global	Yes
1010	-0.5000	14.8333	-29.7571	all fixed	all fixed	Global	Yes
1011	0.2500	-5.0000	-5.4654	all free	all free	Global	Yes
1012	0.2500	-5.0000	-5.9654	all free	all free	Global	Yes

INPUT : Joints

ID	X (ft)	Y (ft)	Z (ft)	Translation DOF	Rotation DOF	Displacement UCS	Assignment
1013	-0.5000	-5.0000	-8.4654	all free	all free	Global	Yes
1014	-0.5000	-13.8333	-8.4654	all free	all free	Global	Yes
1015	-0.5000	-14.8333	-8.4654	all free	all free	Global	Yes
1016	-0.5000	-15.8333	-8.4654	all free	all free	Global	Yes
1017	-0.5000	-14.8333	-10.9654	all free	all free	Global	Yes
1018	-0.5000	-14.8333	-17.8613	all free	all free	Global	Yes
1019	-0.5000	-14.8333	-24.7571	all free	all free	Global	Yes
1020	-0.5000	-14.8333	-26.2571	all fixed	all fixed	Global	Yes
1021	-0.5000	5.0000	-5.9654	all free	all free	Global	Yes
1022	-0.5000	-5.0000	-5.9654	all free	all free	Global	Yes
2001	173.5000	0.0000	-3.5729	all free	all free	Global	Yes
2002	173.5000	0.0000	-14.4167	all free	all free	Global	Yes
2003	173.5000	0.0000	-25.2604	all free	all free	Global	Yes
2004	173.5000	0.0000	-28.0104	all free	all free	Global	Yes
3001	271.5000	5.0000	-2.7304	all free	all free	Global	Yes
3002	271.5000	5.0000	-3.2304	all free	all free	Global	Yes
3003	271.5000	5.0000	-5.7304	all free	all free	Global	Yes
3004	271.5000	13.8333	-5.7304	all free	all free	Global	Yes
3005	271.5000	14.8333	-5.7304	all free	all free	Global	Yes
3006	271.5000	15.8333	-5.7304	all free	all free	Global	Yes
3007	271.5000	14.8333	-8.2304	all free	all free	Global	Yes
3008	271.5000	14.8333	-16.5013	all free	all free	Global	Yes
3009	271.5000	14.8333	-24.7721	all free	all free	Global	Yes
3010	271.5000	14.8333	-26.2721	all fixed	all fixed	Global	Yes
3011	271.5000	-5.0000	-2.7304	all free	all free	Global	Yes
3012	271.5000	-5.0000	-3.2304	all free	all free	Global	Yes
3013	271.5000	-5.0000	-5.7304	all free	all free	Global	Yes
3014	271.5000	-13.8333	-5.7304	all free	all free	Global	Yes
3015	271.5000	-14.8333	-5.7304	all free	all free	Global	Yes
3016	271.5000	-15.8333	-5.7304	all free	all free	Global	Yes
3017	271.5000	-14.8333	-8.2304	all free	all free	Global	Yes
3018	271.5000	-14.8333	-18.2513	all free	all free	Global	Yes
3019	271.5000	-14.8333	-28.2721	all free	all free	Global	Yes
3020	271.5000	-14.8333	-29.7721	all fixed	all fixed	Global	Yes

INPUT : Joints

ID	X (ft)	Y (ft)	Z (ft)	Translation DOF	Rotation DOF	Displacement UCS	Assignment
400	173.5000	0.0000	0.6771	all free	all free	Global	Yes
401	173.5000	0.0000	6.5000	all free	all free	Global	Yes
402	173.5000	0.0000	12.6250	all free	all free	Global	Yes
403	173.5000	0.0000	16.5938	all free	all free	Global	Yes
404	173.5000	0.0000	23.7083	all free	all free	Global	Yes
405	173.5000	0.0000	30.2083	all free	all free	Global	Yes
406	173.5000	0.0000	36.7083	all free	all free	Global	Yes
407	173.5000	0.0000	50.6458	all free	all free	Global	Yes
408	173.5000	0.0000	57.1458	all free	all free	Global	Yes
409	173.5000	0.0000	63.6458	all free	all free	Global	Yes
410	173.5000	0.0000	70.1458	all free	all free	Global	Yes
411	173.5000	0.0000	76.6458	all free	all free	Global	Yes
412	173.5000	0.0000	82.4375	all free	all free	Global	Yes
701	0.0000	0.0000	-0.1517	all free	all free	Global	Yes
702	0.0000	0.0000	12.9525	all free	all free	Global	Yes
703	6.1354	0.0000	0.5463	all free	all free	Global	Yes
704	32.6250	0.0000	12.5983	all free	all free	Global	Yes
705	32.0729	0.0000	1.0567	all free	all free	Global	Yes
706	35.3646	0.0000	11.5150	all free	all free	Global	Yes
707	36.4271	0.0000	0.8379	all free	all free	Global	Yes
708	60.2708	0.0000	12.8900	all free	all free	Global	Yes
709	63.2292	0.0000	0.6782	all free	all free	Global	Yes
710	63.4167	0.0000	12.5011	all free	all free	Global	Yes
711	67.6250	0.0000	1.1192	all free	all free	Global	Yes
712	88.0833	0.0000	13.2025	all free	all free	Global	Yes
713	96.0521	0.0000	0.8796	all free	all free	Global	Yes
714	91.3021	0.0000	13.3379	all free	all free	Global	Yes
715	100.1771	0.0000	1.4108	all free	all free	Global	Yes
716	116.1667	0.0000	13.5775	all free	all free	Global	Yes
717	130.7813	0.0000	1.5567	all free	all free	Global	Yes
718	119.4063	0.0000	13.7025	all free	all free	Global	Yes
719	134.8542	0.0000	1.5463	all free	all free	Global	Yes
720	144.6563	0.0000	14.0046	all free	all free	Global	Yes
721	167.5104	0.0000	2.0879	all free	all free	Global	Yes

INPUT : Joints

ID	X (ft)	Y (ft)	Z (ft)	Translation DOF	Rotation DOF	Displacement UCS	Assignment
722	148.1771	0.0000	13.8067	all free	all free	Global	Yes
727	179.4896	0.0000	2.2292	all free	all free	Global	Yes
728	198.8125	0.0000	14.3229	all free	all free	Global	Yes
729	211.4271	0.0000	3.2292	all free	all free	Global	Yes
730	202.3333	0.0000	14.5938	all free	all free	Global	Yes
731	213.8750	0.0000	3.9063	all free	all free	Global	Yes
732	213.5938	0.0000	12.4375	all free	all free	Global	Yes
733	225.6250	0.0000	3.5000	all free	all free	Global	Yes
734	215.7813	0.0000	13.6250	all free	all free	Global	Yes
735	227.9792	0.0000	4.5313	all free	all free	Global	Yes
736	226.4479	0.0000	12.0104	all free	all free	Global	Yes
737	239.1250	0.0000	3.7813	all free	all free	Global	Yes
738	228.5417	0.0000	13.4375	all free	all free	Global	Yes
739	241.3854	0.0000	5.0417	all free	all free	Global	Yes
740	239.1875	0.0000	11.6979	all free	all free	Global	Yes
741	252.2083	0.0000	4.0521	all free	all free	Global	Yes
742	241.2083	0.0000	13.2813	all free	all free	Global	Yes
743	254.3854	0.0000	5.4688	all free	all free	Global	Yes
744	251.8333	0.0000	11.4792	all free	all free	Global	Yes
745	266.6563	0.0000	3.0208	all free	all free	Global	Yes
746	253.7917	0.0000	13.1875	all free	all free	Global	Yes
747	271.0000	0.0000	2.5792	all free	all free	Global	Yes
748	271.0000	0.0000	15.5479	all free	all free	Global	Yes
801	36.2185	0.0000	14.2233	all free	all free	Global	Yes
802	63.4479	0.0000	14.5046	all free	all free	Global	Yes
803	90.7500	0.0000	14.7650	all free	all free	Global	Yes
804	118.1458	0.0000	15.0463	all free	all free	Global	Yes
805	145.6979	0.0000	15.3171	all free	all free	Global	Yes
806	201.3021	0.0000	15.8854	all free	all free	Global	Yes
807	213.4792	0.0000	16.0000	all free	all free	Global	Yes
808	225.6042	0.0000	16.1250	all free	all free	Global	Yes
809	237.6979	0.0000	16.2396	all free	all free	Global	Yes
810	249.7708	0.0000	16.3646	all free	all free	Global	Yes
2000	173.5000	0.0000	-0.0833	all free	all free	Global	Yes

INPUT : Members

ID	I-Joint	J-Joint	Span	Type	Section at Start	Section at End	Material	Prestress Force (kips)	Length (ft)	Rigid Zone from Start (x/L)	Rigid Zone from End (x/L)	Orientation Angle (deg)	Castin g (day)	Structure Group
1	1	2	-	Beam	Truss Bottom Chord-31ft 8in_wide	(same as start)	f'c_8.5ksi	0.0000	.25	0.0000	0.0000	0.0000	0	Main Span
2	2	3	-	Beam	Truss Bottom Chord-31ft 8in_wide	(same as start)	f'c_8.5ksi	0.0000	.875	0.0000	0.0000	0.0000	0	Main Span
3	3	4	-	Beam	Truss Bottom Chord-31ft 8in_wide	(same as start)	f'c_8.5ksi	0.0000	5.4153	0.0000	0.0000	0.0000	0	Main Span
4	4	5	-	Beam	Truss Bottom Chord-31ft 8in_wide	(same as start)	f'c_8.5ksi	0.0000	11.6006	0.0000	0.0000	0.0000	0	Main Span
5	5	6	-	Beam	Truss Bottom Chord-31ft 8in_wide	(same as start)	f'c_8.5ksi	0.0000	11.5906	0.0000	0.0000	0.0000	0	Main Span
6	6	7	-	Beam	Truss Bottom Chord-31ft 8in_wide	(same as start)	f'c_8.5ksi	0.0000	1.5501	0.0000	0.0000	0.0000	0	Main Span
7	7	8	-	Beam	Truss Bottom Chord-31ft 8in_wide	(same as start)	f'c_8.5ksi	0.0000	.68	0.0000	0.0000	0.0000	0	Main Span
8	8	9	-	Beam	Truss Bottom Chord-31ft 8in_wide	(same as start)	f'c_8.5ksi	0.0000	4.9202	0.0000	0.0000	0.0000	0	Main Span
9	9	10	-	Beam	Truss Bottom Chord-31ft 8in_wide	(same as start)	f'c_8.5ksi	0.0000	12.3206	0.0000	0.0000	0.0000	0	Main Span
10	10	11	-	Beam	Truss Bottom Chord-31ft 8in_wide	(same as start)	f'c_8.5ksi	0.0000	12.3306	0.0000	0.0000	0.0000	0	Main Span
11	11	12	-	Beam	Truss Bottom Chord-31ft 8in_wide	(same as start)	f'c_8.5ksi	0.0000	1.6601	0.0000	0.0000	0.0000	0	Main Span
12	12	13	-	Beam	Truss Bottom Chord-31ft 8in_wide	(same as start)	f'c_8.5ksi	0.0000	.67	0.0000	0.0000	0.0000	0	Main Span
13	13	14	-	Beam	Truss Bottom Chord-31ft 8in_wide	(same as start)	f'c_8.5ksi	0.0000	4.2802	0.0000	0.0000	0.0000	0	Main Span
14	14	15	-	Beam	Truss Bottom Chord-31ft 8in_wide	(same as start)	f'c_8.5ksi	0.0000	13.4907	0.0000	0.0000	0.0000	0	Main Span
15	15	16	-	Beam	Truss Bottom Chord-31ft 8in_wide	(same as start)	f'c_8.5ksi	0.0000	13.4807	0.0000	0.0000	0.0000	0	Main Span
16	16	17	-	Beam	Truss Bottom Chord-31ft 8in_wide	(same as start)	f'c_8.5ksi	0.0000	1.5701	0.0000	0.0000	0.0000	0	Main Span
17	17	18	-	Beam	Truss Bottom Chord-31ft 8in_wide	(same as start)	f'c_8.5ksi	0.0000	.67	0.0000	0.0000	0.0000	0	Main Span
18	18	19	-	Beam	Truss Bottom Chord-31ft 8in_wide	(same as start)	f'c_8.5ksi	0.0000	3.4302	0.0000	0.0000	0.0000	0	Main Span
19	19	20	-	Beam	Truss Bottom Chord-31ft 8in_wide	(same as start)	f'c_8.5ksi	0.0000	14.6407	0.0000	0.0000	0.0000	0	Main Span
20	20	21	-	Beam	Truss Bottom Chord-31ft 8in_wide	(same as start)	f'c_8.5ksi	0.0000	14.6407	0.0000	0.0000	0.0000	0	Main Span
21	21	22	-	Beam	Truss Bottom Chord-31ft 8in_wide	(same as start)	f'c_8.5ksi	0.0000	2.5801	0.0000	0.0000	0.0000	0	Main Span
22	22	23	-	Beam	Truss Bottom Chord-31ft 8in_wide	(same as start)	f'c_8.5ksi	0.0000	.67	0.0000	0.0000	0.0000	0	Main Span
23	23	24	-	Beam	Truss Bottom Chord-31ft 8in_wide	(same as start)	f'c_8.5ksi	0.0000	2.3401	0.0000	0.0000	0.0000	0	Main Span
24	24	25	-	Beam	Truss Bottom Chord-31ft 8in_wide	(same as start)	f'c_8.5ksi	0.0000	15.6708	0.0000	0.0000	0.0000	0	Main Span
25	25	26	-	Beam	Truss Bottom Chord-31ft 8in_wide	(same as start)	f'c_8.5ksi	0.0000	15.6808	0.0000	0.0000	0.0000	0	Main Span
26	26	27	-	Beam	Truss Bottom Chord-31ft 8in_wide	(same as start)	f'c_8.5ksi	0.0000	4.0202	0.0000	0.0000	0.0000	0	Main Span
27	27	28	-	Beam	Truss Bottom Chord-31ft 8in_wide	(same as start)	f'c_8.5ksi	0.0000	2.4801	0.0000	0.0000	0.0000	0	Main Span
28	28	29	-	Beam	Truss Bottom Chord-31ft 8in_wide	(same as start)	f'c_8.5ksi	0.0000	2.4801	0.0000	0.0000	0.0000	90	Back Span
29	29	30	-	Beam	Truss Bottom Chord-31ft 8in_wide	(same as start)	f'c_8.5ksi	0.0000	4.0502	0.0000	0.0000	0.0000	90	Back Span
30	30	31	-	Beam	Truss Bottom Chord-31ft 8in_wide	(same as start)	f'c_8.5ksi	0.0000	15.6808	0.0000	0.0000	0.0000	90	Back Span
31	31	32	-	Beam	Truss Bottom Chord-31ft 8in_wide	(same as start)	f'c_8.5ksi	0.0000	15.6808	0.0000	0.0000	0.0000	90	Back Span
32	32	33	-	Beam	Truss Bottom Chord-31ft 8in_wide	(same as start)	f'c_8.5ksi	0.0000	2.3001	0.0000	0.0000	0.0000	90	Back Span

INPUT : Members

ID	I-Joint	J-Joint	Span	Type	Section at Start	Section at End	Material	Prestress Force (kips)	Length (ft)	Rigid Zone from Start (x/L)	Rigid Zone from End (x/L)	Orientation Angle (deg)	Castin g (day)	Structure Group
33	33	34	-	Beam	Truss Bottom Chord-31ft 8in_wide	(same as start)	f'c_8.5ksi	0.0000	.3	0.0000	0.0000	0.0000	90	Back Span
34	34	35	-	Beam	Truss Bottom Chord-31ft 8in_wide	(same as start)	f'c_8.5ksi	0.0000	1.6501	0.0000	0.0000	0.0000	90	Back Span
35	35	36	-	Beam	Truss Bottom Chord-31ft 8in_wide	(same as start)	f'c_8.5ksi	0.0000	5.1003	0.0000	0.0000	0.0000	90	Back Span
36	36	37	-	Beam	Truss Bottom Chord-31ft 8in_wide	(same as start)	f'c_8.5ksi	0.0000	5.1103	0.0000	0.0000	0.0000	90	Back Span
37	37	38	-	Beam	Truss Bottom Chord-31ft 8in_wide	(same as start)	f'c_8.5ksi	0.0000	2.6401	0.0000	0.0000	0.0000	90	Back Span
38	38	39	-	Beam	Truss Bottom Chord-31ft 8in_wide	(same as start)	f'c_8.5ksi	0.0000	.3	0.0000	0.0000	0.0000	90	Back Span
39	39	40	-	Beam	Truss Bottom Chord-31ft 8in_wide	(same as start)	f'c_8.5ksi	0.0000	1.5601	0.0000	0.0000	0.0000	90	Back Span
40	40	41	-	Beam	Truss Bottom Chord-31ft 8in_wide	(same as start)	f'c_8.5ksi	0.0000	4.6402	0.0000	0.0000	0.0000	90	Back Span
41	41	42	-	Beam	Truss Bottom Chord-31ft 8in_wide	(same as start)	f'c_8.5ksi	0.0000	4.6502	0.0000	0.0000	0.0000	90	Back Span
42	42	43	-	Beam	Truss Bottom Chord-31ft 8in_wide	(same as start)	f'c_8.5ksi	0.0000	2.8801	0.0000	0.0000	0.0000	90	Back Span
43	43	44	-	Beam	Truss Bottom Chord-31ft 8in_wide	(same as start)	f'c_8.5ksi	0.0000	.3	0.0000	0.0000	0.0000	90	Back Span
44	44	45	-	Beam	Truss Bottom Chord-31ft 8in_wide	(same as start)	f'c_8.5ksi	0.0000	1.5401	0.0000	0.0000	0.0000	90	Back Span
45	45	46	-	Beam	Truss Bottom Chord-31ft 8in_wide	(same as start)	f'c_8.5ksi	0.0000	4.3202	0.0000	0.0000	0.0000	90	Back Span
46	46	47	-	Beam	Truss Bottom Chord-31ft 8in_wide	(same as start)	f'c_8.5ksi	0.0000	4.3102	0.0000	0.0000	0.0000	90	Back Span
47	47	48	-	Beam	Truss Bottom Chord-31ft 8in_wide	(same as start)	f'c_8.5ksi	0.0000	3.0702	0.0000	0.0000	0.0000	90	Back Span
48	48	49	-	Beam	Truss Bottom Chord-31ft 8in_wide	(same as start)	f'c_8.5ksi	0.0000	.3	0.0000	0.0000	0.0000	90	Back Span
49	49	50	-	Beam	Truss Bottom Chord-31ft 8in_wide	(same as start)	f'c_8.5ksi	0.0000	1.5401	0.0000	0.0000	0.0000	90	Back Span
50	50	51	-	Beam	Truss Bottom Chord-31ft 8in_wide	(same as start)	f'c_8.5ksi	0.0000	4.0702	0.0000	0.0000	0.0000	90	Back Span
51	51	52	-	Beam	Truss Bottom Chord-31ft 8in_wide	(same as start)	f'c_8.5ksi	0.0000	4.0702	0.0000	0.0000	0.0000	90	Back Span
52	52	53	-	Beam	Truss Bottom Chord-31ft 8in_wide	(same as start)	f'c_8.5ksi	0.0000	3.2302	0.0000	0.0000	0.0000	90	Back Span
53	53	54	-	Beam	Truss Bottom Chord-31ft 8in_wide	(same as start)	f'c_8.5ksi	0.0000	1.7301	0.0000	0.0000	0.0000	90	Back Span
54	54	55	-	Beam	Truss Bottom Chord-31ft 8in_wide	(same as start)	f'c_8.5ksi	0.0000	.5	0.0000	0.0000	0.0000	90	Back Span
55	55	56	-	Beam	Truss Bottom Chord-31ft 8in_wide	(same as start)	f'c_8.5ksi	0.0000	1.	0.0000	0.0000	0.0000	90	Back Span
56	56	57	-	Beam	Truss Bottom Chord-31ft 8in_wide	(same as start)	f'c_8.5ksi	0.0000	7.5004	0.0000	0.0000	0.0000	90	Back Span
57	57	58	-	Beam	Truss Bottom Chord-31ft 8in_wide	(same as start)	f'c_8.5ksi	0.0000	7.5004	0.0000	0.0000	0.0000	90	Back Span
60	60	1	-	Beam	Truss Bottom Chord-31ft 8in_wide	(same as start)	f'c_8.5ksi	0.0000	1.5001	0.0000	0.0000	0.0000	0	Main Span
101	101	102	-	Beam	Truss Top Chord-16ft wide	(same as start)	f'c_8.5ksi	0.0000	2.5001	0.0000	0.0000	0.0000	0	Main Span
102	102	103	-	Beam	Truss Top Chord-16ft wide	(same as start)	f'c_8.5ksi	0.0000	14.9507	0.0000	0.0000	0.0000	0	Main Span
103	103	104	-	Beam	Truss Top Chord-16ft wide	(same as start)	f'c_8.5ksi	0.0000	14.7591	0.0000	0.0000	0.0000	0	Main Span
104	104	105	-	Beam	Truss Top Chord-16ft wide	(same as start)	f'c_8.5ksi	0.0000	4.0819	0.0000	0.0000	0.0000	0	Main Span
105	105	106	-	Beam	Truss Top Chord-16ft wide	(same as start)	f'c_8.5ksi	0.0000	.43	0.0000	0.0000	0.0000	0	Main Span
106	106	107	-	Beam	Truss Top Chord-16ft wide	(same as start)	f'c_8.5ksi	0.0000	1.9364	0.0000	0.0000	0.0000	0	Main Span
107	107	108	-	Beam	Truss Top Chord-16ft wide	(same as start)	f'c_8.5ksi	0.0000	10.7543	0.0000	0.0000	0.0000	0	Main Span
108	108	109	-	Beam	Truss Top Chord-16ft wide	(same as start)	f'c_8.5ksi	0.0000	10.403	0.0000	0.0000	0.0000	0	Main Span

INPUT : Members

ID	I-Joint	J-Joint	Span	Type	Section at Start	Section at End	Material	Prestress Force (kips)	Length (ft)	Rigid Zone from Start (x/L)	Rigid Zone from End (x/L)	Orientation Angle (deg)	Castin g (day)	Structure Group
109	109	110	-	Beam	Truss Top Chord-16ft wide	(same as start)	f'c_8.5ksi	0.0000	3.6477	0.0000	0.0000	0.0000	0	Main Span
110	110	111	-	Beam	Truss Top Chord-16ft wide	(same as start)	f'c_8.5ksi	0.0000	.44	0.0000	0.0000	0.0000	0	Main Span
111	111	112	-	Beam	Truss Top Chord-16ft wide	(same as start)	f'c_8.5ksi	0.0000	1.7876	0.0000	0.0000	0.0000	0	Main Span
112	112	113	-	Beam	Truss Top Chord-16ft wide	(same as start)	f'c_8.5ksi	0.0000	11.103	0.0000	0.0000	0.0000	0	Main Span
113	113	114	-	Beam	Truss Top Chord-16ft wide	(same as start)	f'c_8.5ksi	0.0000	10.7835	0.0000	0.0000	0.0000	0	Main Span
114	114	115	-	Beam	Truss Top Chord-16ft wide	(same as start)	f'c_8.5ksi	0.0000	3.1072	0.0000	0.0000	0.0000	0	Main Span
115	115	116	-	Beam	Truss Top Chord-16ft wide	(same as start)	f'c_8.5ksi	0.0000	.46	0.0000	0.0000	0.0000	0	Main Span
116	116	117	-	Beam	Truss Top Chord-16ft wide	(same as start)	f'c_8.5ksi	0.0000	1.5893	0.0000	0.0000	0.0000	0	Main Span
117	117	118	-	Beam	Truss Top Chord-16ft wide	(same as start)	f'c_8.5ksi	0.0000	11.5514	0.0000	0.0000	0.0000	0	Main Span
118	118	119	-	Beam	Truss Top Chord-16ft wide	(same as start)	f'c_8.5ksi	0.0000	11.2831	0.0000	0.0000	0.0000	0	Main Span
119	119	120	-	Beam	Truss Top Chord-16ft wide	(same as start)	f'c_8.5ksi	0.0000	2.3876	0.0000	0.0000	0.0000	0	Main Span
120	120	121	-	Beam	Truss Top Chord-16ft wide	(same as start)	f'c_8.5ksi	0.0000	.5	0.0000	0.0000	0.0000	0	Main Span
121	121	122	-	Beam	Truss Top Chord-16ft wide	(same as start)	f'c_8.5ksi	0.0000	1.6855	0.0000	0.0000	0.0000	0	Main Span
122	122	123	-	Beam	Truss Top Chord-16ft wide	(same as start)	f'c_8.5ksi	0.0000	11.8652	0.0000	0.0000	0.0000	0	Main Span
123	123	124	-	Beam	Truss Top Chord-16ft wide	(same as start)	f'c_8.5ksi	0.0000	11.8652	0.0000	0.0000	0.0000	0	Main Span
124	124	125	-	Beam	Truss Top Chord-16ft wide	(same as start)	f'c_8.5ksi	0.0000	1.4755	0.0000	0.0000	0.0000	0	Main Span
125	125	126	-	Beam	Truss Top Chord-16ft wide	(same as start)	f'c_8.5ksi	0.0000	.54	0.0000	0.0000	0.0000	0	Main Span
126	126	127	-	Beam	Truss Top Chord-16ft wide	(same as start)	f'c_8.5ksi	0.0000	2.8076	0.0000	0.0000	0.0000	0	Main Span
127	127	128	-	Beam	Truss Top Chord-16ft wide	(same as start)	f'c_8.5ksi	0.0000	10.513	0.0000	0.0000	0.0000	0	Main Span
128	128	129	-	Beam	Truss Top Chord-16ft wide	(same as start)	f'c_8.5ksi	0.0000	10.6305	0.0000	0.0000	0.0000	0	Main Span
129	129	130	-	Beam	Truss Top Chord-16ft wide	(same as start)	f'c_8.5ksi	0.0000	.67	0.0000	0.0000	0.0000	0	Main Span
130	130	131	-	Beam	Truss Top Chord-16ft wide	(same as start)	f'c_8.5ksi	0.0000	3.0001	0.0000	0.0000	0.0000	0	Main Span
131	131	132	-	Beam	Truss Top Chord-16ft wide	(same as start)	f'c_8.5ksi	0.0000	3.0001	0.0000	0.0000	0.0000	90	Back Span
132	132	133	-	Beam	Truss Top Chord-16ft wide	(same as start)	f'c_8.5ksi	0.0000	.67	0.0000	0.0000	0.0000	90	Back Span
133	133	134	-	Beam	Truss Top Chord-16ft wide	(same as start)	f'c_8.5ksi	0.0000	10.6205	0.0000	0.0000	0.0000	90	Back Span
134	134	135	-	Beam	Truss Top Chord-16ft wide	(same as start)	f'c_8.5ksi	0.0000	10.4814	0.0000	0.0000	0.0000	90	Back Span
135	135	136	-	Beam	Truss Top Chord-16ft wide	(same as start)	f'c_8.5ksi	0.0000	2.8593	0.0000	0.0000	0.0000	90	Back Span
136	136	137	-	Beam	Truss Top Chord-16ft wide	(same as start)	f'c_8.5ksi	0.0000	.53	0.0000	0.0000	0.0000	90	Back Span
137	137	138	-	Beam	Truss Top Chord-16ft wide	(same as start)	f'c_8.5ksi	0.0000	1.4442	0.0000	0.0000	0.0000	90	Back Span
138	138	139	-	Beam	Truss Top Chord-16ft wide	(same as start)	f'c_8.5ksi	0.0000	4.3161	0.0000	0.0000	0.0000	90	Back Span
139	139	140	-	Beam	Truss Top Chord-16ft wide	(same as start)	f'c_8.5ksi	0.0000	4.6115	0.0000	0.0000	0.0000	90	Back Span
140	140	141	-	Beam	Truss Top Chord-16ft wide	(same as start)	f'c_8.5ksi	0.0000	1.2288	0.0000	0.0000	0.0000	90	Back Span
141	141	142	-	Beam	Truss Top Chord-16ft wide	(same as start)	f'c_8.5ksi	0.0000	.21	0.0000	0.0000	0.0000	90	Back Span
142	142	143	-	Beam	Truss Top Chord-16ft wide	(same as start)	f'c_8.5ksi	0.0000	2.0405	0.0000	0.0000	0.0000	90	Back Span

INPUT : Members

ID	I-Joint	J-Joint	Span	Type	Section at Start	Section at End	Material	Prestress Force (kips)	Length (ft)	Rigid Zone from Start (x/L)	Rigid Zone from End (x/L)	Orientation Angle (deg)	Castin g (day)	Structure Group
143	143	144	-	Beam	Truss Top Chord-16ft wide	(same as start)	f'c_8.5ksi	0.0000	4.1398	0.0000	0.0000	0.0000	90	Back Span
144	144	145	-	Beam	Truss Top Chord-16ft wide	(same as start)	f'c_8.5ksi	0.0000	4.496	0.0000	0.0000	0.0000	90	Back Span
145	145	146	-	Beam	Truss Top Chord-16ft wide	(same as start)	f'c_8.5ksi	0.0000	1.2143	0.0000	0.0000	0.0000	90	Back Span
146	146	147	-	Beam	Truss Top Chord-16ft wide	(same as start)	f'c_8.5ksi	0.0000	.2	0.0000	0.0000	0.0000	90	Back Span
147	147	148	-	Beam	Truss Top Chord-16ft wide	(same as start)	f'c_8.5ksi	0.0000	2.2422	0.0000	0.0000	0.0000	90	Back Span
148	148	149	-	Beam	Truss Top Chord-16ft wide	(same as start)	f'c_8.5ksi	0.0000	4.0181	0.0000	0.0000	0.0000	90	Back Span
149	149	150	-	Beam	Truss Top Chord-16ft wide	(same as start)	f'c_8.5ksi	0.0000	4.3573	0.0000	0.0000	0.0000	90	Back Span
150	150	151	-	Beam	Truss Top Chord-16ft wide	(same as start)	f'c_8.5ksi	0.0000	1.263	0.0000	0.0000	0.0000	90	Back Span
151	151	152	-	Beam	Truss Top Chord-16ft wide	(same as start)	f'c_8.5ksi	0.0000	.19	0.0000	0.0000	0.0000	90	Back Span
152	152	153	-	Beam	Truss Top Chord-16ft wide	(same as start)	f'c_8.5ksi	0.0000	2.4014	0.0000	0.0000	0.0000	90	Back Span
153	153	154	-	Beam	Truss Top Chord-16ft wide	(same as start)	f'c_8.5ksi	0.0000	3.899	0.0000	0.0000	0.0000	90	Back Span
154	154	155	-	Beam	Truss Top Chord-16ft wide	(same as start)	f'c_8.5ksi	0.0000	4.2681	0.0000	0.0000	0.0000	90	Back Span
155	155	156	-	Beam	Truss Top Chord-16ft wide	(same as start)	f'c_8.5ksi	0.0000	1.3022	0.0000	0.0000	0.0000	90	Back Span
156	156	157	-	Beam	Truss Top Chord-16ft wide	(same as start)	f'c_8.5ksi	0.0000	.18	0.0000	0.0000	0.0000	90	Back Span
157	157	158	-	Beam	Truss Top Chord-16ft wide	(same as start)	f'c_8.5ksi	0.0000	2.5284	0.0000	0.0000	0.0000	90	Back Span
158	158	159	-	Beam	Truss Top Chord-16ft wide	(same as start)	f'c_8.5ksi	0.0000	8.089	0.0000	0.0000	0.0000	90	Back Span
159	159	160	-	Beam	Truss Top Chord-16ft wide	(same as start)	f'c_8.5ksi	0.0000	8.2035	0.0000	0.0000	0.0000	90	Back Span
160	160	161	-	Beam	Truss Top Chord-16ft wide	(same as start)	f'c_8.5ksi	0.0000	2.5001	0.0000	0.0000	0.0000	90	Back Span
161	161	162	-	Beam	Truss Top Chord-16ft wide	(same as start)	f'c_8.5ksi	0.0000	1.5001	0.0000	0.0000	0.0000	90	Back Span
162	163	101	-	Beam	Truss Top Chord-16ft wide	(same as start)	f'c_8.5ksi	0.0000	1.5001	0.0000	0.0000	0.0000	0	Main Span
1001	2	1001	-	Beam	Rigid Link	(same as start)	Rigid	0.0000	6.2398	0.0000	0.0000	0.0000	0	Piers
1002	2	1011	-	Beam	Rigid Link	(same as start)	Rigid	0.0000	6.2398	0.0000	0.0000	0.0000	0	Piers
1003	1001	1011	-	Beam	Rigid Link	(same as start)	Rigid	0.0000	10	0.0000	0.0000	0.0000	0	Piers
1004	1021	1003	-	Beam	Rigid Link	(same as start)	Rigid	0.0000	2.5	0.0000	0.0000	0.0000	0	Piers
1005	1022	1013	-	Beam	Rigid Link	(same as start)	Rigid	0.0000	2.5	0.0000	0.0000	0.0000	0	Piers
1006	1006	1005	-	Beam	End Piers Cap	(same as start)	f'c_5.5	0.0000	1	0.0000	0.0000	0.0000	0	Piers
1007	1005	1004	-	Beam	End Piers Cap	(same as start)	f'c_5.5	0.0000	1	0.0000	0.0000	0.0000	0	Piers
1008	1004	1003	-	Beam	End Piers Cap	(same as start)	f'c_5.5	0.0000	8.8333	0.0000	0.0000	0.0000	0	Piers
1009	1003	1013	-	Beam	End Piers Cap	(same as start)	f'c_5.5	0.0000	10	0.0000	0.0000	0.0000	0	Piers
1010	1013	1014	-	Beam	End Piers Cap	(same as start)	f'c_5.5	0.0000	8.8333	0.0000	0.0000	0.0000	0	Piers
1011	1014	1015	-	Beam	End Piers Cap	(same as start)	f'c_5.5	0.0000	1	0.0000	0.0000	0.0000	0	Piers
1012	1015	1016	-	Beam	End Piers Cap	(same as start)	f'c_5.5	0.0000	1	0.0000	0.0000	0.0000	0	Piers
1013	1005	1007	-	Beam	Rigid Link	(same as start)	Rigid	0.0000	2.5	0.0000	0.0000	0.0000	0	Piers
1014	1007	1008	-	Beam	End Piers Colum	(same as start)	f'c_5.5	0.0000	8.6458	0.0000	0.0000	0.0000	0	Piers

INPUT : Members

ID	I-Joint	J-Joint	Span	Type	Section at Start	Section at End	Material	Prestress Force (kips)	Length (ft)	Rigid Zone from Start (x/L)	Rigid Zone from End (x/L)	Orientation Angle (deg)	Castin g (day)	Structure Group
1015	1008	1009	-	Beam	End Piers Colum	(same as start)	f'c_5.5	0.0000	8.6458	0.0000	0.0000	0.0000	0	Piers
1016	1009	1010	-	Beam	Rigid Link	(same as start)	Rigid	0.0000	1.5	0.0000	0.0000	0.0000	0	Piers
1017	1015	1017	-	Beam	Rigid Link	(same as start)	Rigid	0.0000	2.5	0.0000	0.0000	0.0000	0	Piers
1018	1017	1018	-	Beam	End Piers Colum	(same as start)	f'c_5.5	0.0000	6.8958	0.0000	0.0000	0.0000	0	Piers
1019	1018	1019	-	Beam	End Piers Colum	(same as start)	f'c_5.5	0.0000	6.8958	0.0000	0.0000	0.0000	0	Piers
1020	1019	1020	-	Beam	Rigid Link	(same as start)	Rigid	0.0000	1.5	0.0000	0.0000	0.0000	0	Piers
1021	1002	1021	-	Beam	Rigid Link	(same as start)	Rigid	0.0000	.75	0.0000	0.0000	0.0000	0	Piers
1022	1012	1022	-	Beam	Rigid Link	(same as start)	Rigid	0.0000	.75	0.0000	0.0000	0.0000	0	Piers
2001	2000	2001	-	Beam	Rigid Link	(same as start)	Rigid	0.0000	3.4896	0.0000	0.0000	0.0000	0	Piers
2002	2001	2002	-	Beam	Pier 2 Top	Pier 2 Base	f'c_5.5	0.0000	10.8438	0.0000	0.0000	0.0000	0	Piers
2003	2002	2003	-	Beam	Pier 2 Base Middle	Pier 2 Base	f'c_5.5	0.0000	10.8438	0.0000	0.0000	0.0000	0	Piers
2004	2003	2004	-	Beam	Rigid Link	(same as start)	Rigid	0.0000	2.75	0.0000	0.0000	0.0000	0	Piers
3001	55	3001	-	Beam	Rigid Link	(same as start)	Rigid	0.0000	6.2263	0.0000	0.0000	0.0000	0	Piers
3002	55	3011	-	Beam	Rigid Link	(same as start)	Rigid	0.0000	6.2263	0.0000	0.0000	0.0000	0	Piers
3003	3001	3011	-	Beam	Rigid Link	(same as start)	Rigid	0.0000	10	0.0000	0.0000	0.0000	0	Piers
3004	3002	3003	-	Beam	Rigid Link	(same as start)	Rigid	0.0000	2.5	0.0000	0.0000	0.0000	0	Piers
3005	3012	3013	-	Beam	Rigid Link	(same as start)	Rigid	0.0000	2.5	0.0000	0.0000	0.0000	0	Piers
3006	3006	3005	-	Beam	End Piers Cap	(same as start)	f'c_5.5	0.0000	1	0.0000	0.0000	0.0000	0	Piers
3007	3005	3004	-	Beam	End Piers Cap	(same as start)	f'c_5.5	0.0000	1	0.0000	0.0000	0.0000	0	Piers
3008	3004	3003	-	Beam	End Piers Cap	(same as start)	f'c_5.5	0.0000	8.8333	0.0000	0.0000	0.0000	0	Piers
3009	3003	3013	-	Beam	End Piers Cap	(same as start)	f'c_5.5	0.0000	10	0.0000	0.0000	0.0000	0	Piers
3010	3013	3014	-	Beam	End Piers Cap	(same as start)	f'c_5.5	0.0000	8.8333	0.0000	0.0000	0.0000	0	Piers
3011	3014	3015	-	Beam	End Piers Cap	(same as start)	f'c_5.5	0.0000	1.	0.0000	0.0000	0.0000	0	Piers
3012	3015	3016	-	Beam	End Piers Cap	(same as start)	f'c_5.5	0.0000	1	0.0000	0.0000	0.0000	0	Piers
3013	3005	3007	-	Beam	Rigid Link	(same as start)	Rigid	0.0000	2.5	0.0000	0.0000	0.0000	0	Piers
3014	3007	3008	-	Beam	End Piers Colum	(same as start)	f'c_5.5	0.0000	8.2708	0.0000	0.0000	0.0000	0	Piers
3015	3008	3009	-	Beam	End Piers Colum	(same as start)	f'c_5.5	0.0000	8.2708	0.0000	0.0000	0.0000	0	Piers
3016	3009	3010	-	Beam	Rigid Link	(same as start)	Rigid	0.0000	1.5	0.0000	0.0000	0.0000	0	Piers
3017	3015	3017	-	Beam	Rigid Link	(same as start)	Rigid	0.0000	2.5	0.0000	0.0000	0.0000	0	Piers
3018	3017	3018	-	Beam	End Piers Colum	(same as start)	f'c_5.5	0.0000	10.0208	0.0000	0.0000	0.0000	0	Piers
3019	3018	3019	-	Beam	End Piers Colum	(same as start)	f'c_5.5	0.0000	10.0208	0.0000	0.0000	0.0000	0	Piers
3020	3019	3020	-	Beam	Rigid Link	(same as start)	Rigid	0.0000	1.5	0.0000	0.0000	0.0000	0	Piers
400	28	400	-	Beam	Rigid Link	(same as start)	Rigid	0.0000	.6771	0.0000	0.0000	0.0000	0	Main Span
401	400	401	-	Beam	Pylon Base	(same as start)	f'c_8.5ksi	0.0000	5.8229	0.0000	0.0000	0.0000	0	Main Span

INPUT : Members

ID	I-Joint	J-Joint	Span	Type	Section at Start	Section at End	Material	Prestress Force (kips)	Length (ft)	Rigid Zone from Start (x/L)	Rigid Zone from End (x/L)	Orientation Angle (deg)	Castin g (day)	Structure Group
402	401	402	-	Beam	Pylon Base	(same as start)	f'c_8.5ksi	0.0000	6.125	0.0000	0.0000	0.0000	0	Main Span
403	402	131	-	Beam	Pylon Base	(same as start)	f'c_8.5ksi	0.0000	3.1979	0.0000	0.0000	0.0000	0	Main Span
404	131	403	-	Beam	Rigid Link	Rigid Link	Rigid	0.0000	.7708	0.0000	0.0000	0.0000	97	Pylon
405	403	404	-	Beam	Pylon Base	Pylon 1	f'c_8.5ksi	0.0000	7.1146	0.0000	0.0000	0.0000	97	Pylon
406	404	405	-	Beam	Pylon 1	Pylon 2	f'c_8.5ksi	0.0000	6.5	0.0000	0.0000	0.0000	97	Pylon
407	405	406	-	Beam	Pylon 2	Pylon 3	f'c_8.5ksi	0.0000	6.5	0.0000	0.0000	0.0000	97	Pylon
408	406	407	-	Beam	Pylon 3	Pylon 4	f'c_8.5ksi	0.0000	13.9375	0.0000	0.0000	0.0000	97	Pylon
409	407	408	-	Beam	Pylon 4	Pylon 5	f'c_8.5ksi	0.0000	6.5	0.0000	0.0000	0.0000	97	Pylon
410	408	409	-	Beam	Pylon 5	Pylon 6	f'c_8.5ksi	0.0000	6.5	0.0000	0.0000	0.0000	97	Pylon
411	409	410	-	Beam	Pylon 6	Pylon 7	f'c_8.5ksi	0.0000	6.5	0.0000	0.0000	0.0000	97	Pylon
412	410	411	-	Beam	Pylon 7	Pylon 8	f'c_8.5ksi	0.0000	6.5	0.0000	0.0000	0.0000	97	Pylon
413	411	412	-	Beam	Pylon 8	Pylon Top	f'c_8.5ksi	0.0000	5.7917	0.0000	0.0000	0.0000	97	Pylon
501	411	106	-	Beam	Stay Pipe	(same as start)	Steel Pipe	0.0000	150.2546	0.0000	0.0000	0.0000	0	Stay 5
502	410	111	-	Beam	Stay Pipe	(same as start)	Steel Pipe	0.0000	122.8146	0.0000	0.0000	0.0000	0	Stay 4
503	409	116	-	Beam	Stay Pipe	(same as start)	Steel Pipe	0.0000	95.6538	0.0000	0.0000	0.0000	0	Stay 3
504	408	121	-	Beam	Stay Pipe	(same as start)	Steel Pipe	0.0000	69.1656	0.0000	0.0000	0.0000	0	Stay 2
505	407	126	-	Beam	Stay Pipe	(same as start)	Steel Pipe	0.0000	44.6633	0.0000	0.0000	0.0000	0	Stay 1
601	411	156	-	Beam	Stay Pipe	(same as start)	Steel Pipe	0.0000	96.8688	0.0000	0.0000	0.0000	0	Stay 5
602	410	151	-	Beam	Stay Pipe	(same as start)	Steel Pipe	0.0000	83.488	0.0000	0.0000	0.0000	0	Stay 4
603	409	146	-	Beam	Stay Pipe	(same as start)	Steel Pipe	0.0000	70.1937	0.0000	0.0000	0.0000	0	Stay 3
604	408	141	-	Beam	Stay Pipe	(same as start)	Steel Pipe	0.0000	57.0591	0.0000	0.0000	0.0000	0	Stay 2
605	407	136	-	Beam	Stay Pipe	(same as start)	Steel Pipe	0.0000	44.2367	0.0000	0.0000	0.0000	0	Stay 1
701	1	701	-	Beam	End Diagonal	(same as start)	f'c_8.5ksi	0.0000	1.5833	0.0000	0.0000	0.0000	0	Main Span
702	701	702	-	Beam	End Diagonal	(same as start)	f'c_8.5ksi	0.0000	13.1042	0.0000	0.0000	0.0000	0	Main Span
703	702	101	-	Beam	End Diagonal	(same as start)	f'c_8.5ksi	0.0000	1.1354	0.0000	0.0000	0.0000	0	Main Span
704	3	703	-	Beam	Concrete Truss_diagonal	(same as start)	f'c_8.5ksi	0.0000	5.5007	0.0000	0.0000	0.0000	0	Main Span
705	703	704	-	Beam	Concrete Truss_diagonal	(same as start)	f'c_8.5ksi	0.0000	29.1024	0.0000	0.0000	0.0000	0	Main Span
706	704	801	-	Beam	Concrete Truss_diagonal	(same as start)	f'c_8.5ksi	0.0000	3.9439	0.0000	0.0000	0.0000	0	Main Span
707	7	705	-	Beam	Concrete Truss_diagonal	(same as start)	f'c_8.5ksi	0.0000	2.6026	0.0000	0.0000	0.0000	0	Main Span
708	705	706	-	Beam	Concrete Truss_diagonal	(same as start)	f'c_8.5ksi	0.0000	10.9641	0.0000	0.0000	0.0000	0	Main Span
709	706	801	-	Beam	Concrete Truss_diagonal	(same as start)	f'c_8.5ksi	0.0000	2.8398	0.0000	0.0000	0.0000	0	Main Span
710	8	707	-	Beam	Concrete Truss_diagonal	(same as start)	f'c_8.5ksi	0.0000	5.0032	0.0000	0.0000	0.0000	0	Main Span
711	707	708	-	Beam	Concrete Truss_diagonal	(same as start)	f'c_8.5ksi	0.0000	26.7166	0.0000	0.0000	0.0000	0	Main Span
712	708	802	-	Beam	Concrete Truss_diagonal	(same as start)	f'c_8.5ksi	0.0000	3.5638	0.0000	0.0000	0.0000	0	Main Span

INPUT : Members

ID	I-Joint	J-Joint	Span	Type	Section at Start	Section at End	Material	Prestress Force (kips)	Length (ft)	Rigid Zone from Start (x/L)	Rigid Zone from End (x/L)	Orientation Angle (deg)	Castin g (day)	Structure Group
713	12	709	-	Beam	Concrete Truss_diagonal	(same as start)	f'c_8.5ksi	0.0000	1.7817	0.0000	0.0000	0.0000	0	Main Span
714	709	710	-	Beam	Concrete Truss_diagonal	(same as start)	f'c_8.5ksi	0.0000	11.8244	0.0000	0.0000	0.0000	0	Main Span
715	710	802	-	Beam	Concrete Truss_diagonal	(same as start)	f'c_8.5ksi	0.0000	2.0038	0.0000	0.0000	0.0000	0	Main Span
716	13	711	-	Beam	Concrete Truss_diagonal	(same as start)	f'c_8.5ksi	0.0000	4.3685	0.0000	0.0000	0.0000	0	Main Span
717	711	712	-	Beam	Concrete Truss_diagonal	(same as start)	f'c_8.5ksi	0.0000	23.7603	0.0000	0.0000	0.0000	0	Main Span
718	712	803	-	Beam	Concrete Truss_diagonal	(same as start)	f'c_8.5ksi	0.0000	3.0907	0.0000	0.0000	0.0000	0	Main Span
719	17	713	-	Beam	Concrete Truss_diagonal	(same as start)	f'c_8.5ksi	0.0000	1.7634	0.0000	0.0000	0.0000	0	Main Span
720	713	714	-	Beam	Concrete Truss_diagonal	(same as start)	f'c_8.5ksi	0.0000	13.3331	0.0000	0.0000	0.0000	0	Main Span
721	714	803	-	Beam	Concrete Truss_diagonal	(same as start)	f'c_8.5ksi	0.0000	1.5302	0.0000	0.0000	0.0000	0	Main Span
722	18	715	-	Beam	Concrete Truss_diagonal	(same as start)	f'c_8.5ksi	0.0000	3.5653	0.0000	0.0000	0.0000	0	Main Span
723	715	716	-	Beam	Concrete Truss_diagonal	(same as start)	f'c_8.5ksi	0.0000	20.0922	0.0000	0.0000	0.0000	0	Main Span
724	716	804	-	Beam	Concrete Truss_diagonal	(same as start)	f'c_8.5ksi	0.0000	2.4646	0.0000	0.0000	0.0000	0	Main Span
725	22	717	-	Beam	Concrete Truss_diagonal	(same as start)	f'c_8.5ksi	0.0000	2.705	0.0000	0.0000	0.0000	0	Main Span
726	717	718	-	Beam	Concrete Truss_diagonal	(same as start)	f'c_8.5ksi	0.0000	16.6407	0.0000	0.0000	0.0000	0	Main Span
727	718	804	-	Beam	Concrete Truss_diagonal	(same as start)	f'c_8.5ksi	0.0000	1.8424	0.0000	0.0000	0.0000	0	Main Span
728	23	719	-	Beam	Concrete Truss_diagonal	(same as start)	f'c_8.5ksi	0.0000	2.4859	0.0000	0.0000	0.0000	0	Main Span
729	719	720	-	Beam	Concrete Truss_diagonal	(same as start)	f'c_8.5ksi	0.0000	15.8522	0.0000	0.0000	0.0000	0	Main Span
730	720	805	-	Beam	Concrete Truss_diagonal	(same as start)	f'c_8.5ksi	0.0000	1.6756	0.0000	0.0000	0.0000	0	Main Span
731	27	721	-	Beam	Concrete Truss_diagonal	(same as start)	f'c_8.5ksi	0.0000	4.0964	0.0000	0.0000	0.0000	0	Main Span
732	721	722	-	Beam	Concrete Truss_diagonal	(same as start)	f'c_8.5ksi	0.0000	22.6077	0.0000	0.0000	0.0000	0	Main Span
733	722	805	-	Beam	Concrete Truss_diagonal	(same as start)	f'c_8.5ksi	0.0000	2.903	0.0000	0.0000	0.0000	0	Main Span
740	29	727	-	Beam	Concrete Truss_diagonal	(same as start)	f'c_8.5ksi	0.0000	4.1444	0.0000	0.0000	0.0000	90	Back Span
741	727	728	-	Beam	Concrete Truss_diagonal	(same as start)	f'c_8.5ksi	0.0000	22.7955	0.0000	0.0000	0.0000	90	Back Span
742	728	806	-	Beam	Concrete Truss_diagonal	(same as start)	f'c_8.5ksi	0.0000	2.9393	0.0000	0.0000	0.0000	90	Back Span
743	33	729	-	Beam	Concrete Truss_diagonal	(same as start)	f'c_8.5ksi	0.0000	3.6214	0.0000	0.0000	0.0000	90	Back Span
744	729	730	-	Beam	Concrete Truss_diagonal	(same as start)	f'c_8.5ksi	0.0000	14.5551	0.0000	0.0000	0.0000	90	Back Span
745	730	806	-	Beam	Concrete Truss_diagonal	(same as start)	f'c_8.5ksi	0.0000	1.6528	0.0000	0.0000	0.0000	90	Back Span
746	34	731	-	Beam	Concrete Truss_diagonal	(same as start)	f'c_8.5ksi	0.0000	3.5032	0.0000	0.0000	0.0000	90	Back Span
747	731	732	-	Beam	Concrete Truss_diagonal	(same as start)	f'c_8.5ksi	0.0000	8.5359	0.0000	0.0000	0.0000	90	Back Span
748	732	807	-	Beam	Concrete Truss_diagonal	(same as start)	f'c_8.5ksi	0.0000	3.5643	0.0000	0.0000	0.0000	90	Back Span
749	38	733	-	Beam	Concrete Truss_diagonal	(same as start)	f'c_8.5ksi	0.0000	4.1123	0.0000	0.0000	0.0000	90	Back Span
750	733	734	-	Beam	Concrete Truss_diagonal	(same as start)	f'c_8.5ksi	0.0000	14.1214	0.0000	0.0000	0.0000	90	Back Span
751	734	807	-	Beam	Concrete Truss_diagonal	(same as start)	f'c_8.5ksi	0.0000	3.3076	0.0000	0.0000	0.0000	90	Back Span
752	39	735	-	Beam	Concrete Truss_diagonal	(same as start)	f'c_8.5ksi	0.0000	4.0601	0.0000	0.0000	0.0000	90	Back Span

INPUT : Members

ID	I-Joint	J-Joint	Span	Type	Section at Start	Section at End	Material	Prestress Force (kips)	Length (ft)	Rigid Zone from Start (x/L)	Rigid Zone from End (x/L)	Orientation Angle (deg)	Castin g (day)	Structure Group
753	735	736	-	Beam	Concrete Truss_diagonal	(same as start)	f'c_8.5ksi	0.0000	7.6343	0.0000	0.0000	0.0000	90	Back Span
754	736	808	-	Beam	Concrete Truss_diagonal	(same as start)	f'c_8.5ksi	0.0000	4.2002	0.0000	0.0000	0.0000	90	Back Span
755	43	737	-	Beam	Concrete Truss_diagonal	(same as start)	f'c_8.5ksi	0.0000	4.5914	0.0000	0.0000	0.0000	90	Back Span
756	737	738	-	Beam	Concrete Truss_diagonal	(same as start)	f'c_8.5ksi	0.0000	14.3266	0.0000	0.0000	0.0000	90	Back Span
757	738	808	-	Beam	Concrete Truss_diagonal	(same as start)	f'c_8.5ksi	0.0000	3.9814	0.0000	0.0000	0.0000	90	Back Span
758	44	739	-	Beam	Concrete Truss_diagonal	(same as start)	f'c_8.5ksi	0.0000	4.579	0.0000	0.0000	0.0000	90	Back Span
759	739	740	-	Beam	Concrete Truss_diagonal	(same as start)	f'c_8.5ksi	0.0000	7.0097	0.0000	0.0000	0.0000	90	Back Span
760	740	809	-	Beam	Concrete Truss_diagonal	(same as start)	f'c_8.5ksi	0.0000	4.7797	0.0000	0.0000	0.0000	90	Back Span
761	48	741	-	Beam	Concrete Truss_diagonal	(same as start)	f'c_8.5ksi	0.0000	5.0245	0.0000	0.0000	0.0000	90	Back Span
762	741	742	-	Beam	Concrete Truss_diagonal	(same as start)	f'c_8.5ksi	0.0000	14.3589	0.0000	0.0000	0.0000	90	Back Span
763	742	809	-	Beam	Concrete Truss_diagonal	(same as start)	f'c_8.5ksi	0.0000	4.5907	0.0000	0.0000	0.0000	90	Back Span
764	49	743	-	Beam	Concrete Truss_diagonal	(same as start)	f'c_8.5ksi	0.0000	5.0428	0.0000	0.0000	0.0000	90	Back Span
765	743	744	-	Beam	Concrete Truss_diagonal	(same as start)	f'c_8.5ksi	0.0000	6.5298	0.0000	0.0000	0.0000	90	Back Span
766	744	810	-	Beam	Concrete Truss_diagonal	(same as start)	f'c_8.5ksi	0.0000	5.3029	0.0000	0.0000	0.0000	90	Back Span
767	53	745	-	Beam	Concrete Truss_diagonal	(same as start)	f'c_8.5ksi	0.0000	3.3299	0.0000	0.0000	0.0000	90	Back Span
768	745	746	-	Beam	Concrete Truss_diagonal	(same as start)	f'c_8.5ksi	0.0000	16.3969	0.0000	0.0000	0.0000	90	Back Span
769	746	810	-	Beam	Concrete Truss_diagonal	(same as start)	f'c_8.5ksi	0.0000	5.1245	0.0000	0.0000	0.0000	90	Back Span
770	54	747	-	Beam	End Diagonal	(same as start)	f'c_8.5ksi	0.0000	1.6042	0.0000	0.0000	0.0000	90	Back Span
771	747	748	-	Beam	End Diagonal	(same as start)	f'c_8.5ksi	0.0000	12.9688	0.0000	0.0000	0.0000	90	Back Span
772	748	161	-	Beam	End Diagonal	(same as start)	f'c_8.5ksi	0.0000	1.25	0.0000	0.0000	0.0000	90	Back Span
800	801	106	-	Beam	Rigid Link	(same as start)	Rigid	0.0000	.5524	0.0000	0.0000	0.0000	0	Main Span
801	802	111	-	Beam	Rigid Link	(same as start)	Rigid	0.0000	.5038	0.0000	0.0000	0.0000	0	Main Span
802	803	116	-	Beam	Rigid Link	(same as start)	Rigid	0.0000	.455	0.0000	0.0000	0.0000	0	Main Span
803	804	121	-	Beam	Rigid Link	(same as start)	Rigid	0.0000	.379	0.0000	0.0000	0.0000	0	Main Span
804	805	126	-	Beam	Rigid Link	(same as start)	Rigid	0.0000	.293	0.0000	0.0000	0.0000	90	Back Span
805	806	136	-	Beam	Rigid Link	(same as start)	Rigid	0.0000	.2744	0.0000	0.0000	0.0000	90	Back Span
806	807	141	-	Beam	Rigid Link	(same as start)	Rigid	0.0000	.3109	0.0000	0.0000	0.0000	90	Back Span
807	808	146	-	Beam	Rigid Link	(same as start)	Rigid	0.0000	.3264	0.0000	0.0000	0.0000	90	Back Span
808	809	151	-	Beam	Rigid Link	(same as start)	Rigid	0.0000	.3408	0.0000	0.0000	0.0000	90	Back Span
809	810	156	-	Beam	Rigid Link	(same as start)	Rigid	0.0000	.3479	0.0000	0.0000	0.0000	90	Back Span
810	801	105	-	Beam	Rigid Link	(same as start)	Rigid	0.0000	.2384	0.0000	0.0000	0.0000	0	Main Span
811	802	110	-	Beam	Rigid Link	(same as start)	Rigid	0.0000	.2183	0.0000	0.0000	0.0000	0	Main Span
812	803	115	-	Beam	Rigid Link	(same as start)	Rigid	0.0000	.2401	0.0000	0.0000	0.0000	0	Main Span
813	804	120	-	Beam	Rigid Link	(same as start)	Rigid	0.0000	.2954	0.0000	0.0000	0.0000	0	Main Span

INPUT : Members

ID	I-Joint	J-Joint	Span	Type	Section at Start	Section at End	Material	Prestress Force (kips)	Length (ft)	Rigid Zone from Start (x/L)	Rigid Zone from End (x/L)	Orientation Angle (deg)	Castin g (day)	Structure Group
814	805	125	-	Beam	Rigid Link	(same as start)	Rigid	0.0000	.4224	0.0000	0.0000	0.0000	0	Main Span
815	806	137	-	Beam	Rigid Link	(same as start)	Rigid	0.0000	.4196	0.0000	0.0000	0.0000	90	Back Span
816	807	142	-	Beam	Rigid Link	(same as start)	Rigid	0.0000	.2228	0.0000	0.0000	0.0000	90	Back Span
817	808	147	-	Beam	Rigid Link	(same as start)	Rigid	0.0000	.2229	0.0000	0.0000	0.0000	90	Back Span
818	809	152	-	Beam	Rigid Link	(same as start)	Rigid	0.0000	.2347	0.0000	0.0000	0.0000	90	Back Span
819	810	157	-	Beam	Rigid Link	(same as start)	Rigid	0.0000	.2381	0.0000	0.0000	0.0000	90	Back Span

INPUT : Springs

ID	I-Joint	J-Joint	Type	Direction	K Tension (kips/in)	K Compression (kips/in)	Maximum Tension (kips or kips-in)	Maximum Compression (kips or kips-in)	Hook (in)	Gap (in)	Properties Definition	Structure / Construction Group
1	1001	1002	Linear	Trans. Z	12,037.2000	12,037.2000					(none)	Piers
2	1001	1002	Linear	Trans. X	24.0000	24.0000					(none)	Piers
3	1001	1002	Linear	Trans. Y	24.0000	24.0000					(none)	Piers
4	1011	1012	Linear	Trans. Z	12,037.2000	12,037.2000					(none)	Piers
5	1011	1012	Linear	Trans. X	24.0000	24.0000					(none)	Piers
6	1011	1012	Linear	Trans. Y	24.0000	24.0000					(none)	Piers
7	3001	3002	Linear	Trans. Z	12,037.2000	12,037.2000					(none)	Piers
8	3001	3002	Linear	Trans. X	24.0000	24.0000					(none)	Piers
9	3001	3002	Linear	Trans. Y	24.0000	24.0000					(none)	Piers
10	3011	3012	Linear	Trans. Z	12,037.2000	12,037.2000					(none)	Piers
11	3011	3012	Linear	Trans. X	24.0000	24.0000					(none)	Piers
12	3011	3012	Linear	Trans. Y	24.0000	24.0000					(none)	Piers
13	2004	(none)	Linear	K(6x6)	0.0000	0.0000					Pylon	Piers

INPUT : Slave/Masters

Slave Joint	Master Joint X-Tran	Master Joint Y-Tran	Master Joint Z-Tran	Master Joint X-Rot	Master Joint Y-Rot	Master Joint Z-Rot
2000	28	28	28	28	28	28

INPUT : Tendons

Tendon Name	Design Grou	Material	Exposure	Strand Area (per strand)	# of Strands	Jacking Force @ Start	Jacking Force @ End	Jacking End	Anchor Set (ft)	Wobble Coefficient	Curvature Friction Coefficie	Peak Stress Ratio -	Peak Stress Ratio -	Elongation After	Elongation After	Elongation @ Left of	Elongation @ Right
Main Deck T1-L	(non	Steel PT	Post-Tension	0.0015	12	527.2929	0	Start	0.0313	0.0002	0.2500	0.7000	0.7400	0	0	0	0
Main Deck T1-R	(non	Steel PT	Post-Tension	0.0015	12	527.2929	0	Start	0.0313	0.0002	0.2500	0.7000	0.7400	0	0	0	0
Main Deck T2-L	(non	Steel PT	Post-Tension	0.0015	19	834.8804	0	Start	0.0313	0.0002	0.2500	0.7000	0.7400	0	0	0	0
Main Deck T2-R	(non	Steel PT	Post-Tension	0.0015	19	834.8804	0	Start	0.0313	0.0002	0.2500	0.7000	0.7400	0	0	0	0
Main Deck T3-L	(non	Steel PT	Post-Tension	0.0015	19	834.8804	0	Start	0.0313	0.0002	0.2500	0.7000	0.7400	0	0	0	0
Main Deck T3-R	(non	Steel PT	Post-Tension	0.0015	19	834.8804	0	Start	0.0313	0.0002	0.2500	0.7000	0.7400	0	0	0	0
Main Deck T4-L	(non	Steel PT	Post-Tension	0.0015	19	834.8804	0	Start	0.0313	0.0002	0.2500	0.7000	0.7400	0	0	0	0
Main Deck T4-R	(non	Steel PT	Post-Tension	0.0015	19	834.8804	0	Start	0.0313	0.0002	0.2500	0.7000	0.7400	0	0	0	0
Main Deck T5-L	(non	Steel PT	Post-Tension	0.0015	19	834.8804	0	Start	0.0313	0.0002	0.2500	0.7000	0.7400	0	0	0	0
Main Deck T5-R	(non	Steel PT	Post-Tension	0.0015	19	834.8804	0	Start	0.0313	0.0002	0.2500	0.7000	0.7400	0	0	0	0
Main Deck T6-L	(non	Steel PT	Post-Tension	0.0015	19	834.8804	0	Start	0.0313	0.0002	0.2500	0.7000	0.7400	0	0	0	0
Main Deck T6-R	(non	Steel PT	Post-Tension	0.0015	19	834.8804	0	Start	0.0313	0.0002	0.2500	0.7000	0.7400	0	0	0	0
Main Canopy C3-L	(non	Steel PT	Post-Tension	0.0015	12	530.6343	0	Start	0.0313	0.0002	0.2500	0.7000	0.7400	0	0	0	0
Main Canopy C3-R	(non	Steel PT	Post-Tension	0.0015	12	530.6343	0	Start	0.0313	0.0002	0.2500	0.7000	0.7400	0	0	0	0
Main Canopy C4-L	(non	Steel PT	Post-Tension	0.0015	12	533.8417	0	Start	0.0313	0.0002	0.2500	0.7000	0.7400	0	0	0	0
Main Canopy C4-R	(non	Steel PT	Post-Tension	0.0015	12	533.8417	0	Start	0.0313	0.0002	0.2500	0.7000	0.7400	0	0	0	0
Back Deck T1-L	(non	Steel PT	Post-Tension	0.0015	19	0	828.2799	End	0.0313	0.0002	0.2500	0.7000	0.7400	0	0	0	0
Back Deck T1-R	(non	Steel PT	Post-Tension	0.0015	19	0	828.2799	End	0.0313	0.0002	0.2500	0.7000	0.7400	0	0	0	0
Back Deck T2-L	(non	Steel PT	Post-Tension	0.0015	19	0	828.2799	End	0.0313	0.0002	0.2500	0.7000	0.7400	0	0	0	0
Back Deck T2-R	(non	Steel PT	Post-Tension	0.0015	19	0	828.2799	End	0.0313	0.0002	0.2500	0.7000	0.7400	0	0	0	0
Back Deck T3-L	(non	Steel PT	Post-Tension	0.0015	19	0	828.2799	End	0.0313	0.0002	0.2500	0.7000	0.7400	0	0	0	0
Back Deck T3-R	(non	Steel PT	Post-Tension	0.0015	19	0	828.2799	End	0.0313	0.0002	0.2500	0.7000	0.7400	0	0	0	0
Back Canopy C3-L	(non	Steel PT	Post-Tension	0.0015	12	0	518.7349	End	0.0313	0.0002	0.2500	0.7000	0.7400	0	0	0	0
Back Canopy C3-R	(non	Steel PT	Post-Tension	0.0015	12	0	518.7349	End	0.0313	0.0002	0.2500	0.7000	0.7400	0	0	0	0
Full Length - Canopy	(non	Steel PT	Post-Tension	0.0015	12	0	555.7080	End	0.0313	0.0002	0.2500	0.7000	0.7400	0	0	0	0
Full Length - Canopy	(non	Steel PT	Post-Tension	0.0015	12	0	555.7080	End	0.0313	0.0002	0.2500	0.7000	0.7400	0	0	0	0
Full Length - Canopy	(non	Steel PT	Post-Tension	0.0015	12	0	555.7080	End	0.0313	0.0002	0.2500	0.7000	0.7400	0	0	0	0
Full Length - Canopy	(non	Steel PT	Post-Tension	0.0015	12	0	555.7080	End	0.0313	0.0002	0.2500	0.7000	0.7400	0	0	0	0

INPUT : More Material Properties

Name	Yield Stress (kips/ft²)	Post-yield to Initial Slope Ratio	Concrete Strength Specimen	Concrete fc28 or Steel Fu (kips/ft²)	Concrete Cement Hardening Type	Tendon GUTS (kips/ft²)	Material Time-Effect	Assigned
Rigid	0.00	0.020	Cylinder	0.00	Not Concrete	0.00	(NONE)	Yes
Steel Pipe	19,440.00	0.020	Cylinder	0.00	Not Concrete	0.00	(NONE)	Yes
Steel PT	34,992.00	0.020	Cylinder	0.00	Not Concrete	38,880.00	steel	Yes
f'c_5.5	0.00	0.020	Cylinder	792.00	Not Concrete	0.00	(NONE)	Yes
f'c_8.5ksi	0.00	0.020	Cylinder	1,224.00	Normal	0.00	concrete	Yes
f'c_8.5ksi_Deck	0.00	0.020	Cylinder	1,224.00	Normal	0.00	concrete	No
f'c_8.5ksi_Canopy	0.00	0.020	Cylinder	1,224.00	Normal	0.00	concrete	No

Load Cases

ID	Name	Analysis Type	Class	Status	Weight Factor X	Weight Factor Y	Weight Factor Z	Is Dynamic Mass?	Assigned to Load Combinati	# of Joint Loads	# of Support Loads	# of Member Loads	# of Member Thermal	# of Plate Loads	# of Moving Loads	# of THA Loading	# of THA Initial
1	SW	Static	Dead Load	Active	0.0000	0.0000	-1.0000	Yes	Yes	0	0	0	0	0	0	0	0
2	DW_utilities	Static	None	Active	0.0000	0.0000	0.0000	Yes	Yes	0	0	57	0	0	0	0	0
3	LL1_Deck	Static	None	Active	0.0000	0.0000	0.0000	No	No	0	0	57	0	0	0	0	0
4	LL2_Deck	Static	None	Active	0.0000	0.0000	0.0000	No	No	0	0	27	0	0	0	0	0
5	LL3_Deck	Static	None	Active	0.0000	0.0000	0.0000	No	No	0	0	30	0	0	0	0	0
6	LL1_Roof	Static	None	Active	0.0000	0.0000	0.0000	No	No	0	0	60	0	0	0	0	0
7	LL2_Roof	Static	None	Active	0.0000	0.0000	0.0000	No	No	0	0	30	0	0	0	0	0
8	LL3_Roof	Static	None	Active	0.0000	0.0000	0.0000	No	No	0	0	30	0	0	0	0	0
9	WS_0 deg	Static	None	Active	0.0000	0.0000	0.0000	No	Yes	0	0	286	0	0	0	0	0
11	WS_60 deg	Static	None	Active	0.0000	0.0000	0.0000	No	No	0	0	509	0	0	0	0	0
13	WUP	Static	None	Active	0.0000	0.0000	0.0000	No	Yes	0	0	234	0	0	0	0	0
14	WS_-60 deg	Static	None	Active	0.0000	0.0000	0.0000	No	No	0	0	509	0	0	0	0	0
16	TU+	Static	None	Active	0.0000	0.0000	0.0000	No	Yes	0	0	0	193	0	0	0	0
17	TU-	Static	None	Active	0.0000	0.0000	0.0000	No	No	0	0	0	193	0	0	0	0
18	DC3	Static	Dead Load of	Active	0.0000	0.0000	0.0000	Yes	Yes	1	0	57	0	0	0	0	0
19	Temp.	Static	None	Active	0.0000	0.0000	0.0000	No	Yes	0	0	0	10	0	0	0	0
20	WS_45 deg	Static	None	Active	0.0000	0.0000	0.0000	No	Yes	0	0	509	0	0	0	0	0
21	WS_30 deg	Static	None	Active	0.0000	0.0000	0.0000	No	No	0	0	509	0	0	0	0	0
22	WS_15 deg	Static	None	Active	0.0000	0.0000	0.0000	No	No	0	0	509	0	0	0	0	0
23	WS_-45 deg	Static	None	Active	0.0000	0.0000	0.0000	No	No	0	0	509	0	0	0	0	0
24	WS_-30 deg	Static	None	Active	0.0000	0.0000	0.0000	No	No	0	0	509	0	0	0	0	0

Load Cases

ID	Name	Analysis Type	Class	Status	Weight Factor X	Weight Factor Y	Weight Factor Z	Is Dynamic Mass?	Assigned to Load Combinati	# of Joint Loads	# of Support Loads	# of Member Loads	# of Member Thermal	# of Plate Loads	# of Moving Loads	# of THA Loading	# of THA Initial
25	WS_-15 deg	Static	None	Active	0.0000	0.0000	0.0000	No	No	0	0	509	0	0	0	0	0
26	LL1_Deck_Offs	Static	None	Active	0.0000	0.0000	0.0000	No	Yes	0	0	114	0	0	0	0	0
27	LL2_Deck_Offs	Static	None	Active	0.0000	0.0000	0.0000	No	No	0	0	54	0	0	0	0	0
28	LL3_Deck_Offs	Static	None	Active	0.0000	0.0000	0.0000	No	No	0	0	60	0	0	0	0	0
29	CT_0 deg	Static	None	Active	0.0000	0.0000	0.0000	No	No	0	0	3	0	0	0	0	0
30	CT_15 deg	Static	None	Active	0.0000	0.0000	0.0000	No	No	0	0	6	0	0	0	0	0
31	WS_0	Static	None	Active	0.0000	0.0000	0.0000	No	No	0	0	286	0	0	0	0	0
32	WS_60	Static	None	Active	0.0000	0.0000	0.0000	No	No	0	0	509	0	0	0	0	0
33	WS_45	Static	None	Active	0.0000	0.0000	0.0000	No	No	0	0	509	0	0	0	0	0
34	WS_30	Static	None	Active	0.0000	0.0000	0.0000	No	No	0	0	509	0	0	0	0	0
35	WS_15	Static	None	Active	0.0000	0.0000	0.0000	No	No	0	0	509	0	0	0	0	0
36	WS_-60	Static	None	Active	0.0000	0.0000	0.0000	No	No	0	0	509	0	0	0	0	0
37	WS_-45	Static	None	Active	0.0000	0.0000	0.0000	No	No	0	0	509	0	0	0	0	0
38	WS_-30	Static	None	Active	0.0000	0.0000	0.0000	No	No	0	0	509	0	0	0	0	0
39	WS_-15	Static	None	Active	0.0000	0.0000	0.0000	No	No	0	0	509	0	0	0	0	0
40	DC2_Main	Static	Dead Load	Active	0.0000	0.0000	0.0000	Yes	Yes	4	0	22	0	0	0	0	0
41	DC2_Back	Static	Dead Load	Active	0.0000	0.0000	0.0000	Yes	Yes	5	0	26	0	0	0	0	0

LOAD CASE DW_utilities, Member Loads

Member	Type	Direction	Magnitude at Start (kips or kips-ft)	Magnitude at End (kips or kips-ft)	Start Position (x/L)	End Position from start (x/L)
1	Uniform Force	Global Z	-0.7380		0.0000	1.0000
2	Uniform Force	Global Z	-0.7380		0.0000	1.0000
3	Uniform Force	Global Z	-0.7380		0.0000	1.0000
4	Uniform Force	Global Z	-0.7380		0.0000	1.0000
5	Uniform Force	Global Z	-0.7380		0.0000	1.0000
6	Uniform Force	Global Z	-0.7380		0.0000	1.0000
7	Uniform Force	Global Z	-0.7380		0.0000	1.0000
8	Uniform Force	Global Z	-0.7380		0.0000	1.0000
9	Uniform Force	Global Z	-0.7380		0.0000	1.0000
10	Uniform Force	Global Z	-0.7380		0.0000	1.0000
11	Uniform Force	Global Z	-0.7380		0.0000	1.0000
12	Uniform Force	Global Z	-0.7380		0.0000	1.0000

LOAD CASE DW utilities, Member Loads

Member	Type	Direction	Magnitude at Start (kips or kips-ft)	Magnitude at End (kips or kips-ft)	Start Position (x/L)	End Position from start (x/L)
13	Uniform Force	Global Z	-0.7380		0.0000	1.0000
14	Uniform Force	Global Z	-0.7380		0.0000	1.0000
15	Uniform Force	Global Z	-0.7380		0.0000	1.0000
16	Uniform Force	Global Z	-0.7380		0.0000	1.0000
17	Uniform Force	Global Z	-0.7380		0.0000	1.0000
18	Uniform Force	Global Z	-0.7380		0.0000	1.0000
19	Uniform Force	Global Z	-0.7380		0.0000	1.0000
20	Uniform Force	Global Z	-0.7380		0.0000	1.0000
21	Uniform Force	Global Z	-0.7380		0.0000	1.0000
22	Uniform Force	Global Z	-0.7380		0.0000	1.0000
23	Uniform Force	Global Z	-0.7380		0.0000	1.0000
24	Uniform Force	Global Z	-0.7380		0.0000	1.0000
25	Uniform Force	Global Z	-0.7380		0.0000	1.0000
26	Uniform Force	Global Z	-0.7380		0.0000	1.0000
27	Uniform Force	Global Z	-0.7380		0.0000	1.0000
28	Uniform Force	Global Z	-0.7380		0.0000	1.0000
29	Uniform Force	Global Z	-0.7380		0.0000	1.0000
30	Uniform Force	Global Z	-0.7380		0.0000	1.0000
31	Uniform Force	Global Z	-0.7380		0.0000	1.0000
32	Uniform Force	Global Z	-0.7380		0.0000	1.0000
33	Uniform Force	Global Z	-0.7380		0.0000	1.0000
34	Uniform Force	Global Z	-0.7380		0.0000	1.0000
35	Uniform Force	Global Z	-0.7380		0.0000	1.0000
36	Uniform Force	Global Z	-0.7380		0.0000	1.0000
37	Uniform Force	Global Z	-0.7380		0.0000	1.0000
38	Uniform Force	Global Z	-0.7380		0.0000	1.0000
39	Uniform Force	Global Z	-0.7380		0.0000	1.0000
40	Uniform Force	Global Z	-0.7380		0.0000	1.0000
41	Uniform Force	Global Z	-0.7380		0.0000	1.0000
42	Uniform Force	Global Z	-0.7380		0.0000	1.0000
43	Uniform Force	Global Z	-0.7380		0.0000	1.0000
44	Uniform Force	Global Z	-0.7380		0.0000	1.0000
45	Uniform Force	Global Z	-0.7380		0.0000	1.0000
46	Uniform Force	Global Z	-0.7380		0.0000	1.0000

LOAD CASE DW utilities, Member Loads

Member	Type	Direction	Magnitude at Start (kips or kips-ft)	Magnitude at End (kips or kips-ft)	Start Position (x/L)	End Position from start (x/L)
47	Uniform Force	Global Z	-0.7380		0.0000	1.0000
48	Uniform Force	Global Z	-0.7380		0.0000	1.0000
49	Uniform Force	Global Z	-0.7380		0.0000	1.0000
50	Uniform Force	Global Z	-0.7380		0.0000	1.0000
51	Uniform Force	Global Z	-0.7380		0.0000	1.0000
52	Uniform Force	Global Z	-0.7380		0.0000	1.0000
53	Uniform Force	Global Z	-0.7380		0.0000	1.0000
54	Uniform Force	Global Z	-0.7380		0.0000	1.0000
55	Uniform Force	Global Z	-0.7380		0.0000	1.0000
56	Uniform Force	Global Z	-0.7380		0.0000	1.0000
57	Uniform Force	Global Z	-0.7380		0.0000	1.0000

LOAD CASE DC3, Member Loads

Member	Type	Direction	Magnitude at Start (kips or kips-ft)	Magnitude at End (kips or kips-ft)	Start Position (x/L)	End Position from start (x/L)
1	Uniform Force	Global Z	-0.3960		0.0000	1.0000
2	Uniform Force	Global Z	-0.3960		0.0000	1.0000
3	Uniform Force	Global Z	-0.3960		0.0000	1.0000
4	Uniform Force	Global Z	-0.3960		0.0000	1.0000
5	Uniform Force	Global Z	-0.3960		0.0000	1.0000
6	Uniform Force	Global Z	-0.3960		0.0000	1.0000
7	Uniform Force	Global Z	-0.3960		0.0000	1.0000
8	Uniform Force	Global Z	-0.3960		0.0000	1.0000
9	Uniform Force	Global Z	-0.3960		0.0000	1.0000
10	Uniform Force	Global Z	-0.3960		0.0000	1.0000
11	Uniform Force	Global Z	-0.3960		0.0000	1.0000
12	Uniform Force	Global Z	-0.3960		0.0000	1.0000
13	Uniform Force	Global Z	-0.3960		0.0000	1.0000
14	Uniform Force	Global Z	-0.3960		0.0000	1.0000
15	Uniform Force	Global Z	-0.3960		0.0000	1.0000
16	Uniform Force	Global Z	-0.3960		0.0000	1.0000
17	Uniform Force	Global Z	-0.3960		0.0000	1.0000
18	Uniform Force	Global Z	-0.3960		0.0000	1.0000

LOAD CASE DC3, Member Loads

Member	Type	Direction	Magnitude at Start (kips or kips-ft)	Magnitude at End (kips or kips-ft)	Start Position (x/L)	End Position from start (x/L)
19	Uniform Force	Global Z	-0.3960		0.0000	1.0000
20	Uniform Force	Global Z	-0.3960		0.0000	1.0000
21	Uniform Force	Global Z	-0.3960		0.0000	1.0000
22	Uniform Force	Global Z	-0.3960		0.0000	1.0000
23	Uniform Force	Global Z	-0.3960		0.0000	1.0000
24	Uniform Force	Global Z	-0.3960		0.0000	1.0000
25	Uniform Force	Global Z	-0.3960		0.0000	1.0000
26	Uniform Force	Global Z	-0.3960		0.0000	1.0000
27	Uniform Force	Global Z	-0.3960		0.0000	1.0000
28	Uniform Force	Global Z	-0.3960		0.0000	1.0000
29	Uniform Force	Global Z	-0.3960		0.0000	1.0000
30	Uniform Force	Global Z	-0.3960		0.0000	1.0000
31	Uniform Force	Global Z	-0.3960		0.0000	1.0000
32	Uniform Force	Global Z	-0.3960		0.0000	1.0000
33	Uniform Force	Global Z	-0.3960		0.0000	1.0000
34	Uniform Force	Global Z	-0.3960		0.0000	1.0000
35	Uniform Force	Global Z	-0.3960		0.0000	1.0000
36	Uniform Force	Global Z	-0.3960		0.0000	1.0000
37	Uniform Force	Global Z	-0.3960		0.0000	1.0000
38	Uniform Force	Global Z	-0.3960		0.0000	1.0000
39	Uniform Force	Global Z	-0.3960		0.0000	1.0000
40	Uniform Force	Global Z	-0.3960		0.0000	1.0000
41	Uniform Force	Global Z	-0.3960		0.0000	1.0000
42	Uniform Force	Global Z	-0.3960		0.0000	1.0000
43	Uniform Force	Global Z	-0.3960		0.0000	1.0000
44	Uniform Force	Global Z	-0.3960		0.0000	1.0000
45	Uniform Force	Global Z	-0.3960		0.0000	1.0000
46	Uniform Force	Global Z	-0.3960		0.0000	1.0000
47	Uniform Force	Global Z	-0.3960		0.0000	1.0000
48	Uniform Force	Global Z	-0.3960		0.0000	1.0000
49	Uniform Force	Global Z	-0.3960		0.0000	1.0000
50	Uniform Force	Global Z	-0.3960		0.0000	1.0000
51	Uniform Force	Global Z	-0.3960		0.0000	1.0000
52	Uniform Force	Global Z	-0.3960		0.0000	1.0000

LOAD CASE DC3, Member Loads

Member	Type	Direction	Magnitude at Start (kips or kips-ft)	Magnitude at End (kips or kips-ft)	Start Position (x/L)	End Position from start (x/L)
53	Uniform Force	Global Z	-0.3960		0.0000	1.0000
54	Uniform Force	Global Z	-0.3960		0.0000	1.0000
55	Uniform Force	Global Z	-0.3960		0.0000	1.0000
56	Uniform Force	Global Z	-0.3960		0.0000	1.0000
57	Uniform Force	Global Z	-0.3960		0.0000	1.0000

LOAD CASE DC3, Joint Loads

Joint	X-Force (kips)	Y-Force (kips)	Z-Force (kips)	X-Moment (kips-ft)	Y-Moment (kips-ft)	Z-Moment (kips-ft)
58	0.0000	0.0000	-5.3000	0.0000	0.0000	0.0000

LOAD CASE DC2_Main Span, Member Loads

Member	Type	Direction	Magnitude at Start (kips or kips-ft)	Magnitude at End (kips or kips-ft)	Start Position (x/L)	End Position from start (x/L)
104	Uniform Force	Global Z	-0.6020		0.4100	1.0000
105	Uniform Force	Global Z	-0.6020		0.0000	1.0000
106	Uniform Force	Global Z	-0.6020		0.0000	1.0000
107	Uniform Force	Global Z	-0.6020		0.0000	0.6800
109	Uniform Force	Global Z	-0.6020		0.3000	1.0000
110	Uniform Force	Global Z	-0.6020		0.0000	1.0000
111	Uniform Force	Global Z	-0.6020		0.0000	1.0000
112	Uniform Force	Global Z	-0.6020		0.0000	0.6500
113	Uniform Force	Global Z	-0.6020		0.8900	1.0000
114	Uniform Force	Global Z	-0.6020		0.0000	1.0000
115	Uniform Force	Global Z	-0.6020		0.0000	1.0000
116	Uniform Force	Global Z	-0.6020		0.0000	1.0000
117	Uniform Force	Global Z	-0.6020		0.0000	0.4900
119	Uniform Force	Global Z	-0.5830		0.0000	1.0000
120	Uniform Force	Global Z	-0.5830		0.0000	1.0000
121	Uniform Force	Global Z	-0.5830		0.0000	1.0000
122	Uniform Force	Global Z	-0.5830		0.0000	0.4100
123	Uniform Force	Global Z	-0.5830		0.8800	1.0000
124	Uniform Force	Global Z	-0.5830		0.0000	1.0000

LOAD CASE DC2 Main Span, Member Loads

Member	Type	Direction	Magnitude at Start (kips or kips-ft)	Magnitude at End (kips or kips-ft)	Start Position (x/L)	End Position from start (x/L)
125	Uniform Force	Global Z	-0.5830		0.0000	1.0000
126	Uniform Force	Global Z	-0.5830		0.0000	1.0000
127	Uniform Force	Global Z	-0.5830		0.0000	0.2800

LOAD CASE DC2_Main Span, Joint Loads

Joint	X-Force (kips)	Y-Force (kips)	Z-Force (kips)	X-Moment (kips-ft)	Y-Moment (kips-ft)	Z-Moment (kips-ft)
2	0.0000	0.0000	-24.3000	0.0000	0.0000	0.0000
28	0.0000	0.0000	-13.9000	0.0000	0.0000	0.0000
101	0.0000	0.0000	-9.1000	0.0000	0.0000	0.0000
131	0.0000	0.0000	-6.5000	0.0000	0.0000	0.0000

LOAD CASE DC2_Back Span, Member Loads

Member	Type	Direction	Magnitude at Start (kips or kips-ft)	Magnitude at End (kips or kips-ft)	Start Position (x/L)	End Position from start (x/L)
134	Uniform Force	Global Z	-0.5830		0.6700	1.0000
135	Uniform Force	Global Z	-0.5830		0.0000	1.0000
136	Uniform Force	Global Z	-0.5830		0.0000	1.0000
137	Uniform Force	Global Z	-0.5830		0.0000	1.0000
138	Uniform Force	Global Z	-0.5830		0.0000	0.2100
138	Uniform Force	Global Z	-0.5830		0.8400	1.0000
139	Uniform Force	Global Z	-0.5830		0.0000	1.0000
140	Uniform Force	Global Z	-0.5830		0.0000	1.0000
141	Uniform Force	Global Z	-0.5830		0.0000	1.0000
142	Uniform Force	Global Z	-0.5830		0.0000	1.0000
143	Uniform Force	Global Z	-0.5830		0.0000	0.0800
143	Uniform Force	Global Z	-0.5830		0.7400	1.0000
144	Uniform Force	Global Z	-0.5830		0.0000	1.0000
145	Uniform Force	Global Z	-0.5830		0.0000	1.0000
146	Uniform Force	Global Z	-0.5830		0.0000	1.0000
147	Uniform Force	Global Z	-0.5830		0.0000	0.9400
148	Uniform Force	Global Z	-0.5830		0.6700	1.0000
149	Uniform Force	Global Z	-0.5830		0.0000	1.0000

LOAD CASE DC2 Back Span, Member Loads

Member	Type	Direction	Magnitude at Start (kips or kips-ft)	Magnitude at End (kips or kips-ft)	Start Position (x/L)	End Position from start (x/L)
150	Uniform Force	Global Z	-0.5830		0.0000	1.0000
151	Uniform Force	Global Z	-0.5830		0.0000	1.0000
152	Uniform Force	Global Z	-0.5830		0.0000	0.8000
153	Uniform Force	Global Z	-0.5830		0.6100	1.0000
154	Uniform Force	Global Z	-0.5830		0.0000	1.0000
155	Uniform Force	Global Z	-0.5830		0.0000	1.0000
156	Uniform Force	Global Z	-0.5830		0.0000	1.0000
157	Uniform Force	Global Z	-0.5830		0.0000	0.7000

LOAD CASE DC2_Back Span, Joint Loads

Joint	X-Force (kips)	Y-Force (kips)	Z-Force (kips)	X-Moment (kips-ft)	Y-Moment (kips-ft)	Z-Moment (kips-ft)
28	0.0000	0.0000	-13.9000	0.0000	0.0000	0.0000
55	0.0000	0.0000	-34.7000	0.0000	0.0000	0.0000
57	0.0000	0.0000	-5.9000	0.0000	0.0000	0.0000
131	0.0000	0.0000	-6.5000	0.0000	0.0000	0.0000
161	0.0000	0.0000	-9.1000	0.0000	0.0000	0.0000

Result Cases Summary

Mode Shapes: M1: f = 0.85, t = 1.1777
No information is available for mode shapes.

Mode Shapes: M2: f = 1.1, t = 0.9092
No information is available for mode shapes.

Mode Shapes: M3: f = 1.98, t = 0.5048
No information is available for mode shapes.

Mode Shapes: M4: f = 2.21, t = 0.4524
No information is available for mode shapes.

Mode Shapes: M5: f = 2.32, t = 0.4310
No information is available for mode shapes.

Mode Shapes: M6: f = 3.05, t = 0.3276
No information is available for mode shapes.

Mode Shapes: M7: f = 3.6, t = 0.2775

No information is available for mode shapes.

Mode Shapes: M8: f = 3.68, t = 0.2720
No information is available for mode shapes.

Mode Shapes: M9: f = 4.06, t = 0.2462
No information is available for mode shapes.

Mode Shapes: M10: f = 5.56, t = 0.1799
No information is available for mode shapes.

Mode Shapes: M11: f = 5.95, t = 0.1682
No information is available for mode shapes.

Mode Shapes: M12: f = 6.1, t = 0.1640
No information is available for mode shapes.

Mode Shapes: M13: f = 6.14, t = 0.1629
No information is available for mode shapes.

Mode Shapes: M14: f = 6.51, t = 0.1535
No information is available for mode shapes.

Mode Shapes: M15: f = 6.6, t = 0.1514
No information is available for mode shapes.

Mode Shapes: M16: f = 6.95, t = 0.1438
No information is available for mode shapes.

Mode Shapes: M17: f = 7.03, t = 0.1423
No information is available for mode shapes.

Mode Shapes: M18: f = 7.61, t = 0.1314
No information is available for mode shapes.

Mode Shapes: M19: f = 7.71, t = 0.1297
No information is available for mode shapes.

Mode Shapes: M20: f = 8.22, t = 0.1217
No information is available for mode shapes.

Mode Shapes: M21: f = 8.36, t = 0.1197
No information is available for mode shapes.

Mode Shapes: M22: f = 8.62, t = 0.1160
No information is available for mode shapes.

Mode Shapes: M23: f = 9.18, t = 0.1089
No information is available for mode shapes.

Mode Shapes: M24: f = 9.23, t = 0.1084
No information is available for mode shapes.

Mode Shapes: M25: f = 9.3, t = 0.1075

No information is available for mode shapes.

Mode Shapes: M26: f = 9.8, t = 0.1020
No information is available for mode shapes.

Mode Shapes: M27: f = 9.88, t = 0.1012
No information is available for mode shapes.

Mode Shapes: M28: f = 10.04, t = 0.0996
No information is available for mode shapes.

Mode Shapes: M29: f = 10.11, t = 0.0989
No information is available for mode shapes.

Mode Shapes: M30: f = 10.13, t = 0.0987
No information is available for mode shapes.

Mode Shapes: M31: f = 10.44, t = 0.0958
No information is available for mode shapes.

Mode Shapes: M32: f = 11.02, t = 0.0907
No information is available for mode shapes.

Mode Shapes: M33: f = 11.73, t = 0.0852
No information is available for mode shapes.

Mode Shapes: M34: f = 11.94, t = 0.0837
No information is available for mode shapes.

Mode Shapes: M35: f = 11.98, t = 0.0835
No information is available for mode shapes.

Mode Shapes: M36: f = 12.69, t = 0.0788
No information is available for mode shapes.

Mode Shapes: M37: f = 12.99, t = 0.0770
No information is available for mode shapes.

Mode Shapes: M38: f = 13.07, t = 0.0765
No information is available for mode shapes.

Mode Shapes: M39: f = 13.31, t = 0.0752
No information is available for mode shapes.

Mode Shapes: M40: f = 13.89, t = 0.0720
No information is available for mode shapes.

RESULT : Mode Shapes - Frequencies

Mode Shape	Frequency (Hz)	Period (s)	Per Mass X	Per Mass Y	Per Mass Z	Cumulative Per Mass X	Cumulative Per Mass Y	Cumulative Per Mass Z
M1: f = 0.85, t = 1.1777	0.8491	1.1777	0.0000	14.8918	0.0001	0.0000	14.8918	0.0001
M2: f = 1.1, t = 0.9092	1.0999	0.9092	0.0000	21.1953	0.0000	0.0000	36.0871	0.0001

RESULT : Mode Shapes - Frequencies

Mode Shape	Frequency (Hz)	Period (s)	Per Mass X	Per Mass Y	Per Mass Z	Cumulative Per Mass X	Cumulative Per Mass Y	Cumulative Per Mass Z
M3: f = 1.98, t = 0.5048	1.9811	0.5048	0.0007	37.2190	0.0001	0.0007	73.3060	0.0002
M4: f = 2.21, t = 0.4524	2.2106	0.4524	82.6701	0.0000	1.4520	82.6708	73.3061	1.4522
M5: f = 2.32, t = 0.4310	2.3203	0.4310	0.0021	6.9444	0.0000	82.6729	80.2505	1.4522
M6: f = 3.05, t = 0.3276	3.0526	0.3276	8.3827	0.0000	22.0606	91.0556	80.2505	23.5128
M7: f = 3.6, t = 0.2775	3.6034	0.2775	0.0000	3.6137	0.0000	91.0556	83.8642	23.5128
M8: f = 3.68, t = 0.2720	3.6771	0.2720	0.0000	0.7188	0.0003	91.0556	84.5830	23.5131
M9: f = 4.06, t = 0.2462	4.0615	0.2462	0.0000	2.8641	0.0001	91.0556	87.4472	23.5133
M10: f = 5.56, t = 0.1799	5.5601	0.1799	0.0000	0.2495	0.0000	91.0556	87.6967	23.5133
M11: f = 5.95, t = 0.1682	5.9456	0.1682	0.0000	1.1932	0.0000	91.0556	88.8898	23.5133
M12: f = 6.1, t = 0.1640	6.0976	0.1640	0.2263	0.0001	7.8992	91.2820	88.8899	31.4125
M13: f = 6.14, t = 0.1629	6.1390	0.1629	0.0000	0.3240	0.0012	91.2820	89.2139	31.4137
M14: f = 6.51, t = 0.1535	6.5132	0.1535	0.0061	2.5847	0.8166	91.2881	91.7986	32.2303
M15: f = 6.6, t = 0.1514	6.6030	0.1514	0.0004	0.0501	10.2773	91.2885	91.8488	42.5076
M16: f = 6.95, t = 0.1438	6.9534	0.1438	2.4044	0.0371	7.9748	93.6929	91.8858	50.4825
M17: f = 7.03, t = 0.1423	7.0294	0.1423	0.2632	0.1012	20.0920	93.9561	91.9870	70.5744
M18: f = 7.61, t = 0.1314	7.6089	0.1314	0.0000	0.3574	0.0022	93.9561	92.3444	70.5766
M19: f = 7.71, t = 0.1297	7.7091	0.1297	0.0000	0.0520	0.0008	93.9562	92.3964	70.5775
M20: f = 8.22, t = 0.1217	8.2203	0.1217	0.0739	2.9900	0.3913	94.0300	95.3864	70.9688
M21: f = 8.36, t = 0.1197	8.3563	0.1197	2.2343	0.1759	0.5072	96.2643	95.5622	71.4760
M22: f = 8.62, t = 0.1160	8.6230	0.1160	0.3355	0.0827	1.8117	96.5997	95.6449	73.2877
M23: f = 9.18, t = 0.1089	9.1810	0.1089	0.0902	0.0040	4.3494	96.6900	95.6490	77.6371
M24: f = 9.23, t = 0.1084	9.2279	0.1084	0.0000	0.0071	0.0002	96.6900	95.6561	77.6373
M25: f = 9.3, t = 0.1075	9.2990	0.1075	0.0000	0.0505	0.0000	96.6900	95.7067	77.6374
M26: f = 9.8, t = 0.1020	9.8011	0.1020	0.0000	0.3685	0.0000	96.6900	96.0751	77.6374
M27: f = 9.88, t = 0.1012	9.8792	0.1012	0.0001	0.0200	0.0000	96.6901	96.0951	77.6374
M28: f = 10.04, t = 0.0996	10.0374	0.0996	0.0461	0.0003	0.1261	96.7362	96.0954	77.7635
M29: f = 10.11, t = 0.0989	10.1112	0.0989	0.0006	0.5093	0.0023	96.7369	96.6047	77.7658
M30: f = 10.13, t = 0.0987	10.1275	0.0987	0.0473	0.0003	0.1209	96.7842	96.6050	77.8867
M31: f = 10.44, t = 0.0958	10.4365	0.0958	0.0077	0.0041	0.4887	96.7919	96.6090	78.3755
M32: f = 11.02, t = 0.0907	11.0209	0.0907	0.0000	0.0298	0.0000	96.7919	96.6388	78.3755
M33: f = 11.73, t = 0.0852	11.7335	0.0852	0.0000	0.0018	0.0000	96.7919	96.6407	78.3755
M34: f = 11.94, t = 0.0837	11.9433	0.0837	0.0000	0.0307	0.0000	96.7919	96.6713	78.3755
M35: f = 11.98, t = 0.0835	11.9798	0.0835	0.0000	0.0019	0.0000	96.7919	96.6732	78.3755
M36: f = 12.69, t = 0.0788	12.6868	0.0788	0.0000	0.0490	0.0000	96.7919	96.7222	78.3755

RESULT : Mode Shapes - Frequencies

Mode Shape	Frequency (Hz)	Period (s)	Per Mass X	Per Mass Y	Per Mass Z	Cumulative Per Mass X	Cumulative Per Mass Y	Cumulative Per Mass Z
M37: f = 12.99, t = 0.0770	12.9915	0.0770	0.0000	0.0040	0.0000	96.7919	96.7263	78.3755
M38: f = 13.07, t = 0.0765	13.0718	0.0765	0.0136	0.0011	0.3127	96.8055	96.7274	78.6882
M39: f = 13.31, t = 0.0752	13.3065	0.0752	0.0000	0.0084	0.0000	96.8055	96.7359	78.6882
M40: f = 13.89, t = 0.0720	13.8947	0.0720	0.0000	0.0024	0.0000	96.8055	96.7383	78.6882

FIGG	Project FIU	Date 10-28-16	Page 1 Of 1
	Project Number 2262.03	Designed EDL	
	Description FREQUENCY ANALYSIS	Checked	

PER LRFD GUIDE SPECIFICATIONS FOR THE DESIGN OF PEDESTRIAN BRIDGES CHAPTER 6:

REQUIRED VERTICAL FREQUENCY > 3.0 Hz

REQUIRED LATERAL FREQUENCY > 1.3 Hz

- FROM OUR LARSA FREQUENCY MODEL, WE FOUND THAT THE FIRST VERTICAL MODE SHAPE HAPPENED AT MODE 6:

$f_{VERT\_PROVIDED} = 3.05$ Hz > 3.0 Hz $\therefore$ OK,,

- THE FIRST CONSIDERABLE JUMP IN COMULATIVE PER MASS IN THE LATERAL DIRECTION (TRANSVERSE) OCCURS AT MODE 3:

$f_{LATERAL\_PROVIDED} = 1.98$ Hz > 1.3 Hz $\therefore$ OK,,

Eigenvalue analysis can be performed on the undeformed state of the structure or on the deformed state of the structure after loading. We will first compute the modes in its undeformed state.

- Open Analysis # Eigenvalue / Response Spectrum Analysis.
- Click the Eigenvalue option and set the number of modes to 100. Then run the analysis.
- After the analysis completes, open Results # Spreadsheets # Eigenvalue # Frequencies.
- Scroll to the bottom and ensure that the mass particulation ("Cumulative Per Mass") is at least 85% in each axis. The values are given as percents.

When the mass participation is not high enough, more modes must be computed.

- Explore the computed mode shapes graphically. Turn on graphical mode shapes with Results # Graphical # Deformed Model. Click a mode shape in the Analysis Results Explorer within the Mode Shapes group. You may need to increase the display scale using the slider at the bottom of the Analysis Results Explorer.

The 12th mode of the structure described in Advanced Training Manual for Bridge Projects [in *LARSA 4D Advanced Training Manual for Bridge Projects*] is shown below.

The Structure's 12th Mode (f=4.73 Hz)

- Turn off graphical mode shapes when done.

Response Spectrum Analysis

There are two ways to perform a Response Spectrum Analysis. In the first method that we will describe, the analysis is performed on the complete model without regard to loading or construction activities.

- In the Load Cases Explorer, add two new load cases. Right-click each and choose Properties, change their names to RSA1 and RSA2 and their types to Response Spectra.
- Double-click the first case and change to the RSA Loads tab.
- Set the Response-Spectrum Curve in Directions 1 and 2 to the generated curve connected to the project earlier.

The name of the curve that appears in this spreadsheet will depend on how the curve was created earlier. However, you should only have one curve at this point so it will be clear what to choose.

- Set the Scale in Direction 1 to 1.0 and the Scale in Direction 2 to 0.3, according to Article 3.10.8.

4—FATIGUE

4.1—RESISTANCE

The fatigue resistance for steel components and details shall be as specified in *AASHTO LRFD*, Article 6.6.1.2.5 for the Fatigue I load combination. For round HSS components and details not covered in *AASHTO LRFD*, the nominal fatigue resistance may be taken from Table 11.3 of *AASHTO Signs* or Figure 2.13 of AWS D1.1 *Structural Welding Code—Steel*. For square and rectangular HSS components and details, the nominal fatigue resistance may be taken from the provisions of the Design Guide 8 of the International Committee for the Development and Study of Tubular Structures (CIDECT).

The fatigue resistance for steel reinforcement in concrete structures shall be as specified in *AASHTO LRFD* Article 5.5.3.

C4.1

CIDECT Design Guides are a foreign specification available through the AISC. See Zhao et al., 2001.

4.2—FRACTURE

Except as specified herein, all of the provisions specified in Article 6.6.2 of *AASHTO LRFD* relating to Charpy V-notch (CVN) fracture toughness requirements, including Fracture Critical Member (FCM) and Main Member designation, shall apply to steel pedestrian bridges. Design of tubular members shall also satisfy the provisions of Article 8.2. If supported by the characteristics of the site and application, the Owner may waive the FCM requirements, including Article 8.2.3 of these specifications.

C4.2

For pedestrian bridges crossing low-volume traffic waterways and roads, or areas not accessible to the general public, FCM treatment may not be appropriate.

5—DEFLECTIONS

Deflections should be investigated at the service limit state using load combination Service I in Table 3.4.1-1 of *AASHTO LRFD*. For spans other than cantilever arms, the deflection of the bridge due to the unfactored pedestrian live loading shall not exceed 1/360 of the span length. Deflection in cantilever arms due to the pedestrian live loading shall not exceed 1/220 of the cantilever length. Horizontal deflections under unfactored wind loading shall not exceed 1/360 of the span length.

C5

Table 2.5.2.6.3-1 of *AASHTO LRFD* contains guidance on span-to-depth ratios that may be invoked by an Owner.

The 1/360 criteria is consistent with the increased pedestrian loading compared to previous versions of AASHTO pedestrian bridge guidance. See also Article 2.5.2.6.2 of *AASHTO LRFD* for bridges carrying both roadway and pedestrian traffic.

6—VIBRATIONS

Unless waived by the Owner, vibrations shall be investigated as a service limit state using load combination Service I in Table 3.4.1-1 of *AASHTO LRFD*. Vibration of the structure shall not cause

C6

Due to the vibration problems experienced in London on the Millennium bridge, there have been many publications in the technical literature, primarily in Europe, on this topic. Despite this large body of

© 2009 by the American Association of State Highway and Transportation Officials.
All rights reserved. Duplication is a violation of applicable law.

discomfort or concern to users of a pedestrian bridge. Except as specified herein, the fundamental frequency in a vertical mode of the pedestrian bridge without live load shall be greater than 3.0 hertz (Hz) to avoid the first harmonic. In the lateral direction, the fundamental frequency of the pedestrian bridge shall be greater than 1.3 Hz. If the fundamental frequency cannot satisfy these limitations or if the second harmonic is a concern, an evaluation of the dynamic performance shall be made. This evaluation shall consider:

- The frequency and magnitude of pedestrian footfall loadings
- The phasing of loading from multiple pedestrians on the bridge at the same time, including the "lock-in" phenomena
- Appropriate estimation of structural damping
- Frequency-dependent limits on acceleration and/or velocity

In lieu of such evaluation in the vertical direction, the bridge may be proportioned such that either of the following criteria are satisfied:

$$f \geq 2.86 \ln\left(\frac{180}{W}\right) \qquad (6\text{-}1)$$

or

$$W \geq 180 e^{(-0.35f)} \qquad (6\text{-}2)$$

where:

W = the weight of the supported structure, including only dead load (kips)

f = the fundamental frequency in the vertical direction (Hz)

knowledge, it does not appear there has been convergence toward one method of evaluation, or development of any specification that adequately covers this issue.

These provisions address the issue of vibration from two directions: maintaining a minimum natural vibration frequency above those induced by pedestrians, and specifying a minimum weight to limit vibration amplitudes if the frequency limits are not met. Although somewhat outdated, both of these approaches are still viable and have the great advantage of simplicity.

The technical guide published by SETRA (Service d'Etudes Techniques des Routes et Autoroutes) (2006) appears to present a relatively straightforward method for addressing vibration issues when the frequencies of the bridge fall within the pacing frequencies of pedestrians.

The "lock-in" phenomenon refers to the tendency of people to synchronize their pacing frequency to the lateral frequency of the bridge when the lateral displacements begin to grow. In other words, instead of random frequencies and phasing among the loading from pedestrians on the bridge, the frequencies and phases becomes fully correlated with the bridge motion.

7—STABILITY

7.1—HALF-THROUGH TRUSSES

7.1.1—Lateral Frame Design Force

The vertical truss members, the floorbeams, and their connections shall be proportioned to resist a lateral force applied at the top of the truss verticals. The lateral force shall not be less than $0.01/K$ times the average factored design compressive force in the two adjacent top chord members, where K is the design effective length factor for the individual top chord members supported between the truss verticals. In no case shall the value for $0.01/K$ be less than 0.003 when

C7.1.1

This article modifies the provisions of *AASHTO LRFD* by replacing the 300 pounds per linear foot design requirement for truss verticals with provisions based on research reported in Galambos (1998). These provisions establish the minimum lateral strength of the verticals based on the degree of lateral support necessary for the top chord to resist the maximum design compressive force.

© 2009 by the American Association of State Highway and Transportation Officials.
All rights reserved. Duplication is a violation of applicable law.

X. FINITE ELEMENT ANALYSIS

X. FINITE ELEMENT ANALYSIS

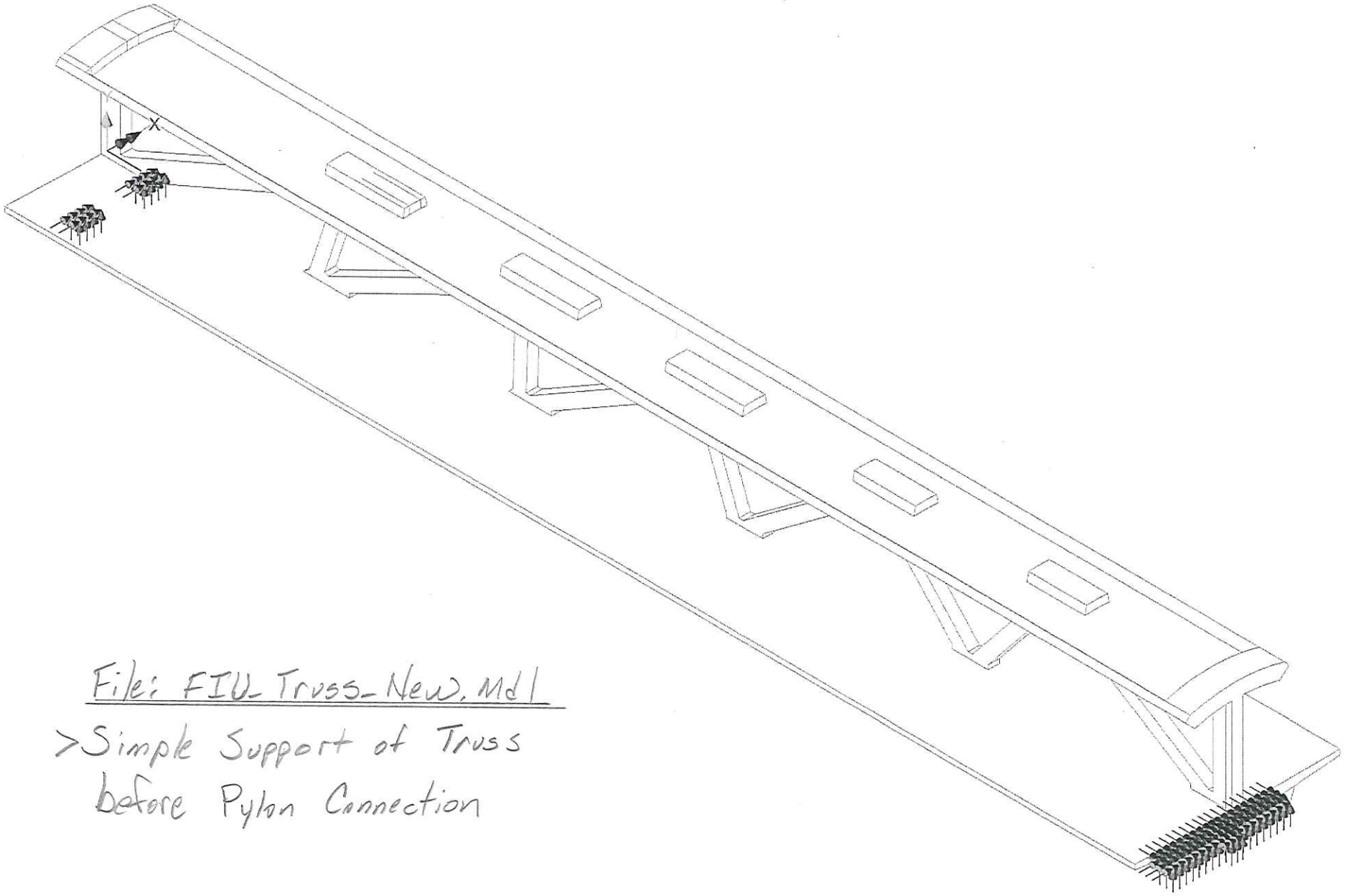

File: FIU_Truss_New.Mdl

>Simple Support of Truss before Pylon Connection

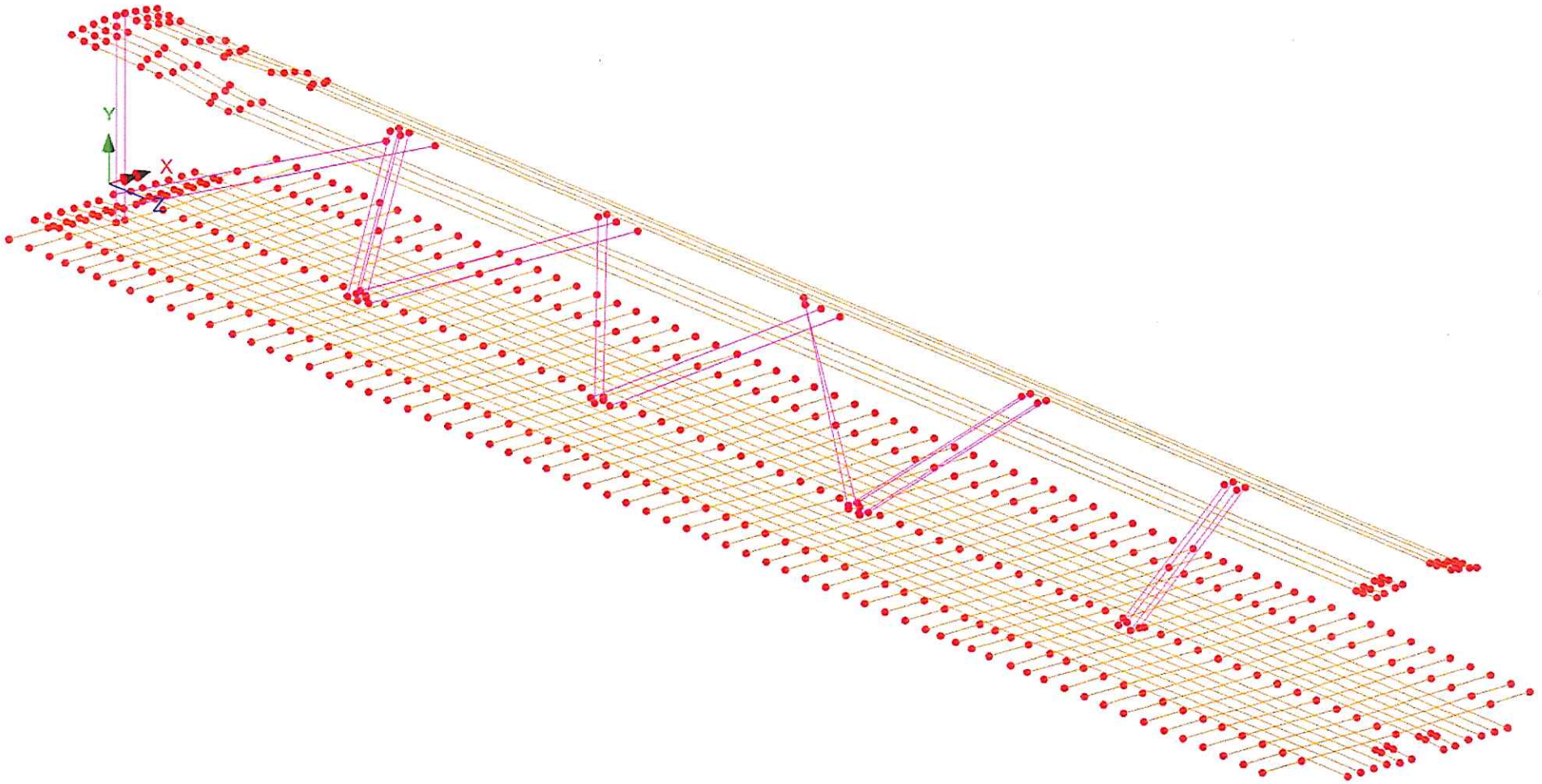

General Model PT-Paths

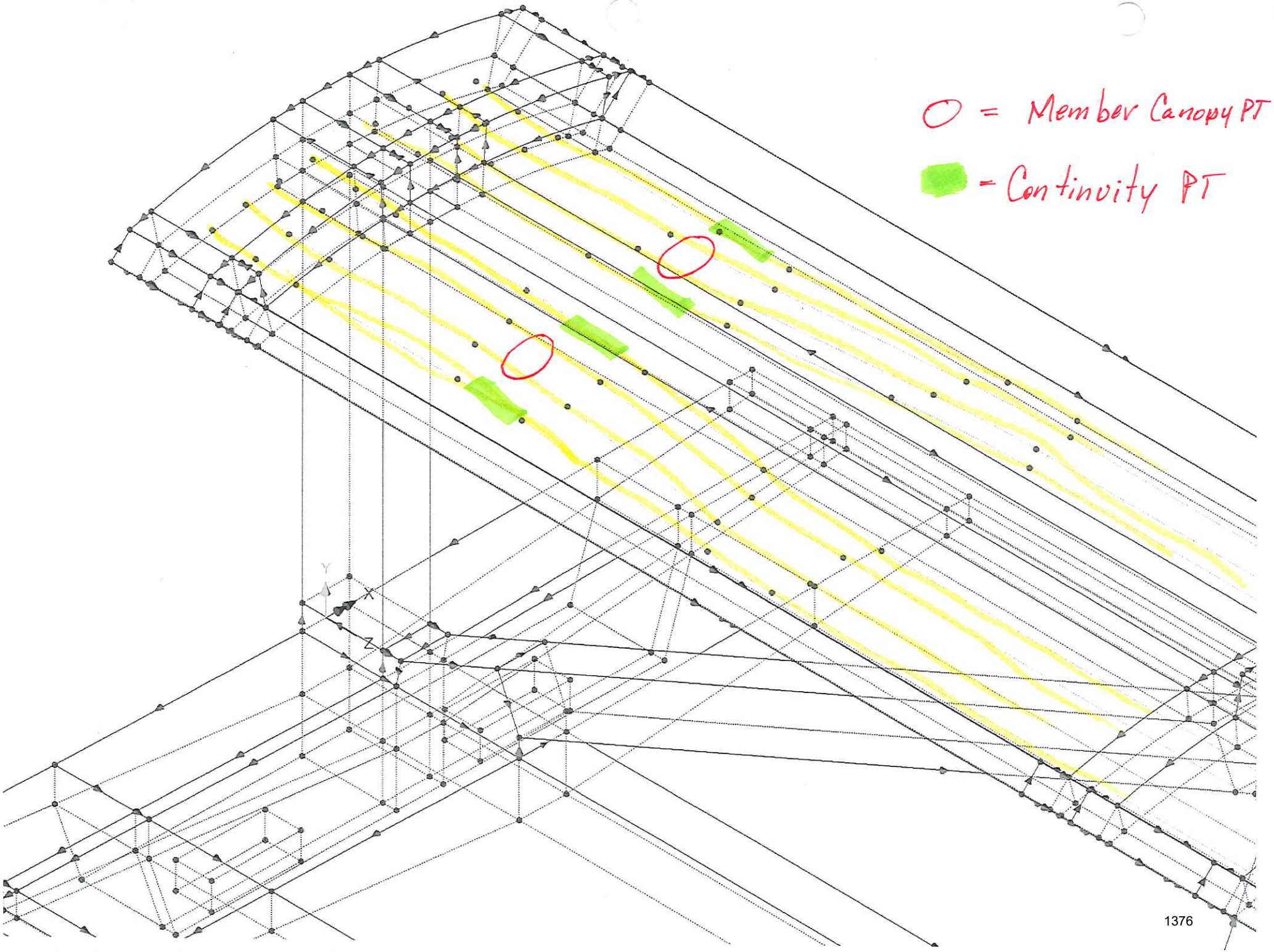
O = Member Canopy PT
= Continuity PT
Y
X
Z

Material Properties - Superstructure

$kips := 1000 \cdot lb$ $klf := \frac{kips}{ft}$ $psf := \frac{lb}{ft^2}$ $psi := \frac{lb}{in^2}$ ORIGIN ≡ 1

$kslug := 1000 \cdot slug$ $g_c := 32.174049 \cdot \frac{ft}{s^2}$ $g = 32.174 \cdot \frac{ft}{s^2}$

C.I.P. SUPERSTRUCTURE CONCRETE - 8500 psi:

1. Concrete Design Strength:

$f'c := 8.500 \cdot ksi$

2. Modulus of Elasticity:

According to AASHTO LRFD, section 5.4.2.4

$k_1 := 1$ According to Design Criteria for Concrete Wc = .150 kcf

$W_c := .150$

$E := 33000 \cdot k_1 \cdot W_c^{1.5} \cdot \sqrt{\frac{f'c}{ksi}}$ $E = 5589.3\ ksi$ (804859.2 ksf)

3. Poisson's Ratio and Thermal Expansion Coefficient:

$\upsilon := 0.2$ AASHTO LRFD 5.4.2.5

$\alpha := 0.000006 \frac{1}{F}$ AASHTO LRFD 5.4.2.2

4. Concrete Density (kslugs):

$W_c := 0.150 \cdot \frac{kips}{ft^3}$ $\rho_{lusas} := .0046662 \frac{kslug}{ft^3}$

$\rho := W_c$ $\rho = 0.004662 \cdot \frac{kslug}{ft^3}$ $W_{lusas} := \frac{\rho_{lusas}}{1000 \cdot lb} \cdot \frac{kips \cdot ft^3}{ft^3}$ $W_{lusas} = 0.15013 \cdot \frac{kips}{ft^3}$

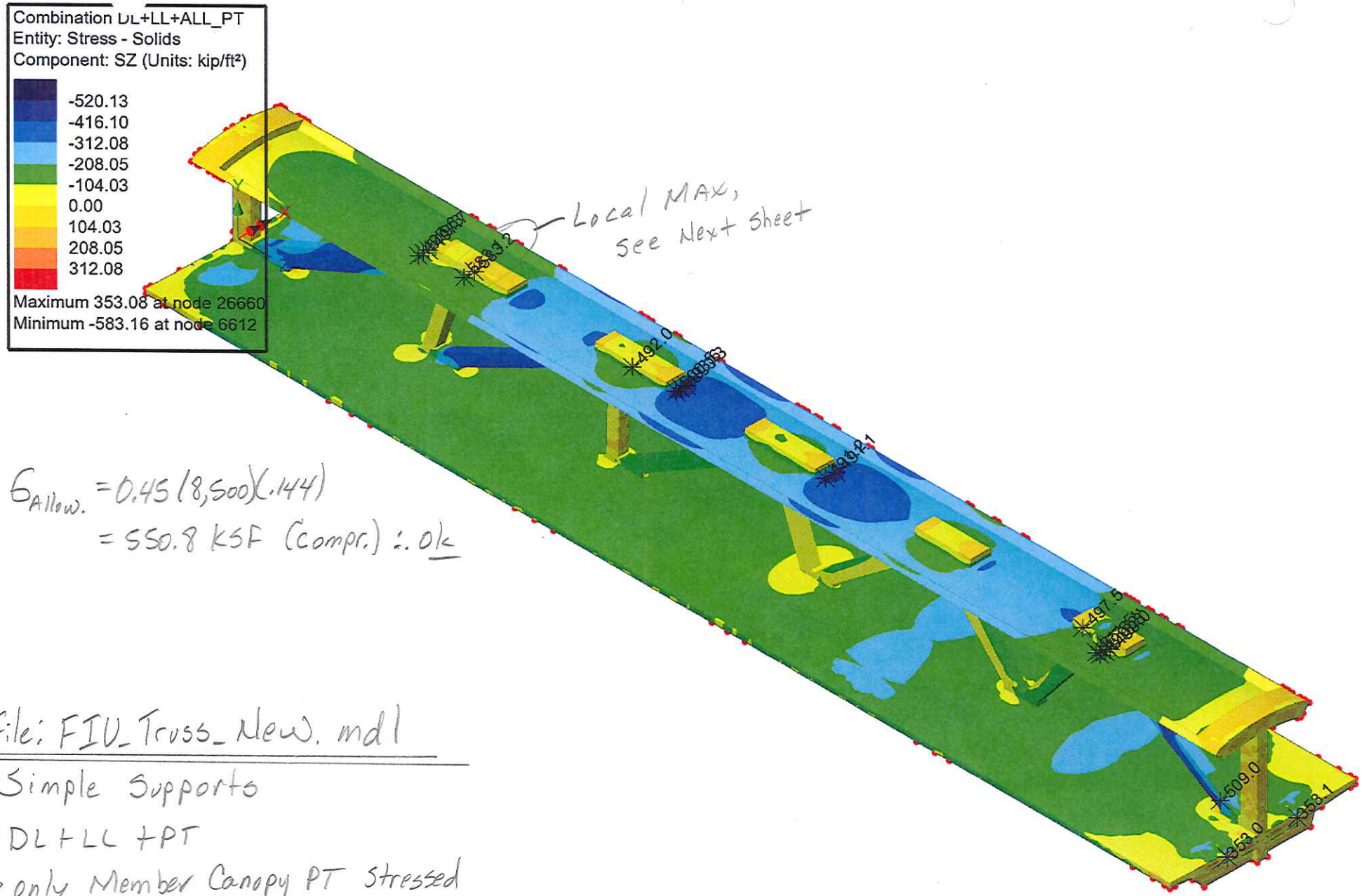

$\sigma_{Allow.} = 0.45(8,500)(.144)$

$= 550.8$ KSF (Compr.) $\therefore$ Ok

File: FIU_Truss_New.mdl

> Simple Supports

> DL+LL+PT

> only Member Canopy PT Stressed

> Used .94 Load factor for Tendons

Used .97 " " " PT-BARS

583.2
583.1
Chamfer @ Node U2 Top
Local Max, Neglect, (edge effect)

Combination DL+LL+ALL_PT
Entity: Displacement
Component: DY (Units: ft)

-1.06"
-0.93"
-0.80"
-0.66"
-0.53"
-0.40"
-0.27"
-0.13"
0.00"

Maximum 0.11" at node 25216
Minimum -1.09" at node 12598

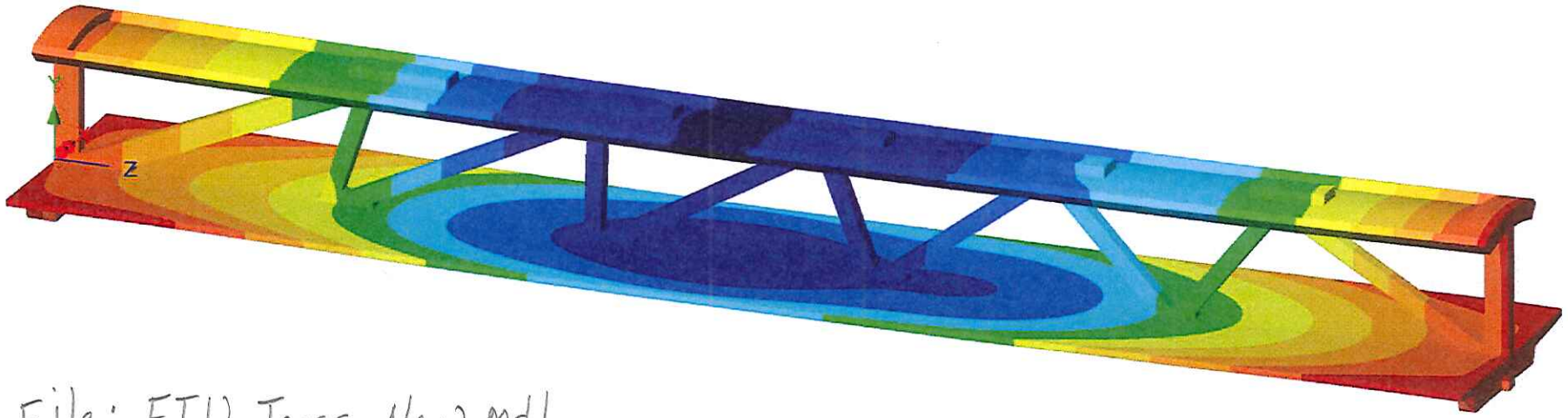

File: FIU_Truss-New.mdl

> Displacements

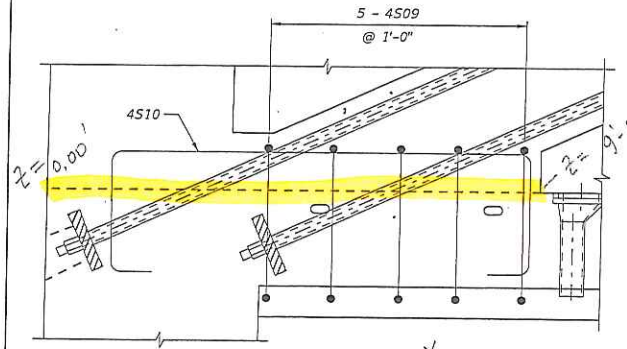

TRUSS MEMBERS 1 & 2
CONNECTION DETAIL

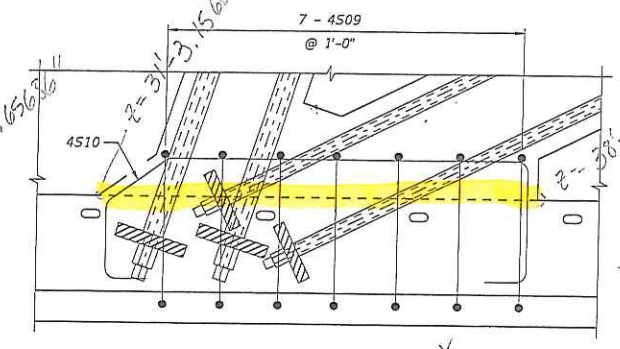

TRUSS MEMBERS 3 & 4
CONNECTION DETAIL

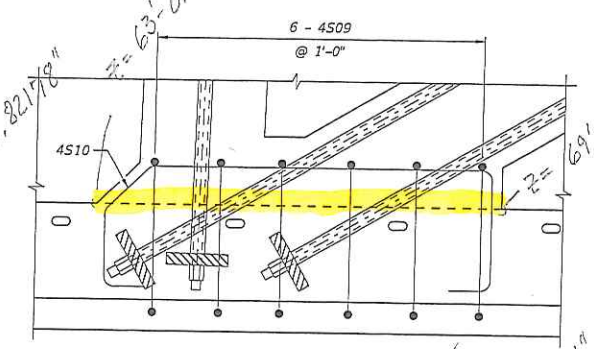

TRUSS MEMBERS 5 & 6
CONNECTION DETAIL

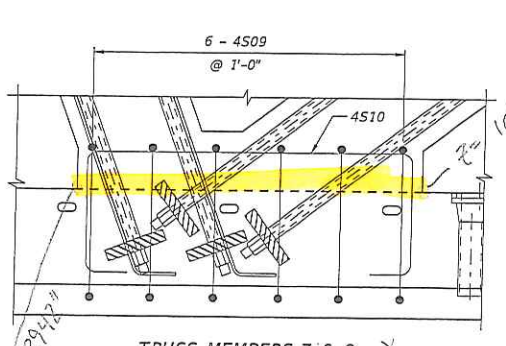

TRUSS MEMBERS 7 & 8
CONNECTION DETAIL

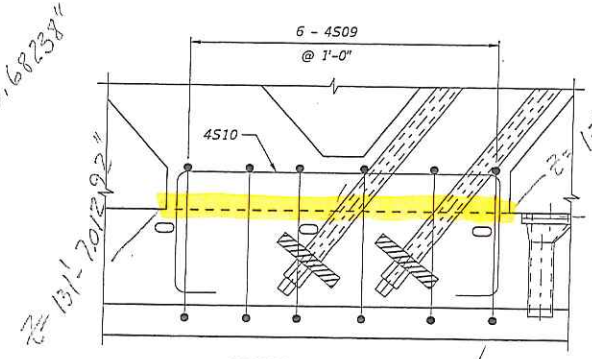

TRUSS MEMBERS 9 & 10
CONNECTION DETAIL

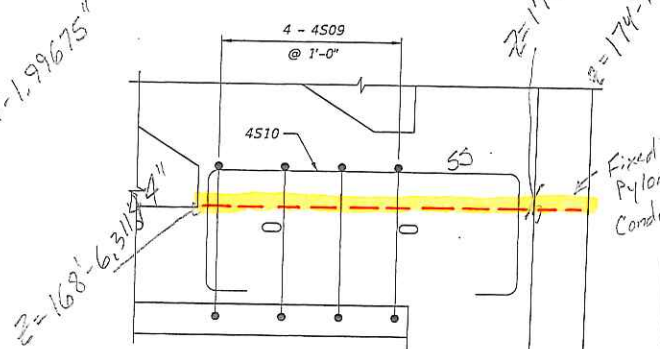

TRUSS MEMBERS 11 & 12
CONNECTION DETAIL

NOTES:

1. FOR ADDITIONAL MAIN SPAN DETAILS, SEE MAIN SPAN TRUSS SYSTEM LAYOUT SHEET.
2. FOR TYPE I DIAPHRAGM DETAILS, SEE DECK END DIAPHRAGM REINFORCEMENT - TYPE I SHEETS.
3. FOR TYPE II DIAPHRAGM DETAILS, SEE DECK END DIAPHRAGM REINFORCEMENT - TYPE II SHEETS.
4. FOR ADDITIONAL TRUSS DETAILS, SEE MAIN SPAN TRUSS SYSTEM DETAIL SHEETS.
5. FOR ADDITIONAL DRAIN PIPE DETAILS, SEE DRAINAGE DETAILS SHEET.
6. CONCRETE COVER IS 2" UNLESS OTHERWISE NOTED. FOR BAR LIST, SEE SUPERSTRUCTURE REINFORCEMENT BAR LIST SHEETS.

= Traction Force location from F.E.

90% SUBMITTAL - NOT FOR CONSTRUCTION - SEPTEMBER 2016

REVISIONS					
DATE	BY	DESCRIPTION	DATE	BY	DESCRIPTION

ENGINEER OF RECORD:
FIGG
424 North Calhoun Street
Tallahassee, Florida 32301
FLORIDA CERTIFICATE OF AUTHORIZATION NO. 5618
W. DENNEY PATE, P.E. - P.E. NO. 34332

DRAWN BY:	DCB
CHECKED BY:	EDL
DESIGNED BY:	EDL
CHECKED BY:	MF

FIU FLORIDA INTERNATIONAL UNIVERSITY

ROAD NO.	COUNTY	PROJECT ID
	MIAMI-DADE	434688-1-58-01

SHEET TITLE: DECK REINF. & TRANSVERSE P.T. - MAIN SPAN (2 OF 2)

PROJECT NAME: UNIVERSITYCITY PROSPERITY PROJECT

SHEET NO. B-61

File: FIU_Truss_New.mdl

Simple Support
Truss Members 1 & 2 Results

LUSAS View: slice_8.txt

```
Slice 1 SLICE PROPERTIES
Total Slice Area          16.28
Ixx about slice x axis     117.5
Iyy about slice y axis     4.156
Ixy about origin          0.000
Global X of centroid       0.1111E-31
Global Y of centroid      -0.1000E-08
Global Z of centroid       4.652
Principal I1 at centroid   117.5
Principal I2 at centroid   4.156
Principal Angle (degrees)  90.00
```

Model info | 7:Combination DL+L

LUSAS View: slice_9.txt

```
Slice 1 SLICE ANALYSIS RESULTS
Results File = D:\LUSAS_Models\FIU\Asso
Loadcase =        7
Fx on slice              0.2078
Fy on slice              930.9
Fz on slice              -1235.
Mxx about slice x axis    -3113.
Myy about slice y axis    -0.7124E-01
Mzz about slice z axis     0.6256E-01
```

Model info | 7:Combination DL+LL+AL

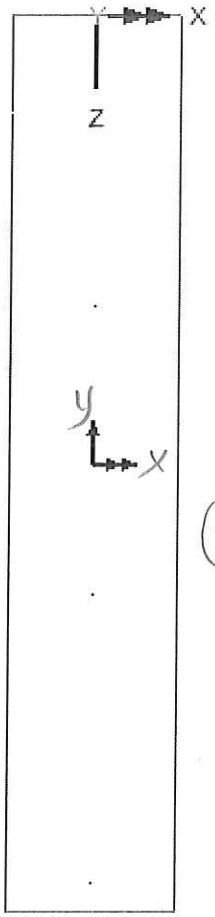

(Z is up)

Simple Support
member 3 & 4 Slice Forces

LUSAS View: slice_10.txt

```
Slice 1 SLICE PROPERTIES
Total Slice Area          12.49
Ixx about slice x axis    53.05
Iyy about slice y axis    3.188
Ixy about origin          0.000
Global X of centroid      -0.1912E-15
Global Y of centroid      -0.1000E-08
Global Z of centroid      34.83
Principal I1 at centroid  53.05
Principal I2 at centroid  3.188
Principal Angle (degrees) 90.00
```

Model info | 7:Combination DL+L

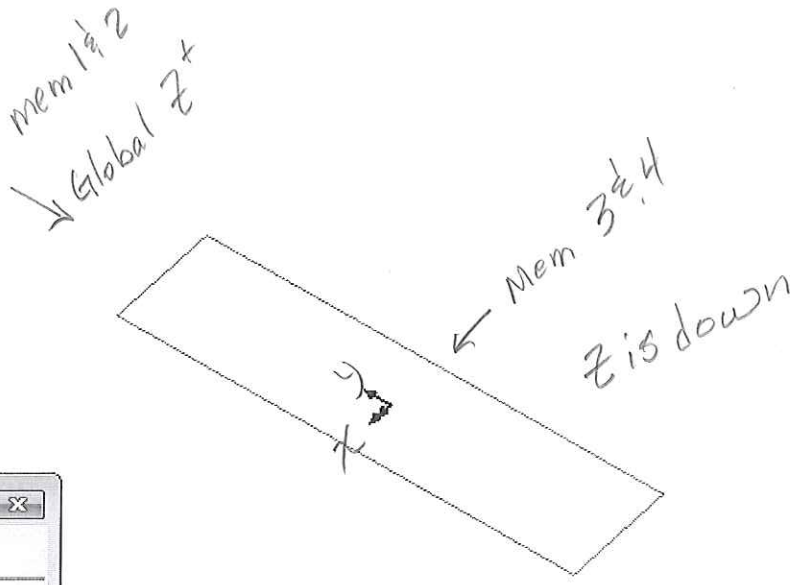

LUSAS View: slice_11.txt

```
Slice 1 SLICE ANALYSIS RESULTS
Results File = D:\LUSAS_Models\FIU\Ass
Loadcase =        7
Fx on slice           0.5430E-02
Fy on slice           -913.0
Fz on slice           -1050.
Mxx about slice x axis    -1529.
Myy about slice y axis    0.2600E-01
Mzz about slice z axis    -0.1701
```

Model info | 7:Combination DL+LL+A

Simple Support

Members 5 & 6

LUSAS View: slice_12.txt

```
Slice 1 SLICE PROPERTIES
Total Slice Area          11.55
Ixx about slice x axis    41.93
Iyy about slice y axis    2.948
Ixy about origin          0.000
Global X of centroid      0.000
Global Y of centroid      -0.1000E-08
Global Z of centroid      66.36
Principal I1 at centroid  41.93
Principal I2 at centroid  2.948
Principal Angle (degrees) 90.00
```

Model info | 7:Combination DL+L

LUSAS View: slice_13.txt

```
Slice 1 SLICE ANALYSIS RESULTS
Results File = D:\LUSAS_Models\FIU\As
Loadcase =      7
Fx on slice          0.2347
Fy on slice          -450.3
Fz on slice          -349.0
Mxx about slice x axis   -450.7
Myy about slice y axis   0.1541
Mzz about slice z axis   -0.3480
```

Model info | 7:Combination DL+LL+

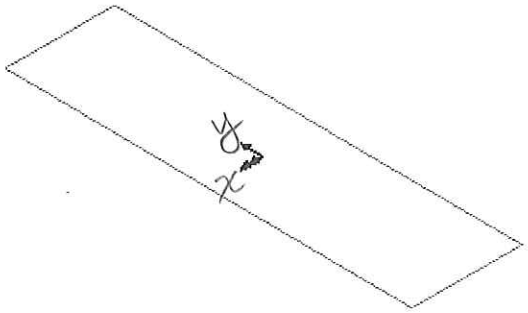

Z down

Simple Span
Members 7 & 8

LUSAS View: slice_14.txt

Slice 1 SLICE PROPERTIES
Total Slice Area 9.916
Ixx about slice x axis 26.53
Iyy about slice y axis 2.531
Ixy about origin 0.000
Global X of centroid 0.000
Global Y of centroid -0.1000E-08
Global Z of centroid 99.47
Principal I1 at centroid 26.53
Principal I2 at centroid 2.531
Principal Angle (degrees) 90.00

Model info | 7:Combination DL+LL

LUSAS View: slice_15.txt

Slice 1 SLICE ANALYSIS RESULTS
Results File = D:\LUSAS_Models\FIU\As:
Loadcase = 7
Fx on slice -0.2412
Fy on slice -10.61
Fz on slice -452.0
Mxx about slice x axis -450.2
Myy about slice y axis -0.1709
Mzz about slice z axis 2.527

Model info | 7:Combination DL+LL+

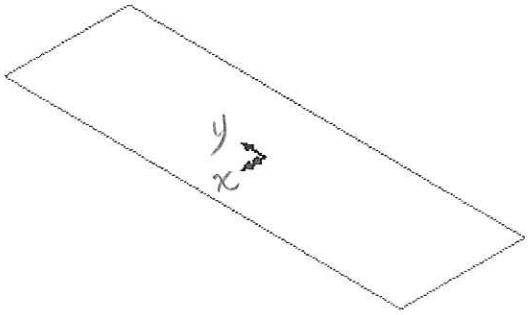

z-down

Simple Support
Members 9 & 10

LUSAS View: FIU_Truss_New.mdl Window 4

LUSAS View: slice_16.txt

```
Slice 1 SLICE PROPERTIES
Total Slice Area          9.768
Ixx about slice x axis    25.36
Iyy about slice y axis    2.493
Ixy about origin          0.000
Global X of centroid      0.000
Global Y of centroid      -0.1000E-08
Global Z of centroid      134.4
Principal I1 at centroid  25.36
Principal I2 at centroid  2.493
Principal Angle (degrees) 90.00
```

Model info | 7:Combination DL+LL-

LUSAS View: slice_17.txt

```
Slice 1 SLICE ANALYSIS RESULTS
Results File = D:\LUSAS_Models\FIU\Associated Mc
Loadcase =        7
Fx on slice       -0.2074E-01
Fy on slice       -278.4
Fz on slice       -823.6
Mxx about slice x axis    273.7
Myy about slice y axis    -0.5765E-01
Mzz about slice z axis    0.1358
```

Model info | 7:Combination DL+LL+ALL_PT

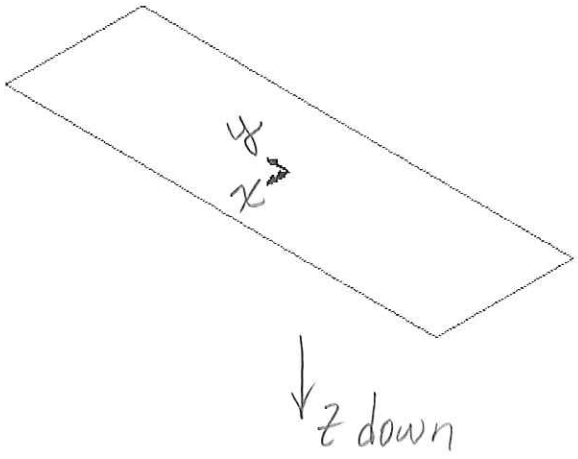

LUSAS View: slice_18.txt

```
Slice 1 SLICE PROPERTIES
Total Slice Area          9.598
Ixx about slice x axis    24.06
Iyy about slice y axis    2.449
Ixy about origin          0.000
Global X of centroid      0.000
Global Y of centroid      -0.1000E-08
Global Z of centroid      171.3
Principal I1 at centroid  24.06
Principal I2 at centroid  2.449
Principal Angle (degrees) 90.00
```

Model info | 7:Combination DL+L

LUSAS View: slice_19.txt

```
Slice 1 SLICE ANALYSIS RESULTS
Results File = D:\LUSAS_Models\FIU\Associ
Loadcase =        7
Fx on slice           -0.2720
Fy on slice           570.9
Fz on slice           -646.7
Mxx about slice x axis    111.4
Myy about slice y axis    -0.6168E-01
Mzz about slice z axis    0.2181
```

Model info | 7:Combination DL+LL+ALL

Simple Support
Members 11 & 12

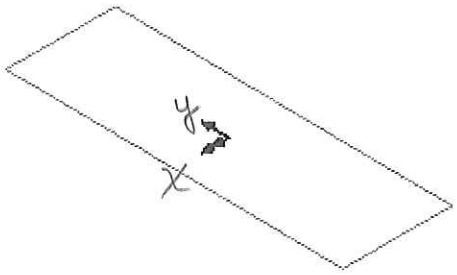

z down

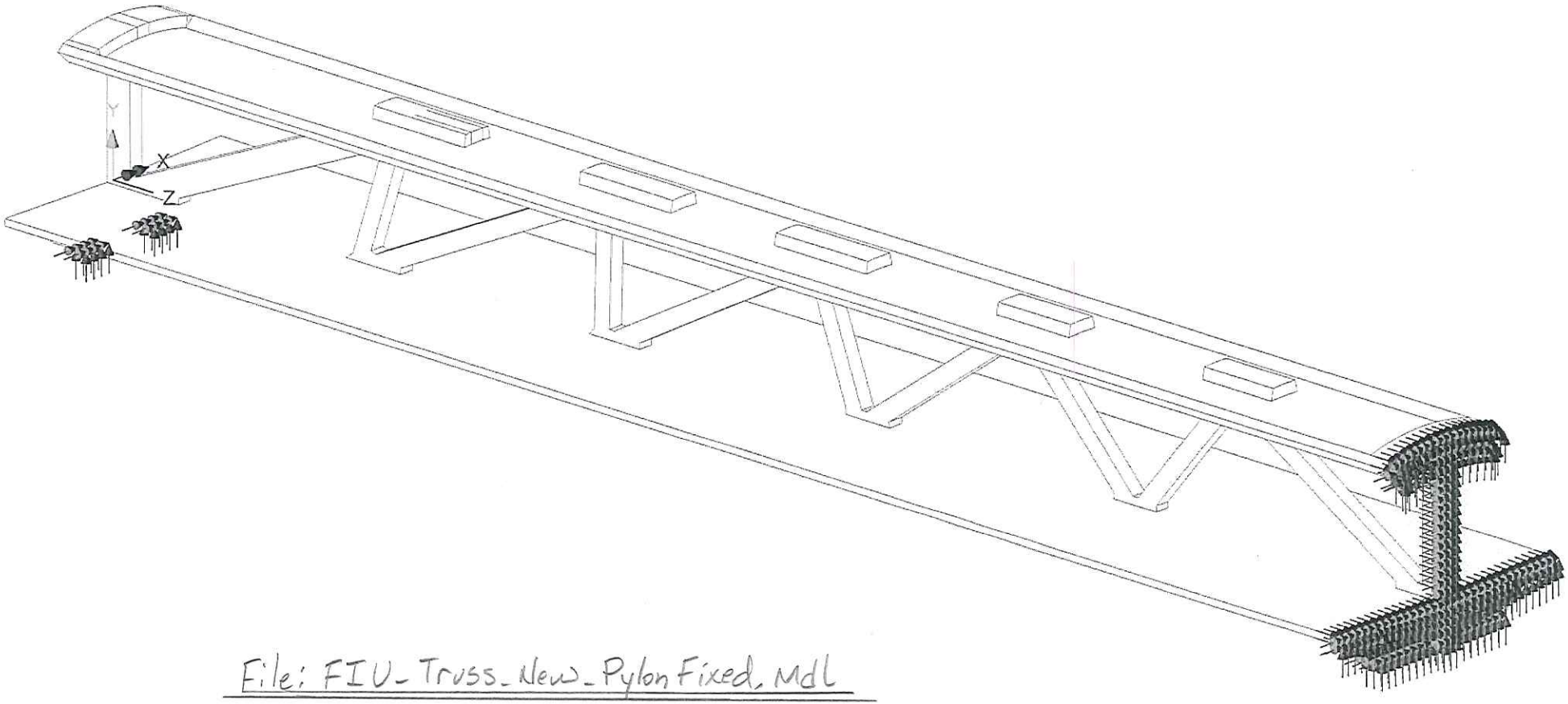

File: FIU_Truss_New_Pylon Fixed. Mdl

> Final Support Condition

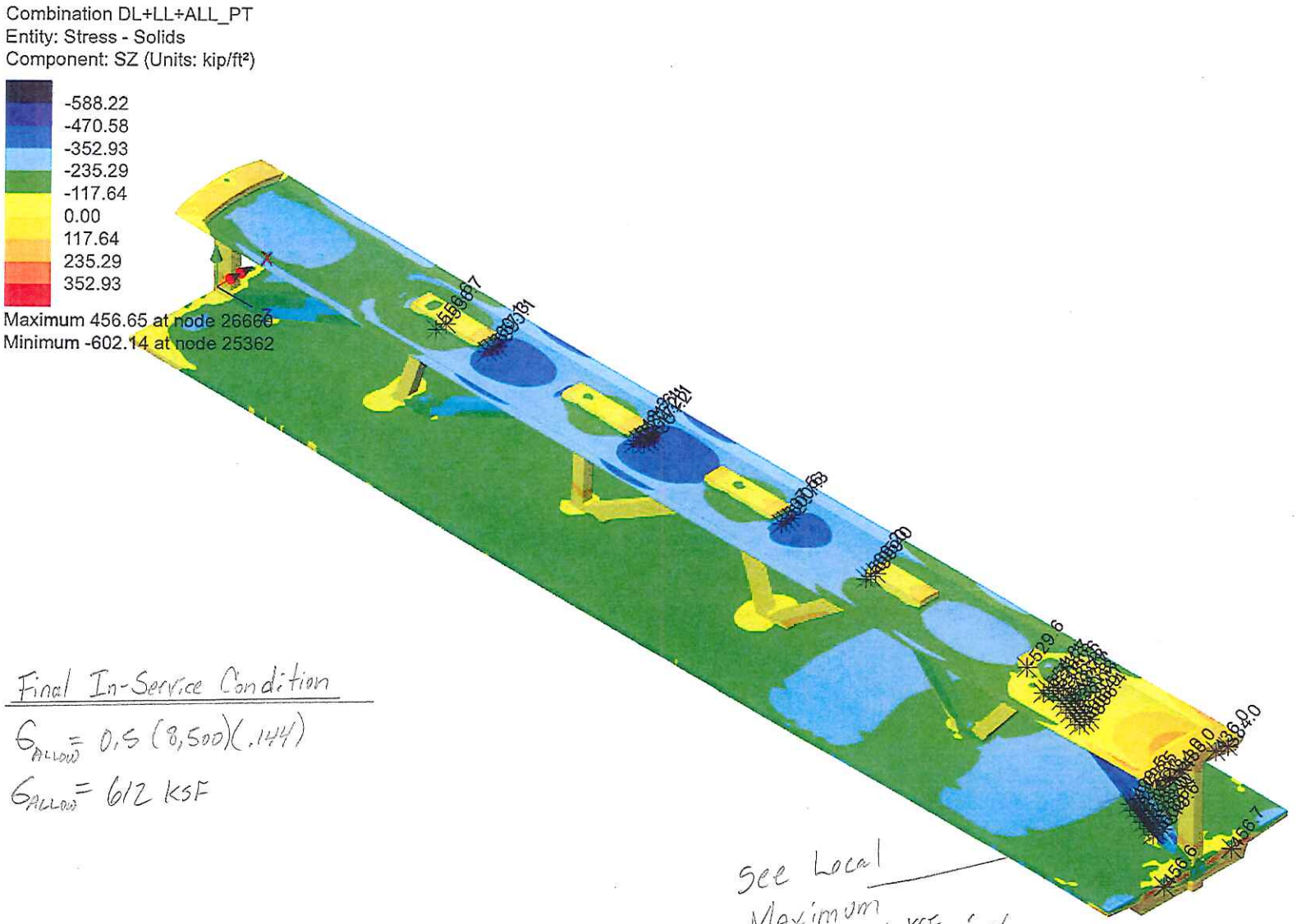

Final In-Service Condition

$\sigma_{ALLOW} = 0.5\,(8{,}500)(.144)$

$\sigma_{ALLOW} = 612$ KSF

See Local

Maximum

$\sigma = -602.1$ KSF ∴ ok

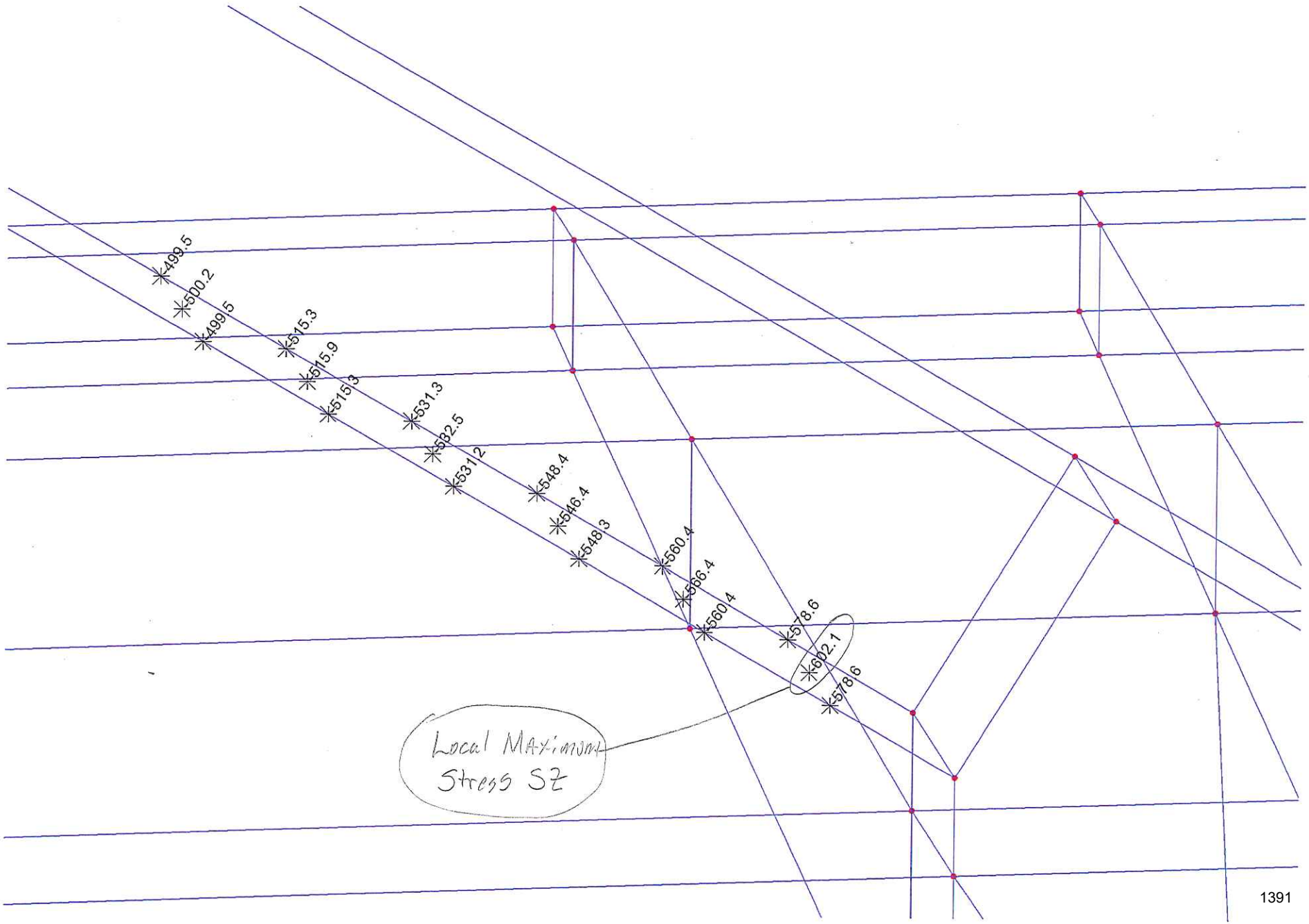
499.5
500.2
499.5
515.3
515.9
515.3
531.3
532.5
531.2
548.4
546.4
548.3
560.4
556.4
560.4
578.6
602.1
578.6
Local Maximum
Stress SZ

Combination DL+LL+ALL_PT
Entity: Displacement
Component: DY (Units: ft)

-0.84"
-0.72"
-0.60"
-0.48"
-0.36"
-0.24"
-0.12"
0
0.12"

Maximum 0.13" at node 24796
Minimum -0.95" at node 12315

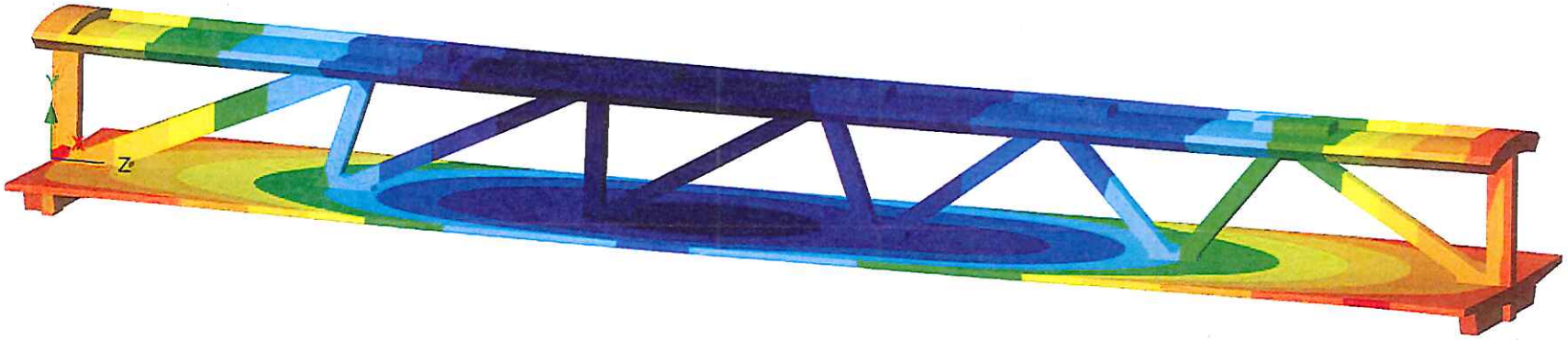

File: FIU_Truss_New_Pylon Fixed.mdl
> E.S. Simple, @ Pylon Fixed for Translation
> DL + LL + PT, ALL Canopy PT Stressed
> Displacement DY

File: FIU_Truss_New_Pylon Fixed.mdl

Members 1 & 2 Results

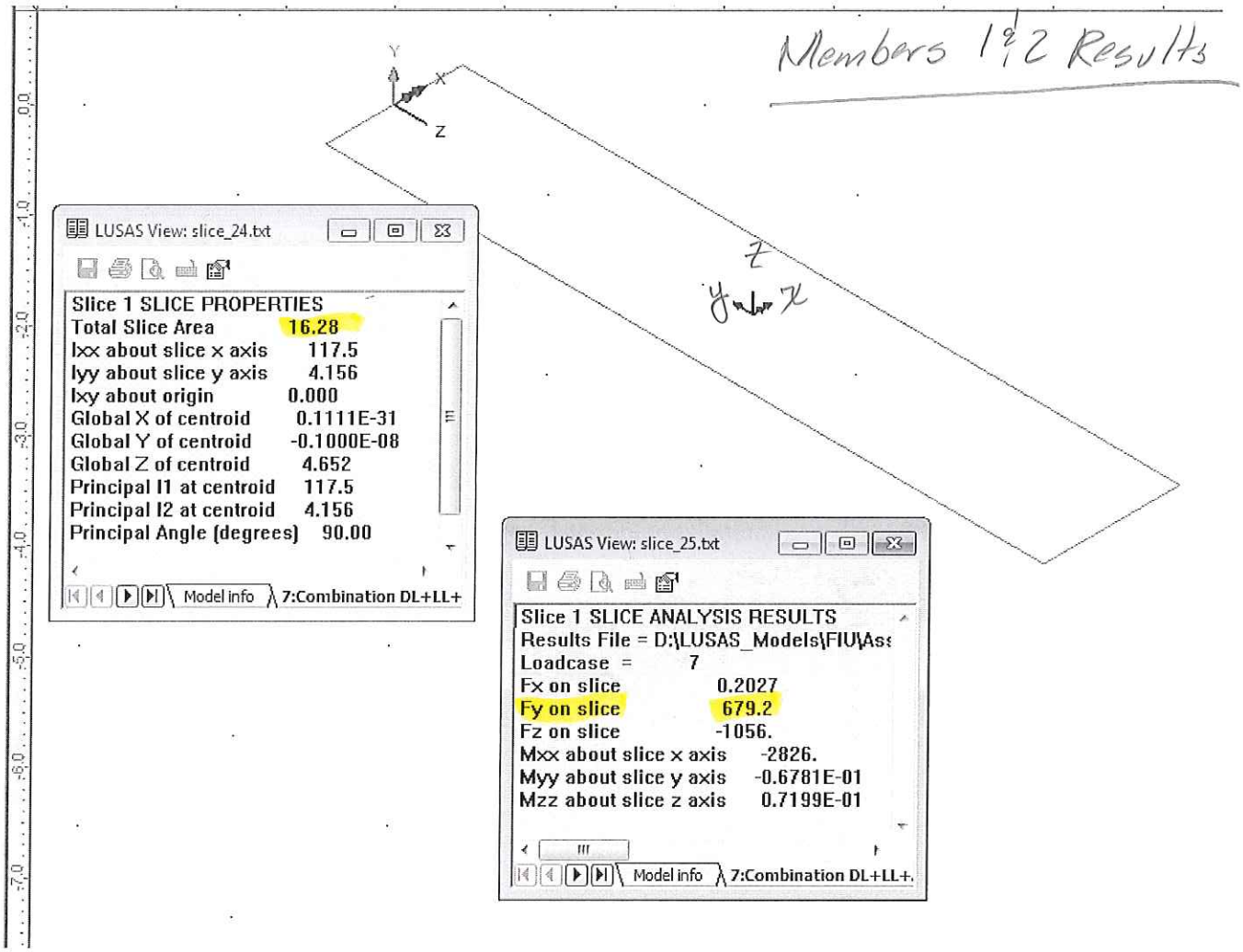

LUSAS View: slice_24.txt

Slice 1 SLICE PROPERTIES	
Total Slice Area	16.28
Ixx about slice x axis	117.5
Iyy about slice y axis	4.156
Ixy about origin	0.000
Global X of centroid	0.1111E-31
Global Y of centroid	-0.1000E-08
Global Z of centroid	4.652
Principal I1 at centroid	117.5
Principal I2 at centroid	4.156
Principal Angle (degrees)	90.00

Model info | 7:Combination DL+LL+

LUSAS View: slice_25.txt

Slice 1 SLICE ANALYSIS RESULTS	
Results File = D:\LUSAS_Models\FIU\As	
Loadcase =	7
Fx on slice	0.2027
Fy on slice	679.2
Fz on slice	-1056.
Mxx about slice x axis	-2826.
Myy about slice y axis	-0.6781E-01
Mzz about slice z axis	0.7199E-01

Model info | 7:Combination DL+LL+

Fixed Pylon

Members 3 & 4

LUSAS View: slice_26.txt

```
Slice 1 SLICE PROPERTIES
Total Slice Area          12.49
Ixx about slice x axis     53.05
Iyy about slice y axis     3.188
Ixy about origin          0.000
Global X of centroid      -0.1912E-15
Global Y of centroid      -0.1000E-08
Global Z of centroid       34.83
Principal I1 at centroid   53.05
Principal I2 at centroid   3.188
Principal Angle (degrees)  90.00
```

Model info | 7:Combination DL+L

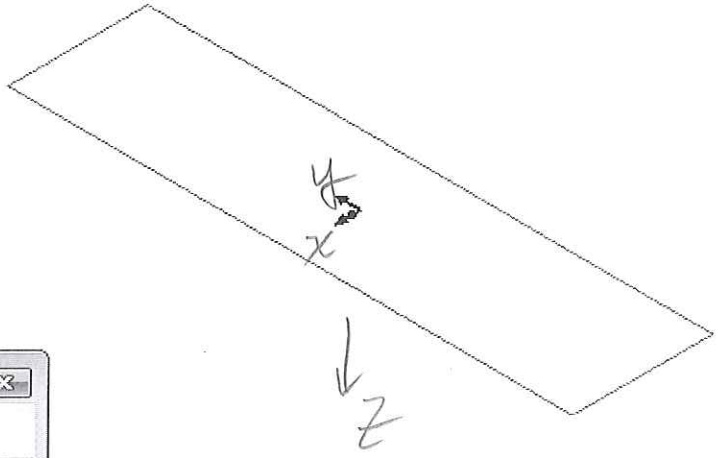

LUSAS View: slice_27.txt

```
Slice 1 SLICE ANALYSIS RESULTS
Results File = D:\LUSAS_Models\FIU\Associ
Loadcase =        7
Fx on slice          0.6470E-02
Fy on slice          -731.2
Fz on slice          -1036.
Mxx about slice x axis     -1643.
Myy about slice y axis     0.2663E-01
Mzz about slice z axis     -0.1736
```

Model info | 7:Combination DL+LL+ALL

Fixed Pylon

Members 5 & 6

LUSAS View: slice_28.txt

Slice 1 SLICE PROPERTIES	
Total Slice Area	11.55
Ixx about slice x axis	41.93
Iyy about slice y axis	2.948
Ixy about origin	0.000
Global X of centroid	0.000
Global Y of centroid	-0.1000E-08
Global Z of centroid	66.36
Principal I1 at centroid	41.93
Principal I2 at centroid	2.948
Principal Angle (degrees)	90.00

Model info | 7:Combination DL-

LUSAS View: slice_29.txt

Slice 1 SLICE ANALYSIS RESULTS	
Results File = D:\LUSAS_Models\FIU	
Loadcase =	7
Fx on slice	0.2389
Fy on slice	-250.4
Fz on slice	-331.7
Mxx about slice x axis	-634.3
Myy about slice y axis	0.1568
Mzz about slice z axis	-0.3512

Model info | 7:Combination DL-

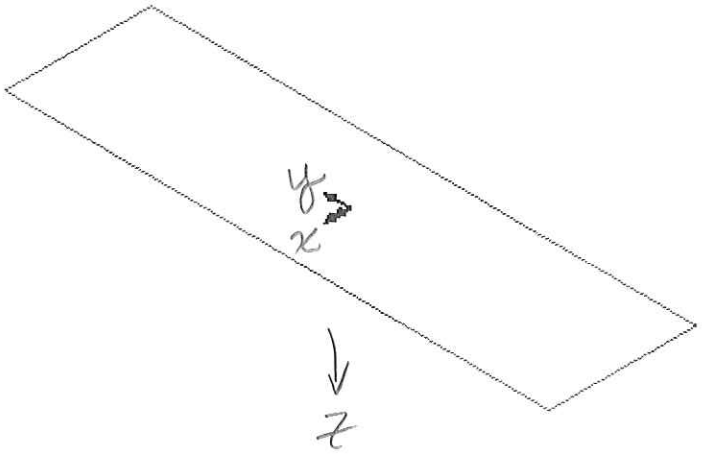

Fixed Pylon
Members 7 & 8

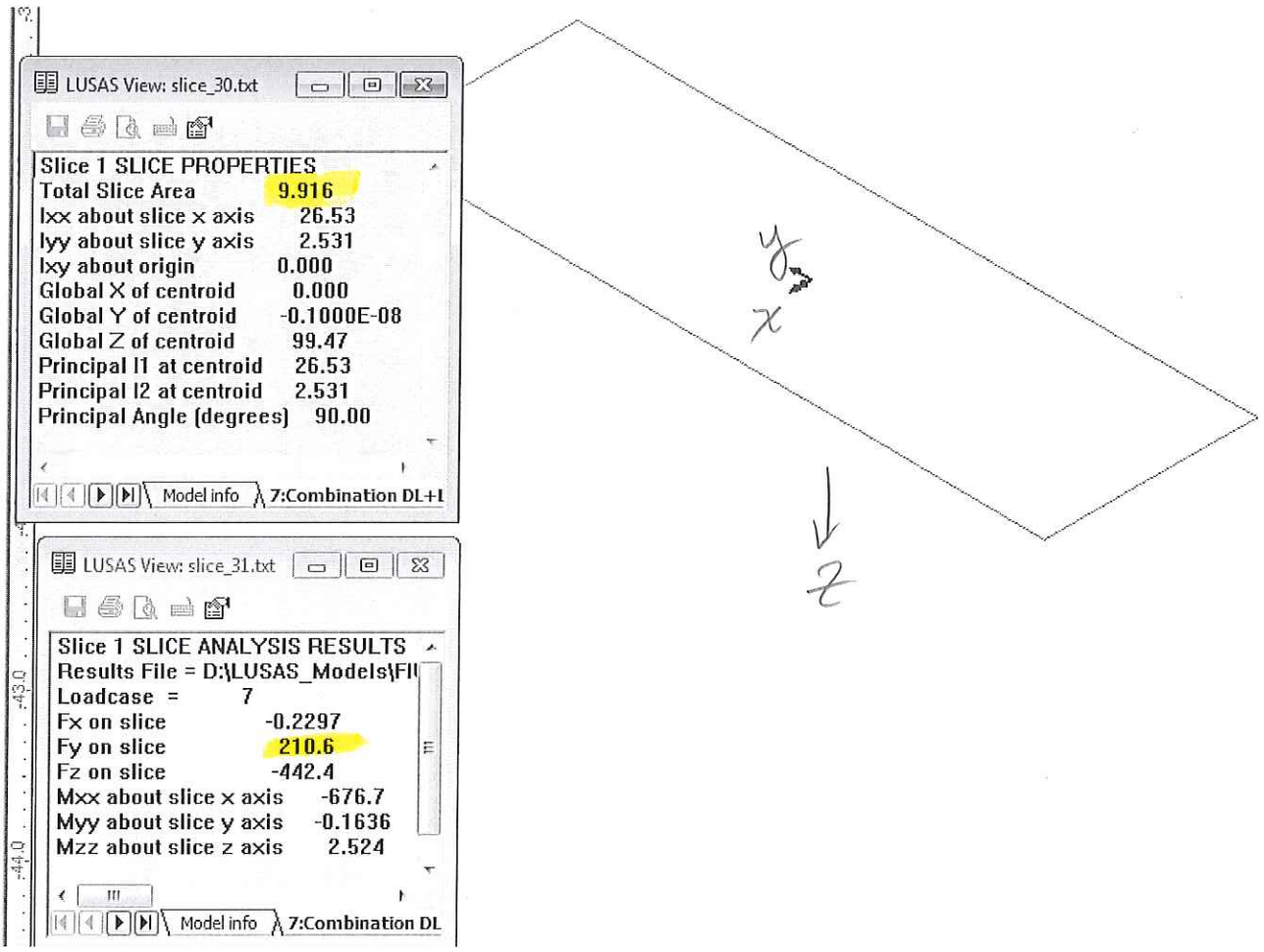

Fixed Pier

Members 9 & 10

LUSAS View: slice_32.txt

Slice 1 SLICE PROPERTIES

Total Slice Area	9.768
Ixx about slice x axis	25.36
Iyy about slice y axis	2.493
Ixy about origin	0.000
Global X of centroid	0.000
Global Y of centroid	-0.1000E-08
Global Z of centroid	134.4
Principal I1 at centroid	25.36
Principal I2 at centroid	2.493
Principal Angle (degrees)	90.00

Model info | 7:Combination DL+

LUSAS View: slice_33.txt

Slice 1 SLICE ANALYSIS RESULTS

Results File = D:\LUSAS_Models\FIU\Associat

Loadcase = 7

Fx on slice	0.9320E-02
Fy on slice	-42.88
Fz on slice	-813.2
Mxx about slice x axis	28.76
Myy about slice y axis	-0.3907E-01
Mzz about slice z axis	0.1414

Model info | 7:Combination DL+LL+ALL_P

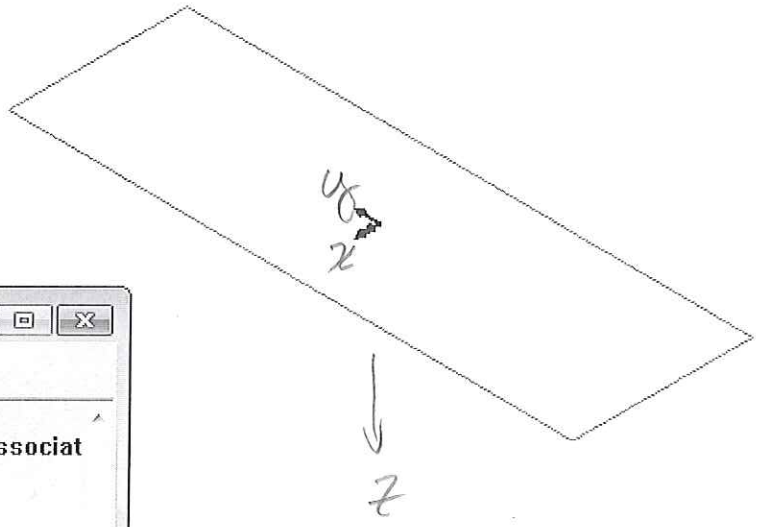

Fixed Pylon
Members 11 & 12

LUSAS View: slice_23.txt

Slice 1 SLICE PROPERTIES
Total Slice Area 11.13
Ixx about slice x axis 37.51
Iyy about slice y axis 2.840
Ixy about origin 0.000
Global X of centroid 0.000
Global Y of centroid -0.1000E-08
Global Z of centroid 171.7
Principal I1 at centroid 37.51
Principal I2 at centroid 2.840
Principal Angle (degrees) 90.00

Model info | 7:Combination DL-

LUSAS View: slice_22.txt

Slice 1 SLICE ANALYSIS RESULTS
Results File = D:\LUSAS_Models\FIU\Asso
Loadcase = 7
Fx on slice -0.2074
Fy on slice 713.3
Fz on slice -733.8
Mxx about slice x axis -243.9
Myy about slice y axis -0.3882E-02
Mzz about slice z axis 0.3564

Model info | 7:Combination DL+LL+AI

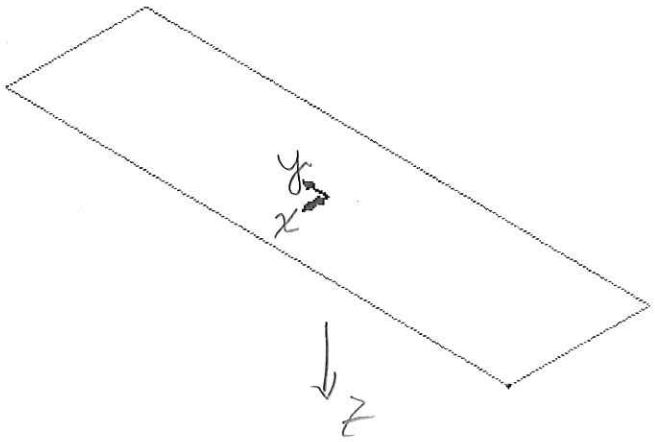

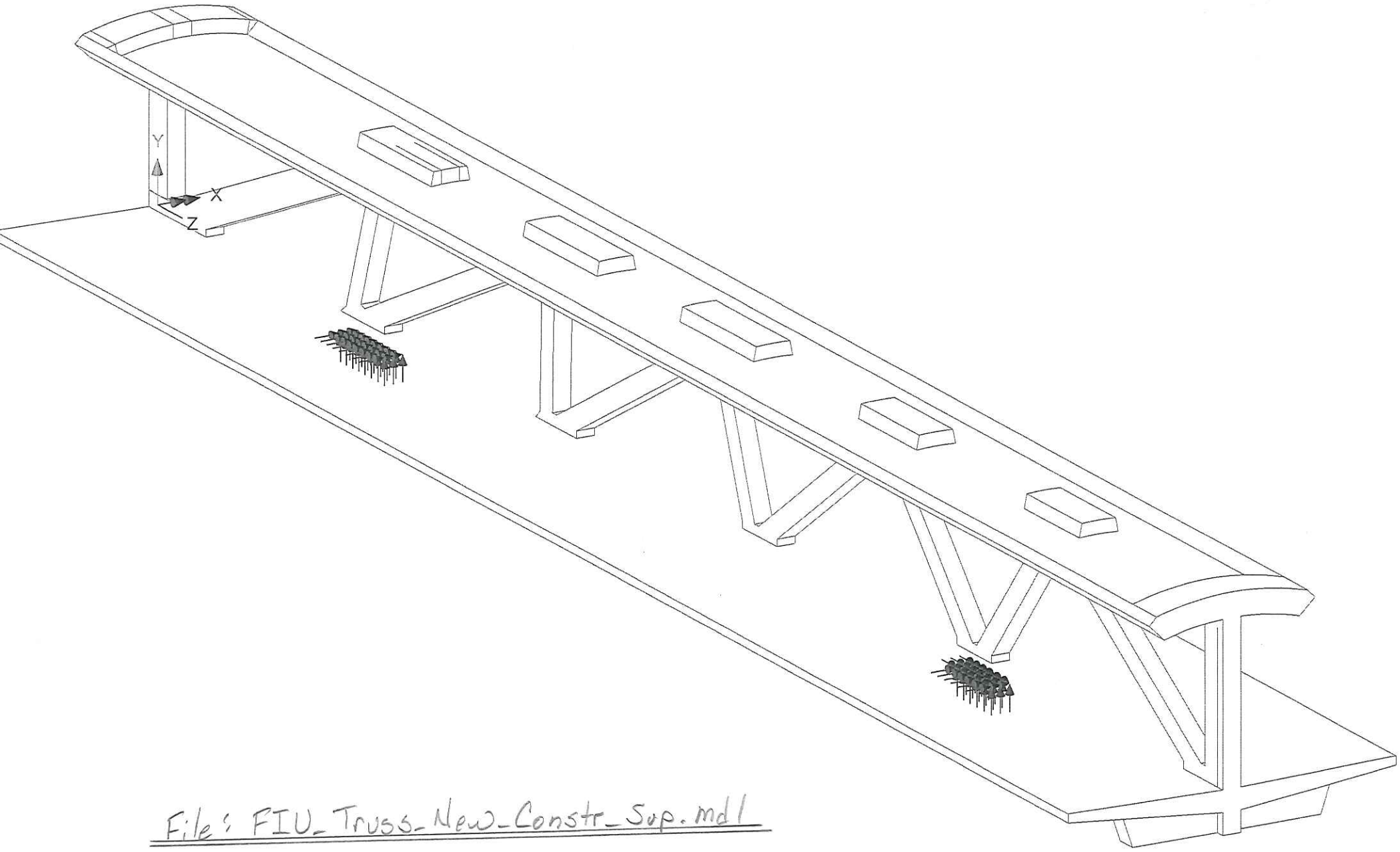

File: FIU_Truss_New_Constr_Sup.mdl

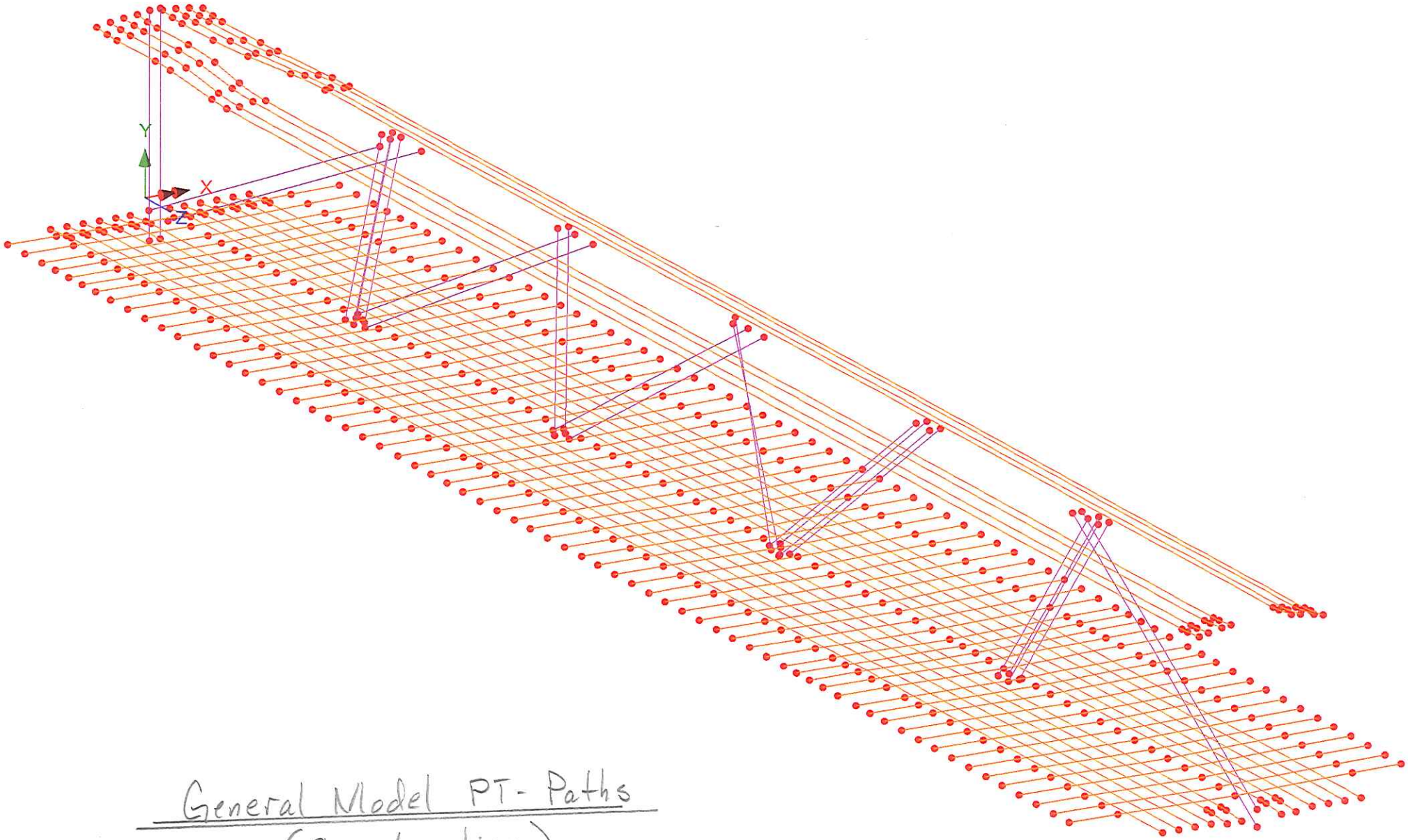

General Model PT- Paths
(Construction)

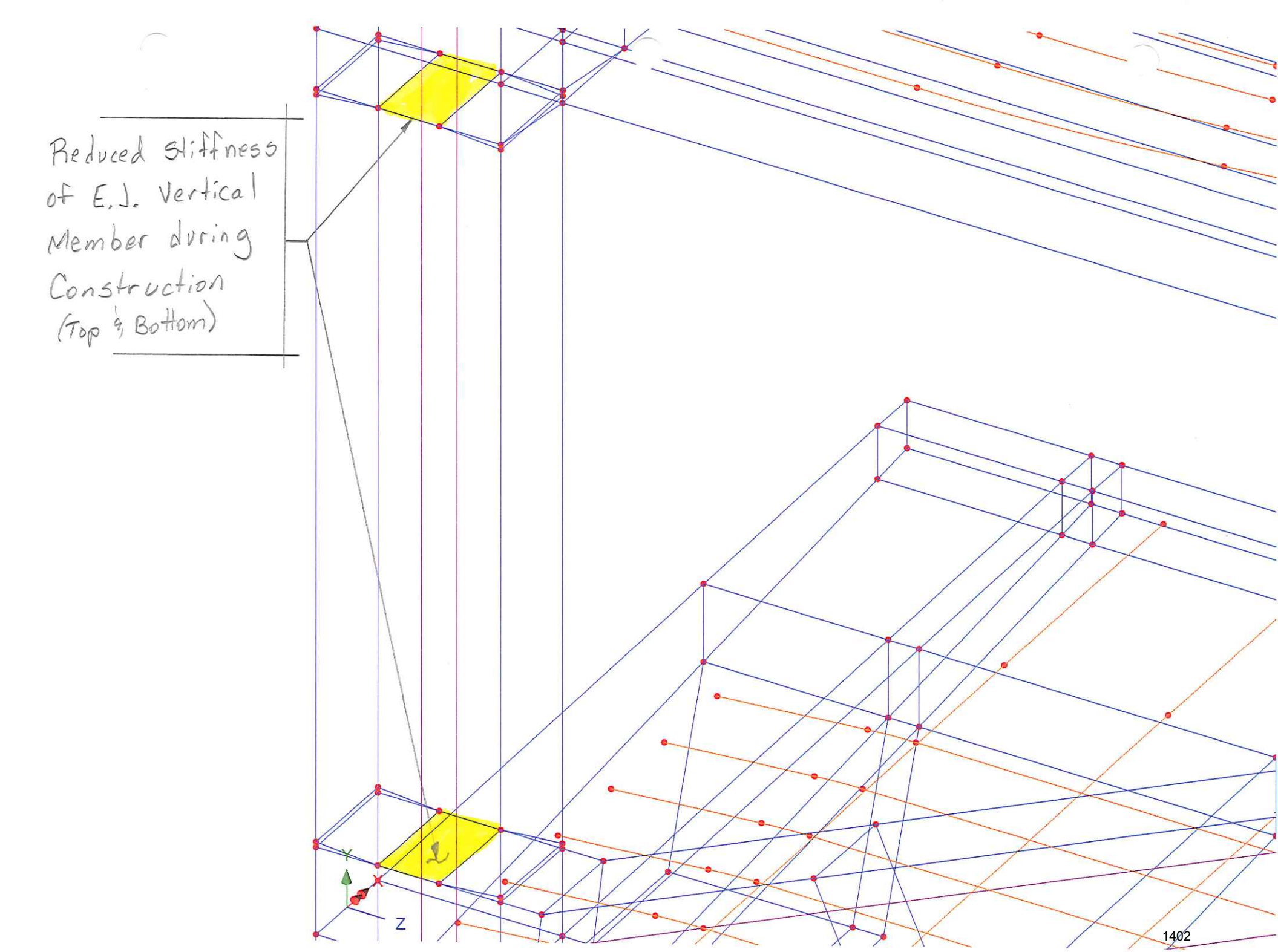
Reduced Stiffness of E.J. Vertical Member during Construction (Top & Bottom)
Y
Z

Combination DL+ALL_PT
Entity: Stress - Solids
Component: SZ (Units: kip/ft²)

-703.52
-562.82
-422.11
-281.41
-140.70
0.00
140.70
281.41
422.11

Maximum 554.95 at node 22392
Minimum -711.39 at node 22570

$\sigma_{Allow.} = .45(8{,}500)(.144)$

$= 550.8$ KSF (compr.)

File: FIU_Truss_New_Constr.

> Simple Supports
> DL+PT (No Ped. LL)
> Only member Canopy PT Stressed
> Diagonals ② & ⑪ PT Bars active
> Used 0.94 Load factor for Tendons
" 0.97 " " " PT-Bars

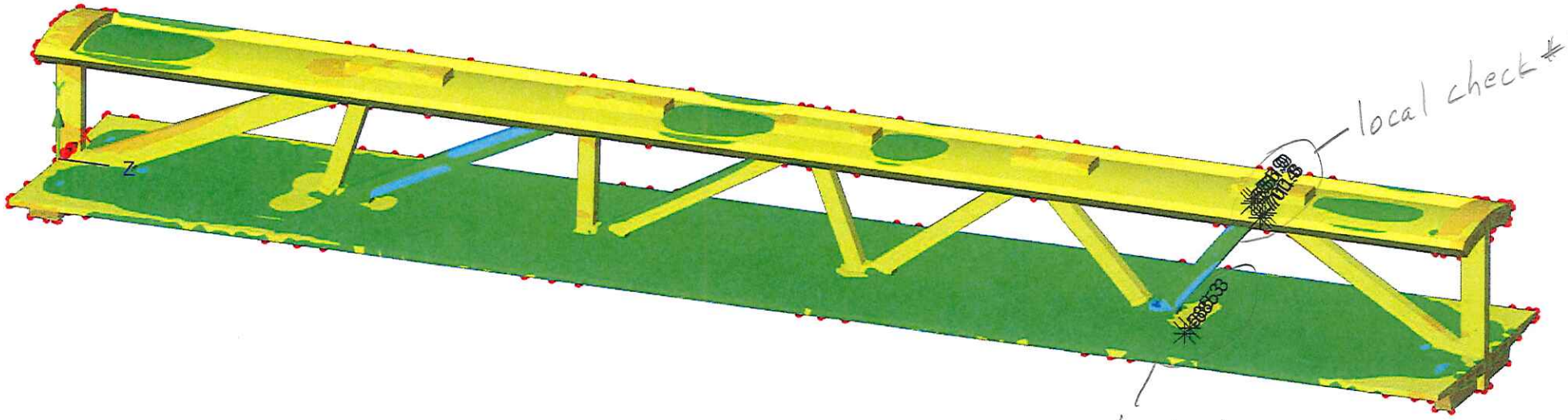

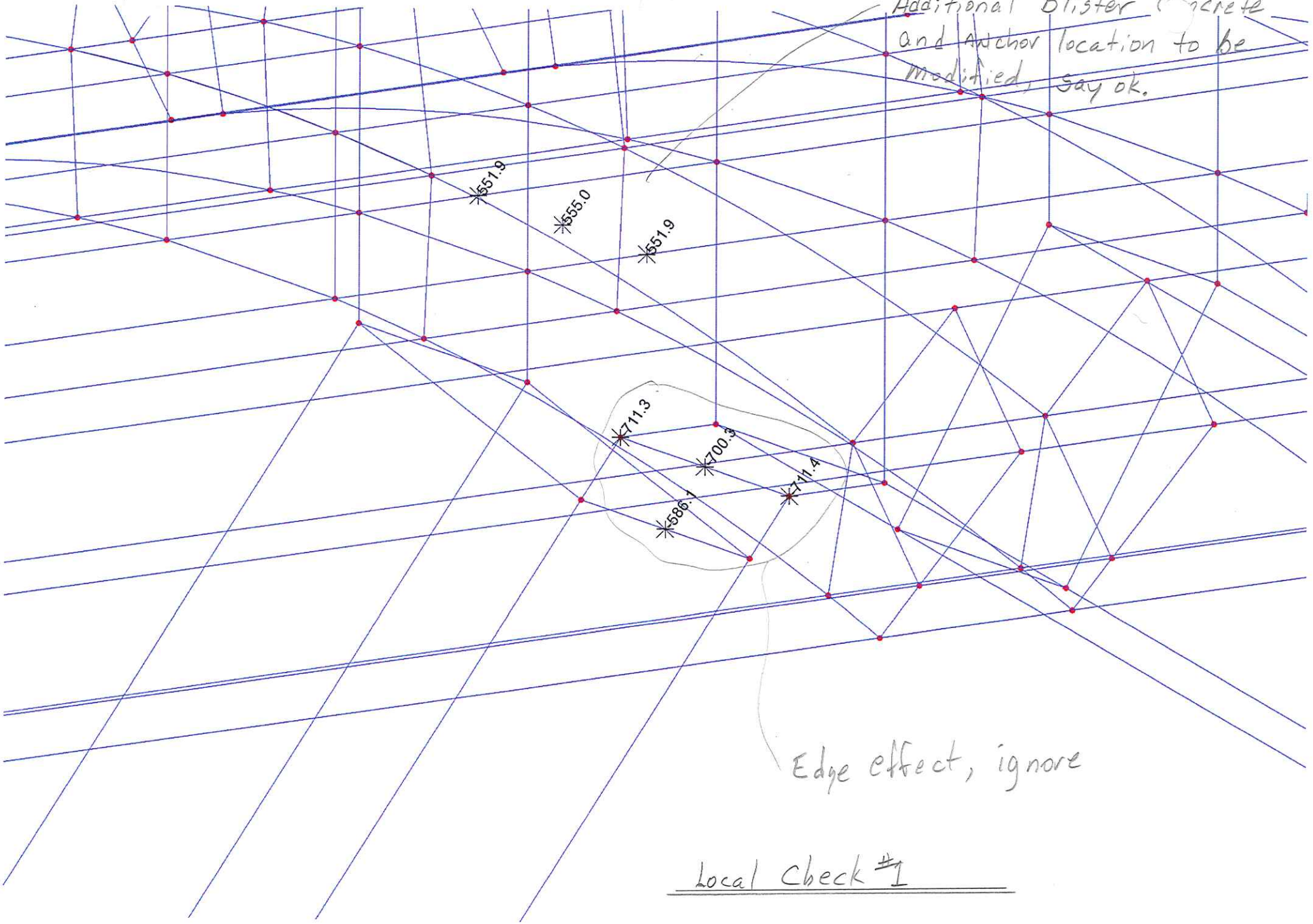
Additional Blister Concrete and Anchor location to be modified, say ok.
551.9
555.0
551.9
711.3
700.3
711.4
586.1
Edge effect, ignore
Local Check #1

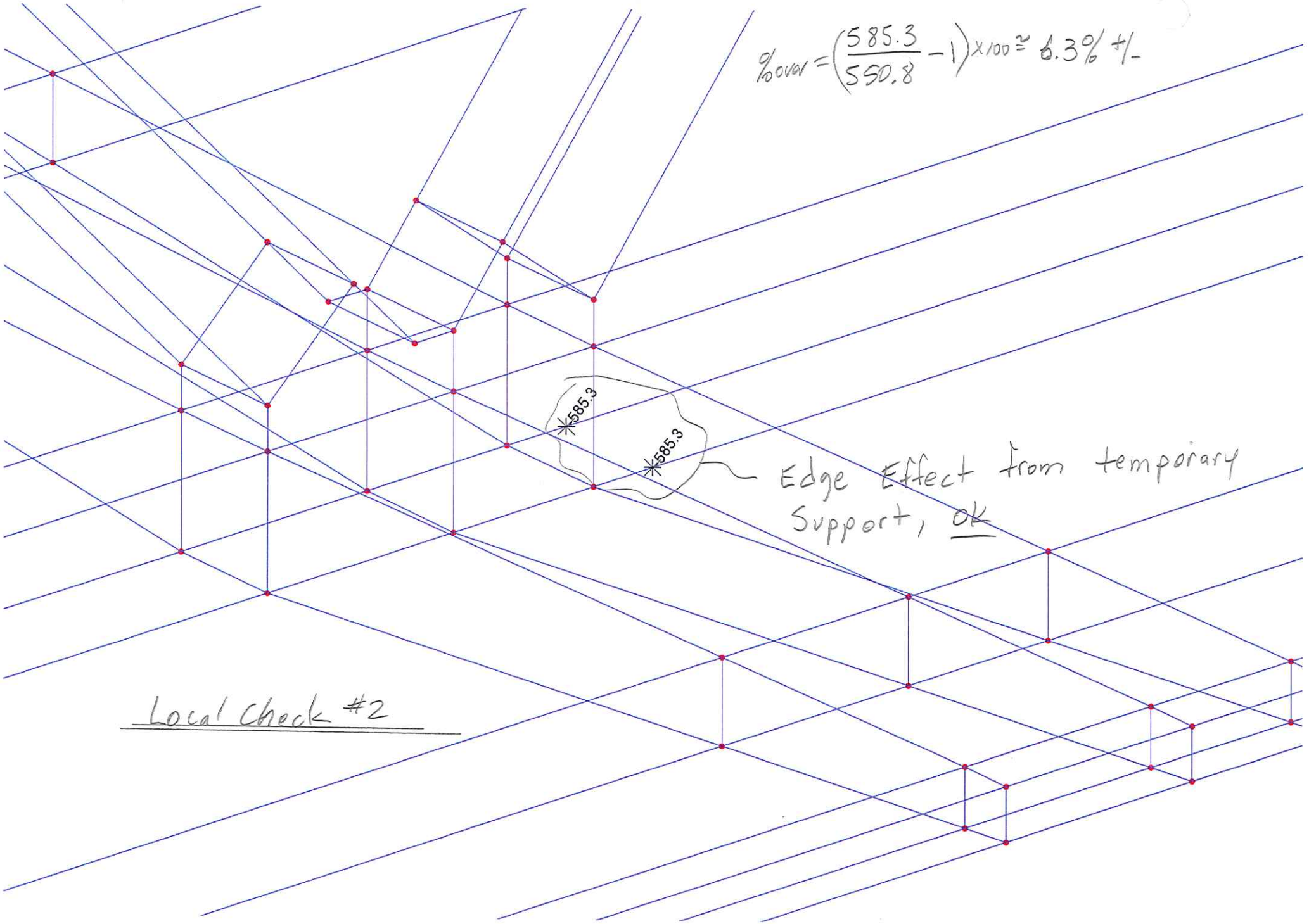
$\%_{over} = \left(\frac{585.3}{550.8} - 1\right) \times 100 \approx 6.3\%$ +/-
585.3
585.3
Edge Effect from temporary Support, OK
Local Check #2

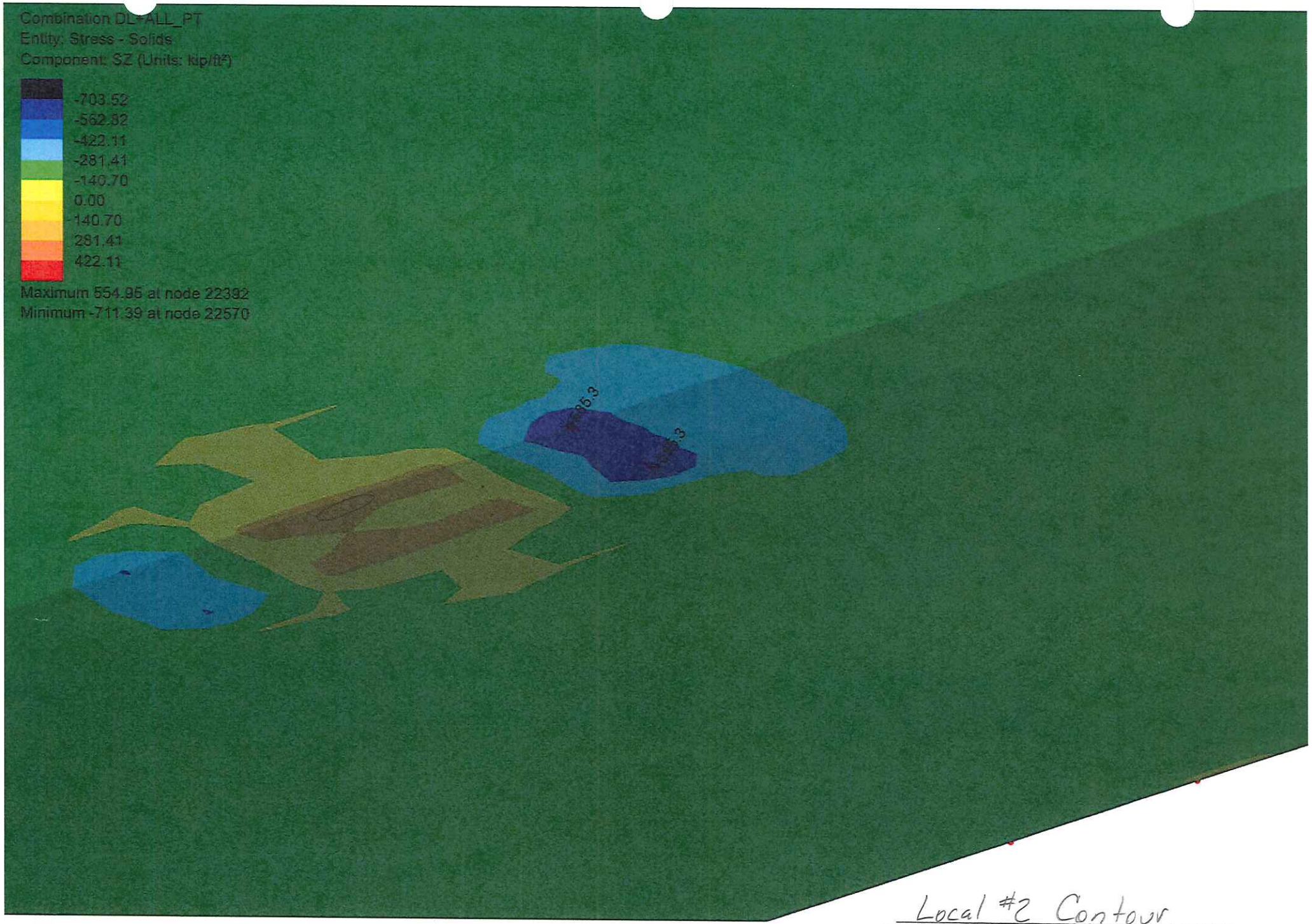

Local #2 Contour

Combination DL+ALL_PT
Entity: Stress - Solids
Component: SZ (Units: kip/ft²)

-1119.86
-895.89
-671.92
-447.94
-223.97
0.00
223.97
447.94
671.92

Maximum 803.97 at node 22395 of element 11788
Minimum -1211.78 at node 22452 of element 11891

OK

Local #2 - Un Averaged SZ - OK

> Contours shown on Top w/o Shading
> Black lines are limits of Temporary Support

Combination DL+ALL_PT
Entity: Displacement
Component: DY (Units: ft)

-0.53"
-0.43"
-0.32"
-0.21"
-0.11"
0
0.11"
0.21"
0.32"

Maximum 0.37" at node 20117
Minimum -0.59" at node 1402

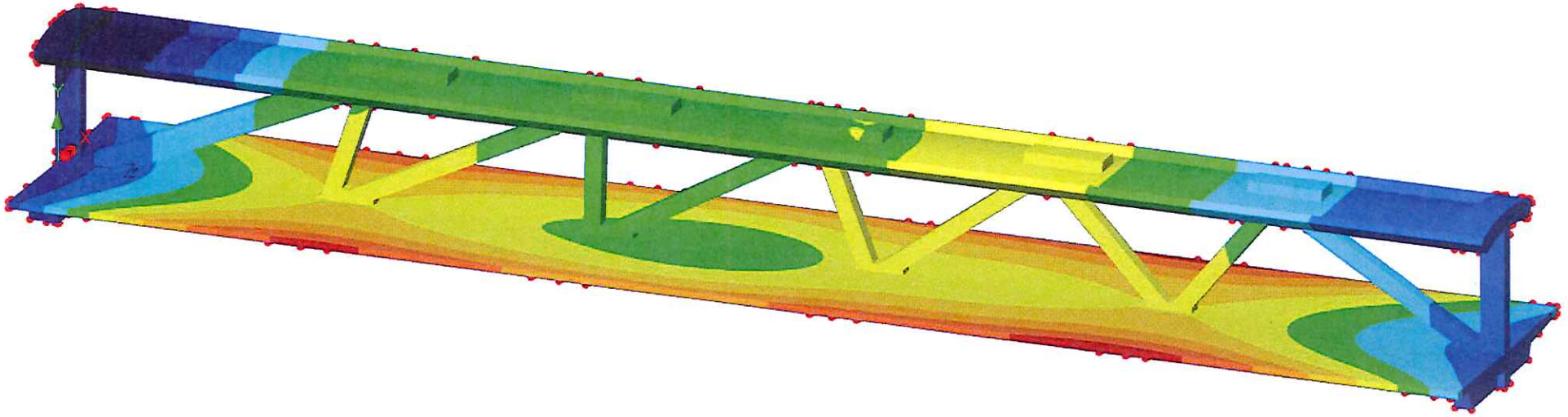

File: FIU_Truss_New_Constr_Sup.Mdl
> Displacements DY

Constr. Model

Members 1 & 2

LUSAS View: slice_34.txt

Slice 1 SLICE PROPERTIES

Total Slice Area	6.125
Ixx about slice x axis	6.253
Iyy about slice y axis	1.563
Ixy about origin	0.000
Global X of centroid	0.1111E-31
Global Y of centroid	-0.1000E-08
Global Z of centroid	1.750
Principal I1 at centroid	6.253
Principal I2 at centroid	1.563
Principal Angle (degrees)	90.00

Model info | 7:Combination DL+Al

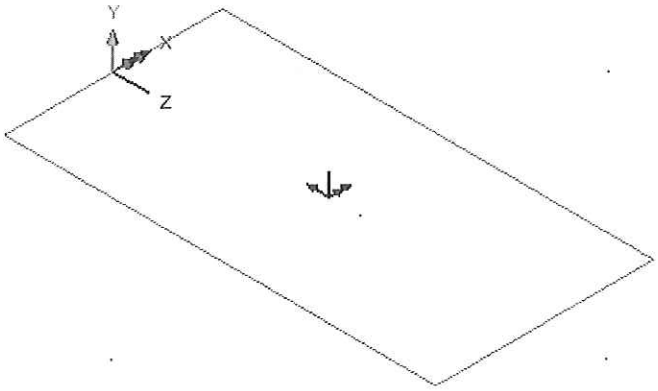

LUSAS View: slice_35.txt

Slice 1 SLICE ANALYSIS RESULTS

Results File = D:\LUSAS_Models\FIU\Assc

Loadcase =	7
Fx on slice	0.8946E-02
Fy on slice	92.46
Fz on slice	-745.8
Mxx about slice x axis	-206.6
Myy about slice y axis	-0.9576E-02
Mzz about slice z axis	0.3253E-01

Model info | 7:Combination DL+ALL_I

Longtr. Model

Members 3 & 4

LUSAS View: slice_36.txt

Slice 1 SLICE PROPERTIES

Total Slice Area	12.49
Ixx about slice x axis	53.05
Iyy about slice y axis	3.188
Ixy about origin	0.000
Global X of centroid	-0.1912E-15
Global Y of centroid	-0.1000E-08
Global Z of centroid	34.83
Principal I1 at centroid	53.05
Principal I2 at centroid	3.188
Principal Angle (degrees)	90.00

Model info | 7:Combination DL+.

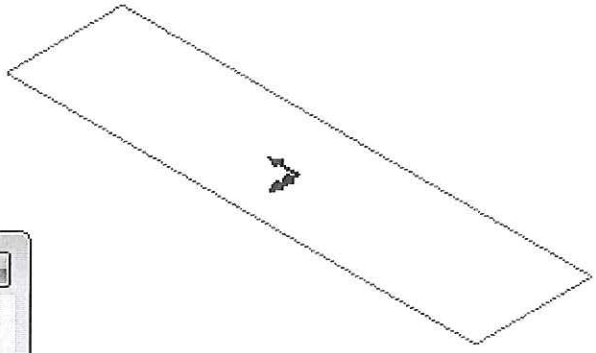

LUSAS View: slice_37.txt

Slice 1 SLICE ANALYSIS RESULTS

Results File = D:\LUSAS_Models\FIUV

Loadcase =	7
Fx on slice	-0.1129
Fy on slice	-869.6
Fz on slice	-1706.
Mxx about slice x axis	-2195.
Myy about slice y axis	0.1063
Mzz about slice z axis	-0.1566

Model info | 7:Combination DL+A

Constr. Model
Members 5 & 6

LUSAS View: slice_1.txt

Slice 1 SLICE PROPERTIES

Total Slice Area	11.55
Ixx about slice x axis	41.93
Iyy about slice y axis	2.948
Ixy about origin	0.000
Global X of centroid	0.000
Global Y of centroid	-0.1000E-0
Global Z of centroid	66.36
Principal I1 at centroid	41.93
Principal I2 at centroid	2.948
Principal Angle (degrees)	90.00

Model info | 7:Combination D

LUSAS View: slice_2.txt

Slice 1 SLICE ANALYSIS RESULTS

Results File = D:\LUSAS_Models\FIUV

Loadcase = 7

Fx on slice	0.2534
Fy on slice	-384.2
Fz on slice	-377.4
Mxx about slice x axis	-630.2
Myy about slice y axis	0.1659
Mzz about slice z axis	-0.3701

Model info | 7:Combination DL+A

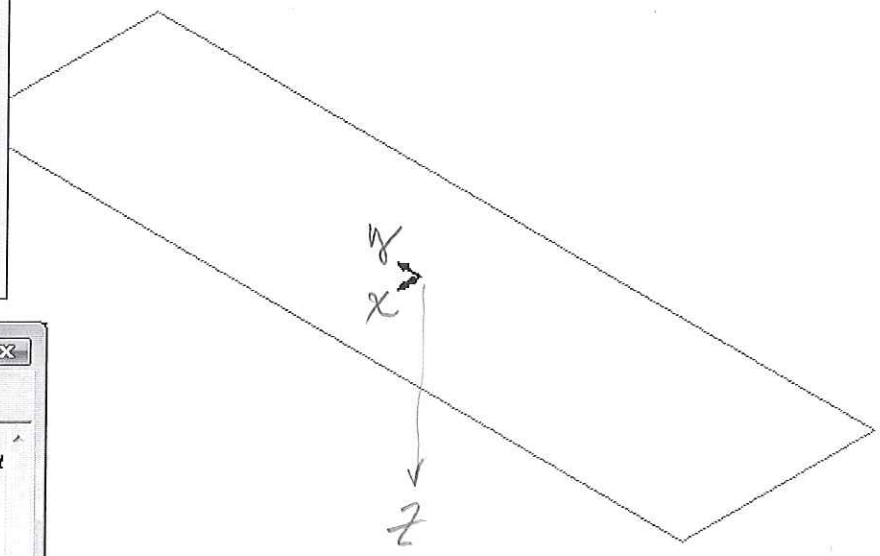

Constr. Model

Members 7 & 8

LUSAS View: slice_3.txt

Slice 1 SLICE PROPERTIES	
Total Slice Area	9.916
Ixx about slice x axis	26.53
Iyy about slice y axis	2.531
Ixy about origin	0.000
Global X of centroid	0.000
Global Y of centroid	-0.1000E-08
Global Z of centroid	99.47
Principal I1 at centroid	26.53
Principal I2 at centroid	2.531
Principal Angle (degrees)	90.00

Model info | 7:Combination DL+A

LUSAS View: slice_4.txt

Slice 1 SLICE ANALYSIS RESULTS	
Results File = D:\LUSAS_Models\FIU	
Loadcase =	7
Fx on slice	-0.2557
Fy on slice	-22.64
Fz on slice	-479.1
Mxx about slice x axis	-454.9
Myy about slice y axis	-0.1801
Mzz about slice z axis	2.523

Model info | 7:Combination DL+

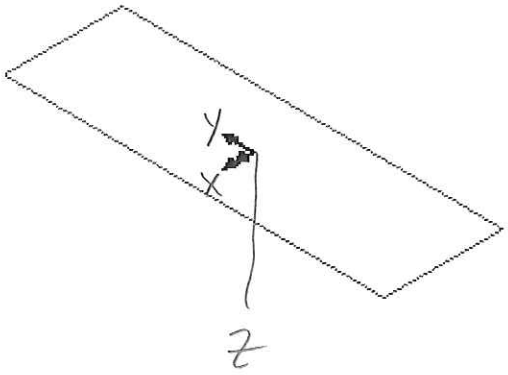

Constr. Model

Members 9 & 10

LUSAS View: slice_5.txt

Slice 1 SLICE PROPERTIES

Total Slice Area	9.768
Ixx about slice x axis	25.36
Iyy about slice y axis	2.493
Ixy about origin	0.000
Global X of centroid	0.000
Global Y of centroid	-0.1000E-08
Global Z of centroid	134.4
Principal I1 at centroid	25.36
Principal I2 at centroid	2.493
Principal Angle (degrees)	90.00

Model info | 7:Combination DL+AL

LUSAS View: slice_6.txt

Slice 1 SLICE ANALYSIS RESULTS

Results File = D:\LUSAS_Models\Fl

Loadcase = 7

Fx on slice	0.8600E-01
Fy on slice	-617.1
Fz on slice	-1379.
Mxx about slice x axis	959.7
Myy about slice y axis	-0.1349
Mzz about slice z axis	0.1485

Model info | 7:Combination DL

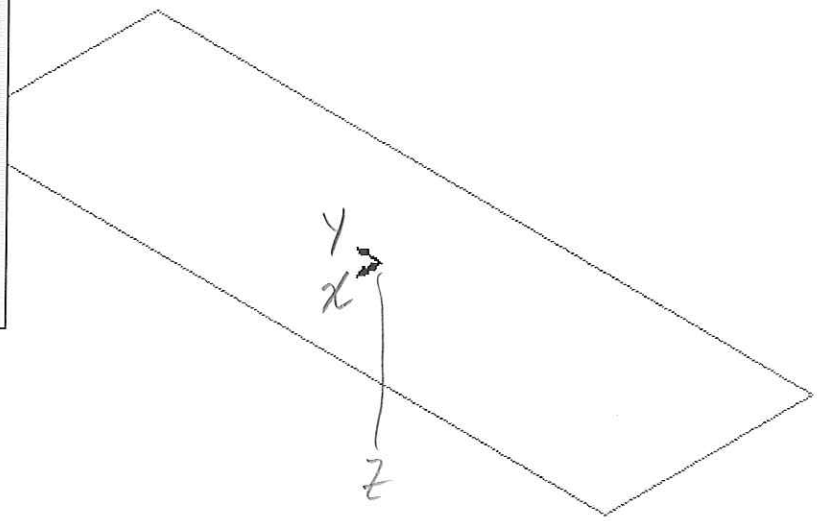

Constr. Model

Members 11 & 12

LUSAS View: slice_7.txt

```
Slice 1 SLICE PROPERTIES
Total Slice Area          9.598
Ixx about slice x axis    24.06
Iyy about slice y axis    2.449
Ixy about origin          0.000
Global X of centroid      0.000
Global Y of centroid      -0.1000E-08
Global Z of centroid      171.3
Principal I1 at centroid  24.06
Principal I2 at centroid  2.449
Principal Angle (degrees) 90.00
```

Model info | 7:Combination DL+A

LUSAS View: slice_8.txt

```
Slice 1 SLICE ANALYSIS RESULTS
Results File = D:\LUSAS_Models\FIU\Ass
Loadcase =        7
Fx on slice          -0.2328
Fy on slice          114.8
Fz on slice          35.86
Mxx about slice x axis    -29.71
Myy about slice y axis    -0.4317E-01
Mzz about slice z axis    0.2510
```

Model info | 7:Combination DL+ALL_

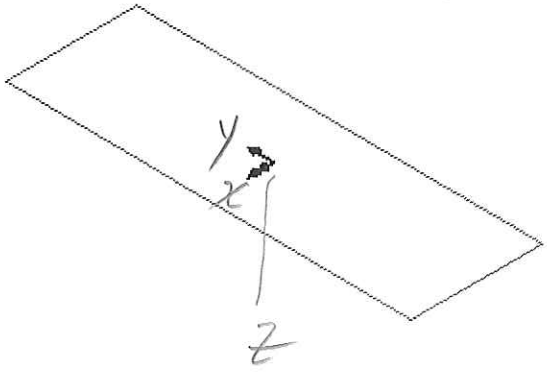

PT Stressing Sequence

FIU Truss = Approximate 175' Span

LUSAS Model is in Casting Position and Supported on the bottom of the Truss elements only.

	CANOPY		DIAGONAL								Bottom Slab						TRANS.	CANOPY	
LUSAS Combo	Tendon C2	Tendon C3	PT-Bars 2	PT-Bars 3	PT-Bars 5	PT-Bars 6	PT-Bars 7	PT-Bars 8	PT-Bars 10	PT-Bars 11	Tendon D1	Tendon D2	Tendon D3	Tendon D4	Tendon D5	Tendon D6	Tendons ALL	Tendon C1	Tendon C4
1	*		*							*									
2	*		*							*	*								
3	*		*							*	*	*							
4	*		*							*	*	*	*						
5	*		*							*	*	*	*	*					
6	*		*							*	*	*	*	*	*				
7	*		*							*	*	*	*	*	*	*			
8	*		*							*	*	*	*	*	*	*	*		
9	*		*	*					*	*	*	*	*	*	*	*	*		
10	*		*	*	*			*	*	*	*	*	*	*	*	*	*		
11	*		*	*	*	*	*	*	*	*	*	*	*	*	*	*	*		
12	*	*	*	*	*	*	*	*	*	*	*	*	*	*	*	*	*		
Move-x	*	*	*	*	*	*	*	*	*	*	*	*	*	*	*	*	*		
Pylon 1-xx	*	*	*D	*	*	*	*	*	*	*D	*	*	*	*	*	*	*	*	
Pylon 2-xx	*	*	*D	*	*	*	*	*	*	*D	*	*	*	*	*	*	*	*	*

(* = Indicates Tendon or PT-Bar Stressed)
(*D = Indicates Tendon or PT-Bar De-Stressed)
(x = Truss supported at the base 1st interior diagonal intersections only.)
(xx = Truss supported at the ends only in final assembly position, integral to Pylon.)

See DHall\Public\FIU_LUSAS_Results\
> Results_Casting_Nov. 15, 2016
> Results_MOVE - " "
> Results_Pylon - " "
STATIC Results - Casting Position

Combo 1

	>	C2 + Diag 2 & 11		
2	>	C2 + Diag 2 & 11 + D1		
3	>	C2 + Diag 2 & 11 + D1 + D2		
4	>	"	"	D1 + D2 + D3
5	>	"	"	D1 to D4
6	>	"	"	D1 to D5
7	>	"	"	D1 to D6
8	>	"	"	" + Trans
9	>	"	"	" + Trans + Diag. 3 & 10
10	>			+ Diag 5 + 8
11	>			+ Diag 6 + 7
12	>	ALL above + C3		

MOVE Supports ~ (ALL PT stressed except Top)
Continuity

Combo1_DL+C2+Diag 2 & 11
Entity: Stress - Solids
Component: SZ (Units: kip/ft²)

-119.40
-99.50
-79.60
-59.70
-39.80
-19.90
0.00
19.90
39.80

Maximum 109.36 at node 275
Minimum -180.27 at node 7186

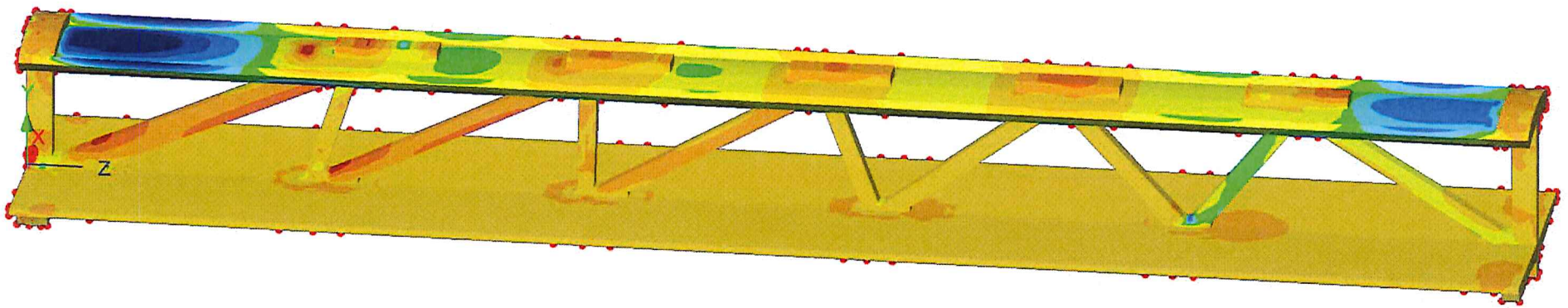

Combo 2_DL+C2+D1+Diag 2 & 11
Entity: Stress - Solids
Component: SZ (Units: kip/ft²)

-278.60
-238.80
-199.00
-159.20
-119.40
-79.60
-39.80
0.00
39.80

Maximum 247.43 at node 119
Minimum -246.21 at node 725

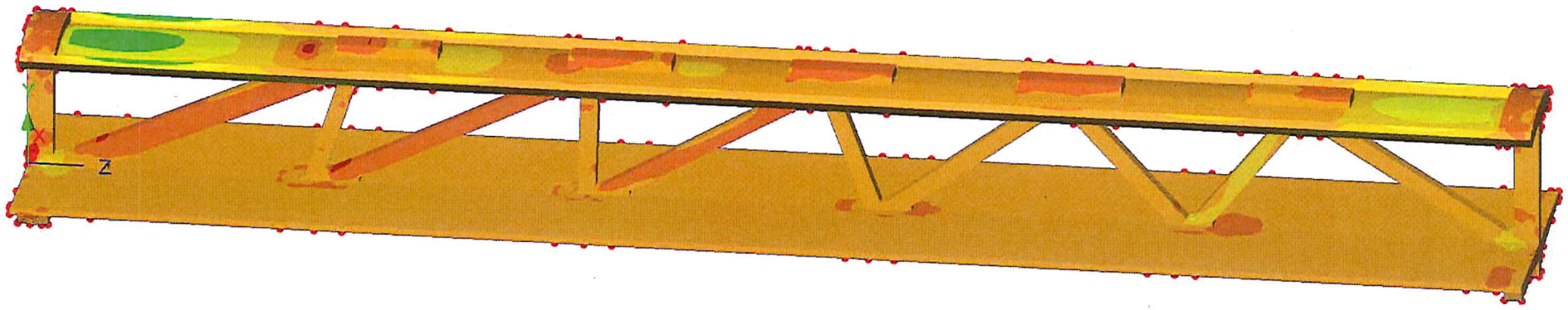

Combo 3_DL+C2+D1D2+Diag 2 & 11
Entity: Stress - Solids
Component: SZ (Units: kip/ft²)

-278.60
-238.80
-199.00
-159.20
-119.40
-79.60
-39.80
0.00
39.80

Maximum 229.89 at node 119
Minimum -319.31 at node 714

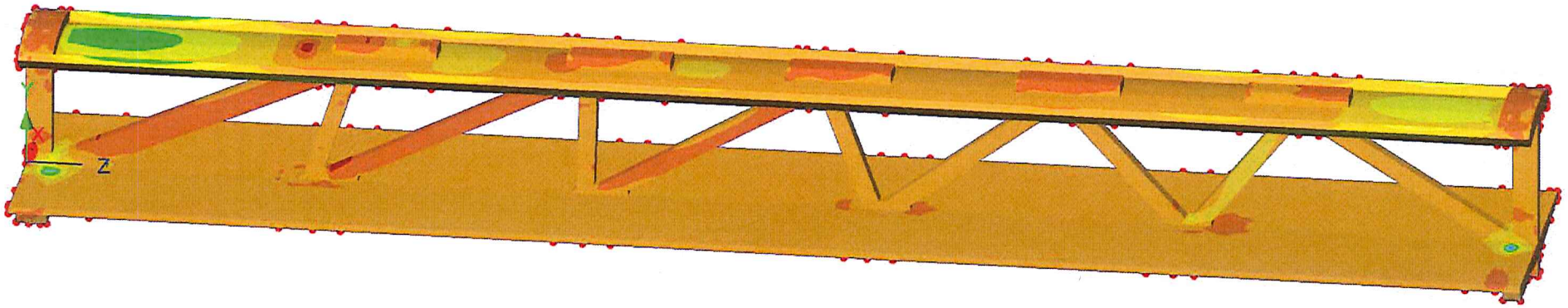

Combo 4_DL+C2+D1toD3+Diag 2 & 11
Entity: Stress - Solids
Component: SZ (Units: kip/ft²)

-278.60
-238.80
-199.00
-159.20
-119.40
-79.60
-39.80
0.00
39.80

Maximum 236.81 at node 119
Minimum -355.02 at node 714

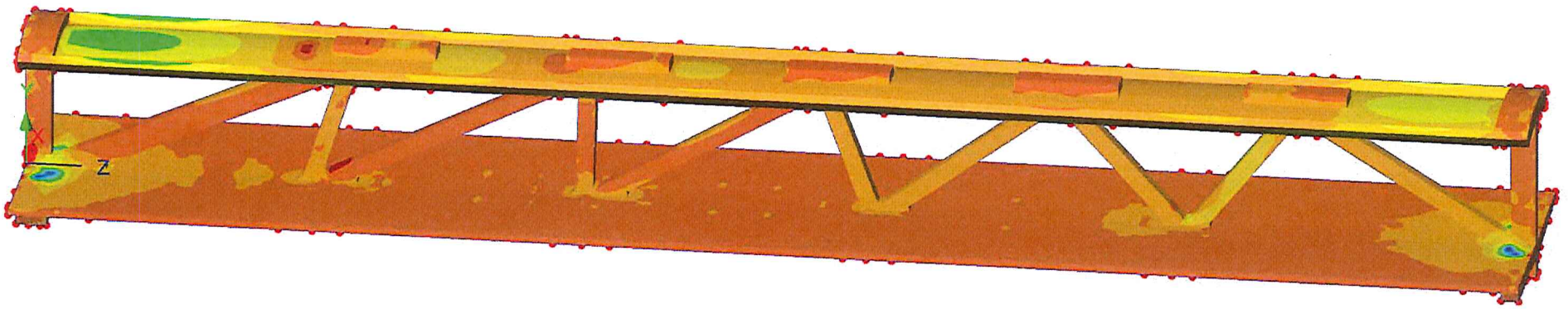

Combo 5_DL+C2+D1toD4+Diag 2 & 11
Entity: Stress - Solids
Component: SZ (Units: kip/ft²)

-278.60
-238.80
-199.00
-159.20
-119.40
-79.60
-39.80
0.00
39.80

Maximum 236.63 at node 119
Minimum -366.05 at node 714

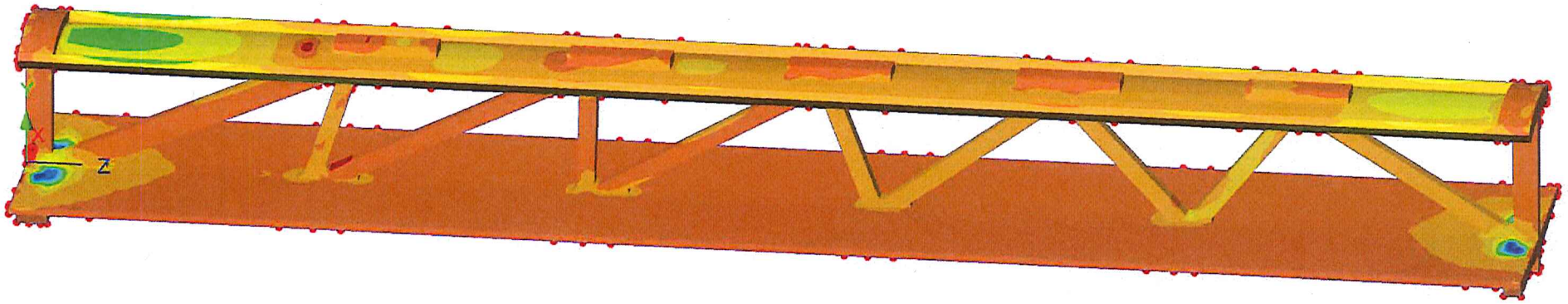

Combo 6_DL+C2+D1toD5+Diag 2 & 11
Entity: Stress - Solids
Component: SZ (Units: kip/ft²)

-278.60
-238.80
-199.00
-159.20
-119.40
-79.60
-39.80
0.00
39.80

Maximum 236.21 at node 119
Minimum -369.83 at node 714

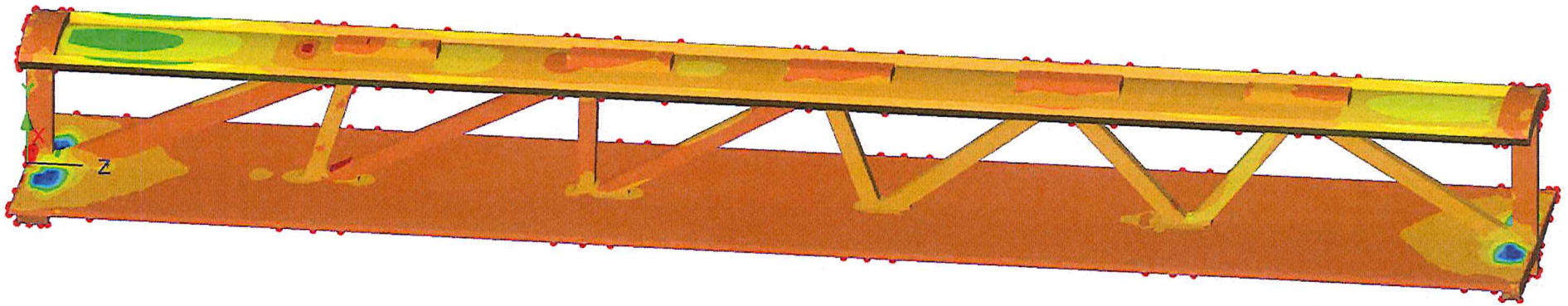

Combo 7_DL+C2+D1toD6+Diag 2 & 11
Entity: Stress - Solids
Component: SZ (Units: kip/ft²)

-278.60
-238.80
-199.00
-159.20
-119.40
-79.60
-39.80
0.00
39.80

Maximum 235.90 at node 119
Minimum -368.87 at node 714

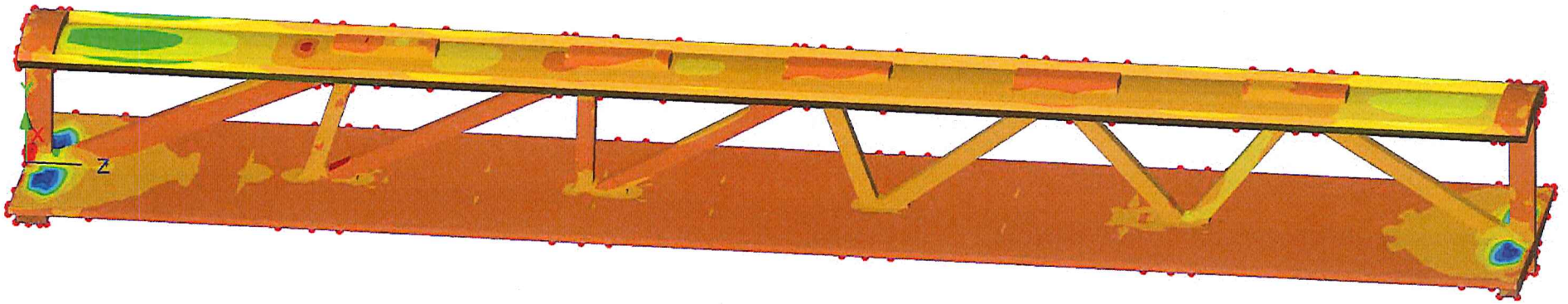

Combo 8_DL+C2+D1toD6+Diag 2&11_Trans
Entity: Stress - Solids
Component: SZ (Units: kip/ft²)

-278.60
-238.80
-199.00
-159.20
-119.40
-79.60
-39.80
0.00
39.80

Maximum 235.91 at node 119
Minimum -368.88 at node 714

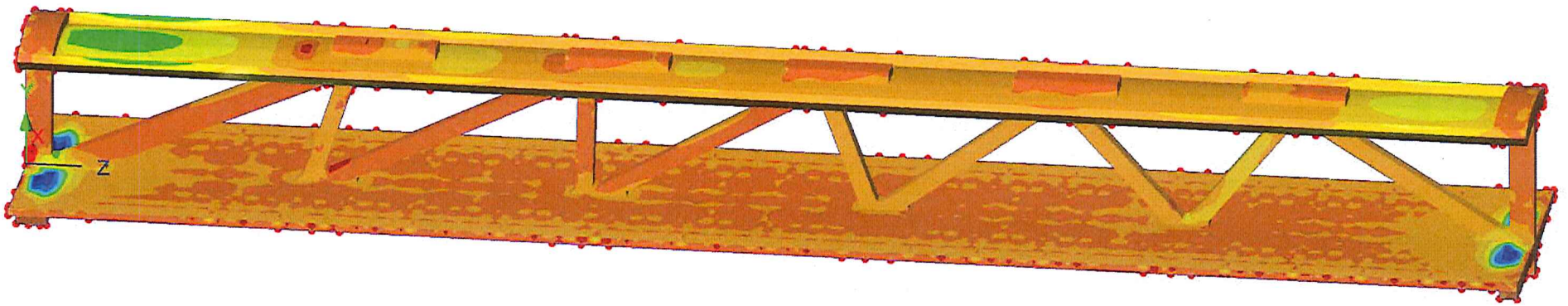

Combo9_DL+C2+D1-D6+Dg2&11&3&10+Trans
Entity: Stress - Solids
Component: SZ (Units: kip/ft²)

Maximum 247.79 at node 120
Minimum -588.49 at node 31598

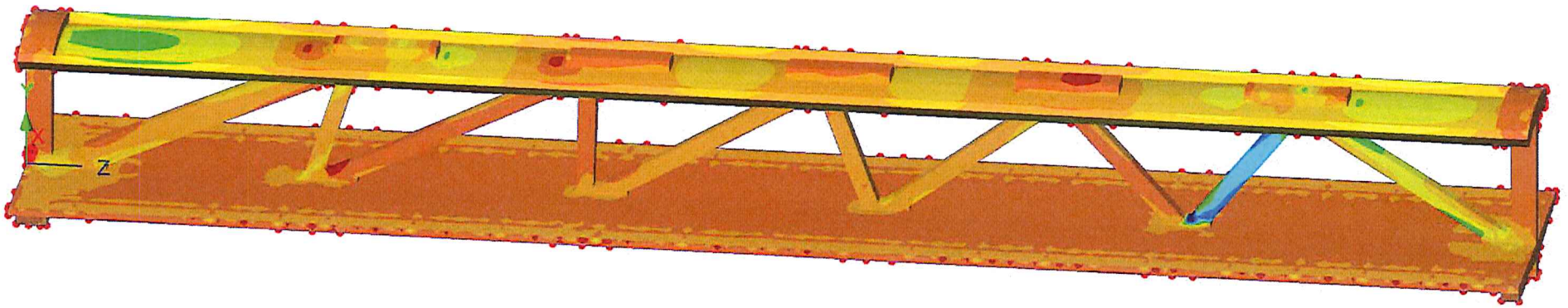

Combo10_DL+C2+D+Trans+Diag2,3,10,11+5+8
Entity: Stress - Solids
Component: SZ (Units: kip/ft²)

-278.60
-238.80
-199.00
-159.20
-119.40
-79.60
-39.80
0.00
39.80

Maximum 236.40 at node 119
Minimum -613.52 at node 31598

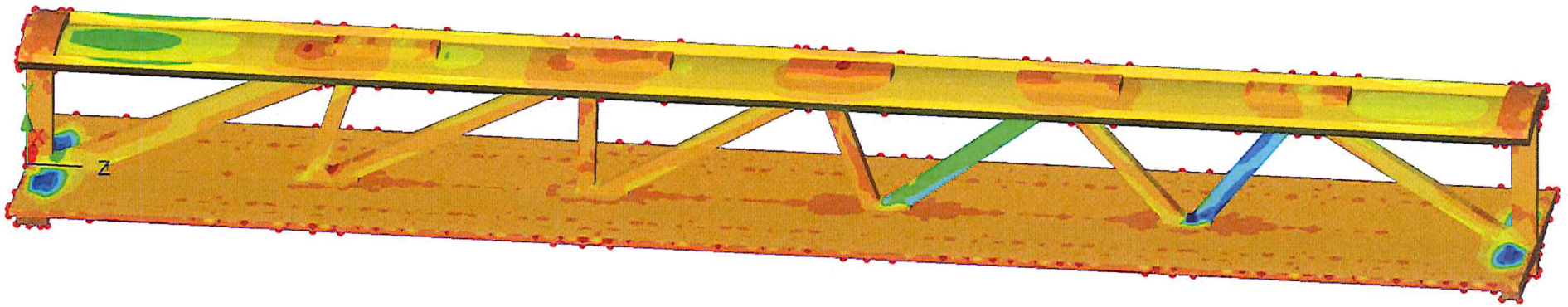

Combo11_DL+C2+D+Trans+Diag2,3,5, 8,10,11+6+7
Entity: Stress - Solids
Component: SZ (Units: kip/ft²)

-278.60
-238.80
-199.00
-159.20
-119.40
-79.60
-39.80
0.00
39.80

Maximum 294.21 at node 13998
Minimum -624.85 at node 31598

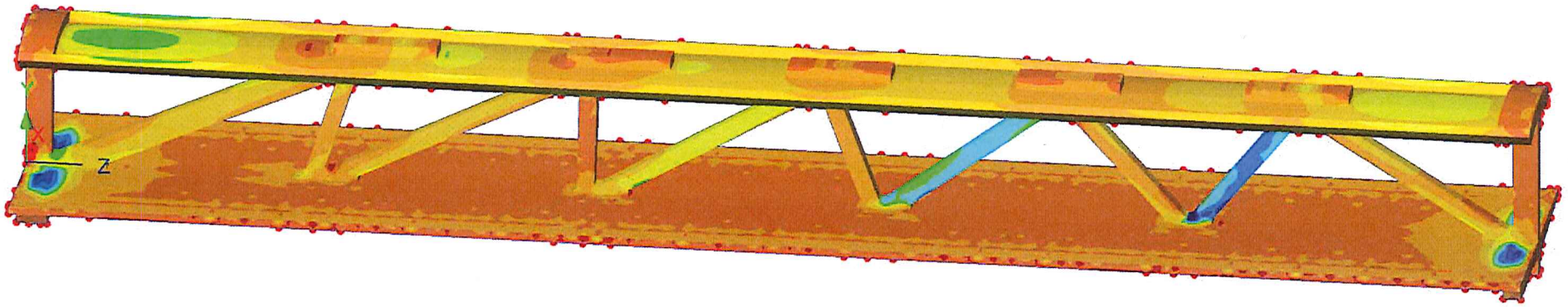

Combo12_DL+C2+D+Trans+Diags+C3
Entity: Stress - Solids
Component: SX (Units: kip/ft²)

-278.60
-238.80
-199.00
-159.20
-119.40
-79.60
-39.80
0.00
39.80

Maximum 314.81 at node 13994
Minimum -306.22 at node 15046

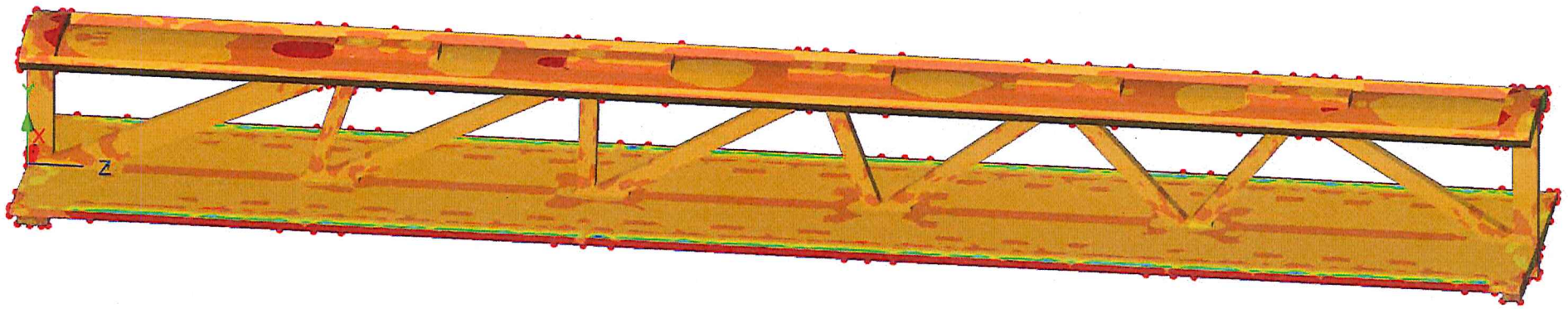

Combo12_DL+C2+D+Trans+Diags+C3
Entity: Stress - Solids
Component: SX (Units: kip/ft²)

-278.60
-238.80
-199.00
-159.20
-119.40
-79.60
-39.80
0.00
39.80

Maximum 314.81 at node 13994
Minimum -306.22 at node 15046

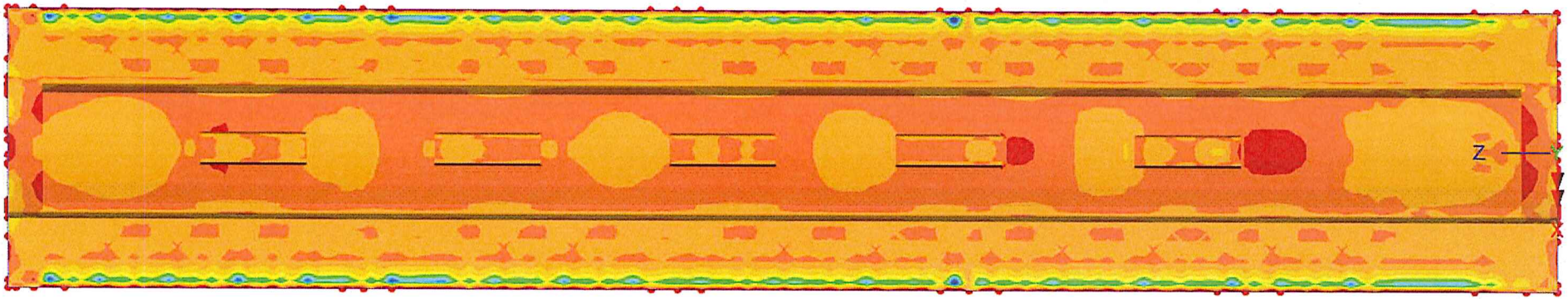

Combo12_DL+C2+D+Trans+Diags+C3
Entity: Stress - Solids
Component: SZ (Units: kip/ft²)

-626.92
-543.58
-460.24
-376.90
-293.56
-210.22
-126.88
-43.54
39.80

Maximum 293.84 at node 13998
Minimum -668.59 at node 31598

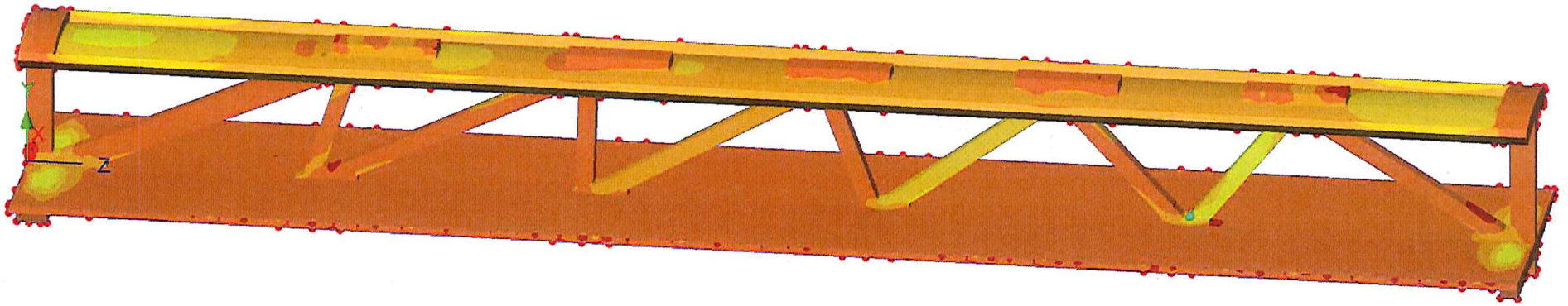

Combo12_DL+C2+D+Trans+Diags+C3
Entity: Stress - Solids
Component: SZ (Units: kip/ft²)

-623.64
-540.71
-457.78
-374.85
-291.92
-208.99
-126.06
-43.13
39.80

Maximum 447.78 at node 28242
Minimum -665.11 at node 31598

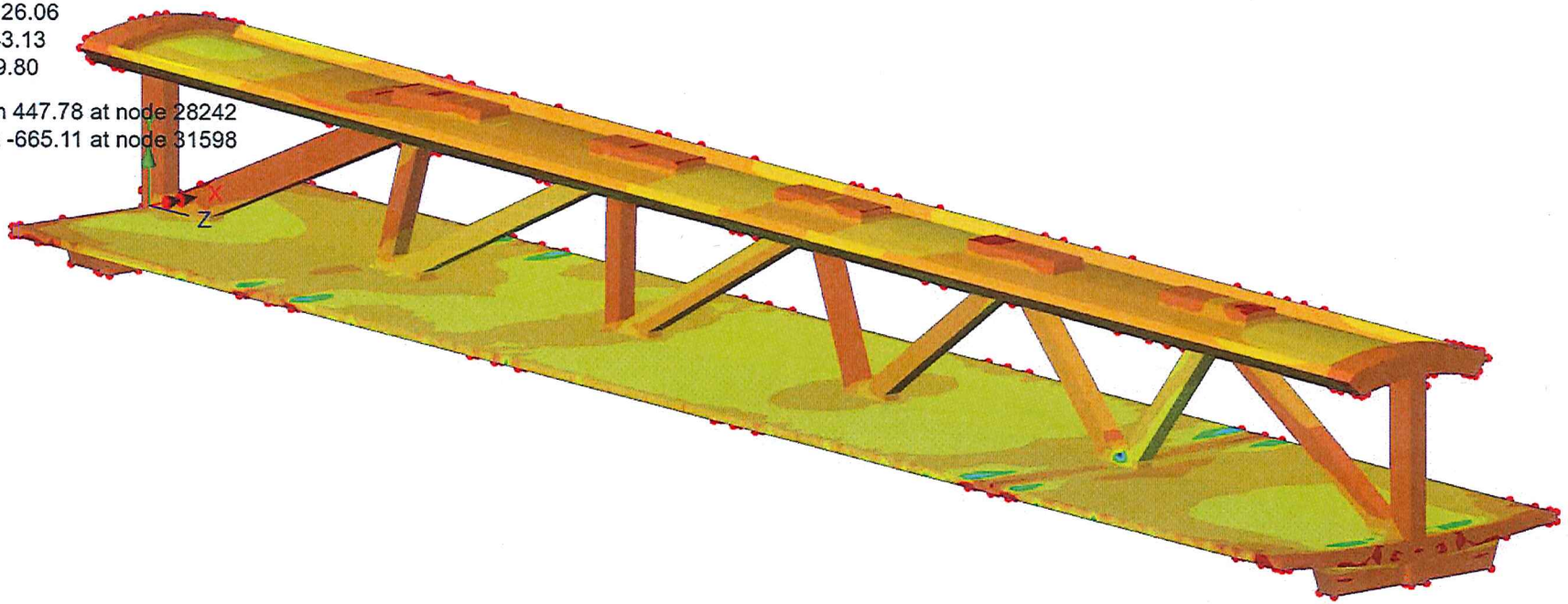

Combo12_DL+C2+D+Trans+Diags+C3
Entity: Stress - Solids
Component: SZ (Units: kip/ft²)

-623.64
-540.71
-457.78
-374.85
-291.92
-208.99
-126.06
-43.13
39.80

Maximum 447.78 at node 28242
Minimum -665.11 at node 31598

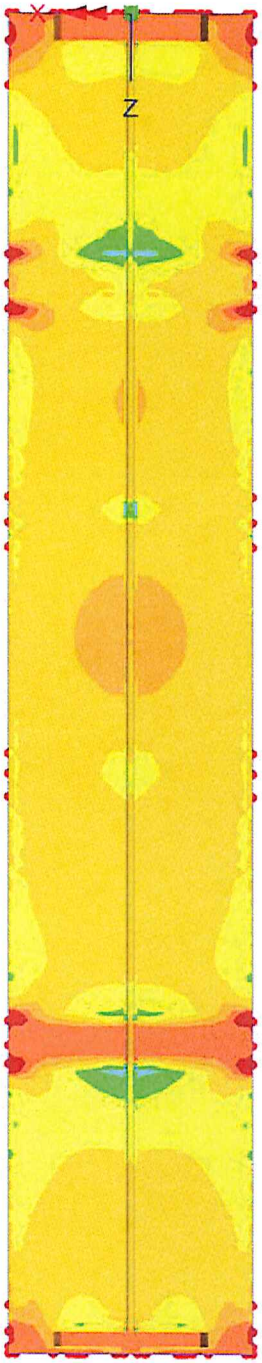

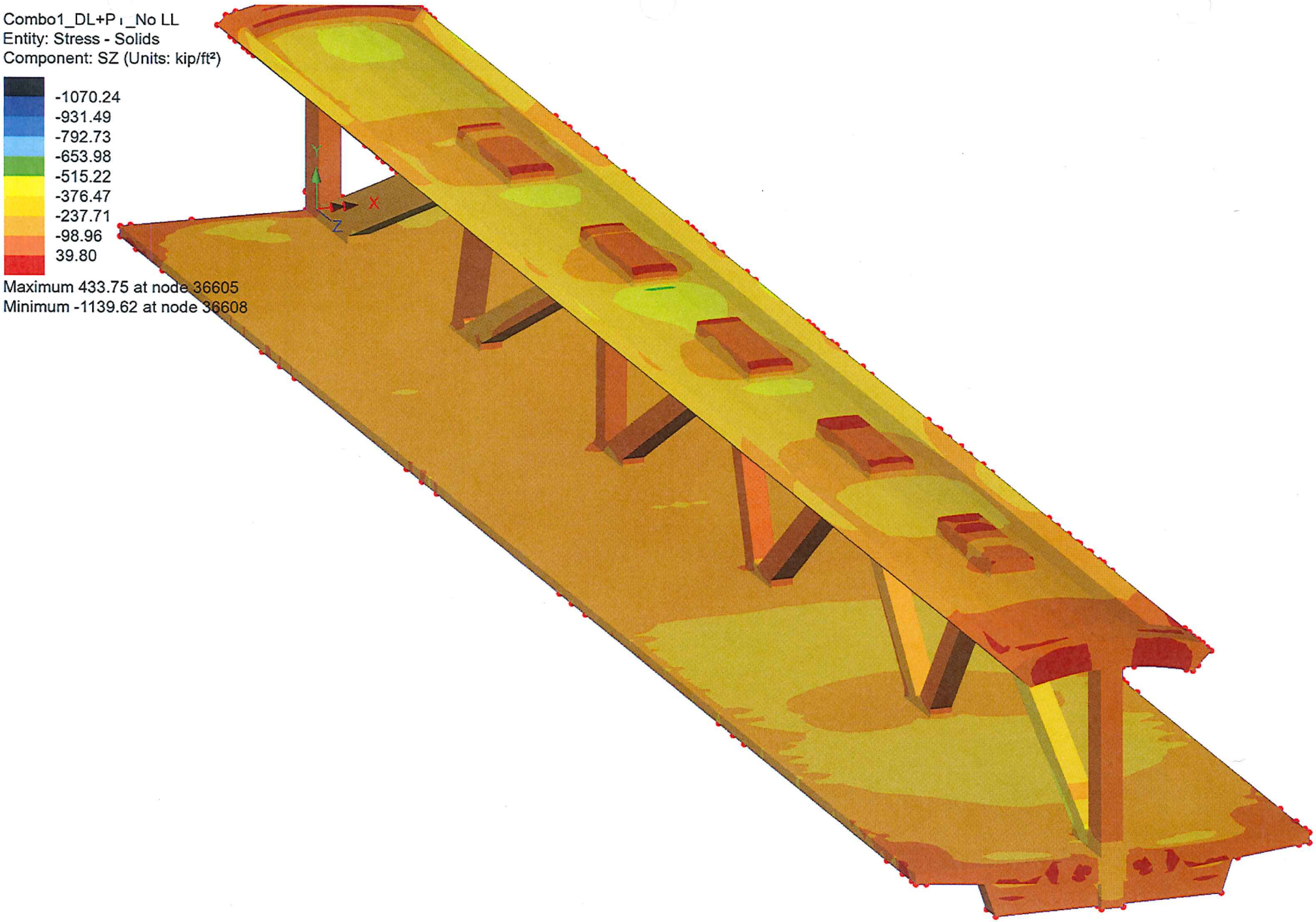
Combo1_DL+P ı _No LL
Entity: Stress - Solids
Component: SZ (Units: kip/ft²)
-1070.24
-931.49
-792.73
-653.98
-515.22
-376.47
-237.71
-98.96
39.80
Maximum 433.75 at node 36605
Minimum -1139.62 at node 36608
Y
X
Z

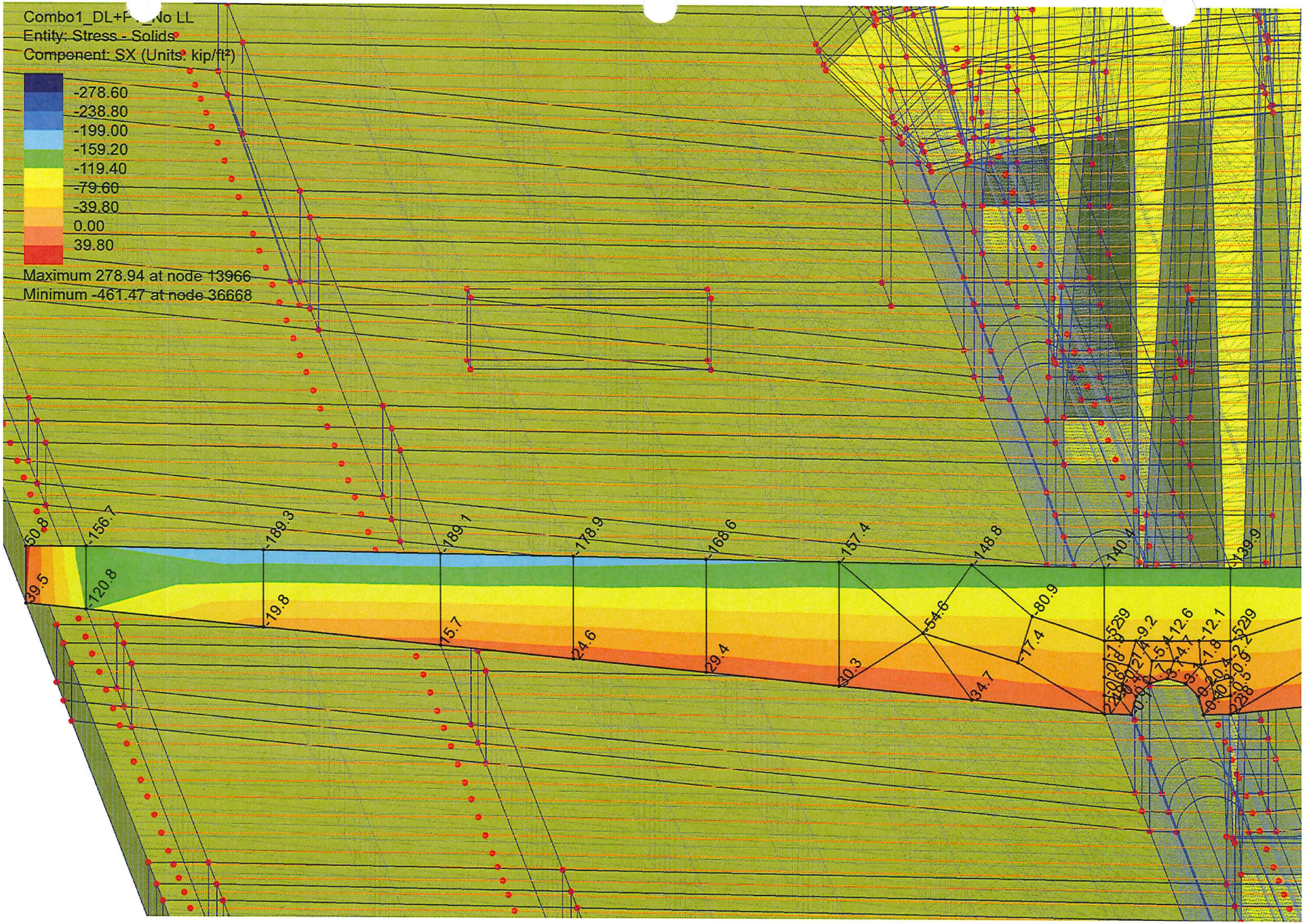
Combo1_DL+P_No LL
Entity: Stress - Solids
Component: SX (Units: kip/ft²)
-278.60
-238.80
-199.00
-159.20
-119.40
-79.60
-39.80
0.00
39.80
Maximum 278.94 at node 13966
Minimum -461.47 at node 36668
-156.7
-189.3
-189.1
-178.9
-168.6
-157.4
-148.8
-140.4
-139.9
-120.8
-19.8
15.7
24.6
29.4
30.3
-54.6
-80.9
-17.4
34.7
-12.1
-12.6
-9.2

XI. DRAWINGS

XI. DRAWINGS

DIRECTION OF STATIONING

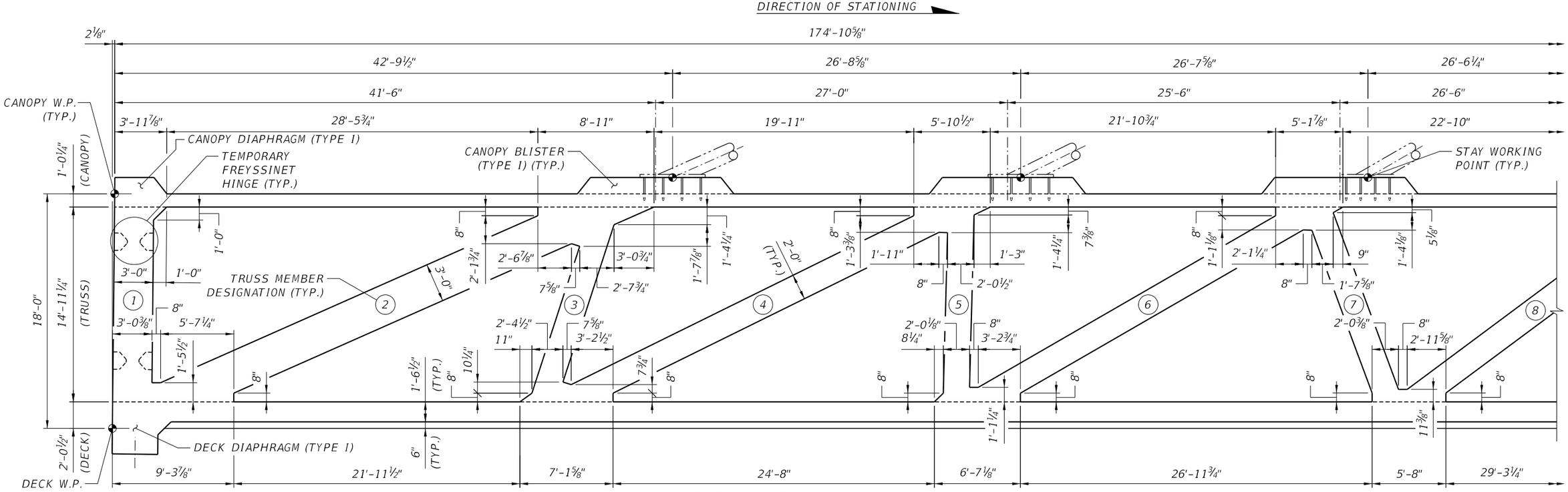

PARTIAL SECTION A-A

NOTES:

1. APPROXIMATE LIFTING WEIGHT OF TRUSS SYSTEM SYSTEM = 950 TONS.
2. FOR TEMPORARY FREYSSINET HINGE DETAILS, SEE MAIN SPAN TRUSS SYSTEM REINFORCEMENT (1 OF 2) DRAWING.

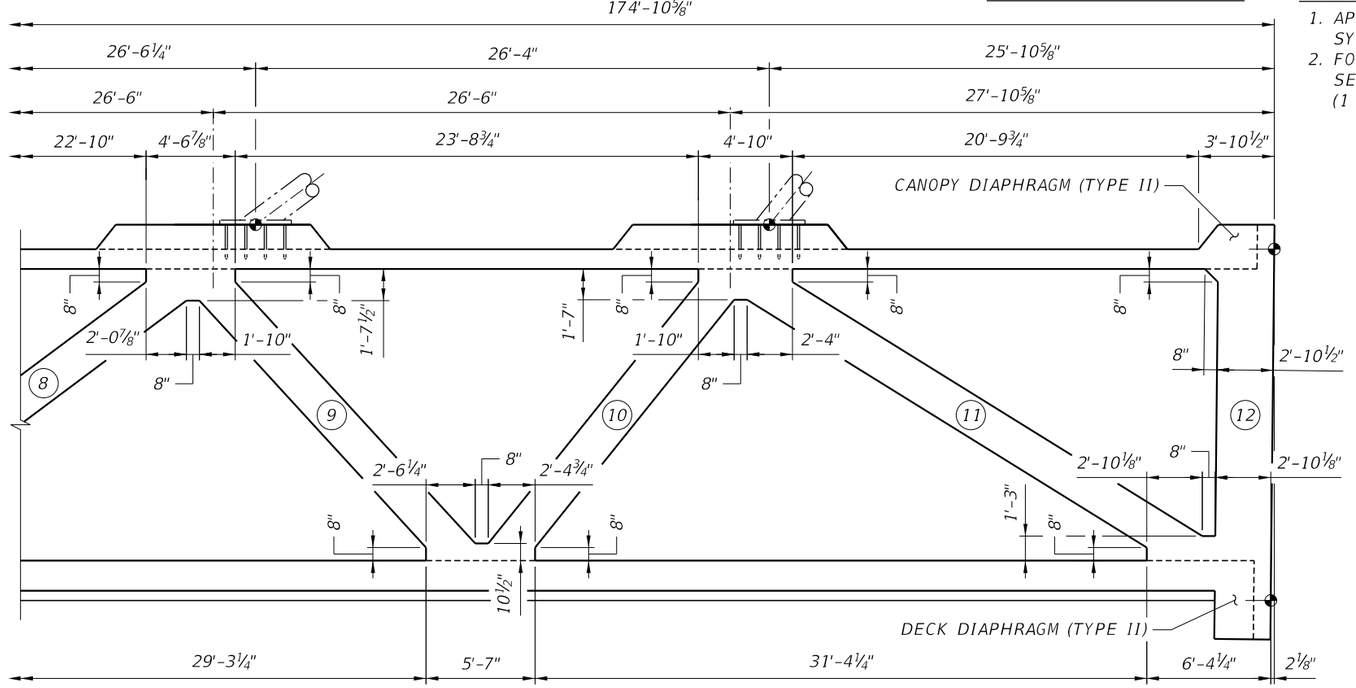

PARTIAL SECTION A-A

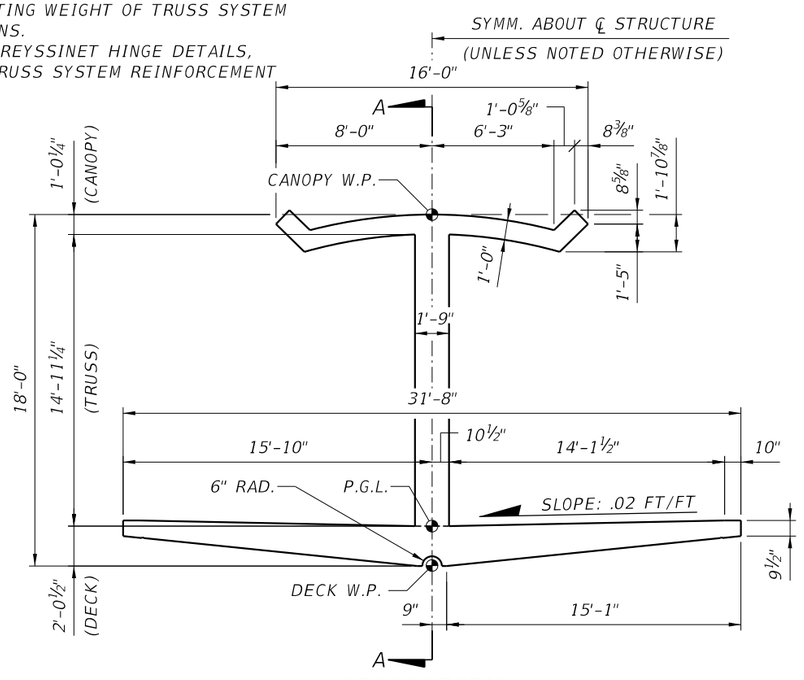

CROSS-SECTION

FINAL SUBMITTAL – NOT FOR CONSTRUCTION – FEBRUARY 2017

REVISIONS					
DATE	BY	DESCRIPTION	DATE	BY	DESCRIPTION

ENGINEER OF RECORD:
FIGG
424 North Calhoun Street
Tallahassee, Florida 32301
FLORIDA CERTIFICATE OF AUTHORIZATION NO. 5618
W. DENNEY PATE, P.E. - P.E. NO. 34332

DRAWN BY:	CHECKED BY:	DESIGNED BY:	CHECKED BY:
DCB	MF	EDL	MF

FIU FLORIDA INTERNATIONAL UNIVERSITY

ROAD NO.	COUNTY	PROJECT ID
	MIAMI-DADE	434688-1-58-01

SHEET TITLE: MAIN SPAN TRUSS SYSTEM LAYOUT

PROJECT NAME: UNIVERSITYCITY PROSPERITY PROJECT

SHEET NO. B-37

Plotted By: lcavanaugh 2/9/2017 2:54:23 PM G:\43468815801\struct\B1_36_MS_Truss_Layout.dgn

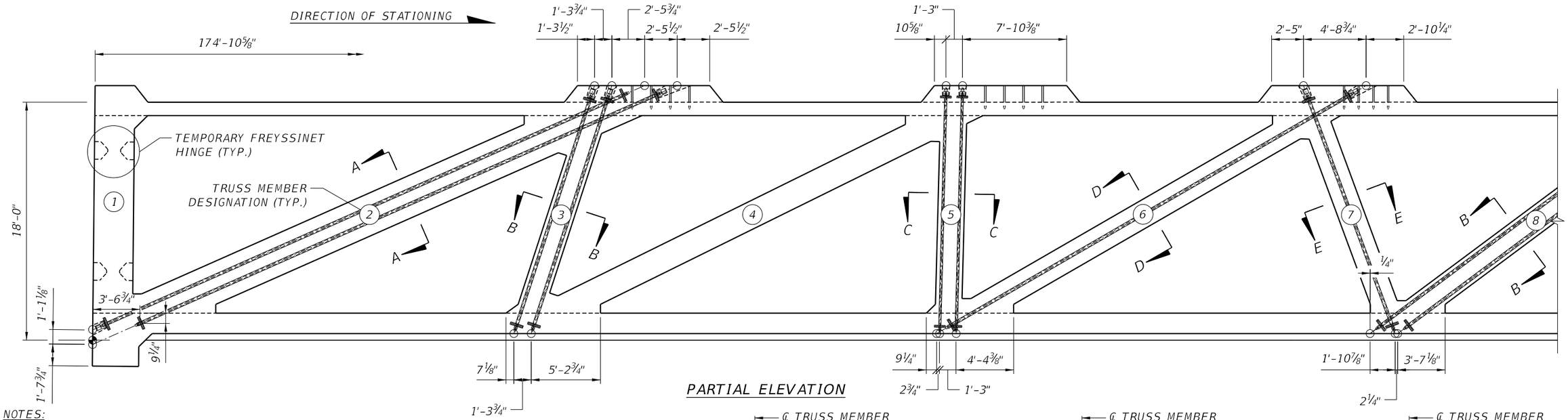

NOTES:

1. FOR P.T. BAR ANCHOR DETAILS, SEE BACK SPAN TRUSS SYSTEM P.T. BAR DETAILS DRAWING.
2. MINIMUN CONCRETE STRENGTH REQUIRED PRIOR TO STRESSING P.T. BARS = 6000 PSI.
3. ALL 1⅜" DIA. P.T. BARS WILL HAVE AN 5"x10" ANCHOR PLATE.
4. ALL 1¾" DIA. P.T. BARS WILL HAVE AN 8"x12" ANCHOR PLATE.
5. ALL 2½" DIA. P.T. BARS WILL HAVE AN 12"x14" ANCHOR PLATE.
6. VERIFY P.T. BAR FORCE WITH LIFT OFF TEST.
7. FOR P.T. BAR QUANTITIES AND STRESSING FORCES, SEE POST-TENSIONING SCHEDULE DRAWING.
8. P.T. BARS IN MEMBERS 2 & 11 WILL NOT BE GROUTED AND WILL BE DESTRESSED AFTER MAIN SPAN CONSTRUCTION IS COMPLETE. DO NOT REMOVE BARS.
9. FOR TEMPORARY FREYSSINET HINGE DETAILS, SEE MAIN SPAN TRUSS SYSTEM REINFORCEMENT (1 OF 2) DRAWING.

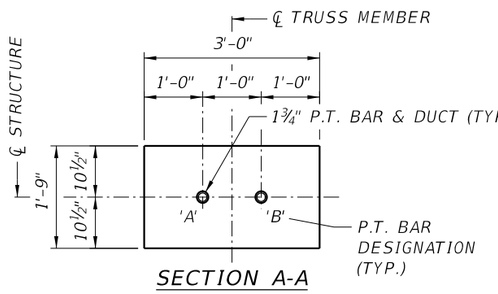

SECTION A-A

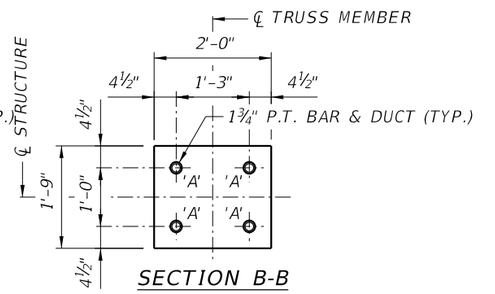

SECTION B-B

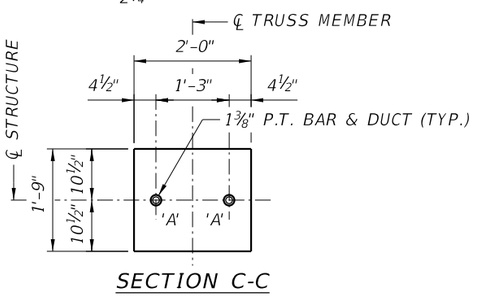

SECTION C-C

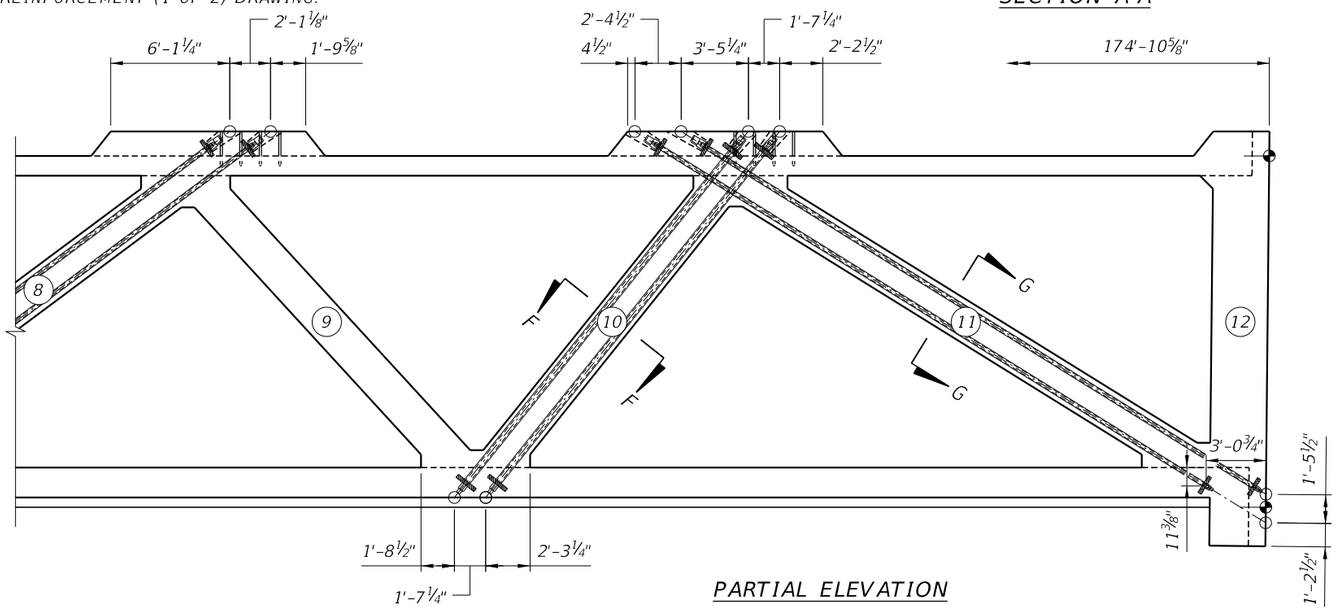

PARTIAL ELEVATION

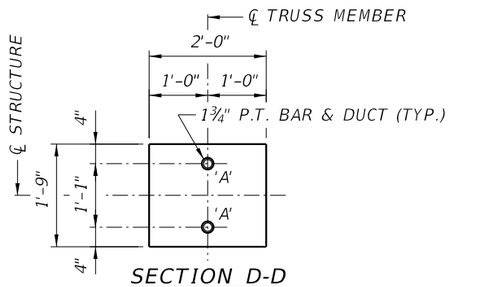

SECTION D-D

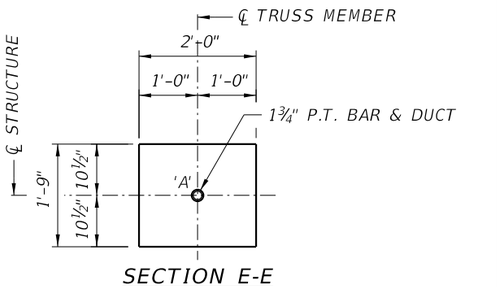

SECTION E-E

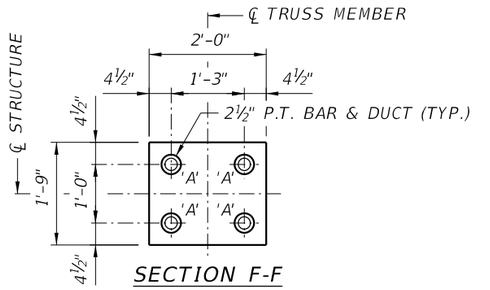

SECTION F-F

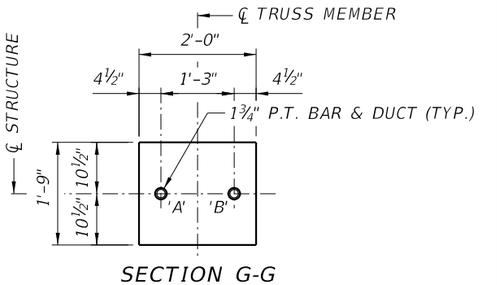

SECTION G-G

FINAL SUBMITTAL - NOT FOR CONSTRUCTION - FEBRUARY 2017

REVISIONS					
DATE	BY	DESCRIPTION	DATE	BY	DESCRIPTION

ENGINEER OF RECORD:
FIGG
424 North Calhoun Street
Tallahassee, Florida 32301
FLORIDA CERTIFICATE OF AUTHORIZATION NO. 5618
W. DENNEY PATE, P.E. - P.E. NO. 34332

DRAWN BY:	CHECKED BY:	DESIGNED BY:	CHECKED BY:
DCB	EDL	EDL	MF

FIU FLORIDA INTERNATIONAL UNIVERSITY

ROAD NO.	COUNTY	PROJECT ID
	MIAMI-DADE	434688-1-58-01

SHEET TITLE: MAIN SPAN TRUSS SYSTEM P.T. BAR DETAILS

PROJECT NAME: UNIVERSITYCITY PROSPERITY PROJECT

SHEET NO. B-38

Plotted By: lcavanaugh 2/9/2017 2:54:24 PM G:\43468815801\struct\B1_37_MS_Truss_PT_Details.dgn

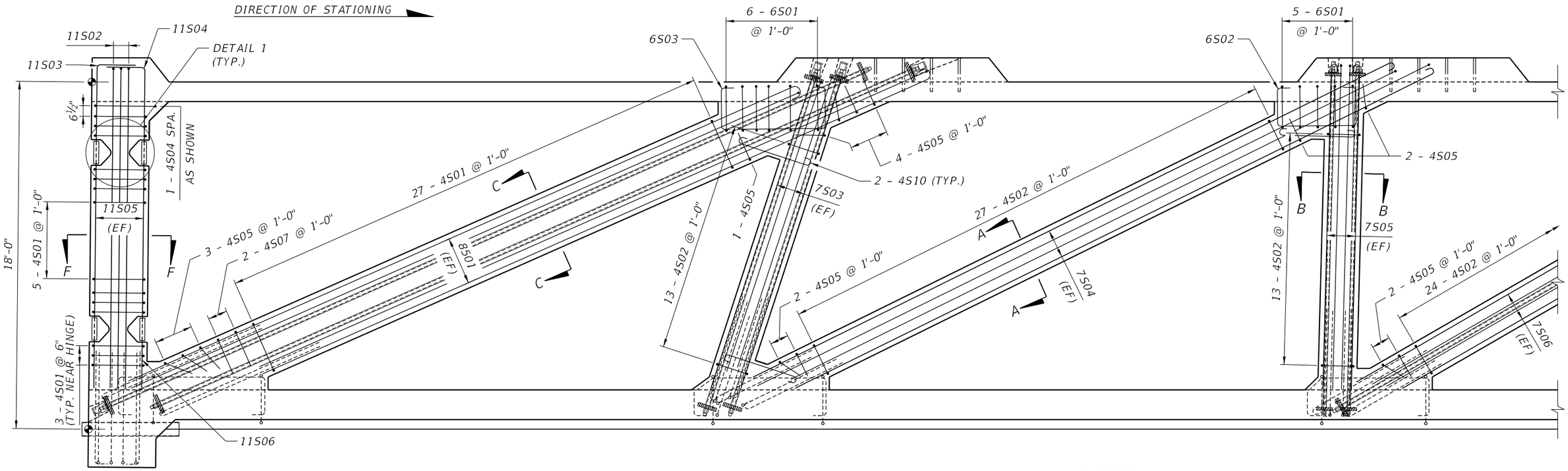

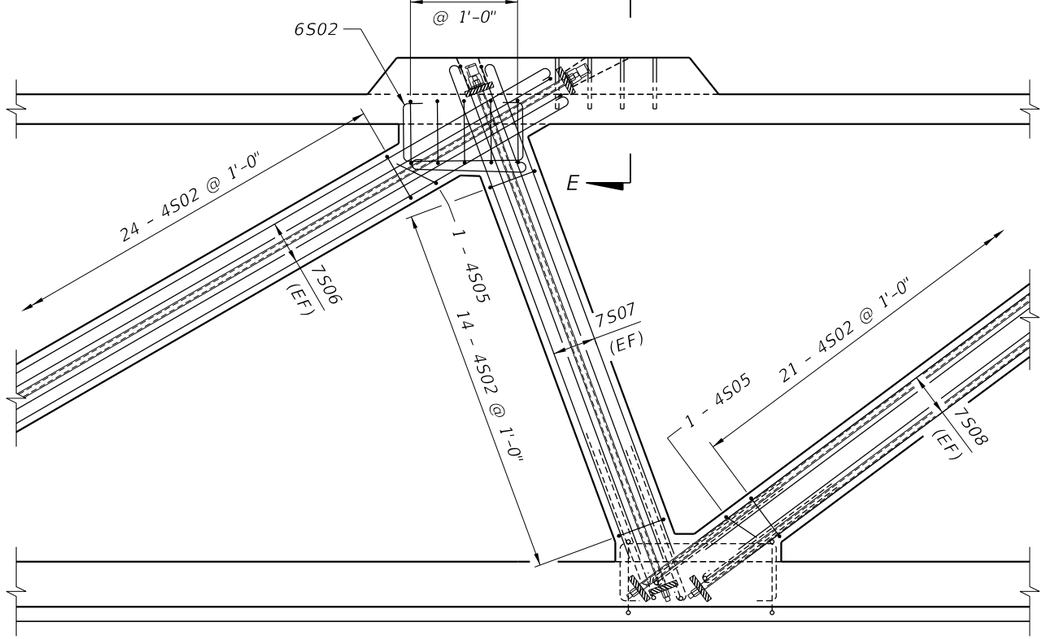

PARTIAL ELEVATION

PARTIAL ELEVATION

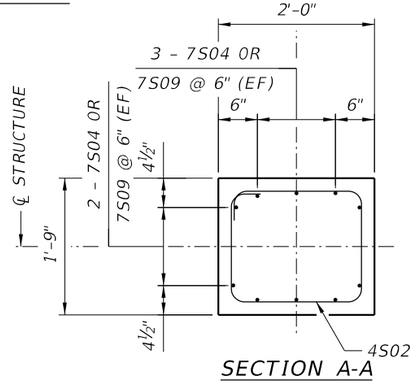

SECTION A-A

(MEMBER WITH NO P.T. BARS)

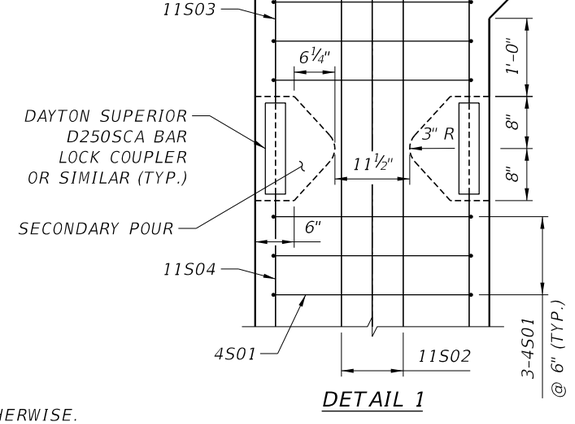

DETAIL 1

NOTES:

1. CONCRETE COVER IS 2", UNLESS NOTED OTHERWISE.
2. FOR P.T. BAR SIZE AND DETAILS, SEE MAIN SPAN TRUSS SYSTEM P.T. BAR DETAILS DRAWING.
3. FOR DECK REINFORCEMENT, SEE DECK REINFORCEMENT AND P.T. MAIN SPAN DRAWINGS.
4. FOR CANOPY REINFORCEMENT, SEE CANOPY REINFORCEMENT AND P.T. MAIN SPAN DRAWINGS.
5. FOR BAR LIST, SEE SUPERSTRUCTURE REINFORCEMENT BAR LIST.
6. DAYTON SUPERIOR D250SCA BAR LOCK COUPLER HAS A LENGTH OF 14" WITH AN OUTSIDE DIAMETER OF 3.1".
7. SECONDARY POUR AT HINGE LOCATIONS SHALL USE THE SAME CONCRETE MIX AS IN THE PRECAST SECTION.
8. SECONDARY POUR SHALL TAKE PLACE 180 DAYS AFTER CASTING OF MAIN SPAN.

FINAL SUBMITTAL - NOT FOR CONSTRUCTION - FEBRUARY 2017

REVISIONS					
DATE	BY	DESCRIPTION	DATE	BY	DESCRIPTION

ENGINEER OF RECORD:
FIGG
424 North Calhoun Street
Tallahassee, Florida 32301
FLORIDA CERTIFICATE OF AUTHORIZATION NO. 5618
W. DENNEY PATE, P.E. - P.E. NO. 34332

DRAWN BY:	DCB
CHECKED BY:	MF
DESIGNED BY:	EDL
CHECKED BY:	MF

FIU FLORIDA INTERNATIONAL UNIVERSITY

ROAD NO.	COUNTY	PROJECT ID
	MIAMI-DADE	434688-1-58-01

SHEET TITLE: MAIN SPAN TRUSS SYSTEM REINFORCEMENT (1 OF 2)

PROJECT NAME: UNIVERSITYCITY PROSPERITY PROJECT

SHEET NO. B-39

Plotted By: lcavanaugh 2/9/2017 2:54:25 PM G:\43468815801\struct\B1_38_MS_Truss_Reinf_01.dgn

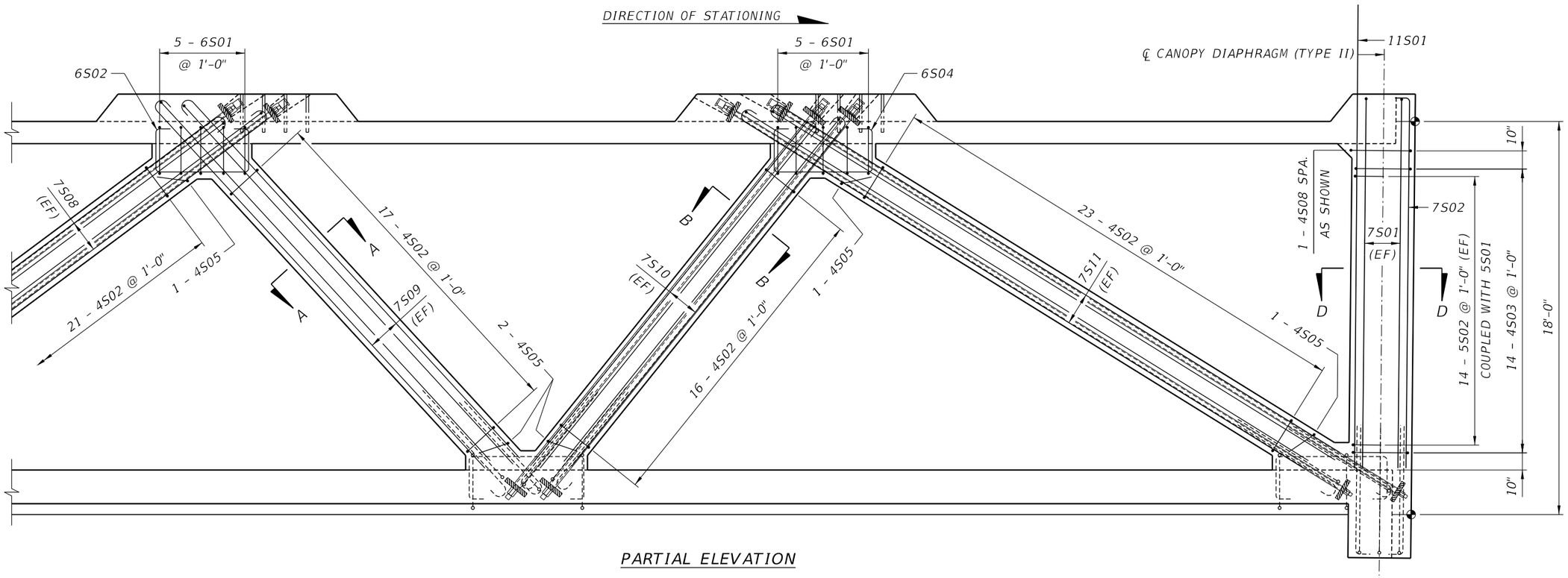

PARTIAL ELEVATION

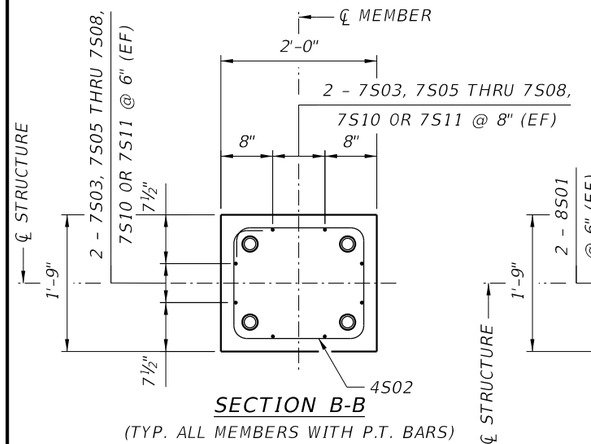

SECTION B-B

(TYP. ALL MEMBERS WITH P.T. BARS)

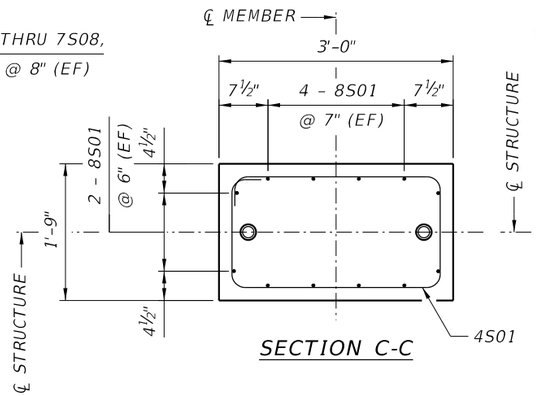

SECTION C-C

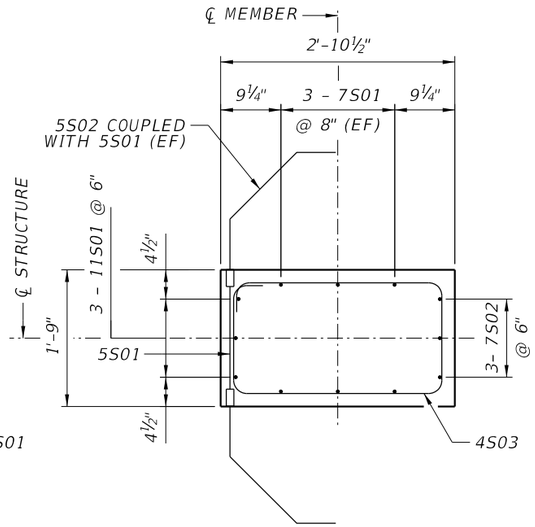

SECTION D-D

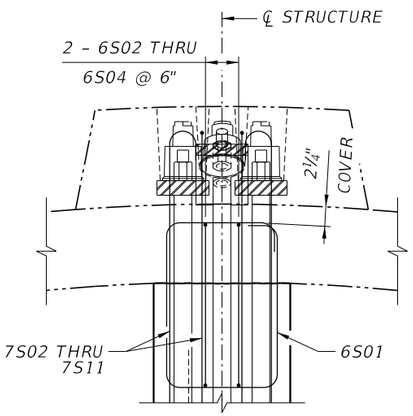

SECTION E-E

(TYP. ALL CANOPY BLISTERS)

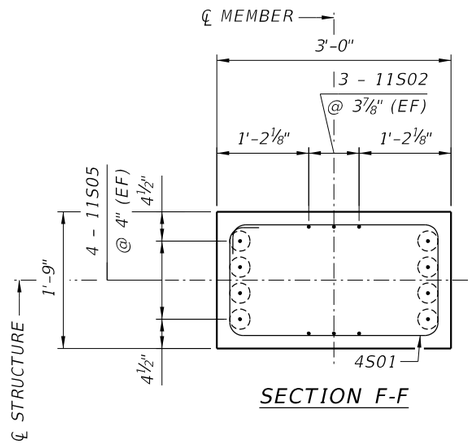

SECTION F-F

NOTES:

1. CONCRETE COVER IS 2", UNLESS NOTED OTHERWISE.
2. FOR P.T. BAR SIZE AND DETAILS, SEE BACK SPAN TRUSS SYSTEM P.T. BAR DETAILS SHEET.
3. FOR DECK REINFORCEMENT, SEE DECK REINFORCEMENT AND P.T. MAIN SPAN SHEETS.
4. FOR CANOPY REINFORCEMENT, SEE CANOPY REINFORCEMENT AND P.T. MAIN SPAN SHEETS.
5. FOR BAR LIST, SEE SUPERSTRUCTURE REINFORCEMENT BAR LIST SHEETS.

FINAL SUBMITTAL - NOT FOR CONSTRUCTION - FEBRUARY 2017

REVISIONS

DATE	BY	DESCRIPTION	DATE	BY	DESCRIPTION

ENGINEER OF RECORD:
FIGG
424 North Calhoun Street
Tallahassee, Florida 32301
FLORIDA CERTIFICATE OF AUTHORIZATION NO. 5618
W. DENNEY PATE, P.E. - P.E. NO. 34332

DRAWN BY:	CHECKED BY:	DESIGNED BY:	CHECKED BY:
DCB	MF	EDL	MF

FLORIDA INTERNATIONAL UNIVERSITY

ROAD NO.	COUNTY	PROJECT ID
	MIAMI-DADE	434688-1-58-01

SHEET TITLE: MAIN SPAN TRUSS SYSTEM REINFORCEMENT (2 OF 2)

PROJECT NAME: UNIVERSITYCITY PROSPERITY PROJECT

SHEET NO. B-40

Plotted By: lcavanaugh 2/9/2017 2:54:25 PM G:\43468815801\struct\B1_39_MS_Truss_Reinf_02.dgn

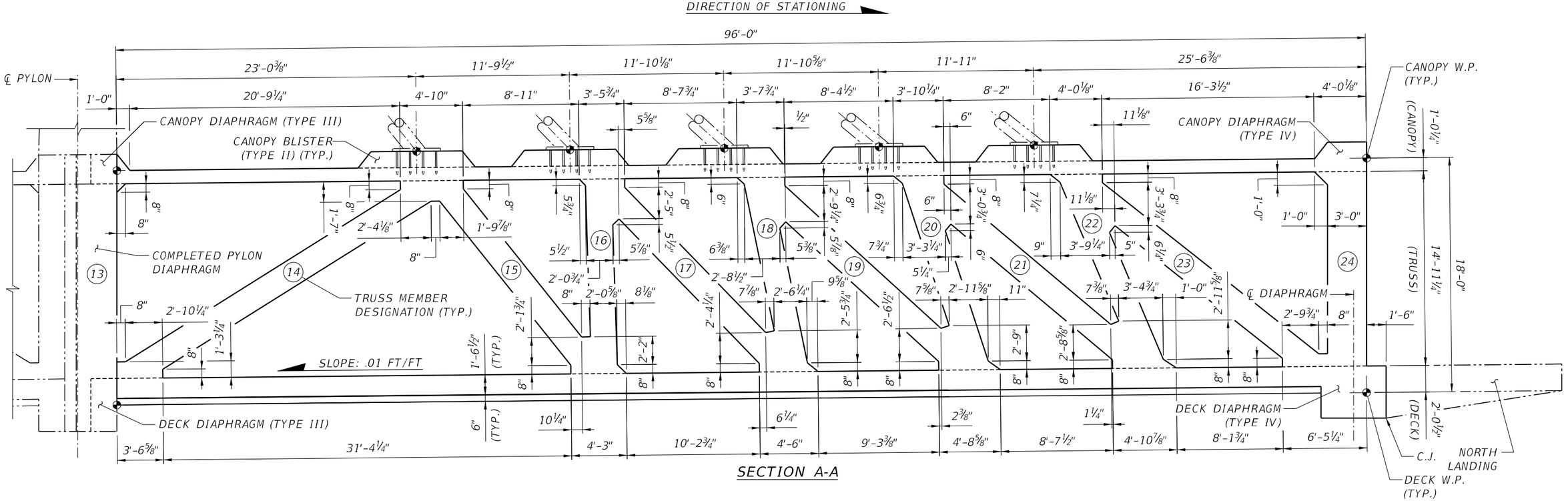

FINAL SUBMITTAL – NOT FOR CONSTRUCTION – FEBRUARY 2017

NOTES:

1. DIMENSIONS SHOWN ARE ALONG ℄ OF TRUSS.
2. TRUSS DIMENSIONS ARE MEASURED ALONG THE LONGITUDINAL SLOPE.
3. FOR CONCRETE COMPRESSIVE STRENGTH, SEE GENERAL NOTES DRAWING.
4. FOR CONSTRUCTION SEQUENCE AND DETAILS OF THE BACK SPAN, SEE CONSTRUCTION SEQUENCE (1 OF 2) AND (2 OF 2) DRAWINGS.

REVISIONS					
DATE	BY	DESCRIPTION	DATE	BY	DESCRIPTION

ENGINEER OF RECORD:
FIGG
424 North Calhoun Street
Tallahassee, Florida 32301
FLORIDA CERTIFICATE OF AUTHORIZATION NO. 5618
W. DENNEY PATE, P.E. - P.E. NO. 34332

DRAWN BY:	CHECKED BY:	DESIGNED BY:	CHECKED BY:
DCB	MF	EDL	MF

FIU FLORIDA INTERNATIONAL UNIVERSITY

ROAD NO.	COUNTY	PROJECT ID
	MIAMI-DADE	434688-1-58-01

SHEET TITLE: BACK SPAN TRUSS SYSTEM LAYOUT

PROJECT NAME: UNIVERSITYCITY PROSPERITY PROJECT

SHEET NO. B-41

Plotted By: lcavanaugh 2/9/2017 2:54:26 PM G:\43468815801\struct\B1_40_BS_Truss_Layout.dgn

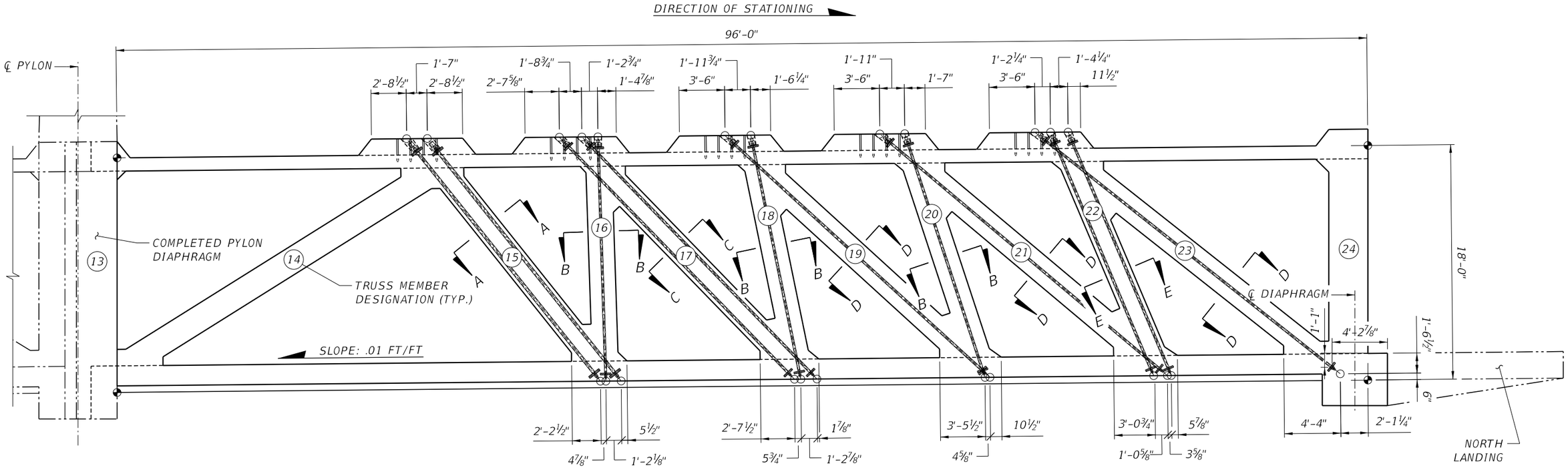

ELEVATION

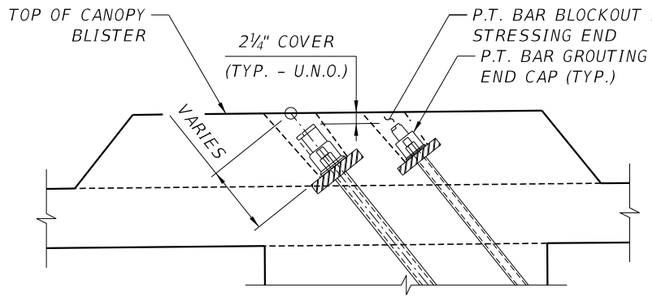

P.T. BAR ANCHOR DETAIL
(TOP ANCHOR)

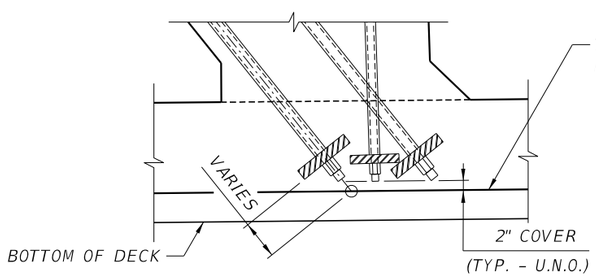

P.T. BAR ANCHOR DETAIL
(BOTTOM ANCHOR)

NOTES:

1. MINIMUM CONCRETE STRENGTH REQUIRED PRIOR TO STRESSING P.T. BARS = 6000 PSI.
2. ALL 1⅜" DIA. P.T. BARS WILL HAVE AN 5"x10" ANCHOR PLATE.
3. ALL 1¾" DIA. P.T. BARS WILL HAVE AN 8"x12" ANCHOR PLATE.
4. FOR STRESSING FORCES, SEE POST-TENSIONING SCHEDULE DRAWING.
5. P.T. BAR GROUTING END CAPS ARE NOT NEEDED FOR P.T. BARS WHICH ARE DESTRESSED AFTER CONSTRUCTION SEQUENCE.

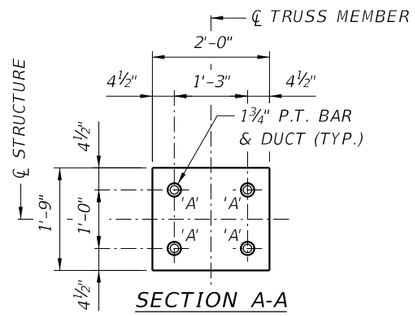

SECTION A-A

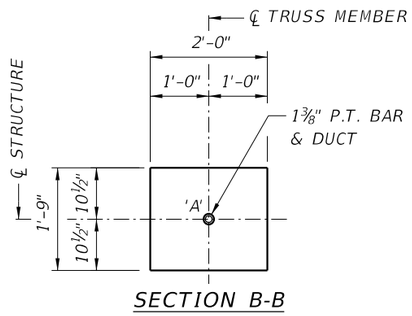

SECTION B-B

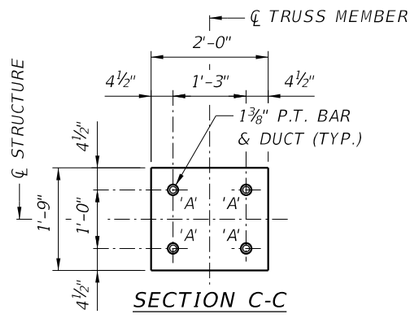

SECTION C-C

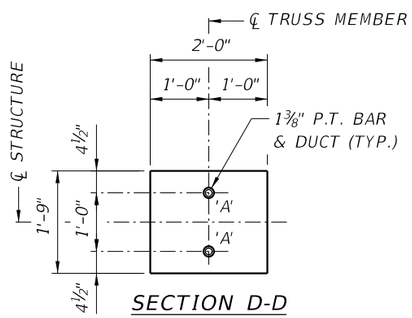

SECTION D-D

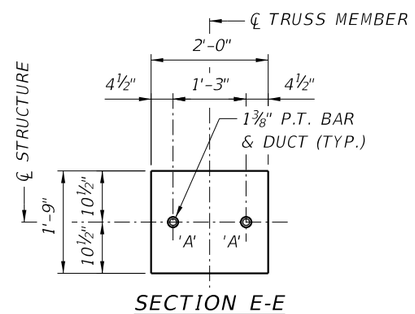

SECTION E-E

FINAL SUBMITTAL - NOT FOR CONSTRUCTION - FEBRUARY 2017

REVISIONS					
DATE	BY	DESCRIPTION	DATE	BY	DESCRIPTION

ENGINEER OF RECORD:
FIGG
424 North Calhoun Street
Tallahassee, Florida 32301
FLORIDA CERTIFICATE OF AUTHORIZATION NO. 5618
W. DENNEY PATE, P.E. - P.E. NO. 34332

DRAWN BY: DCB
CHECKED BY: MF
DESIGNED BY: EDL
CHECKED BY: MF

FIU FLORIDA INTERNATIONAL UNIVERSITY

ROAD NO.	COUNTY	PROJECT ID
	MIAMI-DADE	434688-1-58-01

SHEET TITLE: BACK SPAN TRUSS SYSTEM P.T. BAR DETAILS

PROJECT NAME: UNIVERSITYCITY PROSPERITY PROJECT

SHEET NO. B-42

1444

Plotted By: lcavanaugh 2/9/2017 2:54:26 PM G:\43468815801\struct\B1_41_BS_Truss_PT_Layout.dgn

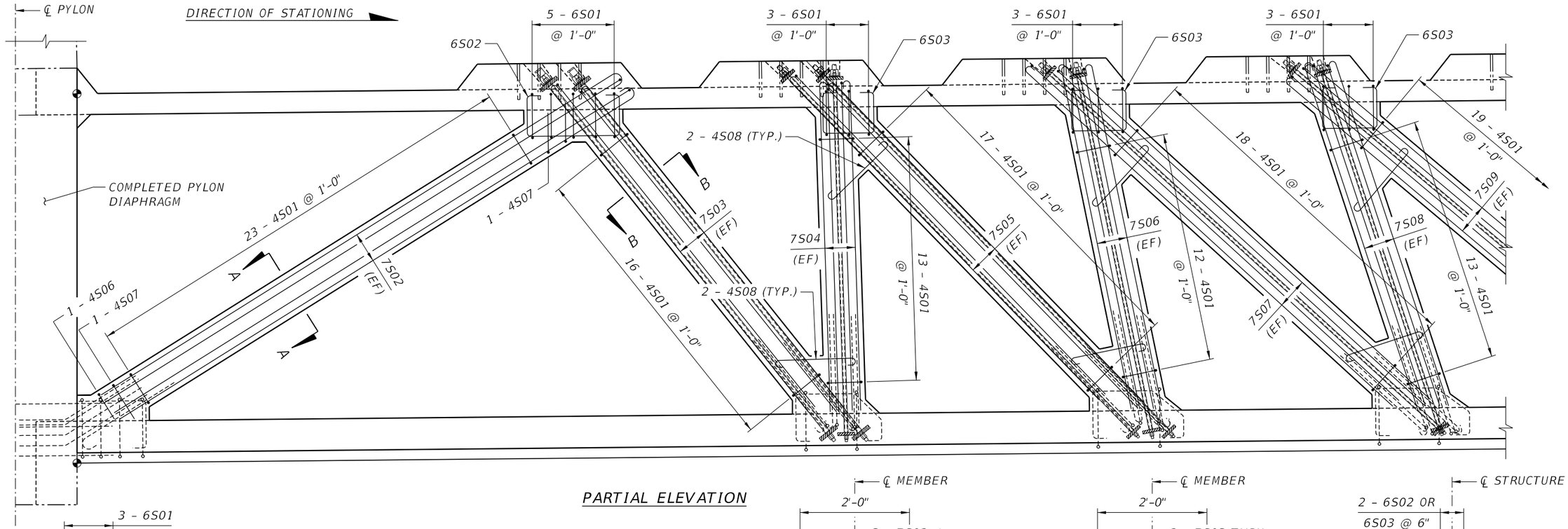

PARTIAL ELEVATION

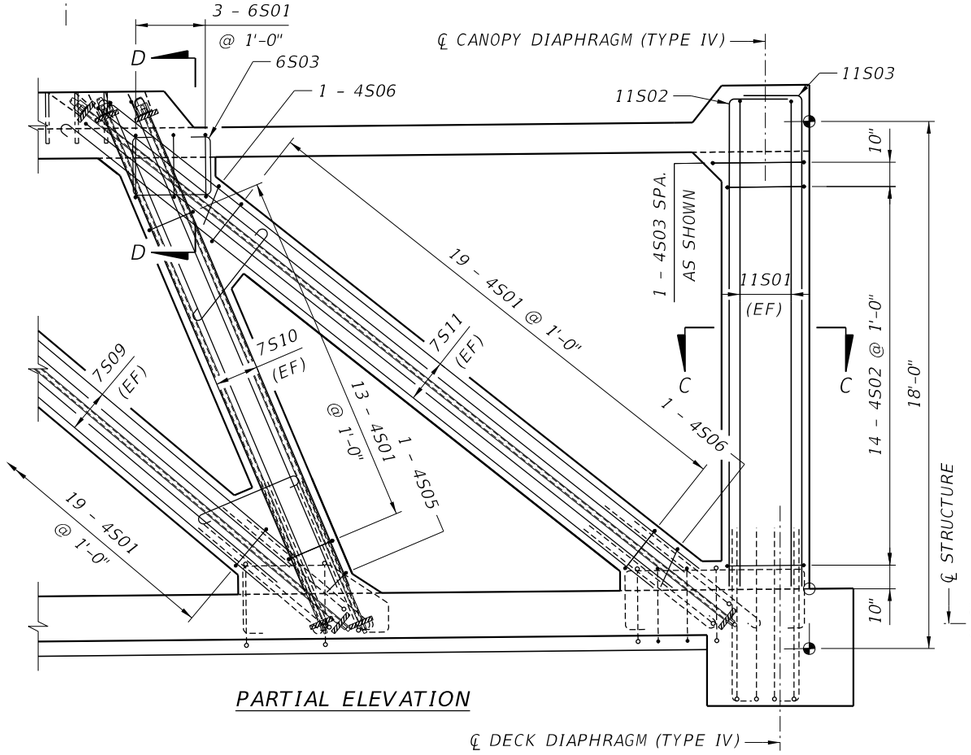

PARTIAL ELEVATION

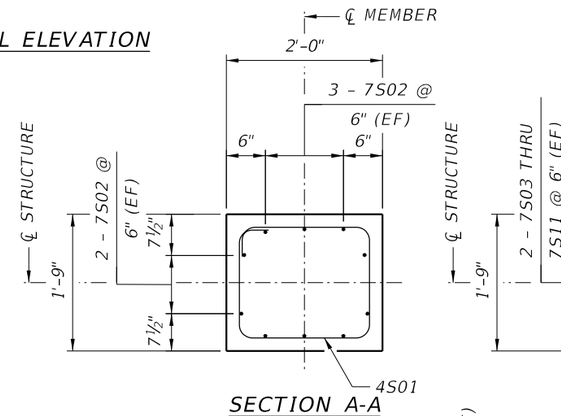

SECTION A-A

(MEMBER WITH NO P.T. BARS)

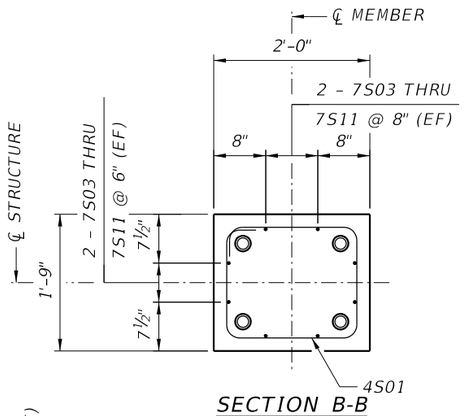

SECTION B-B

(TYP. ALL MEMBERS WITH P.T. BARS)

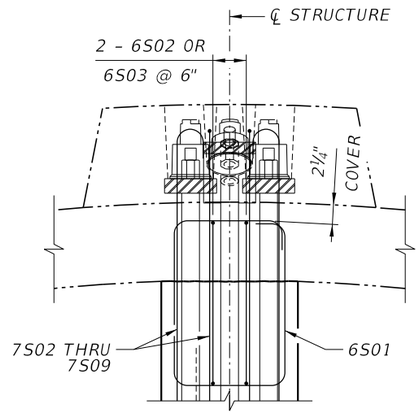

SECTION D-D

(TYP. ALL CANOPY BLISTERS)

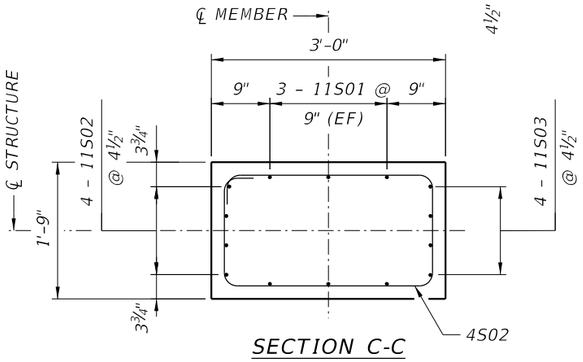

SECTION C-C

NOTES:

1. CONCRETE COVER IS 2", UNLESS NOTED OTHERWISE.
2. FOR P.T. BAR SIZE AND DETAILS, SEE BACK SPAN TRUSS SYSTEM P.T. BAR DETAILS SHEET.
3. FOR DECK REINFORCEMENT, SEE DECK REINFORCEMENT AND P.T. BACK SPAN SHEETS.
4. FOR CANOPY REINFORCEMENT, SEE CANOPY REINFORCEMENT AND P.T. BACK SPAN SHEETS.
5. FOR BAR LIST, SEE SUPERSTRUCTURE REINFORCEMENT BAR LIST SHEETS.

FINAL SUBMITTAL – NOT FOR CONSTRUCTION – FEBRUARY 2017

REVISIONS

DATE	BY	DESCRIPTION	DATE	BY	DESCRIPTION

ENGINEER OF RECORD:
FIGG
424 North Calhoun Street
Tallahassee, Florida 32301
FLORIDA CERTIFICATE OF AUTHORIZATION NO. 5618
W. DENNEY PATE, P.E. - P.E. NO. 34332

DRAWN BY:	CHECKED BY:	DESIGNED BY:	CHECKED BY:
DCB	EDL	EDL	MF

FIU FLORIDA INTERNATIONAL UNIVERSITY

ROAD NO.	COUNTY	PROJECT ID
	MIAMI-DADE	434688-1-58-01

SHEET TITLE: BACK SPAN TRUSS SYSTEM REINFORCEMENT

PROJECT NAME: UNIVERSITYCITY PROSPERITY PROJECT

SHEET NO. B-43

Plotted By: lcavanaugh 2/9/2017 2:54:27 PM G:\43468815801\struct\B1_42_BS_Truss_Reinf_01.dgn

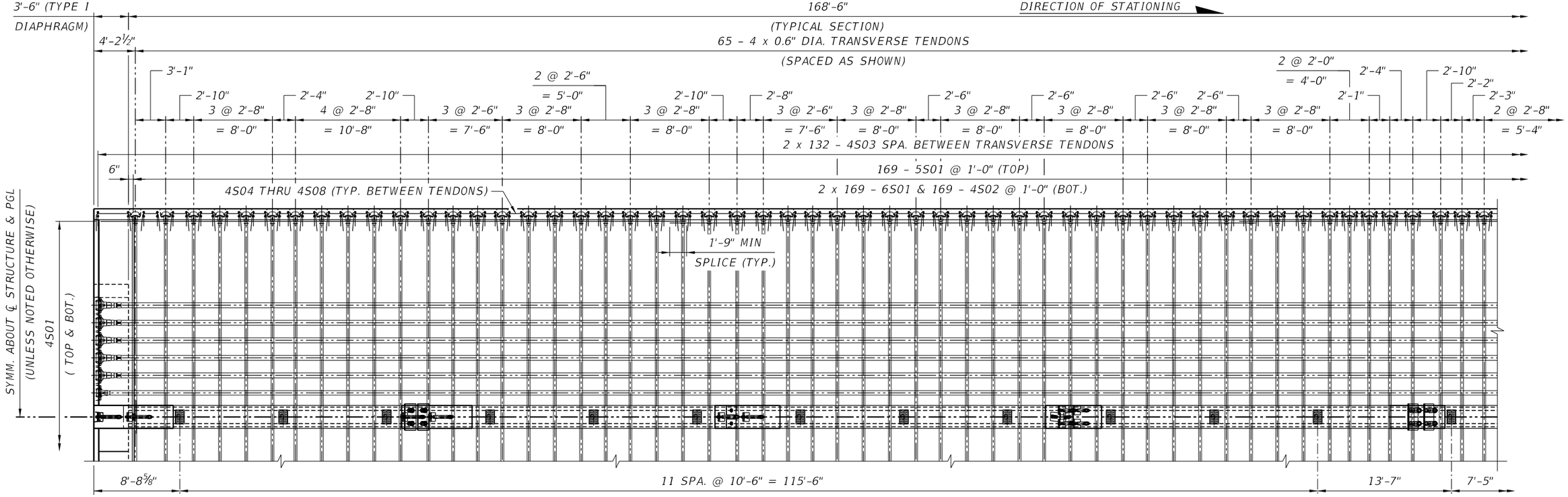

PARTIAL PLAN
(DISTORTED VERTICAL SCALE)

NOTES:

1. FOR ADDITIONAL MAIN SPAN DETAILS, SEE MAIN SPAN TRUSS SYSTEM P.T. BAR DETAILS DRAWING.
2. FOR TYPE I DIAPHRAGM DETAILS, SEE DECK END DIAPHRAGM REINFORCEMENT - TYPE I DRAWING.
3. FOR TYPE II DIAPHRAGM DETAILS, SEE DECK END DIAPHRAGM REINFORCEMENT - TYPE II DRAWING.
4. FOR ADDITIONAL TRUSS DETAILS, SEE MAIN SPAN TRUSS SYSTEM REINFORCEMENT DRAWINGS.
5. FOR ADDITIONAL DRAIN PIPE DETAILS, SEE DRAINAGE DETAILS DRAWING.
6. CONCRETE COVER IS 2" UNLESS NOTED OTHERWISE.
7. FOR BAR LIST, SEE SUPERSTRUCTURE REINFORCEMENT BAR LIST DRAWINGS.
8. SUPPORT TO REMAIN WITHIN LIMITS OF DIAPHRAGM DURING SPMT TRANSPORT.
9. MAIN SPAN ELEMENT TO REMAIN VERTICAL DURING SPMT TRANSPORT.
10. THE UNISTRUT SHALL BE PROJECTED ¼" FROM FACE OF DECK. THE UNISTRUT LENGTH IS EQUAL TO 3'-0".
11. PLACE TWO (2) ADDITIONAL 4S03 BARS PER FENCE POST. SEE MISSILE GUARD AND RAILING DETAILS SHEETS FOR POST SPACING AND BAR PLACEMENT.
12. BASED ON THE CONTRACTOR'S MEANS AND METHODS, PULL BOXES MAY BE REQUIRED TO INSTALL ELECTRICAL CABLE.

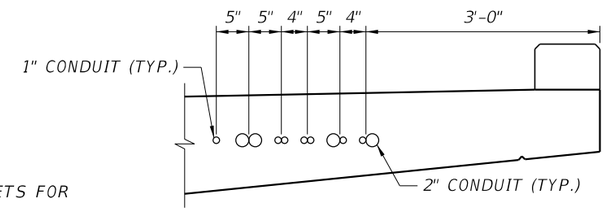

ELECTRICAL CONDUITS DETAIL
(N.T.S.)

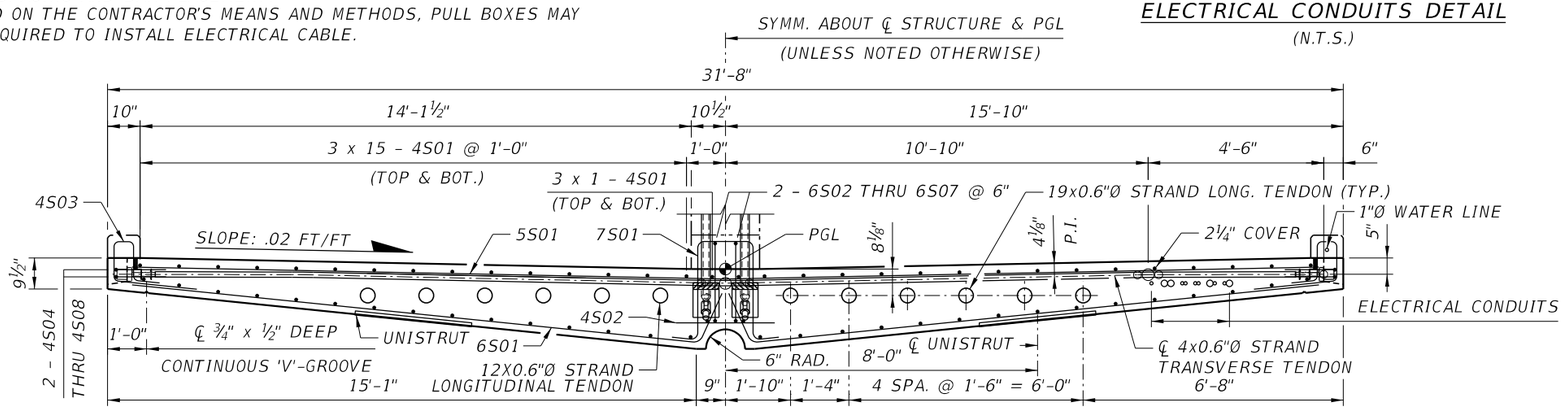

LONG TENDON CROSS SECTION
(LOOKING UPSTATION)

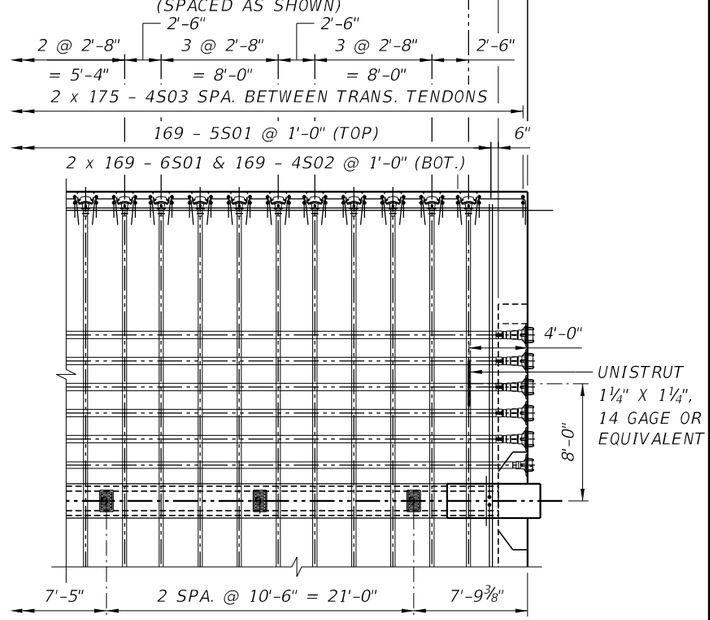

PARTIAL PLAN (CONT.)
(DISTORTED VERTICAL SCALE)

FINAL SUBMITTAL - NOT FOR CONSTRUCTION - FEBRUARY 2017

REVISIONS					
DATE	BY	DESCRIPTION	DATE	BY	DESCRIPTION

ENGINEER OF RECORD:
FIGG
424 North Calhoun Street
Tallahassee, Florida 32301
FLORIDA CERTIFICATE OF AUTHORIZATION NO. 5618
W. DENNEY PATE, P.E. - P.E. NO. 34332

DRAWN BY:	CHECKED BY:	DESIGNED BY:	CHECKED BY:
DCB	EDL	EDL	MF

FIU FLORIDA INTERNATIONAL UNIVERSITY

ROAD NO.	COUNTY	PROJECT ID
	MIAMI-DADE	434688-1-58-01

SHEET TITLE: DECK REINFORCEMENT & P.T.- MAIN SPAN (1 OF 2)

PROJECT NAME: UNIVERSITYCITY PROSPERITY PROJECT

SHEET NO. B-60

Plotted By: lcavanaugh 2/9/2017 2:54:36 PM G:\43468815801\struct\B1_60_MS_Deck_Reinf&PT_01.DGN

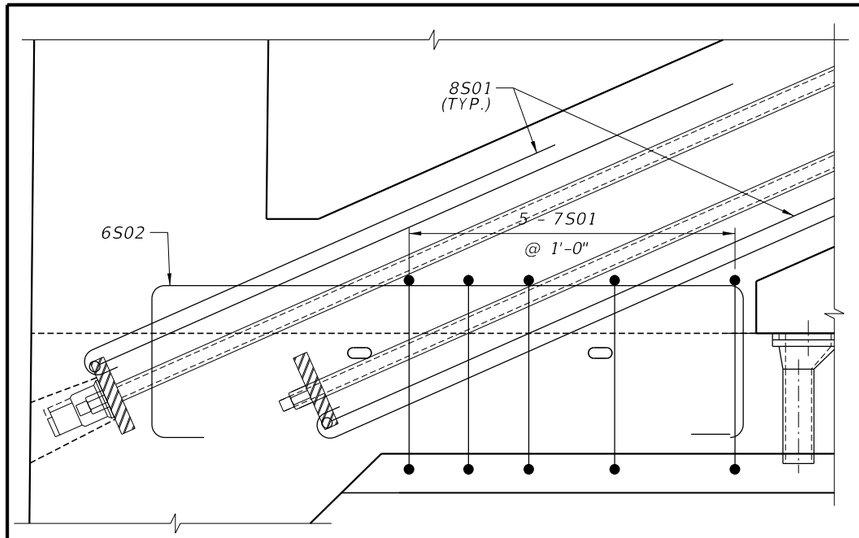

TRUSS MEMBERS 1 & 2
CONNECTION DETAIL

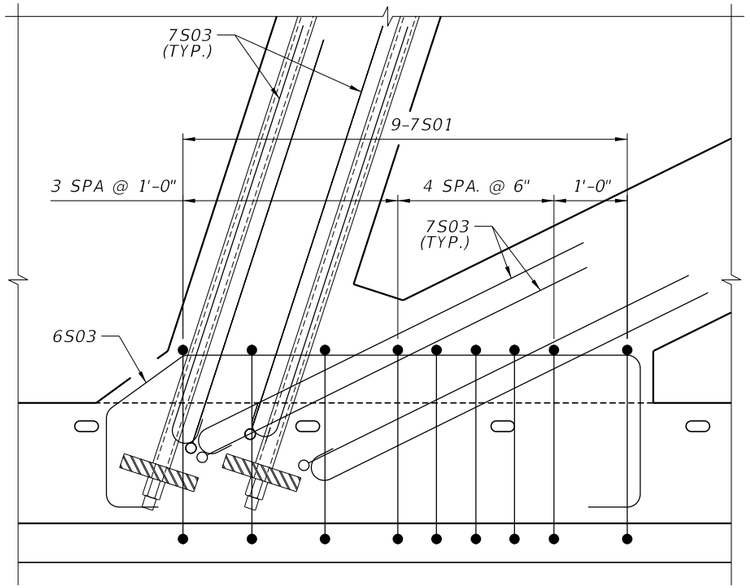

TRUSS MEMBERS 3 & 4
CONNECTION DETAIL

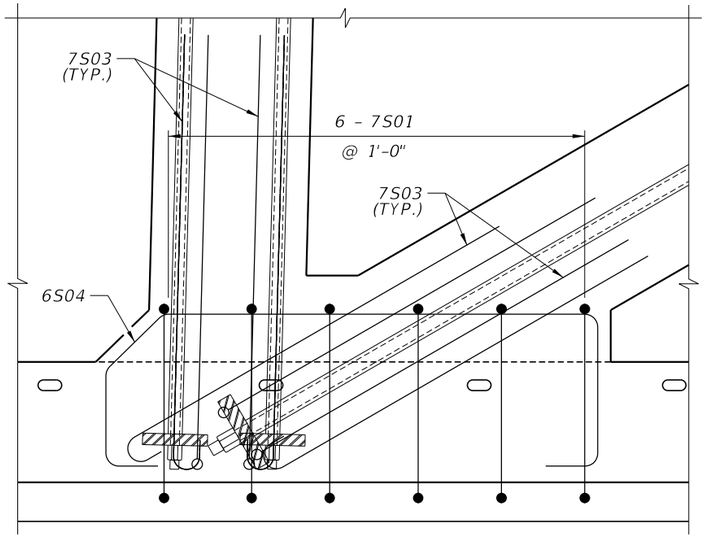

TRUSS MEMBERS 5 & 6
CONNECTION DETAIL

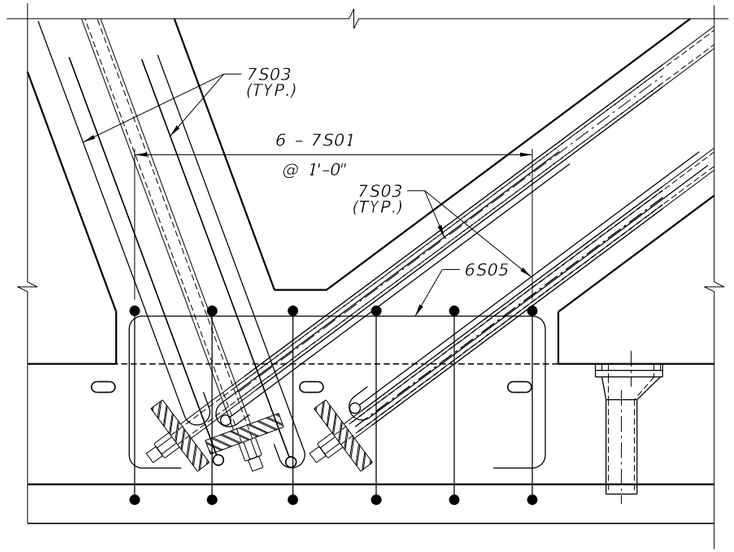

TRUSS MEMBERS 7 & 8
CONNECTION DETAIL

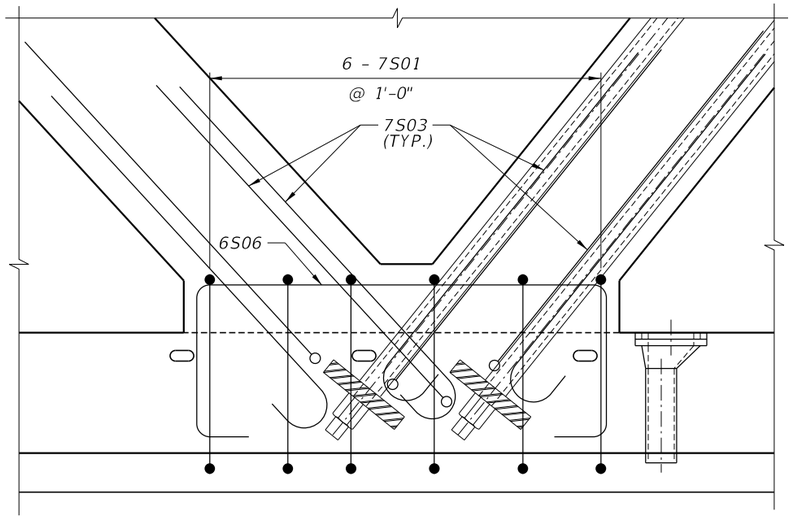

TRUSS MEMBERS 9 & 10
CONNECTION DETAIL

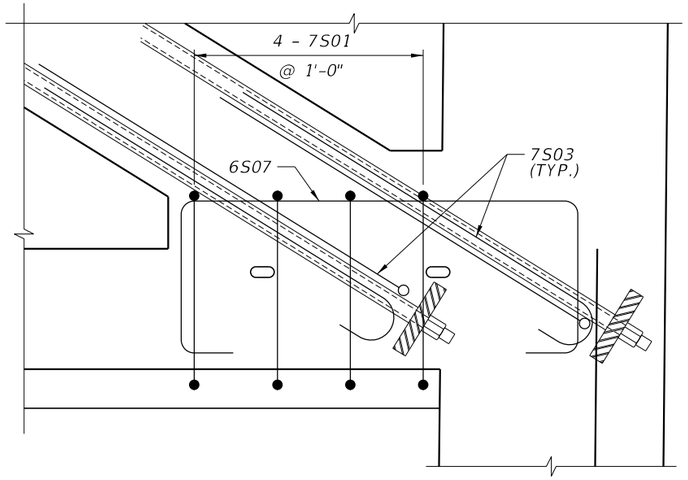

TRUSS MEMBERS 11 & 12
CONNECTION DETAIL

NOTES:

1. FOR ADDITIONAL MAIN SPAN DETAILS, SEE MAIN SPAN TRUSS SYSTEM P.T.BAR DETAILS DRAWING.
2. FOR TYPE I DIAPHRAGM DETAILS, SEE DECK END DIAPHRAGM REINFORCEMENT - TYPE I DRAWING.
3. FOR TYPE II DIAPHRAGM DETAILS, SEE DECK END DIAPHRAGM REINFORCEMENT - TYPE II DRAWING.
4. FOR ADDITIONAL TRUSS DETAILS, SEE MAIN SPAN TRUSS SYSTEM REINFORCEMEMT DRAWINGS.
5. FOR ADDITIONAL DRAIN PIPE DETAILS, SEE DRAINAGE DETAILS DRAWING.
6. CONCRETE COVER IS 2" UNLESS NOTED OTHERWISE.
7. FOR BAR LIST, SEE SUPERSTRUCTURE REINFORCEMENT BAR LIST SHEETS.

FINAL SUBMITTAL - NOT FOR CONSTRUCTION - FEBRUARY 2017

REVISIONS

DATE	BY	DESCRIPTION	DATE	BY	DESCRIPTION

ENGINEER OF RECORD:
424 North Calhoun Street
Tallahassee, Florida 32301
FLORIDA CERTIFICATE OF AUTHORIZATION NO. 5618
W. DENNEY PATE, P.E. - P.E. NO. 34332

DRAWN BY: DCB
CHECKED BY: EDL
DESIGNED BY: EDL
CHECKED BY: MF

FIU FLORIDA INTERNATIONAL UNIVERSITY

ROAD NO.	COUNTY	PROJECT ID
	MIAMI-DADE	434688-1-58-01

SHEET TITLE: DECK REINFORCEMENT & P.T. - MAIN SPAN (2 OF 2)

PROJECT NAME: UNIVERSITYCITY PROSPERITY PROJECT

SHEET NO. B-61

Plotted By: lcavanaugh 2/9/2017 2:54:37 PM G:\43468815801\struct\B1_61_MS_Deck_Reinf&PT_02.DGN

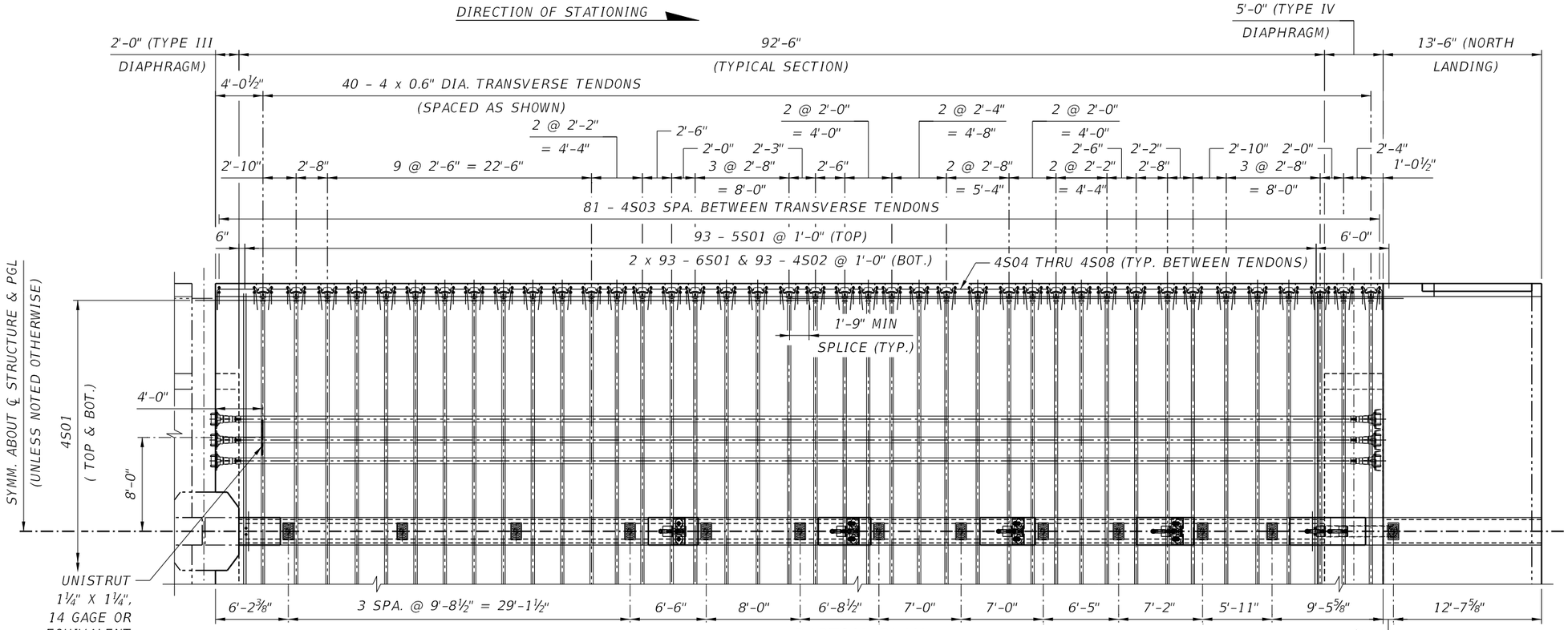

PARTIAL PLAN
(DISTORTED VERTICAL SCALE)

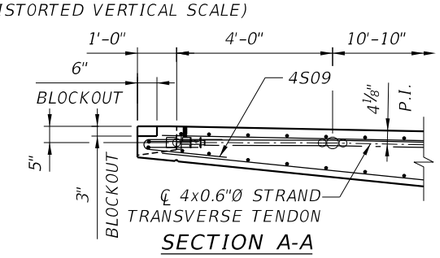

SECTION A-A

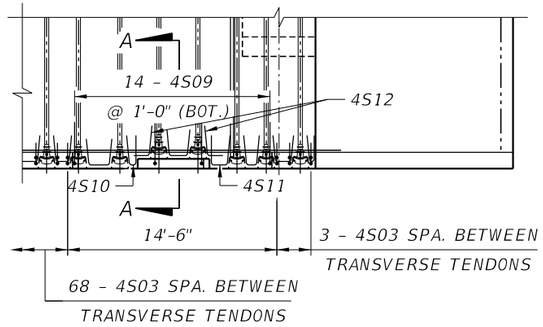

PARTIAL PLAN
(RIGHT WING)

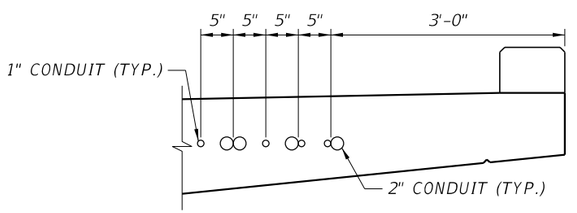

ELECTRICAL CONDUITS DETAIL
(N.T.S.)

NOTES:

1. FOR ADDITIONAL BACK SPAN DETAILS, SEE BACK SPAN TRUSS SYSTEM LAYOUT DRAWING.
2. FOR TYPE III DIAPHRAGM DETAILS, SEE DECK END DIAPHRAGM REINFORCEMENT - TYPE III DRAWING.
3. FOR TYPE IV DIAPHRAGM DETAILS, SEE DECK END DIAPHRAGM REINFORCEMENT - TYPE IV DRAWING.
4. FOR ADDITIONAL TRUSS DETAILS, SEE BACK SPAN TRUSS SYSTEM DETAIL DRAWINGS.
5. FOR ADDITIONAL DRAIN PIPE DETAILS, SEE DRAINAGE DETAILS DRAWING.
6. CONCRETE COVER IS 2" UNLESS OTHERWISE NOTED.
7. FOR BAR LIST, SEE SUPERSTRUCTURE REINFORCEMENT BAR LIST DRAWING.
8. FOR NORTH LANDING POST-TENSIONING AND REINFORCEMENT DETAILS, SEE DECK TRANSVERSE REINFORCEMENT & POST-TENSIONING - NORTH LANDING DRAWING.
9. THE UNISTRUT SHALL BE PROJECTED ¼" FROM THE FACE OF DECK. THE UNISTRUT LENGTH IS EQUAL TO 3'-0".
10. PLACE TWO (2) ADDITIONAL 4S03 BARS PER FENCE POST. SEE MISSILE GUARD AND RAILING DETAILS SHEETS FOR POST SPACING AND BAR PLACEMENT.
11. BASED ON THE CONTRACTOR'S MEANS AND METHODS, PULL BOXES MAY BE REQUIRED TO INSTALL ELECTRICAL CABLE.

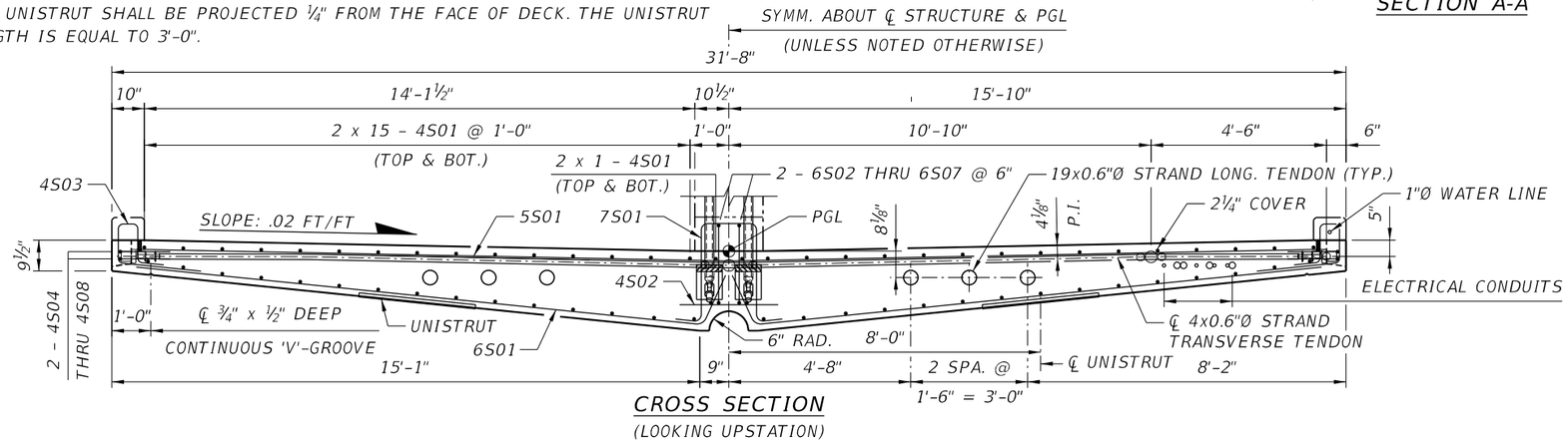

CROSS SECTION
(LOOKING UPSTATION)

FINAL SUBMITTAL - NOT FOR CONSTRUCTION - FEBRUARY 2017

REVISIONS					
DATE	BY	DESCRIPTION	DATE	BY	DESCRIPTION

ENGINEER OF RECORD:
FIGG
424 North Calhoun Street
Tallahassee, Florida 32301
FLORIDA CERTIFICATE OF AUTHORIZATION NO. 5618
W. DENNEY PATE, P.E. - P.E. NO. 34332

DRAWN BY:	CHECKED BY:	DESIGNED BY:	CHECKED BY:
DCB	EDL	EDL	MF

FIU FLORIDA INTERNATIONAL UNIVERSITY

ROAD NO.	COUNTY	PROJECT ID
	MIAMI-DADE	434688-1-58-01

SHEET TITLE: DECK REINFORCEMENT & P.T. - BACK SPAN (1 OF 2)

PROJECT NAME: UNIVERSITYCITY PROSPERITY PROJECT

SHEET NO. B-62

Plotted By: lcavanaugh 2/9/2017 2:54:38 PM G:\43468815801\struct\B1_62_BS_Deck_Reinf&PT_01.DGN

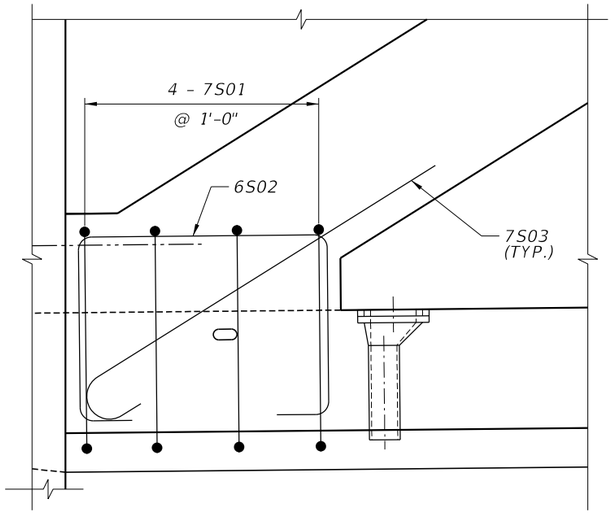

TRUSS MEMBERS 13 & 14
CONNECTION DETAIL

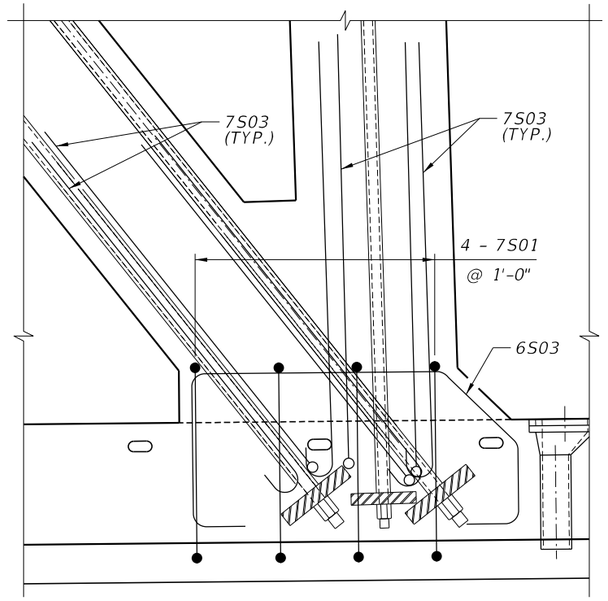

TRUSS MEMBERS 15 & 16
CONNECTION DETAIL

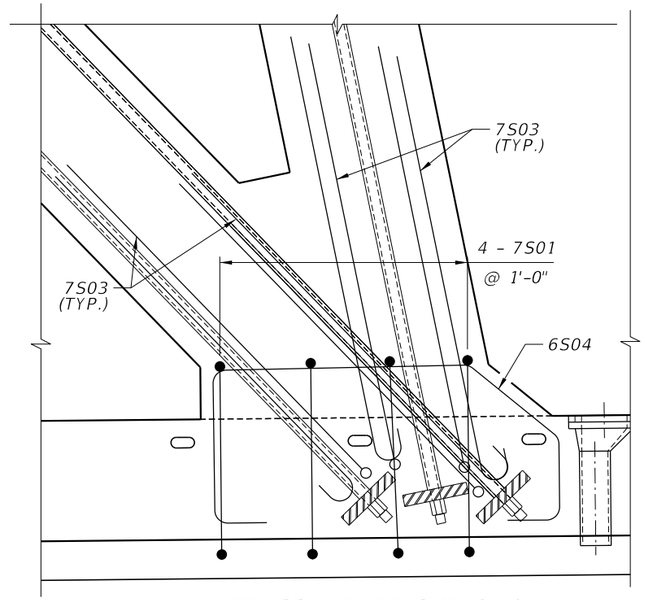

TRUSS MEMBERS 17 & 18
CONNECTION DETAIL

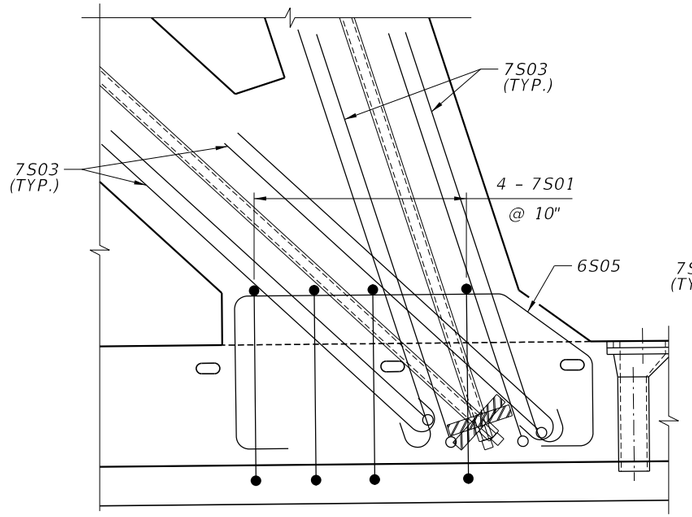

TRUSS MEMBERS 19 & 20
CONNECTION DETAIL

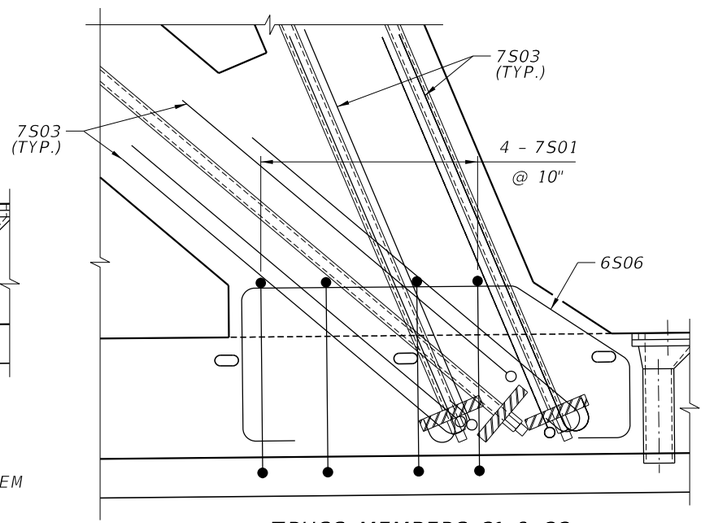

TRUSS MEMBERS 21 & 22
CONNECTION DETAIL

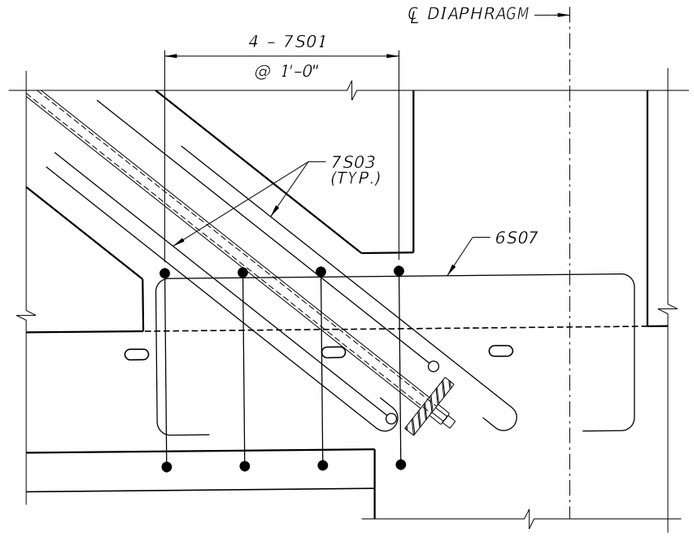

TRUSS MEMBERS 23 & 24
CONNECTION DETAIL

NOTES:

1. FOR ADDITIONAL BACK SPAN DETAILS, SEE BACK SPAN TRUSS SYSTEM P.T. BAR DETAILS DRAWING.
2. FOR TYPE III DIAPHRAGM DETAILS, SEE DECK END DIAPHRAGM REINFORCEMENT - TYPE III DRAWING.
3. FOR TYPE IV DIAPHRAGM DETAILS, SEE DECK END DIAPHRAGM REINFORCEMENT - TYPE IV DRAWING.
4. FOR ADDITIONAL TRUSS DETAILS, SEE BACK SPAN TRUSS SYSTEM REINFORCEMENT DRAWINGS.
5. FOR ADDITIONAL DRAIN PIPE DETAILS, SEE DRAINAGE DETAILS DRAWING.
6. CONCRETE COVER IS 2" UNLESS NOTED OTHERWISE.
7. FOR BAR LIST, SEE SUPERSTRUCTURE REINFORCEMENT BAR LIST.

FINAL SUBMITTAL - NOT FOR CONSTRUCTION - FEBRUARY 2017

REVISIONS

DATE	BY	DESCRIPTION	DATE	BY	DESCRIPTION

ENGINEER OF RECORD:
FIGG
424 North Calhoun Street
Tallahassee, Florida 32301
FLORIDA CERTIFICATE OF AUTHORIZATION NO. 5618
W. DENNEY PATE, P.E. - P.E. NO. 34332

DRAWN BY: DCB
CHECKED BY: EDL
DESIGNED BY: EDL
CHECKED BY: MF

FLORIDA INTERNATIONAL UNIVERSITY

ROAD NO.	COUNTY	PROJECT ID
	MIAMI-DADE	434688-1-58-01

SHEET TITLE: DECK REINFORCEMENT & P.T. - BACK SPAN (2 OF 2)

PROJECT NAME: UNIVERSITYCITY PROSPERITY PROJECT

SHEET NO. B-63

Plotted By: lcavanaugh 2/9/2017 2:54:38 PM G:\43468815801\struct\B1_63_BS_Deck_Reinf&PT_02.DGN

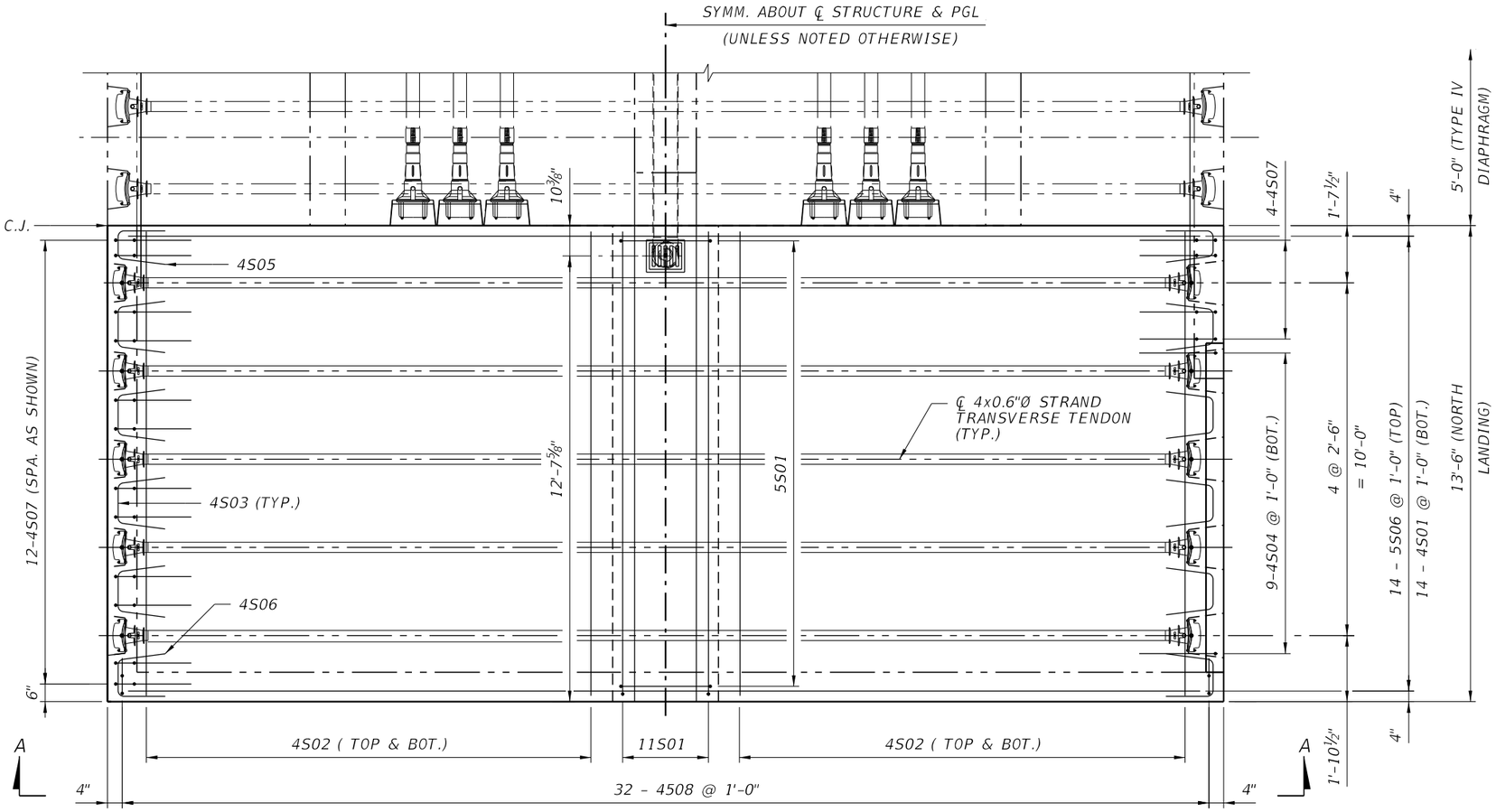

PLAN

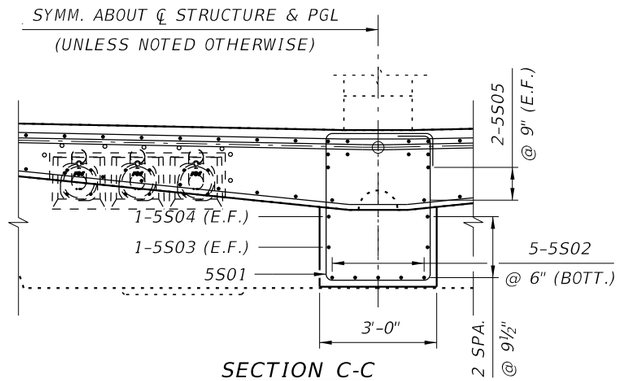

SECTION C-C
(LOOKING DOWNSTATION)

NOTES:

1. PLACE TWO ADDITIONAL 4S07/4S08 BARS PER FENCE POST. SEE MISSILE GUARD FENCE AND RAILING DETAIL SHEETS FOR POST SPACING AND BAR PLACEMENT.

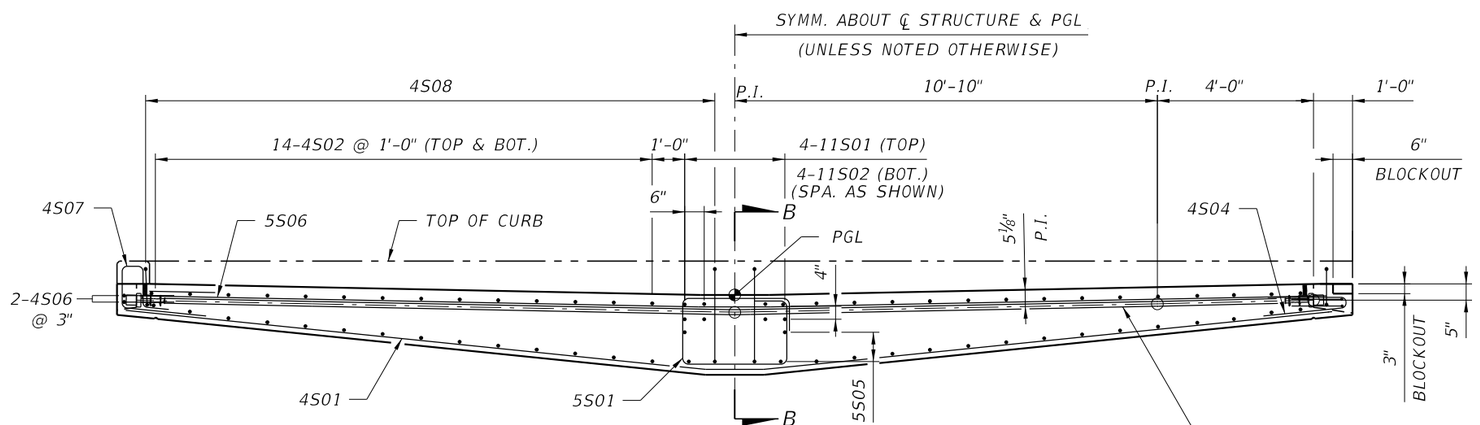

VIEW A-A
(LOOKING DOWNSTATION)

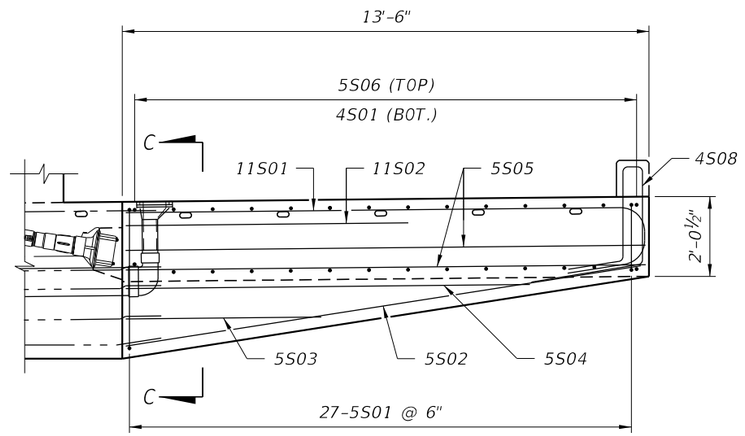

SECTION B-B

FINAL SUBMITTAL - NOT FOR CONSTRUCTION - FEBRUARY 2017

REVISIONS					
DATE	BY	DESCRIPTION	DATE	BY	DESCRIPTION

ENGINEER OF RECORD:
FIGG
424 North Calhoun Street
Tallahassee, Florida 32301
FLORIDA CERTIFICATE OF AUTHORIZATION NO. 5618
W. DENNEY PATE, P.E. - P.E. NO. 34332

DRAWN BY: SJF
CHECKED BY: EDL
DESIGNED BY: EDL
CHECKED BY: MF

FIU FLORIDA INTERNATIONAL UNIVERSITY

ROAD NO.	COUNTY	PROJECT ID
	MIAMI-DADE	434688-1-58-01

SHEET TITLE: DECK REINFORCEMENT & P.T. NORTH LANDING

PROJECT NAME: UNIVERSITYCITY PROSPERITY PROJECT

SHEET NO. B-64

$USER$ $DATE$ $TIME$ $FILE$

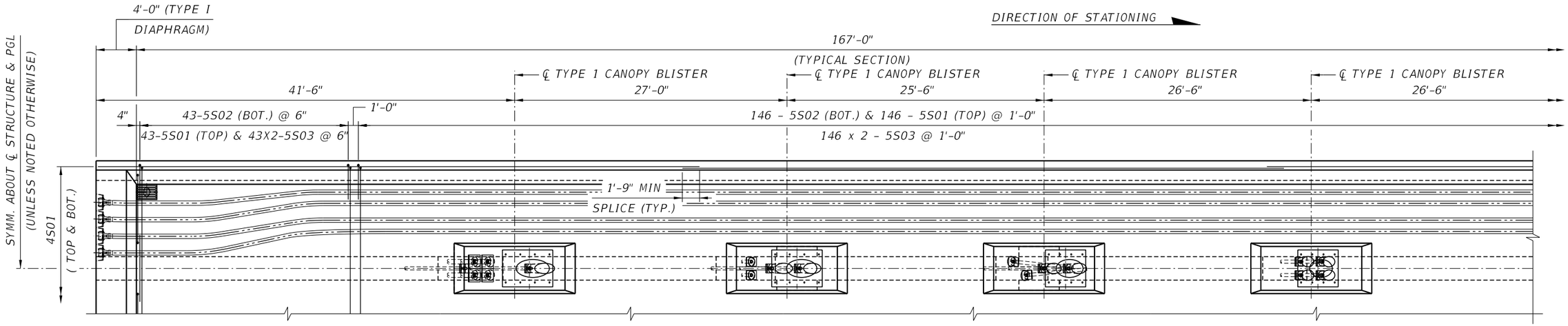

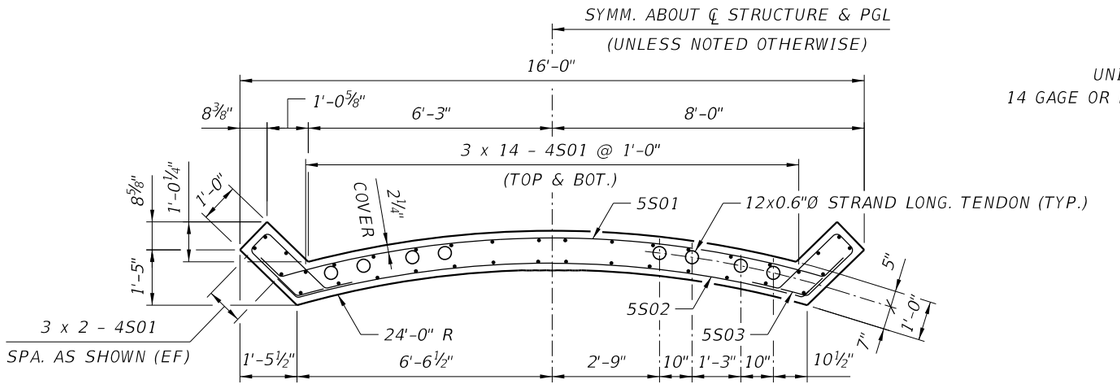

TYPICAL CROSS SECTION

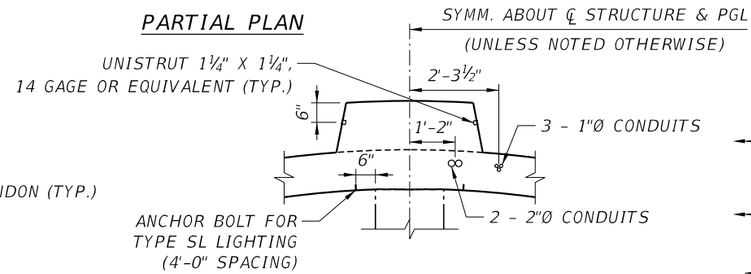

TYPICAL LIGHTING CONNECTION & ELECTRICAL CONDUIT DETAIL

(LOOKING UPSTATION)

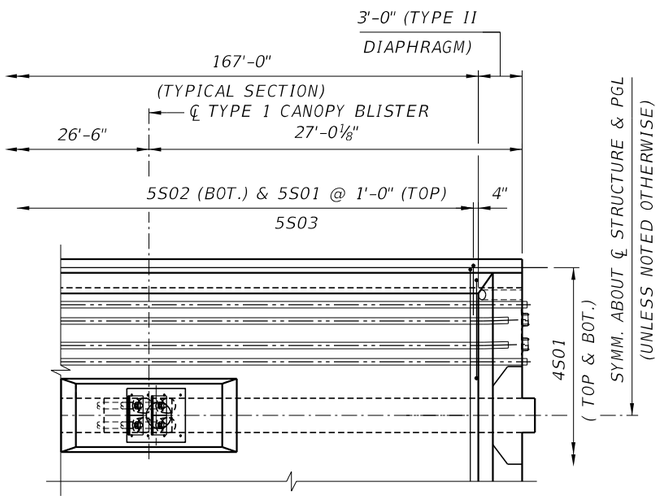

PARTIAL PLAN (CONT.)

(DISTORTED VERTICAL SCALE)

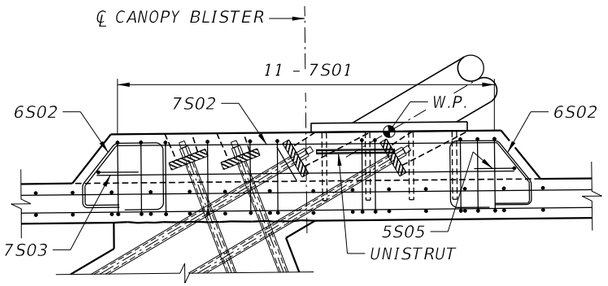

SECTION A-A

TYPE 1 CANOPY BLISTER

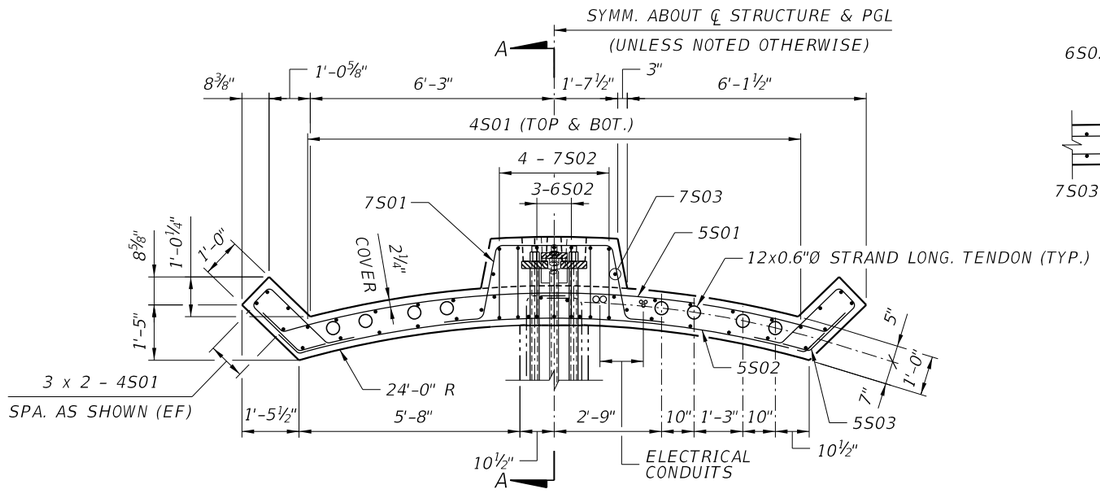

CROSS SECTION AT CANOPY BLISTERS

(LOOKING UPSTATION)

NOTES:

1. FOR ADDITIONAL MAIN SPAN DETAILS, SEE MAIN SPAN TRUSS SYSTEM LAYOUT DRAWING.
2. FOR TYPE I DIAPHRAGM DETAILS, SEE CANOPY END DIAPHRAGM REINFORCEMENT - TYPE I DRAWING.
3. FOR TYPE II DIAPHRAGM DETAILS, SEE CANOPY END DIAPHRAGM REINFORCEMENT - TYPE II DRAWING.
4. FOR ADDITIONAL TRUSS DETAILS, SEE MAIN SPAN TRUSS SYSTEM DETAIL DRAWING.
5. FOR ADDITIONAL DRAIN PIPE DETAILS, SEE DRAINAGE DETAILS DRAWING.
6. CONCRETE COVER IS 2" UNLESS NOTED OTHERWISE.
7. FOR BAR LIST, SEE SUPERSTRUCTURE REINFORCEMENT BAR LIST DRAWING.
8. THE UNISTRUT SHALL BE PROJECTED ¼" FROM FACE OF BLISTER. THE UNISTRUT LENGTH IS EQUAL TO 2'-0".

FINAL SUBMITTAL - NOT FOR CONSTRUCTION - FEBRUARY 2017

REVISIONS					
DATE	BY	DESCRIPTION	DATE	BY	DESCRIPTION

ENGINEER OF RECORD:
FIGG
424 North Calhoun Street
Tallahassee, Florida 32301
FLORIDA CERTIFICATE OF AUTHORIZATION NO. 5618
W. DENNEY PATE, P.E. - P.E. NO. 34332

DRAWN BY:	CHECKED BY:	DESIGNED BY:	CHECKED BY:
DCB	EDL	EDL	MF

FIU FLORIDA INTERNATIONAL UNIVERSITY

ROAD NO.	COUNTY	PROJECT ID
	MIAMI-DADE	434688-1-58-01

SHEET TITLE: CANOPY REINFORCEMENT & P.T. - MAIN SPAN

PROJECT NAME: UNIVERSITYCITY PROSPERITY PROJECT

SHEET NO. B-65

Plotted By: lcavanaugh 2/9/2017 2:54:39 PM G:\43468815801\struct\B1_65_MS_Canopy_Reinf&PT.DGN

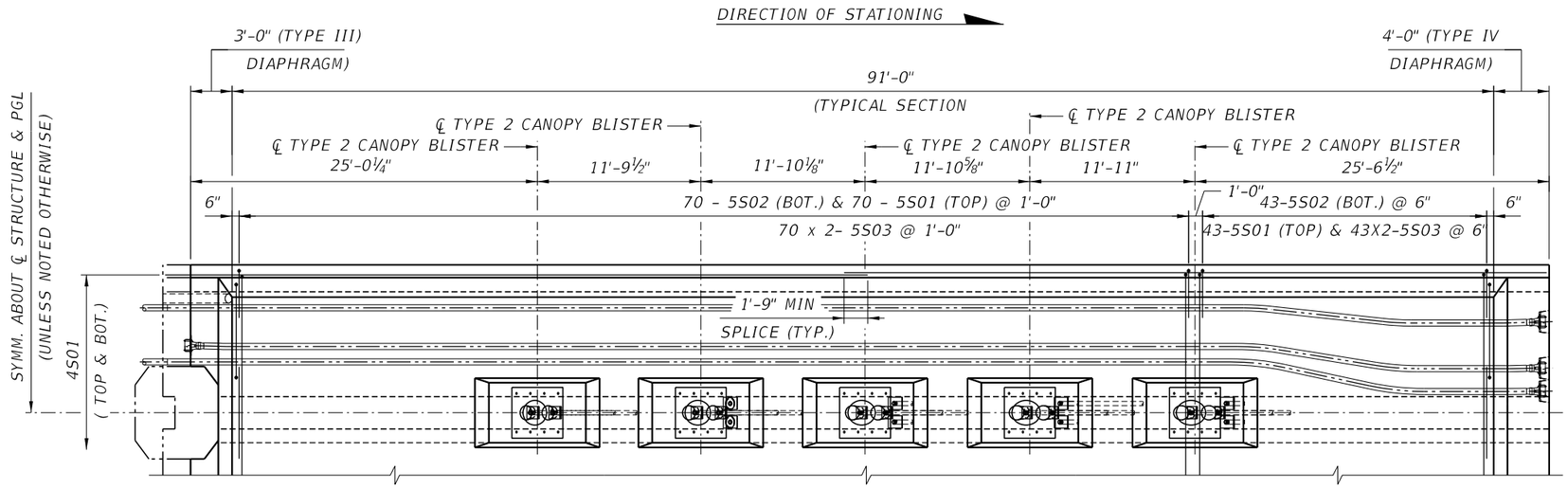

PARTIAL PLAN

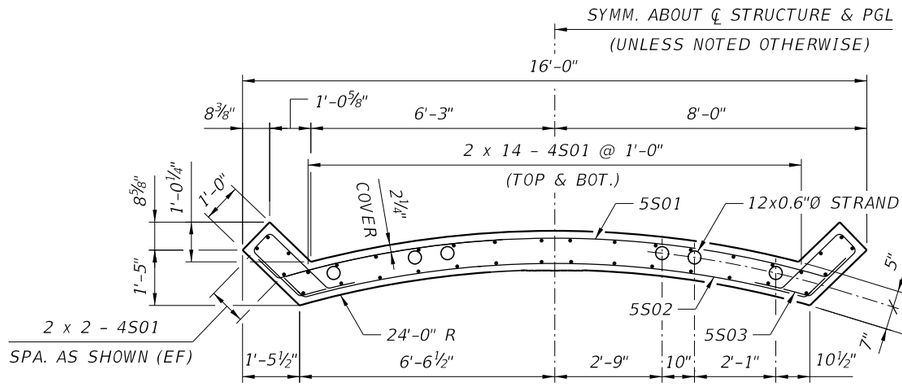

TYPICAL CROSS SECTION

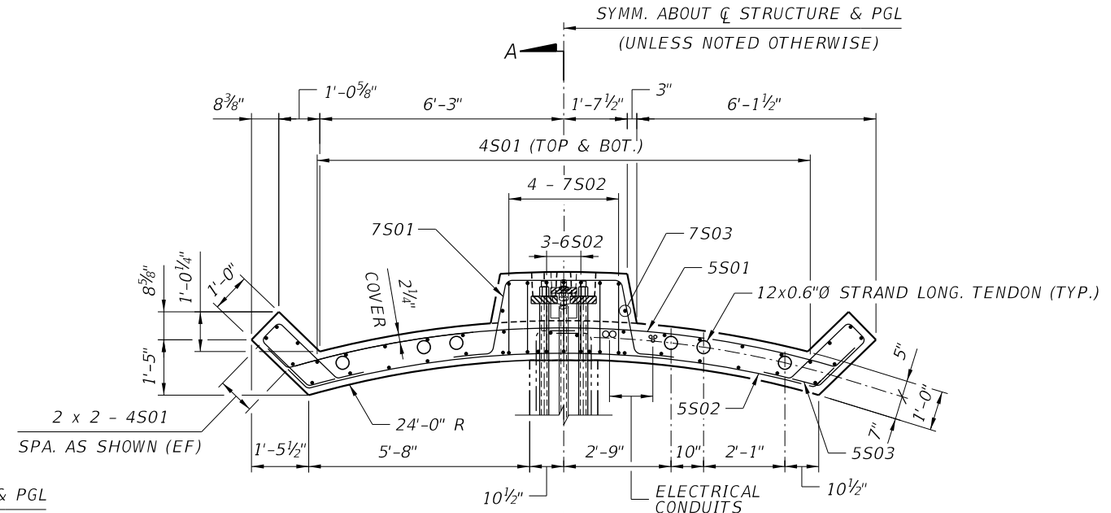

CROSS SECTION AT CANOPY BLISTERS

(LOOKING UPSTATION)

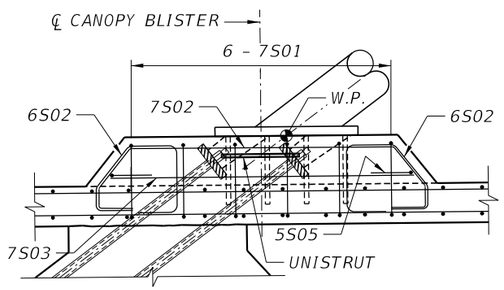

SECTION A-A

TYPE 2 CANOPY BLISTER

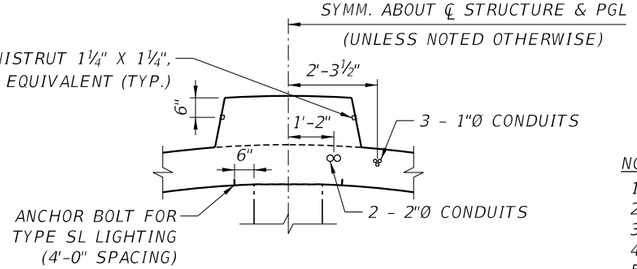

TYPICAL LIGHTING CONNECTION & ELECTRICAL CONDUIT DETAIL

(LOOKING UPSTATION)

NOTES:

1. FOR ADDITIONAL BACK SPAN DETAILS, SEE BACK SPAN TRUSS SYSTEM LAYOUT DRAWING.
2. FOR TYPE III DIAPHRAGM DETAILS, SEE CANOPY END DIAPHRAGM REINFORCEMENT - TYPE III DRAWING.
3. FOR TYPE IV DIAPHRAGM DETAILS, SEE CANOPY END DIAPHRAGM REINFORCEMENT - TYPE IV DRAWING.
4. FOR ADDITIONAL TRUSS DETAILS, SEE BACK SPAN TRUSS SYSTEM DETAIL DRAWING.
5. FOR ADDITIONAL DRAIN PIPE DETAILS, SEE DRAINAGE DETAILS DRAWING.
6. CONCRETE COVER IS 2" UNLESS NOTED OTHERWISE.
7. FOR BAR LIST, SEE SUPERSTRUCTURE REINFORCEMENT BAR LIST DRAWING.
8. THE UNISTRUT SHALL BE PROJECTED ¼" FROM FACE OF BLISTER. THE UNISTRUT LENGTH IS EQUAL TO 2'-0".

FINAL SUBMITTAL - NOT FOR CONSTRUCTION - FEBRUARY 2017

REVISIONS

DATE	BY	DESCRIPTION	DATE	BY	DESCRIPTION

ENGINEER OF RECORD:
FIGG
424 North Calhoun Street
Tallahassee, Florida 32301
FLORIDA CERTIFICATE OF AUTHORIZATION NO. 5618
W. DENNEY PATE, P.E. - P.E. NO. 34332

DRAWN BY:	CHECKED BY:	DESIGNED BY:	CHECKED BY:
DCB	EDL	EDL	MF

FIU FLORIDA INTERNATIONAL UNIVERSITY

ROAD NO.	COUNTY	PROJECT ID
	MIAMI-DADE	434688-1-58-01

SHEET TITLE: CANOPY REINFORCEMENT & P.T. - BACK SPAN

PROJECT NAME: UNIVERSITYCITY PROSPERITY PROJECT

SHEET NO. B-66

Plotted By: lcavanaugh 2/9/2017 2:54:40 PM G:\43468815801\struct\B1_66_BS_Canopy_Reinf&PT.DGN

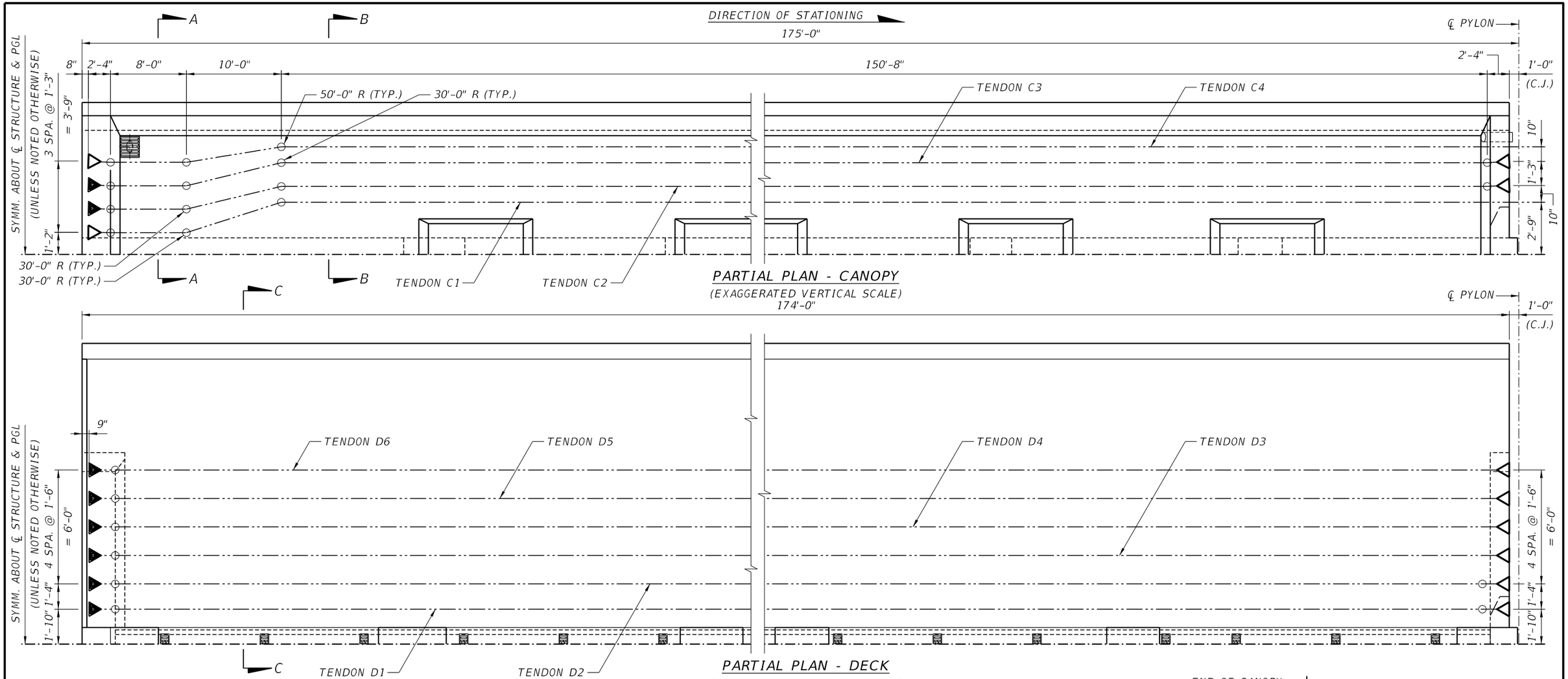

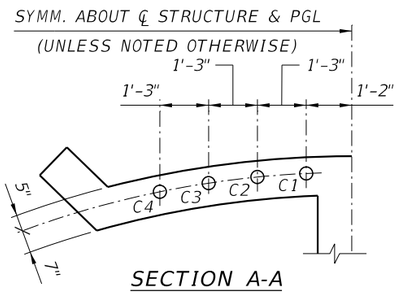

SECTION A-A

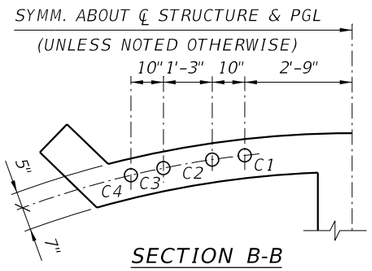

SECTION B-B

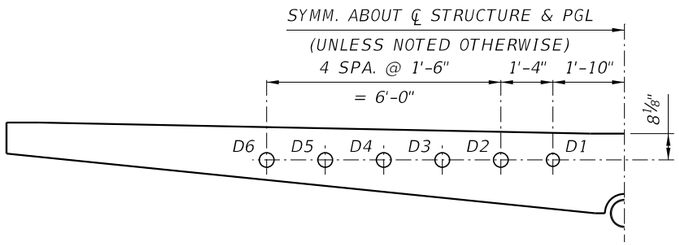

SECTION C-C

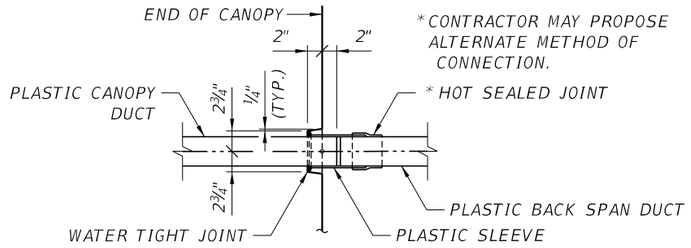

CANOPY TENDON CONNECTION DETAIL

(TYPICAL TENDONS C1 AND C4)

LEGEND:

- ▶ — REPRESENTS STRESSING END ANCHOR.
- ▷ — REPRESENTS NON-STRESSING END ANCHOR.

NOTES:

1. TENDONS D2 THRU D6 ARE 19x0.6"ø STRAND TENDONS.
2. TENDONS D1 AND C1 THRU C4 ARE 12x0.6"ø STRAND TENDONS.
3. FOR ADDITIONAL TENDON DEVIATION DETAILS AT DECK END DIAPHRAGM – TYPE I, SEE DECK END DIAPHRAGM DIMENSIONS AND P.T. – TYPE I DRAWING.
4. FOR ADDITIONAL TENDON DEVIATION DETAILS AT DECK END DIAPHRAGM – TYPE II, SEE DECK END DIAPHRAGM DIMENSIONS AND P.T. – TYPE II DRAWING.
5. FOR ADDITIONAL TENDON DEVIATION DETAILS AT CANOPY END DIAPHRAGM – TYPE I, SEE CANOPY END DIAPHRAGM DIMENSIONS AND P.T. – TYPE I DRAWING.
6. FOR ADDITIONAL TENDON DEVIATION DETAILS AT CANOPY END DIAPHRAGM – TYPE II, SEE CANOPY END DIAPHRAGM DIMENSIONS AND P.T. – TYPE II DRAWING.

FINAL SUBMITTAL – NOT FOR CONSTRUCTION – FEBRUARY 2017

REVISIONS

DATE	BY	DESCRIPTION	DATE	BY	DESCRIPTION

ENGINEER OF RECORD:
FIGG
424 North Calhoun Street
Tallahassee, Florida 32301
FLORIDA CERTIFICATE OF AUTHORIZATION NO. 5618
W. DENNEY PATE, P.E. - P.E. NO. 34332

DRAWN BY:	CHECKED BY:	DESIGNED BY:	CHECKED BY:
DCB	EDL	EDL	MF

FIU FLORIDA INTERNATIONAL UNIVERSITY

ROAD NO.	COUNTY	PROJECT ID
	MIAMI-DADE	434688-1-58-01

SHEET TITLE: LONGITUDINAL P.T. DETAILS (1 OF 2)

PROJECT NAME: UNIVERSITYCITY PROSPERITY PROJECT

SHEET NO. B-67

Plotted By: lcavanaugh 2/9/2017 2:54:41 PM G:\43468815801\struct\B1_67_Longitudinal_PT_Details_1.dgn

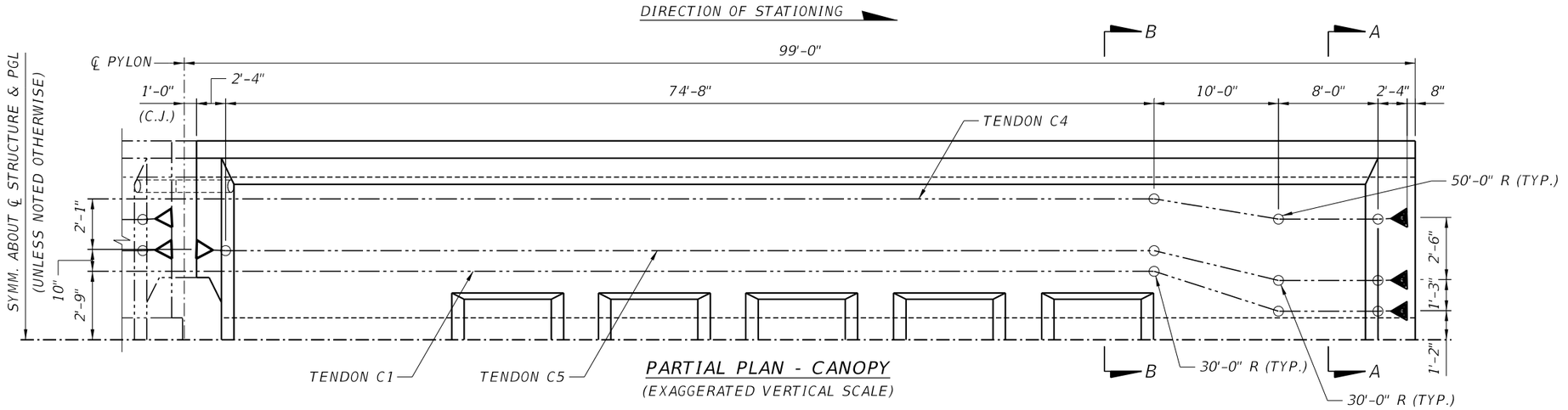

PARTIAL PLAN - CANOPY

(EXAGGERATED VERTICAL SCALE)

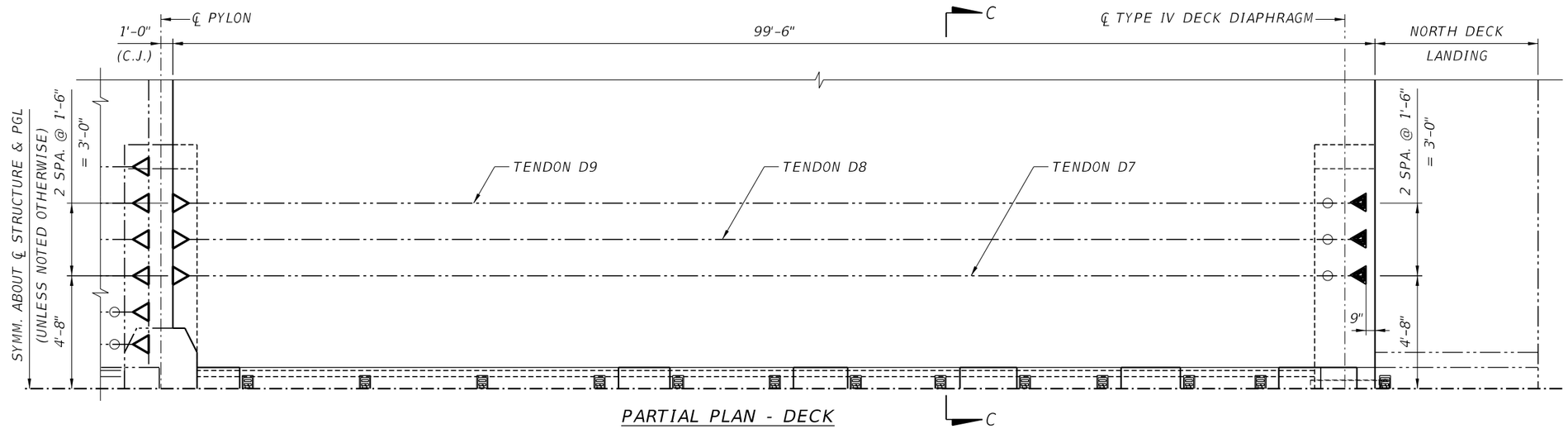

PARTIAL PLAN - DECK

(EXAGGERATED VERTICAL SCALE)

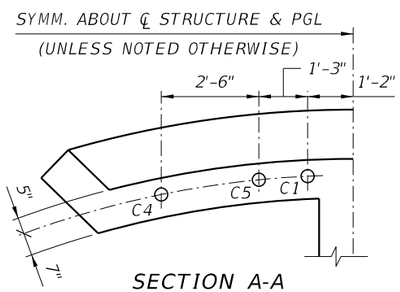

SECTION A-A

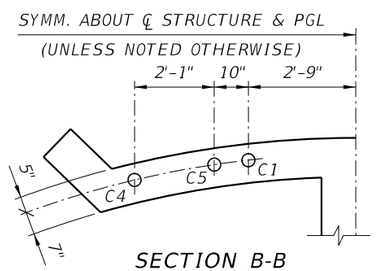

SECTION B-B

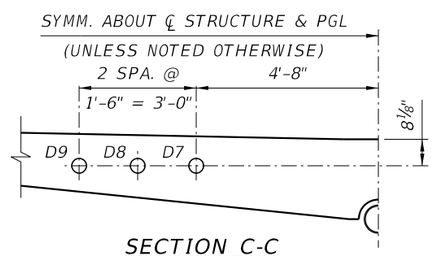

SECTION C-C

LEGEND:

- REPRESENTS STRESSING END ANCHOR.
- REPRESENTS NON-STRESSING END ANCHOR.

NOTES:

1. TENDONS D7 THRU D9 ARE 19x0.6"ø STRAND TENDONS.
2. TENDON C5 IS 12x0.6"ø STRAND TENDON.
3. FOR ADDITIONAL TENDON DEVIATION DETAILS AT DECK END DIAPHRAGM - TYPE III, SEE DECK END DIAPHRAGM DIMENSIONS AND P.T. - TYPE III DRAWING.
4. FOR ADDITIONAL TENDON DEVIATION DETAILS AT DECK END DIAPHRAGM - TYPE IV, SEE DECK END DIAPHRAGM DIMENSIONS AND P.T. - TYPE IV DRAWING.
5. FOR ADDITIONAL TENDON DEVIATION DETAILS AT CANOPY END DIAPHRAGM - TYPE III, SEE CANOPY END DIAPHRAGM DIMENSIONS AND P.T. - TYPE III DRAWING.
6. FOR ADDITIONAL TENDON DEVIATION DETAILS AT CANOPY END DIAPHRAGM - TYPE IV, SEE CANOPY END DIAPHRAGM DIMENSIONS AND P.T. - TYPE IV DRAWING.

FINAL SUBMITTAL - NOT FOR CONSTRUCTION - FEBRUARY 2017

REVISIONS					
DATE	BY	DESCRIPTION	DATE	BY	DESCRIPTION

ENGINEER OF RECORD:
FIGG
424 North Calhoun Street
Tallahassee, Florida 32301
FLORIDA CERTIFICATE OF AUTHORIZATION NO. 5618
W. DENNEY PATE, P.E. - P.E. NO. 34332

DRAWN BY:	DCB
CHECKED BY:	EDL
DESIGNED BY:	EDL
CHECKED BY:	MF

FIU FLORIDA INTERNATIONAL UNIVERSITY

ROAD NO.	COUNTY	PROJECT ID
	MIAMI-DADE	434688-1-58-01

SHEET TITLE: LONGITUDINAL P.T. DETAILS (2 OF 2)

PROJECT NAME: UNIVERSITYCITY PROSPERITY PROJECT

SHEET NO. B-68

Plotted By: lcavanaugh 2/9/2017 2:54:42 PM G:\43468815801\struct\B1_68_Longitudinal_PT_Details_II.dgn

P.T. BAR / STRESSING / GROUTING / ANCHOR PROTECTION SCHEDULE

LOCATION	BAR DESIG.	NO. REQ.	BAR SIZE	BAR LENGTH (ft-in)	STRESSING FORCE / BAR (kips)	LIVE END FORCE AFTER ANCHOR SET (kips)	DEAD END FORCE AFTER ANCHOR SET (kips)	*** STRESSING END	ELONGATION (in)	* TENDON PROFILE	** ANCHOR PROTECTION TYPE	
											UP STA.	DOWN STA.
2	A	1	1-1¾"	42'-11"	280	280	280	DOWSTATION	1.66	12	N/A	9
	B	1	1-1¾"	42'-9"	280	280	280	UPSTATION	1.81	12	9	N/A
3	A	4	1-1¾"	18'-1"	280	280	280	UPSTATION	0.76	12	9	N/A
5	A	2	1-1⅜"	17'-6"	166	166	166	UPSTATION	0.74	12	9	N/A
6	A	2	1-1¾"	34'-9¾"	280	280	280	UPSTATION	1.47	12	9	N/A
7	A	1	1-1¾"	18'-4"	280	280	280	UPSTATION	0.77	12	9	N/A
8	A	4	1-1¾"	29'-0¾"	280	280	280	UPSTATION	1.22	12	9	N/A
10	A	4	1-2½"	22'-0"	389	389	389	UPSTATION	0.66	12	9	N/A
11	A	1	1-1¾"	33'-0"	280	280	280	UPSTATION	1.39	12	9	N/A
	B	1	1-1¾"	33'-2¼"	280	280	280	UPSTATION	1.40	12	9	N/A
15	A	4	1-1¾"	21'-11¾"	240	240	240	UPSTATION	0.79	12	9	N/A
16	A	1	1-1⅜"	17'-6"	142	142	142	UPSTATION	0.63	12	9	N/A
17	A	4	1-1⅜"	24'-4"	166	166	166	UPSTATION	1.02	12	9	N/A
18	A	1	1-1⅜"	17'-9¾"	119	119	119	UPSTATION	0.54	12	9	N/A
19	A	2	1-1⅜"	25'-10½"	166	166	166	UPSTATION	1.09	12	9	N/A
20	A	1	1-1⅜"	18'-4½"	142	142	142	UPSTATION	0.66	12	9	N/A
21	A	2	1-1⅜"	27'-1¼"	119	119	119	UPSTATION	0.82	12	9	N/A
22	A	2	1-1⅜"	18'-11¼"	166	166	166	UPSTATION	0.80	12	9	N/A
23	A	2	1-1⅜"	28'-1"	119	119	119	UPSTATION	0.85	12	9	N/A

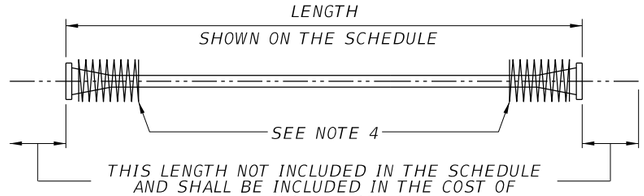

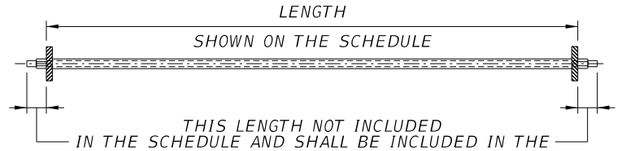

LONGITUDINAL TENDON / STRESSING / GROUTING / ANCHOR PROTECTION SCHEDULE

LOCATION	TENDON DESIG.	NO. REQ.	TENDON SIZE	TENDON LENGTH (ft-in)	STRESSING FORCE / TENDON (kips)	LIVE END FORCE AFTER ANCHOR SET (kips)	DEAD END FORCE AFTER ANCHOR SET (kips)	*** STRESSING END	ELONGATION (in)		* TENDON PROFILE	** ANCHOR PROTECTION TYPE	
									BEFORE ANCHOR SET	AFTER ANCHOR SET		UP STA.	DOWN STA.
MAIN SPAN DECK	D1	2	12 X 0.6"	173'-4¼"	527	471	489	DOWNSTATION	14.23	13.86	12	2	1
	D2	2	19 X 0.6"	173'-4¼"	835	745	775	DOWNSTATION	14.23	13.86	12	2	1
	D3	2	19 X 0.6"	173'-4¼"	835	745	775	DOWNSTATION	14.23	13.86	12	2	1
	D4	2	19 X 0.6"	173'-4¼"	835	745	775	DOWNSTATION	14.23	13.86	12	2	1
	D5	2	19 X 0.6"	173'-4¼"	835	745	775	DOWNSTATION	14.23	13.86	12	2	1
	D6	2	19 X 0.6"	173'-4¼"	835	745	775	DOWNSTATION	14.23	13.86	12	2	1
BACK SPAN DECK	D7	2	19 X 0.6"	98'-10¾"	828	712	768	UPSTATION	8.00	7.62	12	2	2
	D8	2	19 X 0.6"	98'-10¾"	828	712	768	UPSTATION	8.00	7.62	12	2	2
	D9	2	19 X 0.6"	98'-10¾"	828	712	768	UPSTATION	8.00	7.62	12	2	2
MAIN SPAN CANOPY	C2	2	12 X 0.6"	173'-5¼"	531	426	459	DOWNSTATION	13.63	13.26	12	2	1
	C3	2	12 X 0.6"	173'-5¼"	534	429	463	DOWNSTATION	13.73	13.35	12	2	1
BACK SPAN - CANOPY	C5	2	12 X 0.6"	97'-5¼"	519	417	459	UPSTATION	7.59	7.22	12	1	2
MAIN SPAN & BACK SPAN CANOPY	C1	2	12 X 0.6"	272'-11½"	556	430	433	UPSTATION	21.74	21.36	12	1	1
	C4	2	12 X 0.6"	272'-9¼"	556	463	465	UPSTATION	22.53	22.16	12	1	1

TRANSVERSE TENDON / STRESSING / GROUTING / ANCHOR PROTECTION SCHEDULE

LOCATION	TENDON DESIG.	NO. REQ.	TENDON SIZE	TENDON LENGTH (ft-in)	STRESSING FORCE / TENDON (kips)	LIVE END FORCE AFTER ANCHOR SET (kips)	DEAD END FORCE AFTER ANCHOR SET (kips)	*** STRESSING END	ELONGATION (in)		* TENDON PROFILE	** ANCHOR PROTECTION TYPE	
									BEFORE ANCHOR SET	AFTER ANCHOR SET		UP STA.	DOWN STA.
MAIN SPAN	-	65	4X0.6"	30'-8"	187	157	162	ALTERNATE	2.76	2.39	12	7	7
CLOSURE	-	1	4X0.6"	30'-8"	187	157	162	ALTERNATE	2.76	2.39	12	7	7
BACK SPAN	-	40	4X0.6"	30'-8"	187	157	162	ALTERNATE	2.76	2.39	12	7	7
NORTH LANDING	-	5	4X0.6"	30'-2"	187	157	161	ALTERNATE	2.71	2.34	12	7	7

NOTES:

1. ALL LONGITUDINAL POST-TENSIONING TENDONS SHALL BE SINGLE END STRESSED FROM THE STRESSING END, AS DESIGNATED IN THE LONGITUDINAL POST-TENSIONING DETAILS DRAWINGS.
2. TABULATED LENGTHS ARE MEASURED FROM ANCHOR PLATE TO ANCHOR PLATE. ADDITIONAL STRAND BEYOND THE PLATES FOR JACKING AND THE WEIGHT OF ANY ANCHORAGE HARDWARE IS NOT INCLUDED.
3. FORCES, STRESSES, AND ELONGATIONS ARE BASED ON THE TENDON STRESSING ENDS AS SHOWN ON THE LONGITUDINAL PT LAYOUT SHEETS. IF THE STRESSING ENDS ARE DIFFERENT THAN SHOWN, THE FORCES, STRESSES, AND ELONGATION MUST BE ADJUSTED.
4. SPIRALS SHOWN ARE FOR ILLUSTRATIVE PURPOSES ONLY. LOCAL ZONE REINFORCEMENT SHALL BE DESIGNED BY THE POST-TENSIONING SUPPLIER IN A MANNER THAT AVOIDS CONFLICTS WITH PT BARS, TRANSVERSE TENDONS AND MILD REINFORCEMENT NEAR THE ANCHOR FACE.

* SEE POST-TENSIONING VERTICAL PROFILES, INDEX NO. 21801.

** SEE POST-TENSIONING ANCHORAGE PROTECTION, INDEX NO. 21802.

*** FOR VERTICAL TENDONS AND BARS, UPSTATION DENOTES TOP ANCHOR, DOWNSTATION DENOTES BOTTOM ANCHOR.

FINAL SUBMITTAL - NOT FOR CONSTRUCTION - FEBRUARY 2017

REVISIONS

DATE	BY	DESCRIPTION	DATE	BY	DESCRIPTION

ENGINEER OF RECORD:
FIGG
424 North Calhoun Street
Tallahassee, Florida 32301
FLORIDA CERTIFICATE OF AUTHORIZATION NO. 5618
W. DENNEY PATE, P.E. - P.E. NO. 34332

DRAWN BY: DCB
CHECKED BY: EDL
DESIGNED BY: EDL
CHECKED BY: MF

FIU FLORIDA INTERNATIONAL UNIVERSITY

ROAD NO.	COUNTY	PROJECT ID
	MIAMI-DADE	434688-1-58-01

SHEET TITLE: POST-TENSIONING SCHEDULE

PROJECT NAME: UNIVERSITYCITY PROSPERITY PROJECT

SHEET NO. B-69

Plotted By: lcavanaugh 2/9/2017 2:54:42 PM G:\43468815801\struct\B1_69_Post-Tensioning_Schedule.dgn