CAR 367

Incident Date/Time Information: **9/13/2021 @ 3:15 PM**
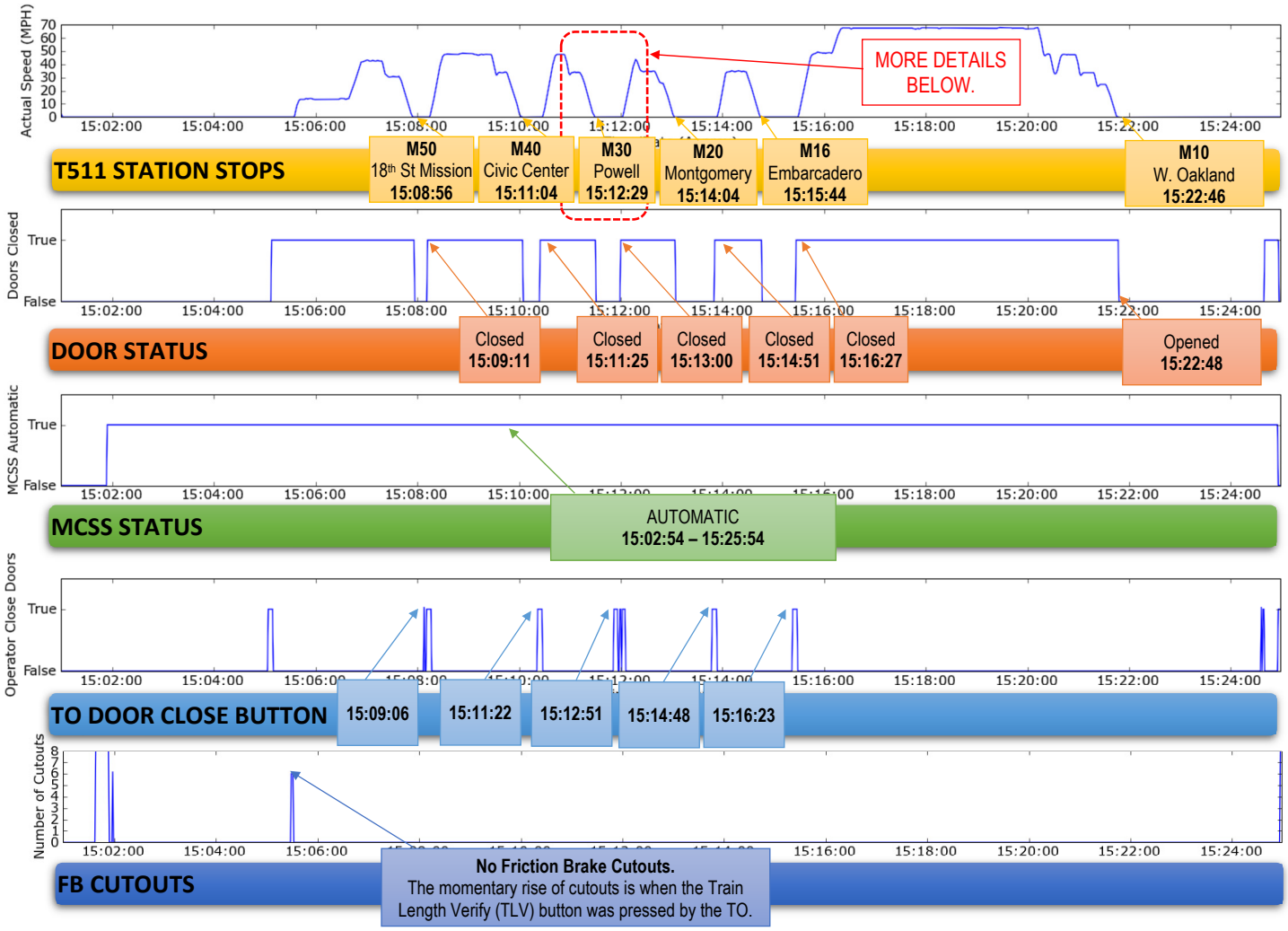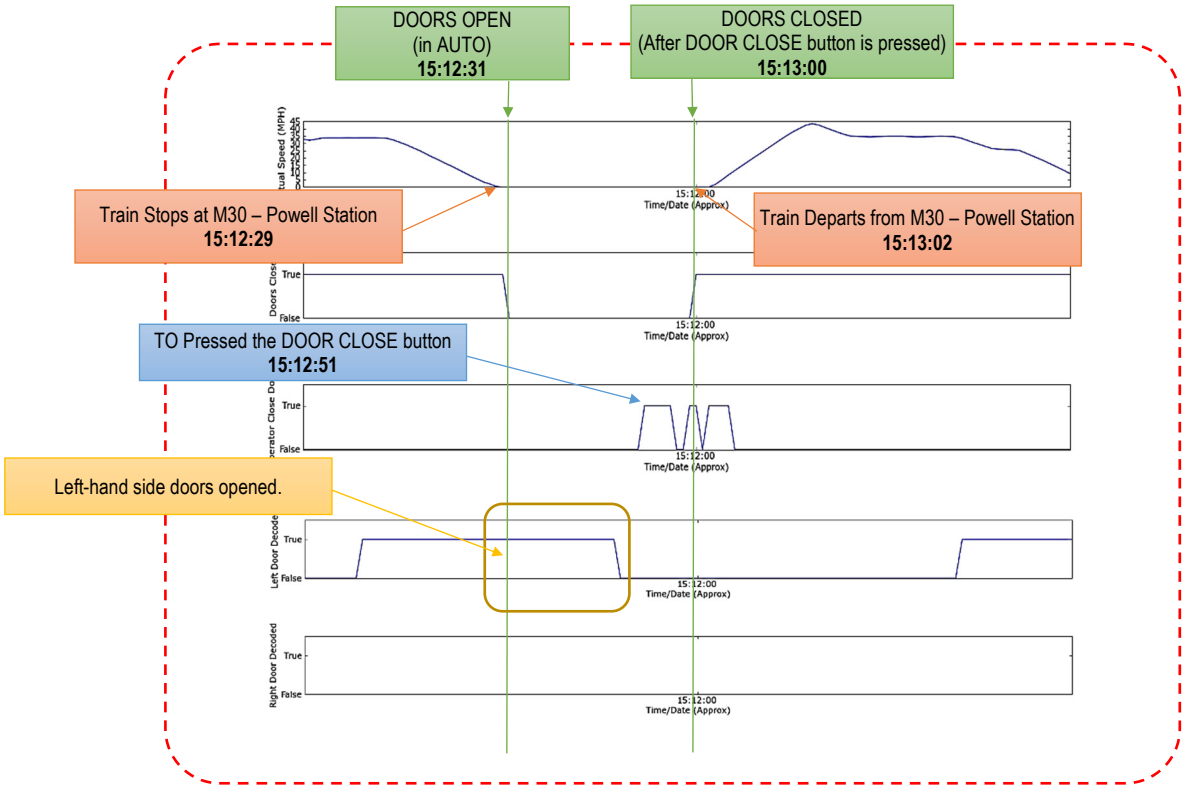
Note: ATP1 data log downloaded on 9/14/21. ATP1 time is about 1 minute behind PDT. **All time information shown below is adjusted to PDT.**