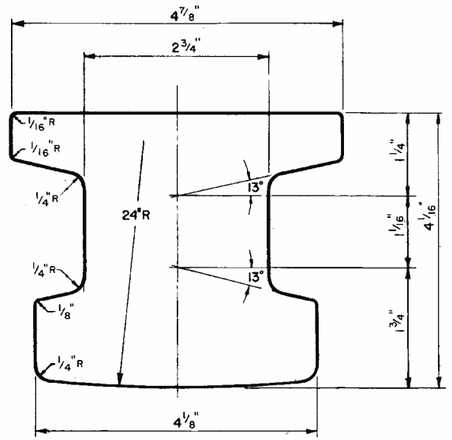

150 LB THIRD RAIL

SCALE: FULL SIZE

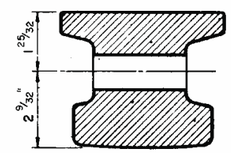

SECTION A

SCALE: 1/2"=1"

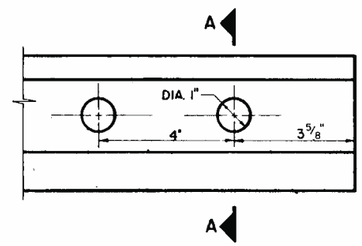

150 LB RAIL DRILLING

SCALE: 1/2"=1"

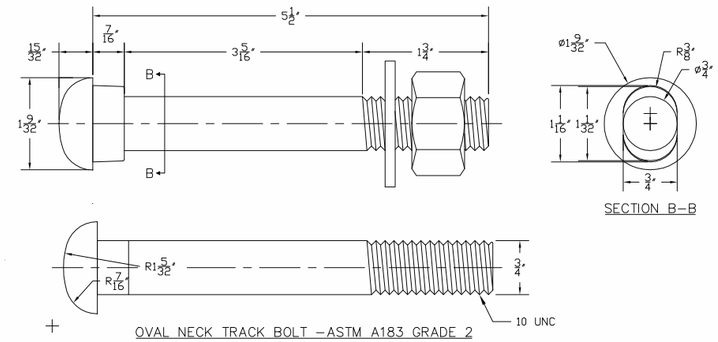

OVAL NECK TRACK BOLT –ASTM A183 GRADE 2
SCALE: FULL SIZE

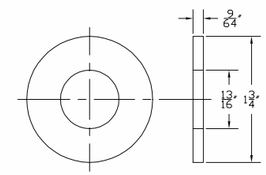

SPLICE PLATE WASHER ANSI/ASME B18.22.1
SCALE: FULL SIZE

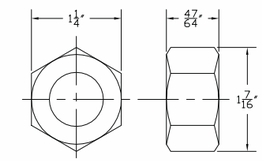

3/4" HEAVY HEX NUT–ASTM A183, GRADE 2
SCALE: FULL SIZE

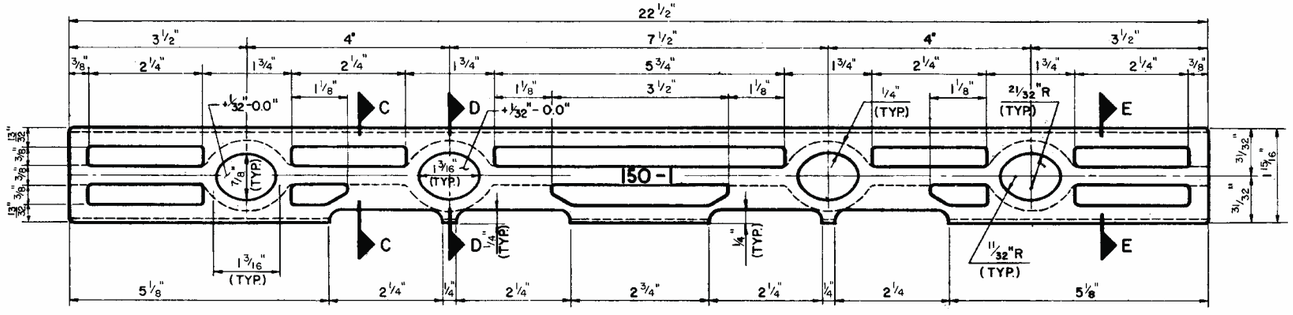

MATERIAL: CAST MALLEABLE IRON ASTM A-47, GRADE 35018
DIMENSION TOLERANCE: ± 1/32"

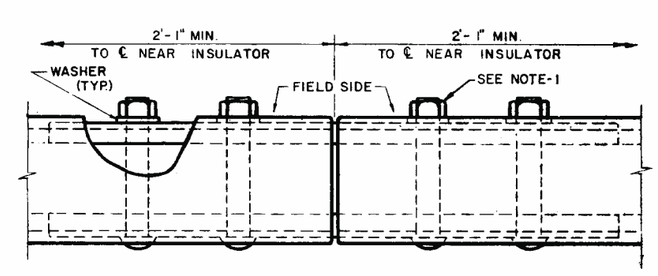

PLAN OF SPLICE ASSEMBLY

SCALE: 3/8"=1"

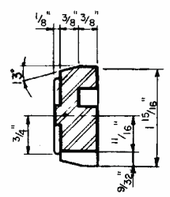

SECTION C

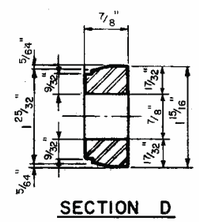

SECTION D

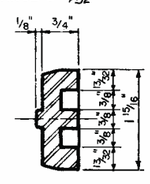

SECTION E

THIRD RAIL SPLICE PLATE

SCALE: 3/4" = 1"

NOTE:
1. TORQUE NUTS TO 12,500 IN.–POUNDS
2. THIRD RAIL REF. SPEC. NO. PD–801
3. SPLICE ASSEMBLY REF. SPEC. NO. PD–803

#	DATE	DESCRIPTION	#	DATE	DESCRIPTION
			1	07/21/2005	OVAL NECK TRACK BOLT & NUT.

[redacted] DIRECTOR POWER SYSTEMS
[redacted] SR. ENGINEER–POWER
[redacted] DESIGNER–POWER DESIGN

Metro-North Railroad
Power Department

150 LB THIRD RAIL
SPLICE PLATE AND SPLICE ASSEMBLY

DATE	2/26/2001
SCALE	NONE
SHEET	1 OF 1
DRAWING #	STD–301

POWER\SCAN\DR133

SCAN