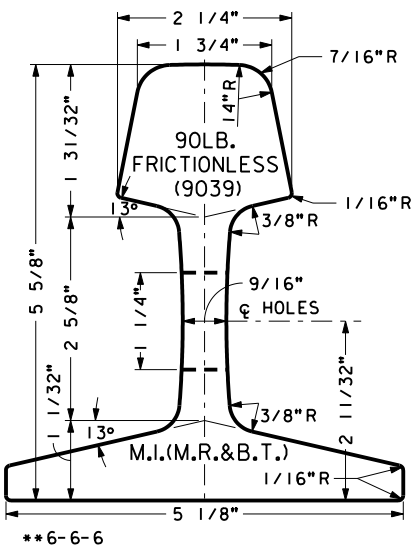

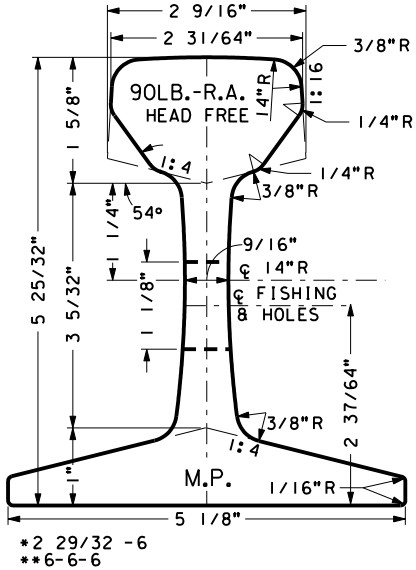

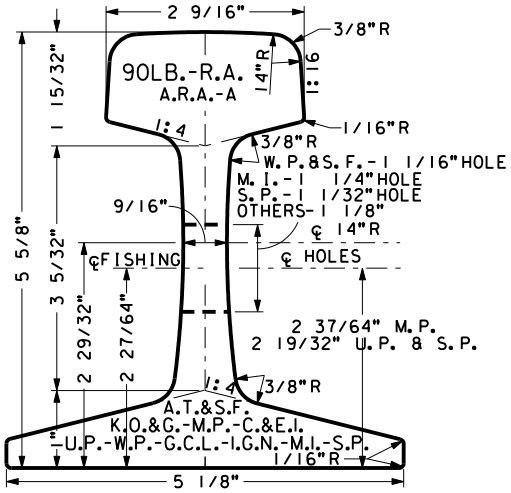

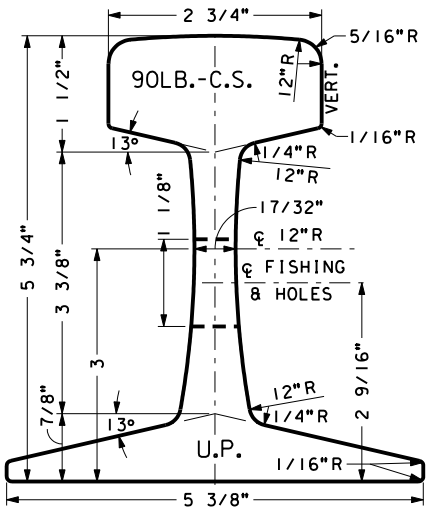

U.P. { *2 5/8 -5 1/2
**5 1/2 -5 3/8 -5 1/2
**5 1/2 -5 1/2 -5 1/2 }

M.P.
K.O.&G.
A.T.&S.F. { *2 13/32 -5
**5-5-5 }
W.P.

W.P. { *2 11/16 -5 1/2
S.P. **5 1/2 -5 1/2 -5 1/2 }

M.P. & { *2 29/32 -6
OTHERS **6-6-6 }

FOR MAINTENANCE ONLY

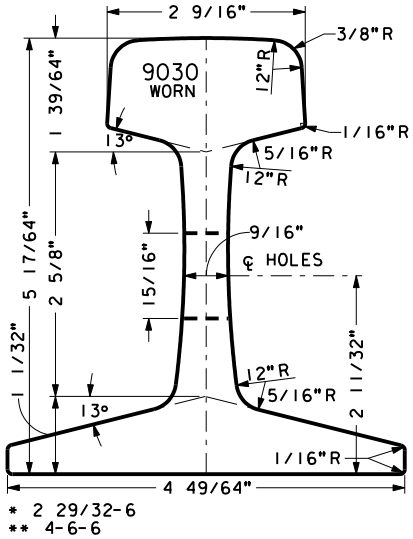

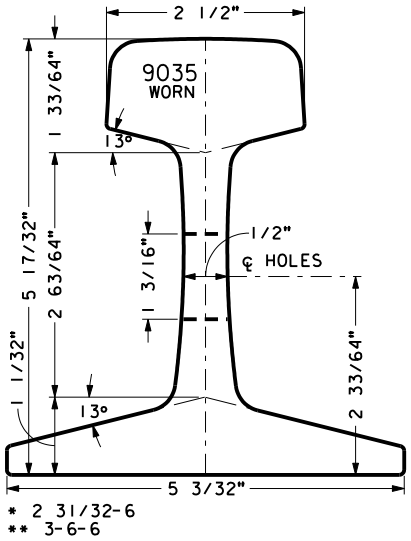

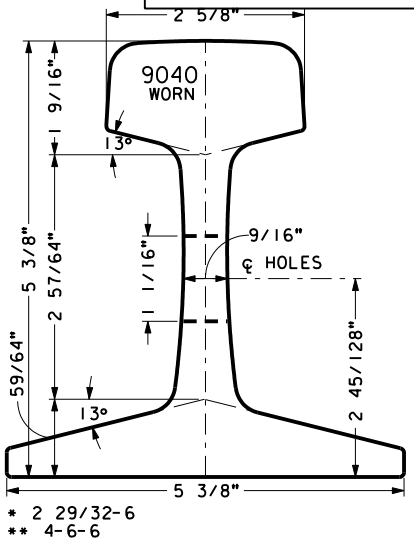

NOTES:
* INDICATES RAIL END DRILLING.

** INDICATES BAR PUNCHING.

REF PREVIOUS U.P. STD DWGS PAGES 1003-1005.

UNION PACIFIC RAILROAD
ENGINEERING STANDARDS

90 LB. RAIL SECTIONS

UNION PACIFIC

ADOPTED: MAY 26, 1988
REVISED: MARCH 1, 1998
FILE NO.: 0710

STD DWG
0710A

STD DWG
0710A

Copyright © 1996 by Union Pacific Railroad